CONSTRUCTION DRAWINGS FOR
COLLEGE OF MARIN ATHLETIC FACILITIES IMPROVEMENTS

835 COLLEGE AVE.
KENTFIELD, CA 94904
VERDE DESIGN, INC. PROJECT NO. 1702200

APPLICABLE CODES

1. 2016 CBC CHAPTER 35: PROVIDE ALL THE APPLICABLE/ADOPTED STANDARDS. WHERE A PARTICULAR STANDARD IS REFERENCED IN THE CODE BUT DOES NOT APPEAR AS AN ADOPTED STANDARD IT MAY STILL BE USED. APPLY ONLY THE PORTION OF THE STANDARD THAT IS APPLICABLE TO THE CODE SECTION WHERE THE STANDARD IS REFERENCED, NOT THE ENTIRE STANDARD.

   2016 BUILDING STANDARDS ADMINISTRATIVE CODE, PART 1, TITLE 24 C.C.R.
   2016 CALIFORNIA BUILDING CODE (CBC), PART 2, TITLE 24 C.C.R.
   (2015 INTERNATIONAL BUILDING CODE VOLUMES 1-2 AND 2015 CALIFORNIA AMENDMENTS)
   2016 CALIFORNIA ELECTRICAL CODE (CEC), PART 3, TITLE 24 C.C.R.
   (2014 NATIONAL ELECTRICAL CODE AND 2015 CALIFORNIA AMENDMENTS)
   2016 CALIFORNIA MECHANICAL CODE (CMC) PART 4, TITLE 24 C.C.R.
   (2015 UNIFORM MECHANICAL CODE AND 2015 CALIFORNIA AMENDMENTS)
   2016 CALIFORNIA PLUMBING CODE (CDC), PART 5, TITLE 24 C.C.R.
   (2015 UNIFORM PLUMBING CODE AND 2015 CALIFORNIA AMENDMENTS)
   2013 CALIFORNIA ENERGY CODE, PART 6, TITLE 24 C.C.R.
   2013 CALIFORNIA FIRE CODE, PART 9, TITLE 24 C.C.R.
   (2012 INTERNATIONAL FIRE CODE AND 2015 CALIFORNIA AMENDMENTS)
   2016 CALIFORNIA EXISTING BUILDING CODE, PART 10, TITLE 24 C.C.R.
   (2015 INTERNATIONAL EXISTING BUILDING CODE AND 2015 CALIFORNIA AMENDMENTS)
   2013 CALIFORNIA "GREEN" BUILDING REQUIREMENTS OR CAL GREEN, PART 11, TITLE 24 C.C.R.
   2016 CALIFORNIA REFERENCED STANDARDS, PART 12, TITLE 24 C.C.R.
   2013 TITLE 19 C.C.R., PUBLIC SAFETY, STATE FIRE MARSHAL REGULATIONS.

   LIST OF FEDERAL CODES AND STANDARDS (IF APPLICABLE)
   AMERICANS WITH DISABILITIES ACT (ADA), TITLE II OR TITLE III
   FOR TITLE II: UNIFORM FEDERAL ACCESSIBILITY STANDARDS (UFAS) — 28 CFR 35.151(c)
   OR ADA STANDARDS FOR ACCESSIBLE DESIGN (APPENDIX A OF 28 CFR PART 36)
   FOR TITLE III: ADA STANDARDS FOR ACCESSIBLE DESIGN (APPENDIX A OF 28 CFR PART 36) — 28 CFR 36.406
   2010 AMERICANS WITH DISABILITIES ACT (ADA) STANDARDS FOR ACCESSIBLE DESIGN

   NOTE: TITLE II APPLIES TO PROJECTS FUNDED AND/OR USED BY STATE AND LOCAL GOVERNMENT SERVICES. TITLE III COVERS PUBLIC ACCOMMODATIONS AND COMMERCIAL FACILITIES. DEPENDING ON THE USE AND FUNDING, BOTH TITLE MAY APPLY TO THE PROJECT.

NFPA 13	AUTOMATIC SPRINKLER SYSTEMS	2013 EDITION
NFPA 14	STANDPIPE SYSTEMS	2013 EDITION
NFPA 17	DRY CHEMICAL EXTINGUISHING SYSTEMS	2017 EDITION
NFPA 17A	WET CHEMICAL EXTINGUISHING SYSTEMS	2017 EDITION
NFPA 20	STATIONARY FIRE PUMPS	2016 EDITION
NFPA 24	PRIVATE FIRE SERVICE MAINS	2016 EDITION
NFPA 72	NATIONAL FIRE ALARM AND SIGNALING CODE (CALIFORNIA AMENDED) (NOTE SEE UL STANDARD 1971 FOR "VISUAL DEVICES)	2016 EDITION
NFPA 253	CRITICAL RADIANT FLUX OF FLOOR COVERING SYSTEMS	2015 EDITION
NFPA 2001	CLEAN AGENT FIRE EXTINGUISHING SYSTEMS	2015 EDITION
ASME 17.1	ELEVATOR STANDARD	2016 EDITION

   REFERENCE CODE SECTIONS FOR APPLICABLE STANDARDS - 2016 CALIFORNIA BUILDING CODE (FOR SFM) REFERENCED STANDARDS CHAPTER 35

   ADA STANDARD FOR ACCESSIBLE DESIGN (APPENDIX A OF 28 CFR PART 36)

2. THE INTENT OF THESE DRAWINGS AND SPECIFICATIONS IS THAT WORK OF THE ALTERATION, REHABILITATION OR RECONSTRUCTION IS TO BE IN ACCORDANCE WITH TITLE 24, CALIFORNIA CODE OF REGULATIONS. SHOULD ANY EXISTING CONDITIONS SUCH AS DETERIORATION OR NON-COMPLYING CONSTRUCTION BE DISCOVERED WHICH IS NOT COVERED BY THE CONTRACT DOCUMENTS WHEREIN THE FINISHED WORK WILL NOT COMPLY WITH TITLE 24, CALIFORNIA CODE OF REGULATIONS, A CHANGE ORDER, OR A SEPARATE SET OF PLANS AND SPECIFICATIONS, DETAILING AND SPECIFYING THE REQUIRED WORK SHALL BE SUBMITTED TO AND APPROVED BY THE OWNER REPRESENTATIVE BEFORE PROCEEDING WITH THE WORK.

3. ALL EXISTING FIRE EXTINGUISHING SYSTEMS ARE IN COMPLIANCE WITH UL 300, CBC 904.11, CFC 904.11.

GENERAL NOTES

1. PRIOR TO BIDDING, THE GENERAL CONTRACTOR SHALL VISIT & INSPECT THE SITE & FAMILIARIZE THEMSELVES WITH EXISTING CONDITIONS AFFECTING THE NEW WORK. THE GENERAL CONTRACTOR SHALL NOT DISPUTE, COMPLAIN OR ASSERT THAT THERE IS ANY MISUNDERSTANDING IN REGARDS TO LOCATION, EXTENT, NATURE OR AMOUNT OF WORK TO BE PERFORMED UNDER THIS CONTRACT DUE TO THE CONTRACTOR'S FAILURE TO INSPECT THE SITE. CONTRACTOR SHALL NOTIFY THE DISTRICT OF ANY CONDITIONS, REQUIRING WORK, WHICH ARE NOT COVERED IN THE CONTRACT DOCUMENTS.
2. NO CONSTRUCTION SHALL COMMENCE WITHOUT THE OFFICIAL NOTICE TO PROCEED FROM THE DISTRICT.
3. THE GENERAL CONTRACTOR & SUBCONTRACTORS ARE RESPONSIBLE FOR LOCATING & VERIFYING ALL EXISTING UNDERGROUND UTILITIES IN ALL AREAS OF NEW WORK PRIOR TO COMMENCEMENT OF EXCAVATION. EXISTING UTILITIES SHOWN ON THE DRAWINGS ARE APPROXIMATE ROUTING LOCATIONS AS BEST DETERMINED FROM EXISTING DRAWINGS AND THE DISTRICT, BUT SHOULD NOT BE CONSTRUED TO REPRESENT ALL OF THE EXISTING UNDERGROUND UTILITIES. THE CONTRACTOR SHALL POTHOLE ALL EXISTING UTILITIES THAT MAY BE AFFECTED BY NEW FACILITIES IN THIS CONTRACT. VERIFY ACTUAL LOCATION AND DEPTH OF UTILITIES, AND REPORT POTENTIAL CONFLICTS TO THE DISTRICT PRIOR TO EXCAVATING FOR NEW FACILITIES.
4. CONTRACTOR SHALL TAKE ALL NECESSARY STEPS TO PROTECT ALL EXISTING UTILITIES, WHETHER SHOWN OR NOT, IN THE CONTRACT DOCUMENTS. CONTRACTOR SHALL BE RESPONSIBLE FOR ALL DAMAGES TO EXISTING UTILITIES CAUSED BY ITS OPERATIONS.
5. THE CONTRACTOR SHALL PROTECT ALL EXISTING ITEMS WITHIN SITE IMPROVEMENTS. IT IS THE RESPONSIBILITY OF THE CONTRACTOR TO REPAIR ALL DAMAGED AREAS TO THEIR ORIGINAL CONDITION OR BETTER AT CONTRACTOR'S EXPENSE TO THE SATISFACTION OF THE DISTRICT.
6. DIMENSIONS AND LOCATIONS OF EXISTING FACILITIES ARE APPROXIMATE AND SHALL BE FIELD VERIFIED BY CONTRACTOR. ANY DISCREPANCIES SHALL BE IMMEDIATELY BROUGHT TO THE ATTENTION OF THE DISTRICT.
7. ALL WORK SHALL CONFORM TO THE LATEST EDITION OF THE CALIFORNIA BUILDING CODE, CALIFORNIA PLUMBING CODE, CALIFORNIA FIRE CODE AND ALL APPLICABLE STATE AND LOCAL CODES AND ORDINANCES, AS WELL AS ADAPTED STANDARDS.
8. ALL NOTES ARE FOR GENERAL REFERENCE IN CONJUNCTION WITH, AND AS A SUPPLEMENT TO, THE WRITTEN SPECIFICATIONS AND DETAILS ASSOCIATED WITH THE CONTRACT DOCUMENTS.
9. THIS DRAWING SET SHALL BE USED IN CONJUNCTION WITH THE CSI FORMAT SPECIFICATIONS PUBLISHED IN BOOK FORM. COMBINED, THEY ARE HEREIN REFERRED TO AS THE "CONTRACT DOCUMENTS".
10. DIMENSIONS ON WORKING DRAWINGS TAKE PRECEDENCE OVER MEASURED ELEMENTS. CONTRACTOR SHALL NOT SCALE DRAWINGS.
11. ALL TYPICAL DETAILS SHALL APPLY UNLESS NOTED OTHERWISE.
12. CONTRACTOR SHALL PROVIDE ADEQUATE DUST CONTROL AND KEEP MUD AND DEBRIS OFF THE PUBLIC RIGHT-OF-WAY AT ALL TIMES.
13. ALL TRENCHES AND EXCAVATIONS SHALL BE CONSTRUCTED IN STRICT COMPLIANCE WITH THE APPLICABLE SECTIONS OF CALIFORNIA AND FEDERAL O.S.H.A. REQUIREMENTS AND OTHER APPLICABLE SAFETY ORDINANCES. CONTRACTOR SHALL BEAR FULL RESPONSIBILITY FOR TRENCH SHORING DESIGN AND INSTALLATION.
14. ANY ALTERATIONS OF EXISTING FACILITIES TO ACCOMMODATE THE INSTALLATION OF NEW WORK SHALL BE REVIEWED BY THE DISTRICT PRIOR TO COMMENCING WORK.
15. CONTRACTOR SHALL COORDINATE ALL WORK TO AVOID DISTURBING STUDENTS OR TEACHERS DURING SCHOOL HOURS. ANY DISRUPTION OF THE UTILITIES MUST BE COORDINATED AND APPROVED BY THE DISTRICT AND INSPECTOR OF RECORD PRIOR TO COMMENCING WORK.
16. ALL TEMPORARY WORK SHALL BE CONSIDERED A PART OF THIS CONTRACT AND NO EXTRA CHARGES WILL BE ALLOWED. THIS SHALL INCLUDE MINOR ITEMS OF MATERIAL OR EQUIPMENT NECESSARY TO MEET THE REQUIREMENTS AND INTENT OF THE PROJECT.
17. THE PLANS AND SPECIFICATIONS DO NOT UNDERTAKE TO SHOW OR LIST EVERY ITEM TO BE PROVIDED, BUT RATHER TO DEFINE THE REQUIREMENTS FOR A FULL AND WORKING SYSTEM FROM THE STANDPOINT OF THE END USER. FOR THIS REASON, WHEN AN ITEM NOT SHOWN OR LISTED IS CLEARLY NECESSARY FOR PROPER CONTROL/OPERATION OF EQUIPMENT WHICH IS SHOWN OR LISTED, THE CONTRACTOR SHALL PROVIDE AN ITEM WHICH WILL ALLOW THE SYSTEM TO FUNCTION PROPERLY AT NO INCREASE IN PRICE.
18. ALL CONTRACTORS SHALL REMOVE TRASH AND DEBRIS STEMMING FROM THEIR WORK ON A DAILY BASIS. PROJECT SITE SHALL BE MAINTAINED IN A CLEAN AND ORDERLY CONDITION.
19. THE DETAILS REFLECT THE DESIGN INTENT FOR TYPICAL CONDITIONS. THE CONTRACTOR SHALL VERIFY ALL FIELD CONDITIONS AND SHALL INCLUDE, IN HIS SCOPE, THE COST FOR COMPLETE FINISHED INSTALLATIONS, INCLUDING ANOMALIES, OF ALL TRADES.
20. NO WORK SHALL COMMENCE WITH UNAPPROVED MATERIALS. ANY WORK DONE WITH UNAPPROVED MATERIALS AND EQUIPMENT IS AT THE CONTRACTOR'S RISK AND IS SUBJECT TO REJECTION AND REPLACEMENT. SEE SPECIFICATIONS FOR SUBMITTAL AND SUBSTITUTION REQUIREMENTS.
21. CONSTRUCTION MATERIALS STORED ON THE SITE SHALL BE PROPERLY STACKED AND PROTECTED SO AS TO PREVENT DAMAGE OR DETERIORATION UNTIL USED. FAILURE IN THIS REGARD MAY BE CAUSE FOR REJECTION OF MATERIAL AND/OR WORK.
22. ALL EQUIPMENT SHALL BE FABRICATED FROM FIELD VERIFIED DIMENSIONS AND APPROVED SHOP DRAWINGS. COORDINATE MECHANICAL, PLUMBING AND ELECTRICAL EQUIPMENT.
23. CONTRACTOR SHALL PERFORM THEIR CONSTRUCTION AND OPERATIONS IN A MANNER WHICH WILL NOT ALLOW HARMFUL POLLUTANTS TO ENTER THE STORM DRAIN SYSTEM. TO ENSURE COMPLIANCE, THE CONTRACTOR SHALL IMPLEMENT THE APPROPRIATE BEST MANAGEMENT PRACTICE (BMP) AS OUTLINED IN THE BROCHURES ENTITLED "BEST MANAGEMENT PRACTICE FOR THE CONSTRUCTION INDUSTRY" ISSUED BY THE CALIFORNIA STORM WATER QUALITY ASSOCIATION, NONPOINT SOURCE POLLUTION CONTROL PROGRAM, TO SUIT THE CONSTRUCTION SITE AND JOB CONDITION. THE CONTRACTOR SHALL PRESENT HIS PROPOSED BMP AT THE PRECONSTRUCTION MEETING FOR DISCUSSION AND APPROVAL.
24. CONTRACTOR SHALL PROVIDE TEMPORARY CONSTRUCTION FENCING PER CONTRACT DOCUMENTS TO SERVE LIMIT OF WORK AREAS. FENCING MAY BE ADJUSTED DURING CONSTRUCTION BASED ON CONSTRUCTION SEQUENCE OR THE DISTRICT'S DIRECTION.
25. OVERNIGHT PARKING OF CONSTRUCTION EQUIPMENT IN THE STREET RIGHT-OF-WAY SHALL NOT BE PERMITTED.

KEY MAP

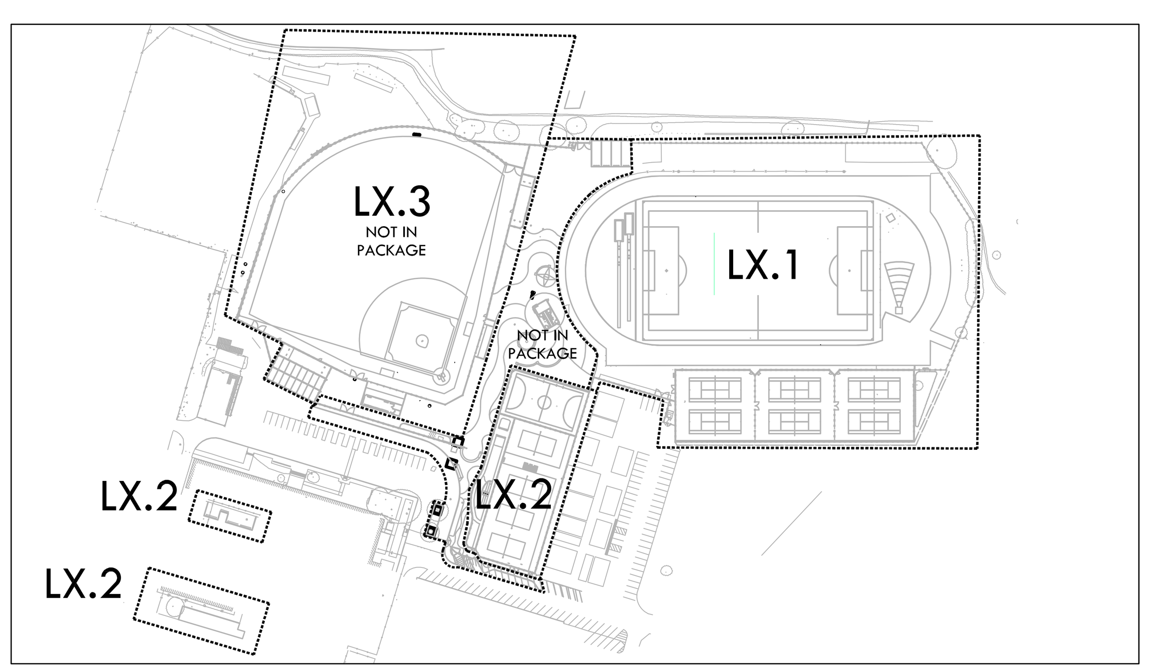

PREPARED BY

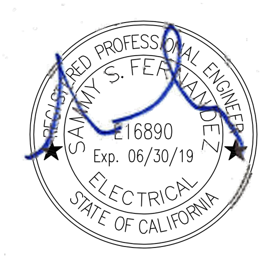

VERDE DESIGN
LANDSCAPE ARCHITECTURE
CIVIL ENGINEERING
SPORT PLANNING & DESIGN
2455 The Alameda
Santa Clara, CA 95050
tel: 408.985.7200
fax: 408.985.7260
www.VerdeDesignInc.com

American Consulting Engineers Electrical, Inc.
100 Saratoga Ave, Suite 200
Santa Clara, California 95125
Phone 408.236.2312
Fax 408.236.2316

SCOPE OF WORK

SOCCER/LACROSSE
SCOPE OF WORK TO INCLUDE, BUT NOT LIMITED TO, THE REPLACEMENT OF EXISTING NATURAL TURF FIELD WITH A NEW SYNTHETIC TURF FIELD AND INSTALLATION OF AN ALL-WEATHER SYNTHETIC TRACK SURFACE D-ZONE WITH NEW LONG JUMP/TRIPLE JUMP EVENTS (2). WORK TO ALSO INCLUDE IMPROVEMENTS TO EXISTING DRAINAGE, ELECTRICAL, AND IRRIGATION SYSTEM, AND REPLACEMENT OF EXISTING SCOREBOARD. EXISTING DISCUS AND SHOT PUT EVENTS TO REMAIN.

TENNIS COURTS
SCOPE OF WORK TO INCLUDE, BUT NOT LIMITED TO, REMOVAL OF EXISTING FIELD HOUSE AND GRAVEL STORAGE AREA AND INSTALLATION OF SIX (6) NEW TENNIS COURTS AND TENNIS COURT FACILITY, PERIMETER FENCING, GRAVEL PATHWAY, DRINKING FOUNTAIN, SITE FURNISHINGS, AND A NEW DRAINAGE SYSTEM.

SAND VOLLEYBALL/FUTSAL FIELD
SCOPE OF WORK TO INCLUDE, BUT NOT LIMITED TO, REMOVAL OF EXISTING TENNIS COURTS AND INSTALLATION OF NEW SAND VOLLEYBALL FACILITY AND SYNTHETIC TURF FUTSAL FIELD. WORK TO INCLUDE NEW CONCRETE BLEACHERS, PERIMETER FENCING, NEW UTILITY SYSTEMS, PLANTING, AND SITE FURNISHINGS.

BASEBALL FIELD (NOT IN PACKAGE)
SCOPE OF WORK TO INCLUDE, BUT NOT LIMITED TO, DEMOLITION/REMOVAL OF EXISTING NATURAL TURF FIELD, DUGOUTS, BACKSTOP AND BATTING CAGE AND REPLACE WITH NEW SYNTHETIC TURF FIELD, NEW CMU HOME AND VISITORS DUGOUTS, TEAM ROOM, BULLPENS, BATTING CAGE, BACKSTOP WITH SAFETY NETTING AND ALUMINUM BLEACHER SYSTEM. WORK TO ALSO INCLUDE NEW PERIMETER FENCING, BATTER'S EYE, 30 TALL SAFETY NETTING, STORAGE AREA, AND NEW SCOREBOARD. EXISTING DRAINAGE, IRRIGATION, AND OTHER UTILITY SYSTEMS TO BE IMPROVED AS WELL.

ENTRY/PLAZA/PERIMETER WORK (NOT IN PACKAGE)
SCOPE OF WORK TO INCLUDE, BUT NOT LIMITED TO, NEW PAVING, PLANTING, TICKET BOOTH, ENTRY SIGN, CONCESSION/RESTROOM BUILDING, STORAGE BUILDING, SEAT WALLS, RECONDITION OF EXISTING PAVING, AND NEW PERIMETER FENCING. WORK ALSO TO INCLUDING IMPROVEMENTS TO RECONFIGURING OF EXISTING PARKING ENTRY AND SPACES, AS WELL AS IMPROVEMENTS TO THE EXISTING DRAINAGE, IRRIGATION, AND OTHER UTILITY SYSTEMS.

PROJECT MAPS

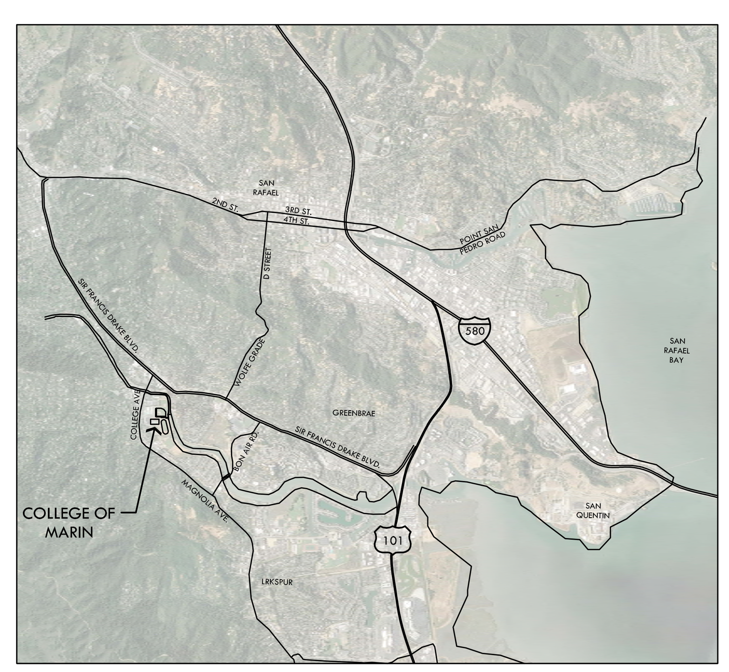

VICINITY MAP

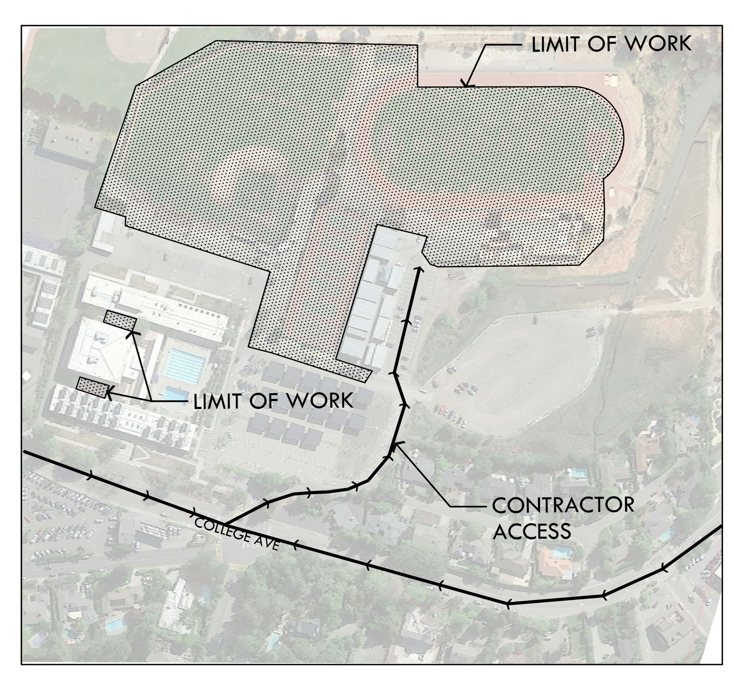

SITE MAP

CONTACT INFORMATION

ORGANIZATION	NAME	PHONE
DISTRICT		
COLLEGE OF MARIN	GREG NELSON	(415) 884-3100
CIVIL ENGINEER/ LANDSCAPE ARCHITECT		
VERDE DESIGN INC.	DEVIN CONWAY	(408) 850-3420
	WES DOWNING	(707) 800-4204
ELECTRICAL ENGINEER		
ACEE	SAMMY FERNANDEZ	(408) 236-2312

SHEET INDEX

SHEET NO.	SHEET DESCRIPTION
LANDSCAPE/CIVIL	
-	COVER SHEET
L0.0	ACCESSIBILITY PLAN - SITE (NOT IN PACKAGE)
L1.1	EXISTING CONDITIONS PLAN - SOCCER/LACROSSE AND TENNIS COURTS
L1.2	EXISTING CONDITIONS PLAN - BEACH VOLLEYBALL, FUTSAL, P.E. COURTYARDS AND ENTRY AND PLAZA
L1.3	EXISTING CONDITIONS PLAN - BASEBALL FIELD (NOT IN PACKAGE)
L2.0	EROSION CONTROL PLAN - OVERALL CAMPUS PLAN
L3.1	DEMOLITION PLAN - SOCCER/LACROSSE AND TENNIS COURTS
L3.2	DEMOLITION PLAN - BEACH VOLLEYBALL, FUTSAL AND P.E. COURTYARDS (ENTRY AND PLAZA-NOT IN PACKAGE)
L3.3	DEMOLITION PLAN - BASEBALL FIELD (NOT IN PACKAGE)
L4.1	GRADING PLAN - SOCCER/LACROSSE AND TENNIS COURTS
L4.2	GRADING PLAN - BEACH VOLLEYBALL ,FUTSAL AND P.E. COURTYARDS (ENTRY AND PLAZA- NOT IN PACKAGE)
L4.3	GRADING PLAN - BASEBALL FIELD (NOT IN PACKAGE)
L5.1	DRAINAGE AND UTILITY PLAN - SOCCER/LACROSSE AND TENNIS COURTS
L5.2	DRAINAGE AND UTILITY PLAN - BEACH VOLLEYBALL, FUTSAL AND P.E. COURTYARDS (ENTRY AND PLAZA- NOT IN PACKAGE)
L5.3	DRAINAGE AND UTILITY PLAN - BASEBALL FIELD (NOT IN PACKAGE)
L6.1	LAYOUT PLAN - SOCCER/LACROSSE AND TENNIS COURTS
L6.2	LAYOUT PLAN - BEACH VOLLEYBALL, FUTSAL AND P.E. COURTYARDS (ENTRY AND PLAZA- NOT IN PACKAGE)
L6.3	LAYOUT PLAN - BASEBALL FIELD (NOT IN PACKAGE)
L7.1	MATERIAL PLAN - SOCCER/LACROSSE AND TENNIS COURTS
L7.2	MATERIAL PLAN - BEACH VOLLEYBALL, FUTSAL AND P.E. COURTYARDS (ENTRY AND PLAZA- NOT IN PACKAGE)
L7.3	MATERIAL PLAN - BASEBALL FIELD (NOT IN PACKAGE)
L8.1	IRRIGATION PLAN - SOCCER/LACROSSE AND TENNIS COURTS
L8.2	IRRIGATION PLAN - BEACH VOLLEYBALL, AND FUTSAL (ENTRY AND PLAZA- NOT IN PACKAGE)
L8.3	IRRIGATION PLAN - BASEBALL FIELD (NOT IN PACKAGE)
L9.0	PLANTING PLAN - BEACH VOLLEYBALL, FUTSAL AND BIO-FILTRATION AREA (ENTRY AND PLAZA- NOT IN PACKAGE)
D1.0	DRAINAGE AND UTILITY DETAILS
D1.1	DRAINAGE AND UTILITY DETAILS
D2.0	CONSTRUCTION DETAILS
D2.1	CONSTRUCTION DETAILS
D3.0	CONSTRUCTION DETAILS
D3.1	CONSTRUCTION DETAILS
D4.0	CONSTRUCTION DETAILS
D5.0	CONSTRUCTION DETAILS (NOT IN PACKAGE)
D5.1	CONSTRUCTION DETAILS
D6.0	IRRIGATION DETAILS
ELECTRICAL	
E0.1	GENERAL NOTES, SYMBOL LIST, ABBREVIATIONS, AND FIXTURE SCHEDULE
E1.0	GENERAL SITE PLAN - DEMOLITION
E1.1	ELECTRICAL NEW SITE PLAN
E2.1	ELECTRICAL FLOOR PLAN - BASEBALL FIELD (NOT IN PACKAGE)
E2.2	ELECTRICAL FLOOR PLAN - PARKING/ENTRY. VOLLEYBALL/ PE COURTYARDS
E2.3	ELECTRICAL FLOOR PLAN - SOCCER/LACROSS AND TENNIS COURTS
E4.1	ELECTRICAL SINGLE LINE DIAGRAM
E5.1	ELECTRICAL DETAILS
E5.2	ELECTRICAL DETAILS

ALL IDEAS, DESIGNS, ARRANGEMENTS, AND PLANS INDICATED OR REPRESENTED BY THIS DRAWING ARE OWNED BY AND THE PROPERTY OF VERDE DESIGN, INC. AND WERE CREATED, EVOLVED, AND DEVELOPED FOR USE ON AND IN CONNECTION WITH THE SPECIFIED PROJECT. NONE OF SUCH IDEAS, DESIGNS, ARRANGEMENTS OR PLANS SHALL BE USED, REPRODUCED, OR PUBLISHED BY ANY METHOD, IN WHOLE OR IN PART, OR DISCLOSED TO ANY PERSON, FIRM, OR CORPORATION FOR ANY PURPOSE WHATSOEVER WITHOUT WRITTEN PERMISSION OF VERDE DESIGN, INC.

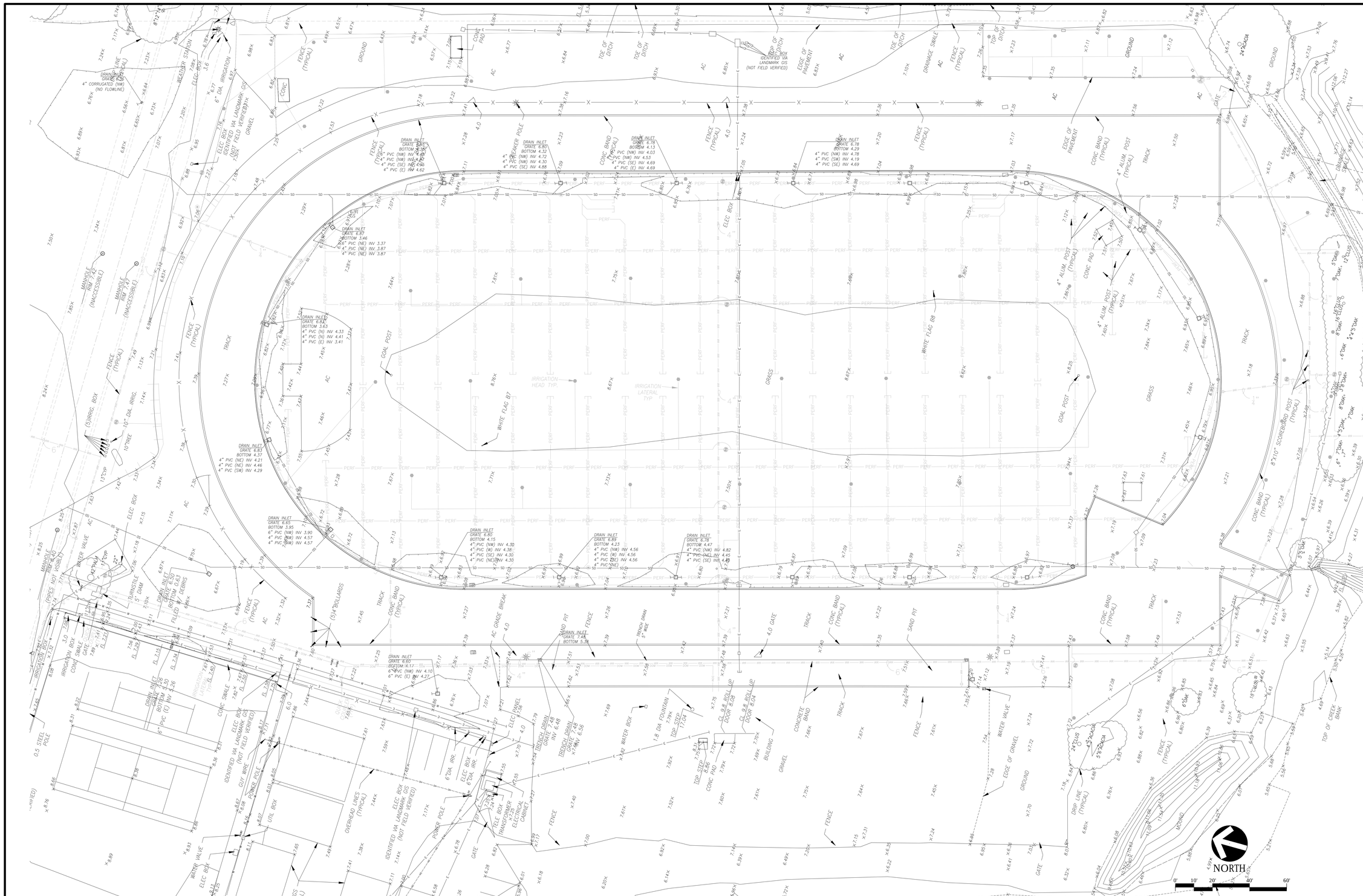

NOTES

1. DISTANCES SHOWN ARE IN FEET AND DECIMALS THEREOF.
2. HORIZONTAL AND VERTICAL DATUM IS BASED ON THE CAMPUS AERIAL DONE BY SANDIS.
4. TOPOGRAPHY SHOWN WAS PERFORMED BY FIELD SURVEY IN APRIL OF 2017.
5. A PORTION OF THE DRAIN INLETS SHOWN HEREON LABELED "(NO FLOWLINE)" CONSIST OF A WYE INSIDE THE BOX THAT IS INACCESSIBLE TO MEASURE AN INVERT ELEVATION.
6. UNDERGROUND UTILITY INFORMATION SHOWN IS A COMPILATION OF LANDMARK GIS DATA, RECORD DRAWINGS AND LOCATED SURFACE UTILITIES. EXACT LIMITS, ROUTES AND LOCATION MAY VARY. CONTRACTOR SHOULD VERIFY ALL UTILITIES IN FIELD PRIOR TO CONSTRUCTION.
7. SOME AREAS WERE INACCESSIBLE DUE TO DENSE VEGETATION AND NOTED HEREON.
8. UTILITY BOXES AND PORTIONS OF PIPE MATERIAL MARKED "NOT FIELD VERIFIED" ARE EITHER BURIED, REMOVED, OR INDISTINGUISHABLE DUE TO DIRT, DEBRIS, MUD OR INACCESSIBLE GRATES OR LIDS. LOCATION SHOWN PER LANDMARK (SEE NOTE 6).

ABBREVIATIONS

AC	ASPHALTIC CONCRETE	GV	GAS VALVE
BFP	BACK FLOW PREVENTOR	HYD	HYDRANT
BLDG	BUILDING	IRR	IRRIGATION
CL	CENTER LINE	OH	OVERHANG
CLUS	TREE CLUSTER	PRV	PRESSURE REDUCING VALVE
CO	CLEAN OUT	SD	STORM DRAIN
CONC	CONCRETE	SDCO	STORM DRAIN CLEANOUT
DEP	DEPRESSED	SDMH	STORM DRAIN MANHOLE
DIA	DIAMETER	SS	SANITARY SEWER
E	ELECTRIC	SSCO	SANITARY SEWER CLEANOUT
EB	EDGE OF BOX	SSMH	SANITARY SEWER MANHOLE
ELEC	ELECTRICAL	STL	STEEL
EP	EDGE OF PAVEMENT	TC	TOP OF CURB
EOC	EDGE OF CONCRETE	TELE	TELEPHONE
FDC	FIRE DEPARTMENT CONNECTION	TOE	TOE OF BANK
FH	FIRE HYDRANT	TOP	TOP OF BANK
FL	FLOW LINE	TYP	TYPICAL
G	GAS	TW	TOP OF WALL
GB	GRADE BREAK	W	WATER
GS	GROUND SHOT	WV	WATER VALVE

LEGEND

	ABANDONED UTILITY
	BUILDING
100	CONTOUR MAJOR (5' INTERVAL)
99	CONTOUR MINOR (1' INTERVAL)
	DRIP LINE
	EDGE OF BRUSH
E	ELECTRIC
	FENCE
F	FIRE LINE
G	GAS
	GRADE BREAK LINE
L	LIGHT CONDUIT
OH	OVER HEAD LINE
	RETAINING WALL
SS	SANITARY SEWER
SD	STORM DRAIN PER LANDMARK GIS
	STORM DRAIN PER FIELD SURVEY
	SWALE / FLOWLINE
	TOE OF BANK
	TOP OF BANK
UG	UNKNOWN UTILITY
W	WATER LINE
PERF	PERFORATED STORM DRAIN LINE
DOM	DOMESTIC WATER LINE
IRR	IRRIGATION MAINLINE
	IRRIGATION HEAD

SHEET INFO AND REFERENCE

1. THIS TOPOGRAPHIC SURVEY WAS PROVIDED BY CSW/ST2 ENGINEERING GROUP, INC. (TELEPHONE): (415) 883-9850 (ADDRESS): 45 LEVERONI COURT, NOVATO, CA 94949.
2. ADDITIONAL INFORMATION (SHOWN SCREENED) IS FROM RECORD DRAWINGS PROVIDED BY THE OWNER AND SITE INVESTIGATIONS BY VERDE DESIGN
3. NOTE THAT THIS IS NOT A COMPLETE UNDERGROUND SURVEY. THIS DRAWING CONTAINS ONLY PARTIAL INFORMATION FOR THE EXISTING IRRIGATION, SANITARY SEWER, STORM DRAIN SYSTEMS, ETC. CONTRACTOR IS RESPONSIBLE FOR VERIFYING EXISTING CONDITIONS.

VERDE DESIGN
LANDSCAPE ARCHITECTURE
CIVIL ENGINEERING
SPORT PLANNING & DESIGN
2455 The Alameda
Santa Clara, CA 95050
tel: 408.985.7200
fax: 408.985.7260
www.VerdeDesigninc.com

STAMP

REGISTERED PROFESSIONAL ENGINEER
DUSTIN CORBETT
No. C-56494
Signature
EXPIRATION DATE
June 30, 2018
STATE OF CALIFORNIA

CONSULTANT

SHEET TITLE
EXISTING CONDITIONS SOCCER/LACROSSE AND TENNIS COURTS

PROJECT NAME
COLLEGE OF MARIN ATHLETIC FACILITIES IMPROVEMENTS

PROJECT ADDRESS
835 COLLEGE AVE.
KENTFIELD, CA
94904

SUBMITTAL	DATE
80% CD SUBMITTAL	06/16/17
100% SUBMITTAL	06/30/17

NO.	REVISIONS	DATE

DRAWN BY	CHECKED BY
BH	DC
DATE ISSUED 06/30/17	SCALE 1"= 20'-0"
PROJ. NO. 1702200	
SHEET NO. L1.1	

ALL IDEAS, DESIGNS, ARRANGEMENTS, AND PLANS INDICATED OR REPRESENTED BY THIS DRAWING ARE OWNED BY AND THE PROPERTY OF VERDE DESIGN, INC. AND WERE CREATED, EVOLVED, AND DEVELOPED FOR USE ON AND IN CONNECTION WITH THE SPECIFIED PROJECT. NONE OF SUCH IDEAS, DESIGNS, ARRANGEMENTS OR PLANS SHALL BE USED, REPRODUCED, OR PUBLISHED BY ANY METHOD, IN WHOLE OR IN PART, OR DISCLOSED TO ANY PERSON, FIRM, OR CORPORATION WITHOUT THE WRITTEN PERMISSION OF VERDE DESIGN, INC.

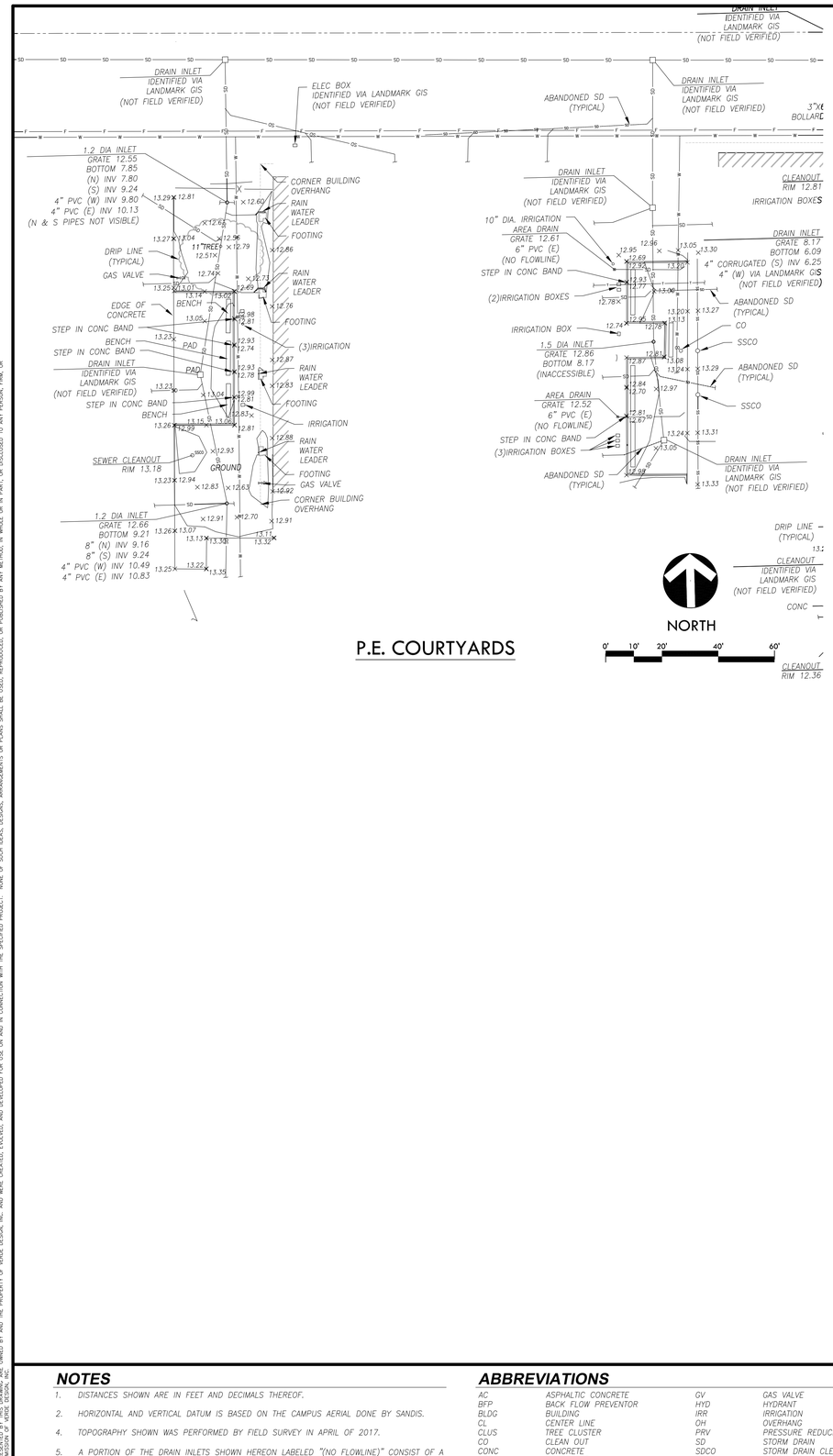

P.E. COURTYARDS

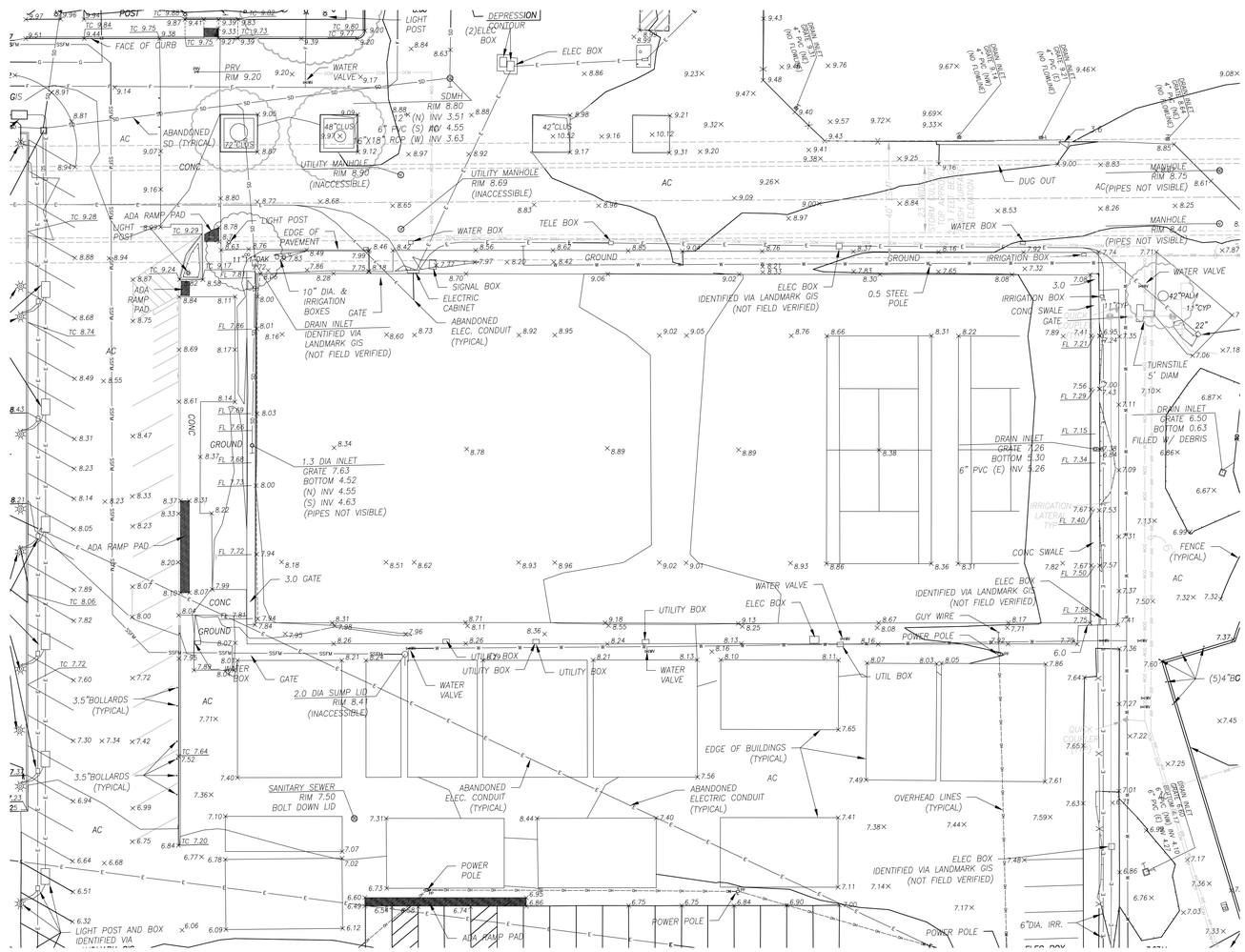

NOTES

1. DISTANCES SHOWN ARE IN FEET AND DECIMALS THEREOF.
2. HORIZONTAL AND VERTICAL DATUM IS BASED ON THE CAMPUS AERIAL DONE BY SANDIS.
4. TOPOGRAPHY SHOWN WAS PERFORMED BY FIELD SURVEY IN APRIL OF 2017.
5. A PORTION OF THE DRAIN INLETS SHOWN HEREON LABELED "(NO FLOWLINE)" CONSIST OF A WYE INSIDE THE BOX THAT IS INACCESSIBLE TO MEASURE AN INVERT ELEVATION.
6. UNDERGROUND UTILITY INFORMATION SHOWN IS A COMPILATION OF LANDMARK GIS DATA, RECORD DRAWINGS AND LOCATED SURFACE UTILITIES. EXACT LIMITS, ROUTES AND LOCATION MAY VARY. CONTRACTOR SHOULD VERIFY ALL UTILITIES IN FIELD PRIOR TO CONSTRUCTION.
7. SOME AREAS WERE INACCESSIBLE DUE TO DENSE VEGETATION AND NOTED HEREON.
8. UTILITY BOXES AND PORTIONS OF PIPE MATERIAL MARKED "NOT FIELD VERIFIED" ARE EITHER BURIED, REMOVED, OR INDISTINGUISHABLE DUE TO DIRT, DEBRIS, MUD OR INACCESSIBLE GRATES OR LIDS. LOCATION SHOWN PER LANDMARK (SEE NOTE 6).

ABBREVIATIONS

AC	ASPHALTIC CONCRETE	GV	GAS VALVE
BFP	BACK FLOW PREVENTOR	HYD	HYDRANT
BLDG	BUILDING	IRR	IRRIGATION
CL	CENTER LINE	OH	OVERHANG
CLUS	TREE CLUSTER	PRV	PRESSURE REDUCING VALVE
CO	CLEAN OUT	SD	STORM DRAIN
CONC	CONCRETE	SDCO	STORM DRAIN CLEANOUT
DEP	DEPRESSED	SDMH	STORM DRAIN MANHOLE
DIA	DIAMETER	SS	SANITARY SEWER
E	ELECTRIC	SSCO	SANITARY SEWER CLEANOUT
EB	EDGE OF BOX	SSMH	SANITARY SEWER MANHOLE
ELEC	ELECTRICAL	STL	STEEL
EP	EDGE OF PAVEMENT	TC	TOP OF CURB
EOC	EDGE OF CONCRETE	TELE	TELEPHONE
FDC	FIRE DEPARTMENT CONNECTION	TOE	TOE OF BANK
FH	FIRE HYDRANT	TOP	TOP OF BANK
FL	FLOW LINE	TYP	TYPICAL
G	GAS	TW	TOP OF WALL
GB	GRADE BREAK	W	WATER
GS	GROUND SHOT	WV	WATER VALVE

LEGEND

	ABANDONED UTILITY
	BUILDING
100	CONTOUR MAJOR (5' INTERVAL)
99	CONTOUR MINOR (1' INTERVAL)
	DRIP LINE
	EDGE OF BRUSH
E	ELECTRIC
	FENCE
F	FIRE LINE
G	GAS
	GRADE BREAK LINE
L	LIGHT CONDUIT
OH	OVER HEAD LINE
	RETAINING WALL
SS	SANITARY SEWER
SD	STORM DRAIN PER LANDMARK GIS
	STORM DRAIN PER FIELD SURVEY
	SWALE / FLOWLINE
	TOE OF BANK
	TOP OF BANK
UG	UNKNOWN UTILITY
W	WATER LINE
DOM	DOMESTIC WATER LINE
IRR	IRRIGATION MAIN LINE

SHEET INFO AND REFERENCE

1. THIS TOPOGRAPHIC SURVEY WAS PROVIDED BY CSW/ST2 ENGINEERING GROUP, INC. (TELEPHONE): (415) 883-9850 (ADDRESS): 45 LEVERONI COURT, NOVATO, CA 94949.
2. ADDITIONAL INFORMATION (SHOWN SCREENED) IS FROM RECORD DRAWINGS PROVIDED BY THE OWNER AND SITE INVESTIGATIONS BY VERDE DESIGN
3. NOTE THAT THIS IS NOT A COMPLETE UNDERGROUND SURVEY. THIS DRAWING CONTAINS ONLY PARTIAL INFORMATION FOR THE EXISTING IRRIGATION, SANITARY SEWER, STORM DRAIN SYSTEMS, ETC. CONTRACTOR IS RESPONSIBLE FOR VERIFYING EXISTING CONDITIONS.

VERDE DESIGN
LANDSCAPE ARCHITECTURE
CIVIL ENGINEERING
SPORT PLANNING & DESIGN
2455 The Alameda
Santa Clara, CA 95050
tel: 408.985.7200
fax: 408.985.7260
www.VerdeDesigninc.com

STAMP

REGISTERED PROFESSIONAL ENGINEER — DUSTIN CORBETT — No. C-56494 — Signature — EXPIRATION DATE June 30, 2019 — STATE OF CALIFORNIA

CONSULTANT

SHEET TITLE
EXISTING CONDITIONS - VOLLEYBALL/FUTSAL/ P.E. COURTYARDS

PROJECT NAME
COLLEGE OF MARIN ATHLETIC FACILITIES IMPROVEMENTS

PROJECT ADDRESS
835 COLLEGE AVE.
KENTFIELD, CA
94904

SUBMITTAL	DATE
80% CD SUBMITTAL	06/16/17
100% SUBMITTAL	06/30/17

NO.	REVISIONS	DATE

DRAWN BY BH	CHECKED BY DC
DATE ISSUED 06/30/17	SCALE 1"= 20'-0"
PROJ. NO. 1702200	
SHEET NO. L1.2	

ALL IDEAS, DESIGNS, ARRANGEMENTS, AND PLANS INDICATED OR REPRESENTED BY THIS DRAWING ARE OWNED BY AND THE PROPERTY OF VERDE DESIGN, INC. AND WERE CREATED, EVOLVED, AND DEVELOPED FOR USE ON AND IN CONNECTION WITH THE SPECIFIED PROJECT. NONE OF SUCH IDEAS, DESIGNS, ARRANGEMENTS, AND PLANS SHALL BE USED, REPRODUCED, OR PUBLISHED BY ANY METHOD, IN WHOLE OR IN PART, OR DISCLOSED TO ANY PERSON, FIRM, OR CORPORATION FOR ANY PURPOSE WHATSOEVER WITHOUT THE EXPRESSED WRITTEN CONSENT OF VERDE DESIGN, INC.

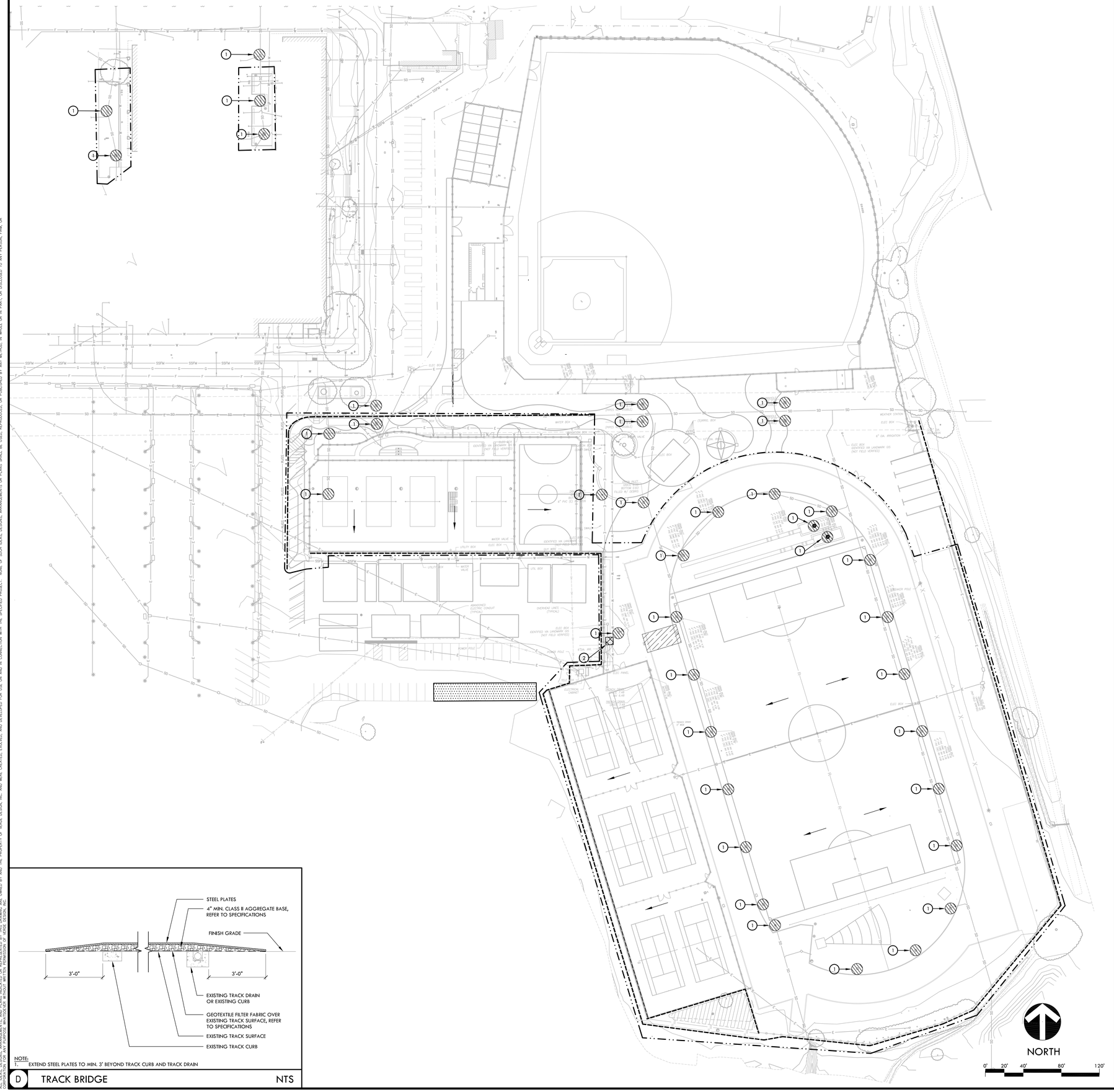

EROSION AND SEDIMENT CONTROL NOTES

1. EROSION AND SEDIMENT CONTROL SHALL BE CONSTRUCTED DURING FIRST WEEK OF CONSTRUCTION.
2. EROSION AND SEDIMENT CONTROL SHALL REMAIN THROUGHOUT CONSTRUCTION AND BE REMOVED AND DISPOSED OF DURING MAINTENANCE PERIOD.
3. EROSION AND SEDIMENT CONTROL MAY BE ADJUSTED THROUGH CONSTRUCTION WITH APPROVAL OR AS DIRECTED BY OWNER'S REPRESENTATIVE.
4. CONTRACTOR SHALL SWEEP STREETS AND PARKING AREAS AFFECTED BY CONSTRUCTION WITH STREET SWEEPER AS REQUIRED TO KEEP PAVING CLEAN OF CONSTRUCTION DEBRIS.

EROSION AND SEDIMENT CONTROL LEGEND

SYM	DESCRIPTION	DTL REF
1	FILTER FABRIC TO BE SECURELY ATTACHED TO DRAINAGE STRUCTURE TOP AND PERIMETER WADDLE	B -
	LIMIT OF WORK	
	SEDIMENT RETENTION FIBER BARRIER	A -
2	CONSTRUCTION WASHOUT AREA - PROVIDE A WASHOUT BIN FOR CONSTRUCTION WASHOUT AND REMOVE AT END OF CONSTRUCTION.	C -
	CONSTRUCTION STAGING AREA	
	DIRECTION OF SURFACE FLOW	
	TRACK BRIDGE	D -
	BASEBALL/ENTRY AND PLAZA LIMIT OF WORK (NOT IN PACKAGE)	

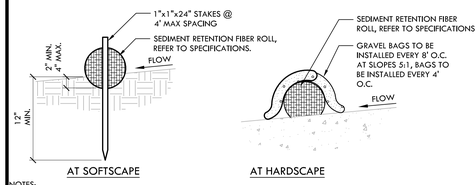

AT SOFTSCAPE AT HARDSCAPE

NOTES:
1. INSTALL SEDIMENT RETENTION FIBER ROLLS (FIBER ROLLS / WATTLES) AS LOCATED ON PLANS AND AS REQUIRED PER THE STATE GENERAL PERMIT FOR STORMWATER DISCHARGE.
2. FIBER ROLLS SHALL BE CONSTRUCTED LONG ENOUGH TO EXTEND ACROSS FLOW PATH OF POTENTIAL RUN-OFF AND RUN-ON.
3. PREPARE GRADES REMOVING SURFACE DEVIATIONS, LARGE STONES OR DEBRIS THAT WILL INHIBIT CONTINUOUS CONTACT OF THE FIBER ROLL WITH THE GRADE.
4. PRIOR TO FILTER ROLL INSTALLATION EXCAVATE A CONCAVE TRENCH 2" MIN., 4" MAX. DEEP ALONG THE PROPOSED FIBER ROLL LOCATION.
5. INSTALL FIBER ROLLS WITH CONTINUOUS CONTACT OF THE BOTTOM OF THE EXCAVATED TRENCH.
6. STAKE ROLL ON BOTH SIDES 2' FROM OF ENDS AND AT 4' MAXIMUM SPACING WITH 2"X2"X24" STAKES. DRIVE STAKES IN ON ALTERNATING SIDES OF THE ROLL AND OVERLAP ABUTTING ROLL ENDS 1.2" MIN.
7. BACKFILLED BOTH SIDES TO WATTLE AND TAMP SOIL TO FIRM AND STABLE..
8. CONTRACTOR SHALL MAKE WEEKLY INSPECTIONS OR AS INDICATED IN STORMWATER POLLUTION PREVENTION PLAN, OR THE STATE GENERAL PERMIT FOR STORMWATER DISCHARGE.

A SEDIMENT RETENTION FIBER ROLL NTS

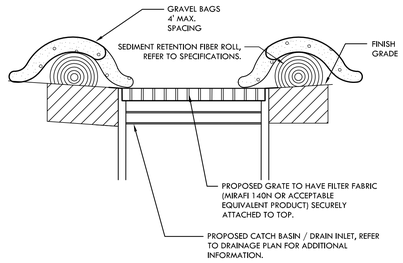

SECTION

NOTES:
CONTRACTOR TO CONFORM TO NOTES PROVIDED IN DETAIL A, THIS SHEET.

B STORM DRAIN INLET FILTER FOR EXISTING AND PROPOSED STORM DRAINS NTS

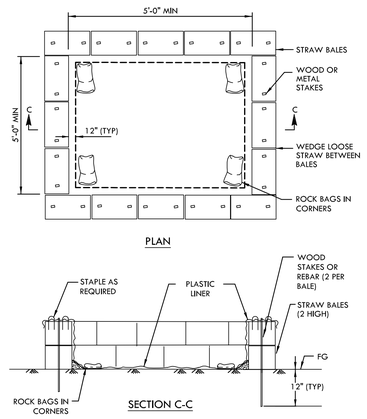

C TEMPORARY CONCRETE WASHOUT FACILITY NTS

NOTE:
1. EXTEND STEEL PLATES TO MIN. 3' BEYOND TRACK CURB AND TRACK DRAIN

D TRACK BRIDGE NTS

VERDE DESIGN
LANDSCAPE ARCHITECTURE
CIVIL ENGINEERING
SPORT PLANNING & DESIGN
2455 The Alameda
Santa Clara, CA 95050
tel: 408.985.7200
fax: 408.985.7260
www.VerdeDesigninc.com

STAMP

REGISTERED PROFESSIONAL ENGINEER
DUSTIN CORBETT
No. C-56494
Signature
EXPIRATION DATE June 30, 2019
STATE OF CALIFORNIA

CONSULTANT

SHEET TITLE
EROSION AND SEDIMENT CONTROL PLAN

PROJECT NAME
COLLEGE OF MARIN ATHLETIC FACILITIES IMPROVEMENTS

PROJECT ADDRESS
835 COLLEGE AVE.
KENTFIELD, CA
94904

SUBMITTAL	DATE
80% CD SUBMITTAL	06/16/17
100% SUBMITTAL	06/30/17

NO.	REVISIONS	DATE

DRAWN BY	CHECKED BY
KL	DC
DATE ISSUED 06/30/17	SCALE 1"= 40'-0"

PROJ. NO. 1702200

SHEET NO. L2.0

ALL IDEAS, DESIGNS, ARRANGEMENTS, AND PLANS INDICATED OR REPRESENTED BY THIS DRAWING ARE OWNED BY AND THE PROPERTY OF VERDE DESIGN, INC. AND WERE CREATED, EVOLVED, AND DEVELOPED FOR USE ON AND IN CONNECTION WITH THE SPECIFIED PROJECT. NONE OF SUCH IDEAS, DESIGNS, ARRANGEMENTS OR PLANS SHALL BE USED, REPRODUCED, OR PUBLISHED BY ANY METHOD, IN WHOLE OR IN PART, OR DISCLOSED TO ANY PERSON, FIRM, OR CORPORATION WITHOUT WRITTEN PERMISSION OF VERDE DESIGN, INC.

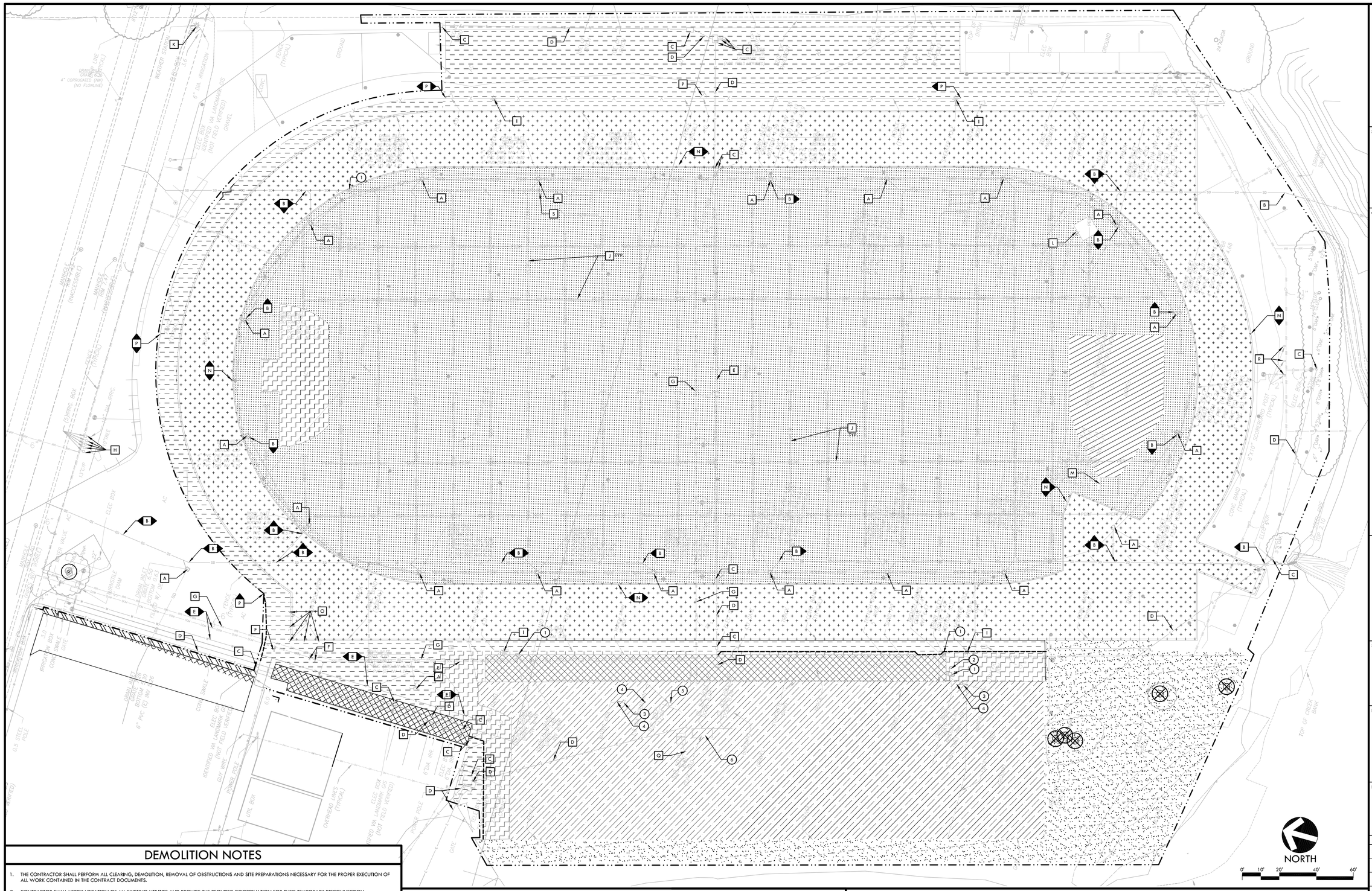

DEMOLITION NOTES

1. THE CONTRACTOR SHALL PERFORM ALL CLEARING, DEMOLITION, REMOVAL OF OBSTRUCTIONS AND SITE PREPARATIONS NECESSARY FOR THE PROPER EXECUTION OF ALL WORK CONTAINED IN THE CONTRACT DOCUMENTS.
2. CONTRACTOR SHALL VERIFY LOCATION OF ALL EXISTING UTILITIES AND PROVIDE THE REQUIRED COORDINATION FOR THEIR TEMPORARY DISCONNECTION, PROTECTION, REMOVAL AND/OR STORAGE AS MAY BE REQUIRED DURING CONSTRUCTION. CONTRACTOR SHALL COORDINATE WITH THE OWNER TO DETERMINE WHETHER TEMPORARY SERVICES ARE NECESSARY.
3. THE CONTRACTOR SHALL VISIT THE SITE PRIOR TO BID SUBMITTAL TO DETERMINE THE EXACT EXTENT AND DEPTH OF SITE DEMOLITION REQUIRED AND VERIFY COMPLIANCE WITH DRAWINGS. THE OWNER SHALL BE NOTIFIED IMMEDIATELY OF ANY DISCREPANCIES.
4. THE CONTRACTOR SHALL VERIFY THE LOCATIONS OF ALL EXISTING UTILITIES, STRUCTURES AND SERVICES BEFORE COMMENCING WORK. THE LOCATIONS OF UTILITIES, STRUCTURES AND SERVICES SHOWN IN THE CONTRACT DOCUMENTS SHALL BE DEEMED TO BE APPROXIMATIONS ONLY. ALL DISCREPANCIES BETWEEN WHAT IS SHOWN AND THE ACTUAL FIELD CONDITIONS SHALL BE REPORTED TO THE OWNER'S REPRESENTATIVE. THE CONTRACTOR SHALL CONTACT UNDERGROUND SERVICE ALERT (USA) AT (800) 227-2600 PRIOR TO ANY DEMOLITION OR EXCAVATION. UPON COMPLETION OF USA MARKING OPERATIONS, CONTRACTOR SHALL RECORD ALL UTILITY MARKINGS ON A SEPARATE SET OF DRAWINGS. THIS SET SHALL BE KEPT ON-SITE FOR REFERENCE FOR DURATION OF CONTRACT. NOTIFY THE OWNER'S REPRESENTATIVE IMMEDIATELY SHOULD CONFLICTS ARISE AND REDIRECT WORK TO AVOID DELAY.
5. ALL EXISTING ITEMS ARE TO REMAIN UNLESS OTHERWISE NOTED. THE CONTRACTOR SHALL BE RESPONSIBLE FOR REPAIRING OR REPLACING, AT CONTRACTOR'S EXPENSE, ANY EXISTING ITEM DAMAGED OR DESTROYED BY CONSTRUCTION OPERATIONS. CONTRACTOR SHALL ALSO BE RESPONSIBLE FOR REPAIRING OR REPLACING ANY AND ALL DAMAGES TO ADJACENT PROPERTIES. THE DAMAGED ITEMS SHALL BE RESTORED TO AN "AS-WAS" OR BETTER CONDITION OR REPLACED PER THE DISCRETION OF THE OWNER'S REPRESENTATIVE.
6. PRIOR TO ANY DEMOLITION WORK, CONTRACTOR SHALL INSTALL SELF-SUPPORTING INTERLOCKING CHAIN-LINK TEMPORARY CONSTRUCTION FENCING TO ENCLOSE AND SECURE THE PROJECT AREA LIMIT OF WORK. THE FENCING SHALL CONTAIN PEDESTRIAN AND/OR VEHICULAR ACCESS GATES AS NECESSARY AND SHALL BE MINIMUM 6 FEET HIGH WITH A TOP AND BOTTOM RAIL WITH KNUCKLED TOP AND BOTTOM SELVAGE (NO BARBED WIRE PERMITTED). ASHALL INCLUDE FULL HEIGHT FRREEN SHADE CLOTH COVERING. THE CONSTRUCTION FENCING WORK SHALL BE SUBJECT TO THE DISCRETION OF THE OWNER'S REPRESENTATIVE.
7. PRIOR TO ANY DEMOLITION WORK, CONTRACTOR SHALL PROTECT ALL EXISTING PLANT MATERIAL NOT SCHEDULED FOR REMOVAL BY INSTALLING TEMPORARY 4 FOOT HIGH "BLAZE ORANGE" CONSTRUCTION SAFETY FENCING AT THE DRIPLINE OR PERIMETER. THE FENCING SHALL BE SECURED WITH DRIVEN METAL STAKES. ALL TREE PROTECTION WORK SHALL BE SUBJECT TO THE DISCRETION OF THE OWNER'S REPRESENTATIVE.
8. DEMOLITION SHALL INCLUDE THE REMOVAL OF ITEM AND ANY FOUNDATION OR STRUCTURAL SUPPORT RELATED TO ITEM FOR PLANT MATERIAL THIS SHALL INCLUDE STUMPS AND ROOTS OVER 2 INCHES IN DIAMETER. DISPOSAL SHALL BE OFF-SITE IN A LEGAL MANNER ACCEPTABLE TO THE OWNER'S REPRESENTATIVE AND IN COMPLIANCE WITH ALL FEDERAL, STATE AND LOCAL CODES AND ORDINANCES.
9. REFER TO SPECIFICATIONS FOR ADDITIONAL CLEARING, GRUBBING, TOPSOIL STOCKPILING AND OTHER PERTINENT INFORMATION.

DEMOLITION LEGEND

SYM	DESCRIPTION
	LIMIT OF WORK
	CLEAR AND GRUB EXISTING VEGETATED AREA. ORGANIC MATERIAL TO BE REMOVED FROM NEW SYNTHETIC TURF AREAS.
	CLEAR AND GRUB EXISTING VEGETATED AREA. EXISTING NATIVE MATERIAL TO BE CLEAR AND STRIPPED.
	EXISTING ASPHALT PAVING INCLUDING BASE MATERIALS AND HEADERBOARDS TO REMAIN AND BE PROTECTED.
	EXISTING ALL-WEATHER TRACK SURFACING TO REMAIN AND BE PROTECTED
	EXISTING EXPOSED SOIL/SUBGRADE TO BE REMOVED AS NECESSARY TO ACHIEVE NEW GRADES FOR PROPOSED WORK. STOCKPILED SOIL SHALL BE STOCKPILED AND USED AS FILL MATERIAL. CONTRACTOR TO PROVIDED ARCHITECT/GEOTECH WITH PROPOSED REUSE LOCATION AND GAIN APPROVED BEFORE USE.
	EXISTING TRACK FINES TO BE DEMOLISHED AND REMOVED.
	EXISTING GRAVEL, INCLUDING BASE MATERIAL, TO BE STOCKPILED AND REUSED AND AS BASE MATERIAL. CONTRACTOR TO PROVIDE ARCHITECT WITH PROPOSED REUSE LOCATION AND GAIN APPROVED BEFORE USE.

SYM	DESCRIPTION
	EXISTING ASPHALT PAVING, INCLUDING BASE MATERIAL, TO BE DEMOLISHED AND REMOVED.
	REMOVE EXISTING TREES
	TREE TO REMAIN AND BE PROTECTED, REFER TO SPECIFICATIONS
	SAWCUT AND REMOVE EXISTING PAVING INCLUDING BASE MATERIAL.

DEMOLITION ITEMS

ITEMS TO BE DEMOLISHED & REMOVED/ABANDONED

1. STORM DRAIN STRUCTURE TO BE DEMOLISHED AND REMOVED.
2. STORM DRAIN LINE TO BE DEMOLISHED AND REMOVED.
3. WATER VALVE AND BOX TO BE DEMOLISHED AND REMOVED.
4. WATER LINE TO BE CUT, CAPPED AND ABANDON UNLESS IT IS IN CONFLICT WITH PROPOSED IMPROVEMENTS, IN WHICH IT SHALL BE DEMOLISHED AND REMOVED.
5. DRINKING FOUNTAIN TO BE DEMOLISHED AND REMOVED.
6. CONCRETE PAD/EDGEBAND, INCLUDING BASE MATERIAL, TO BE DEMOLISHED AND REMOVED.
7. STORM DRAIN CLEANOUT TO BE CAPPED AND ABANDONED BELOW PROPOSED TOP OF ROCK ELEVATION

ITEMS TO BE PROTECTED OR RELOCATED

- A — STORM DRAIN STRUCTURE TO REMAIN AND BE PROTECTED. STRUCTURES WITHIN LIMITS OF PROPOSED SYNTHETIC TURF THAT ARE NOT A PART OF THE NEW STORM SYSTEM SHALL BE FITTED WITH NEW SOLID METAL LID AND ABANDON IN PLACE. STRUCTURES TO BE MODIFIED SHALL BE FITTED WITH NEW SOLID METAL LID AND SET TO PROPOSED TOP OF ROCK ELEVATION. STRUCTURES IN HARDSCAPE TO BE ADJUSTED TO PROPOSED FINISH SURFACE ELEVATION. REFER TO DRAINAGE PLAN FOR ADDITIONAL INFORMATION.
- B — STORM DRAIN LINE TO REMAIN AND BE PROTECTED.
- C — ELECTRICAL BOXES SHALL REMAIN AND BE PROTECTED. REFER TO ELECTRICAL DRAWINGS FOR ADDITIONAL INFORMATION. ELECTRICAL BOXES WITHIN SYNTHETIC TURF SHALL RECEIVE NEW BOXES. REFER TO DETAIL Q, SHEET D1.0
- D — ELECTRICAL LINES SHALL REMAIN AND BE PROTECTED. REFER TO ELECTRICAL DRAWINGS FOR ADDITIONAL INFORMATION.
- E — WATER LINE TO REMAIN AND BE PROTECTED.
- F — WATER VALVE TO REMAIN AND BE PROTECTED.
- G — IRRIGATION MAINLINE TO REMAIN AND BE PROTECTED.
- H — IRRIGATION VALVE AND BOX TO REMAIN AND BE PROTECTED.

ITEMS TO BE PROTECTED OR RELOCATED

- I — LIGHT POLE AND ASSOCIATED BASE MATERIALS SHALL REMAIN AND BE PROTECTED.
- J — PERFORATED DRAIN LINES/IRRIGATION LATERALS TO REMAIN UNLESS IN CONFLICT WITH PROPOSED IMPROVEMENTS.
- K — WEATHER STATION TO REMAIN AND BE PROTECTED.
- L — DISCUS PAD AND CAGE, INCLUDING FOOTINGS, SHALL REMAIN AND BE PROTECTED.
- M — SHOT PUT PAD TO REMAIN AND BE PROTECTED.
- N — TRACK EDGE TO REMAIN AND BE PROTECTED.
- O — BOLLARDS TO REMAIN AND BE PROTECTED.
- P — FENCING AND GATE TO REMAIN AND BE PROTECTED.
- Q — INFORMATIONAL KIOSK TO BE SALVAGED AND RELOCATED. REFER TO MATERIAL PLANS FOR LOCATION.
- R — EXISTING SCOREBOARD BEAMS AND ELECTRICAL EQUIPMENT TO REMAIN AND BE PROTECTED.
- S — EXISTING STORM DRAIN CLEANOUT TO REMAIN. ADJUST TOP OF BOX TO TOP OF SHOCK PAD ELEVATION. REFER TO DETAIL D, SHEET D1.0

VERDE DESIGN
LANDSCAPE ARCHITECTURE
CIVIL ENGINEERING
SPORT PLANNING & DESIGN
2455 The Alameda
Santa Clara, CA 95050
tel: 408.985.7200
fax: 408.985.7260
www.VerdeDesigninc.com

STAMP

REGISTERED PROFESSIONAL ENGINEER — DERTIN CORBETT — No. C-56494 — Signature — EXPIRATION DATE June 30, 2019 — STATE OF CALIFORNIA

CONSULTANT

SHEET TITLE
DEMOLITION PLAN - SOCCER/LACROSSE AND TENNIS COURTS

PROJECT NAME
COLLEGE OF MARIN ATHLETIC FACILITIES IMPROVEMENTS

PROJECT ADDRESS
835 COLLEGE AVE.
KENTFIELD, CA
94904

SUBMITTAL	DATE
80% CD SUBMITTAL	06/16/17
100% SUBMITTAL	06/30/17

NO.	REVISIONS	DATE

DRAWN BY	CHECKED BY
WD	DC
DATE ISSUED	SCALE 1"= 20'-0"

PROJ. NO. 1702200

SHEET NO. L3.1

ALL IDEAS, DESIGNS, ARRANGEMENTS, AND PLANS INDICATED OR REPRESENTED BY THIS DRAWING ARE OWNED BY AND THE PROPERTY OF VERDE DESIGN, INC. AND WERE CREATED, EVOLVED, AND DEVELOPED FOR USE ON AND IN CONNECTION WITH THE SPECIFIED PROJECT. NONE OF SUCH IDEAS, DESIGNS, ARRANGEMENTS OR PLANS SHALL BE USED, REPRODUCED, OR PUBLISHED BY ANY METHOD, IN WHOLE OR IN PART, OR DISCLOSED TO ANY PERSON, FIRM, OR CORPORATION FOR ANY PURPOSE WHATSOEVER WITHOUT THE WRITTEN PERMISSION OF VERDE DESIGN, INC.

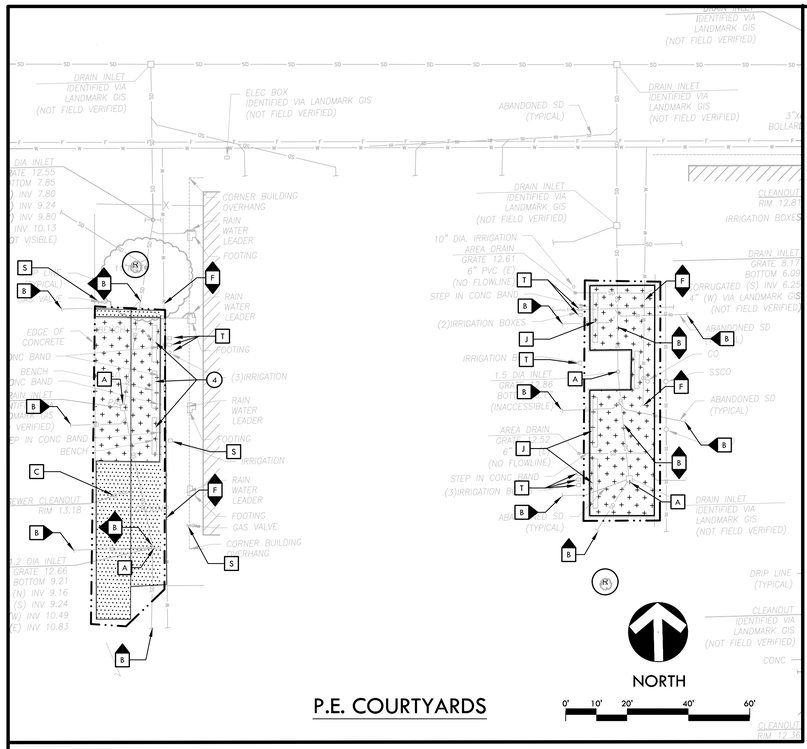

DEMOLITION NOTES

1. THE CONTRACTOR SHALL PERFORM ALL CLEARING, DEMOLITION, REMOVAL OF OBSTRUCTIONS AND SITE PREPARATIONS NECESSARY FOR THE PROPER EXECUTION OF ALL WORK CONTAINED IN THE CONTRACT DOCUMENTS.
2. CONTRACTOR SHALL VERIFY LOCATION OF ALL EXISTING UTILITIES AND PROVIDE THE REQUIRED COORDINATION FOR THEIR TEMPORARY DISCONNECTION, PROTECTION, REMOVAL AND/OR STORAGE AS MAY BE REQUIRED DURING CONSTRUCTION. CONTRACTOR SHALL COORDINATE WITH THE OWNER TO DETERMINE WHETHER TEMPORARY SERVICES ARE NECESSARY.
3. THE CONTRACTOR SHALL VISIT THE SITE PRIOR TO BID SUBMITTAL TO DETERMINE THE EXACT EXTENT AND DEPTH OF SITE DEMOLITION REQUIRED AND VERIFY COMPLIANCE WITH DRAWINGS. THE OWNER SHALL BE NOTIFIED IMMEDIATELY OF ANY DISCREPANCIES.
4. THE CONTRACTOR SHALL VERIFY THE LOCATIONS OF ALL EXISTING UTILITIES, STRUCTURES AND SERVICES BEFORE COMMENCING WORK. THE LOCATIONS OF UTILITIES, STRUCTURES AND SERVICES SHOWN IN THE CONTRACT DOCUMENTS SHALL BE DEEMED TO BE APPROXIMATIONS ONLY. ALL DISCREPANCIES BETWEEN WHAT IS SHOWN AND THE ACTUAL FIELD CONDITIONS SHALL BE REPORTED TO THE OWNER'S REPRESENTATIVE. THE CONTRACTOR SHALL CONTACT UNDERGROUND SERVICE ALERT (USA) AT (800) 227-2600 PRIOR TO ANY DEMOLITION OR EXCAVATION. UPON COMPLETION OF USA MARKING OPERATIONS, CONTRACTOR SHALL RECORD ALL UTILITY MARKINGS ON A SEPARATE SET OF DRAWINGS. THIS SET SHALL BE KEPT ON-SITE FOR REFERENCE FOR DURATION OF CONTRACT. NOTIFY THE OWNER'S REPRESENTATIVE IMMEDIATELY SHOULD CONFLICTS ARISE AND REDIRECT WORK TO AVOID DELAY.
5. ALL EXISTING ITEMS ARE TO REMAIN UNLESS OTHERWISE NOTED. THE CONTRACTOR SHALL BE RESPONSIBLE FOR REPAIRING OR REPLACING, AT CONTRACTOR'S EXPENSE, ANY EXISTING ITEM DAMAGED OR DESTROYED BY CONSTRUCTION OPERATIONS. CONTRACTOR SHALL ALSO BE RESPONSIBLE FOR REPAIRING OR REPLACING ANY AND ALL DAMAGES TO ADJACENT PROPERTIES. THE DAMAGED ITEMS SHALL BE RESTORED TO AN "AS-WAS" OR BETTER CONDITION OR REPLACED PER THE DISCRETION OF THE OWNER'S REPRESENTATIVE.
6. PRIOR TO ANY DEMOLITION WORK, CONTRACTOR SHALL INSTALL SELF-SUPPORTING INTERLOCKING CHAIN-LINK TEMPORARY CONSTRUCTION FENCING TO ENCLOSE AND SECURE THE PROJECT AREA LIMIT OF WORK. THE FENCING SHALL CONTAIN PEDESTRIAN AND/OR VEHICULAR ACCESS GATES AS NECESSARY AND SHALL BE MINIMUM 6 FEET HIGH WITH A TOP AND BOTTOM RAIL WITH KNUCKLED TOP AND BOTTOM SELVAGE (NO BARBED WIRE PERMITTED). ASHALL INCLUDE FULL HEIGHT FREEN SHADE CLOTH COVERING. THE CONSTRUCTION FENCING WORK SHALL BE SUBJECT TO THE DISCRETION OF THE OWNER'S REPRESENTATIVE.
7. PRIOR TO ANY DEMOLITION WORK, CONTRACTOR SHALL PROTECT ALL EXISTING PLANT MATERIAL NOT SCHEDULED FOR REMOVAL BY INSTALLING TEMPORARY 4 FOOT HIGH "BLAZE ORANGE" CONSTRUCTION SAFETY FENCING AT THE DRIPLINE OR PERIMETER. THE FENCING SHALL BE SECURED WITH DRIVEN METAL STAKES. ALL TREE PROTECTION WORK SHALL BE SUBJECT TO THE DISCRETION OF THE OWNER'S REPRESENTATIVE.
8. DEMOLITION SHALL INCLUDE THE REMOVAL OF ITEM AND ANY FOUNDATION OR STRUCTURAL SUPPORT RELATED TO ITEM FOR PLANT MATERIAL THIS SHALL INCLUDE STUMPS AND ROOTS OVER 2 INCHES IN DIAMETER. DISPOSAL SHALL BE OFF-SITE IN A LEGAL MANNER ACCEPTABLE TO THE OWNER'S REPRESENTATIVE AND IN COMPLIANCE WITH ALL FEDERAL, STATE AND LOCAL CODES AND ORDINANCES.
9. REFER TO SPECIFICATIONS FOR ADDITIONAL CLEARING, GRUBBING, TOPSOIL STOCKPILING AND OTHER PERTINENT INFORMATION.

DEMOLITION LEGEND

SYM	DESCRIPTION	SYM	DESCRIPTION
	LIMIT OF WORK		EXISTING ALL-WEATHER TRACK SURFACING TO BE DEMOLISHED AND REMOVED. EXISTING ASPHALTIC CONCRETE AND BASE MATERIAL TO BE DEMOLISHED AND REMOVED.
	CLEAR AND GRUB EXISTING VEGETATED AREA. ORGANIC MATERIAL TO BE REMOVED FROM NEW SYNTHETIC TURF AREAS.		
	CLEAR AND GRUB EXISTING VEGETATED AREA. EXISTING NATIVE MATERIAL TO BE CLEAR AND STRIPPED.		
	EXISTING EXPOSED SOIL/SUBGRADE TO BE REMOVED AS NECESSARY TO ACHIEVE NEW GRADES FOR PROPOSED WORK. STOCKPILED SOIL SHALL BE STOCKPILED AND USED AS FILL MATERIAL. CONTRACTOR TO PROVIDED ARCHITECT/GEOTECH WITH PROPOSED REUSE LOCATION AND GAIN APPROVED BEFORE USE.		
	EXISTING TENNIS SURFACING TO REMAIN AND BE PROTECTED.		
	EXISTING HARDSCAPE, INCLUDING BASE MATERIAL, TO BE DEMOLISHED AND REMOVED.		
R	TREE TO REMAIN AND BE PROTECTED, REFER TO SPECIFICATIONS		
	SAWCUT AND REMOVE EXISTING PAVING INCLUDING BASE MATERIAL.		

DEMOLITION ITEMS

ITEMS TO BE DEMOLISHED AND/OR REMOVED

1. WATER LINE TO BE CUT, CAPPED, AND ABANDON IN PLACE IN LESS IT IS IN CONFLICT WITH PROPOSED IMPROVEMENTS, IN WHICH CASE, LINE TO BE DEMOLISHED AND REMOVED.
2. DRINKING FOUNTAIN TO BE DEMOLISHED AND REMOVED.
3. POST AND FOOTING TO BE DEMOLISHED AND REMOVED.
4. BENCHES, INCLUDING FOOTING, TO BE DEMOLISHED AND REMOVED.
5. NOT USED
6. CONCRETE DRAINAGE SWALE TO BE DEMOLISHED AND REMOVED.

ITEMS TO BE PROTECTED OR RELOCATED

- A STORM DRAIN STRUCTURE TO REMAIN AND BE PROTECTED. ADJUST RIM TO FINISH SURFACE ELEVATION.
- B STORM DRAIN LINE TO REMAIN AND BE PROTECTED.
- C SANITARY SEWER STRUCTURE TO REMAIN AND BE PROTECTED.
- D SANITARY SEWER LINE TO REMAIN AND BE PROTECTED.
- E ELECTRICAL LINES AND BOXES SHALL REMAIN AND BE PROTECTED.
- F WATER LINE TO REMAIN AND BE PROTECTED.
- G WATER VALVE TO REMAIN AND BE PROTECTED.
- H IRRIGATION MAINLINE TO REMAIN AND BE PROTECTED.
- I IRRIGATION VALVE AND BOX TO BE SALVAGED AND TURNED OVER TO OWNER.
- J BENCHES TO REMAIN AND BE PROTECTED.
- K ADA PARKING SIGNS TO BE SALVAGED TURNED OVER TO OWNER.
- L TRUNCATED DOMES TO BE SALVAGED AND TURNED OVER TO OWNER.

ITEMS TO BE PROTECTED OR RELOCATED

- M OVER HEAD POWER POLE AND LINE TO REMAIN AND BE PROTECTED.
- N SHED TO BE SALVAGED AND TURNED OVER TO OWNER.
- O CONCRETE EDGEBAND TO REMAIN UNTIL ENTRY/PARKING PHASE OF CONSTRUCTION BEGINS (NOT A PART OF THIS BID PACKAGE).
- P ADA RAMP PADS TO REMAIN UTIL ENTRY/PARKING PHASE OF CONSTRUCTION BEGINS (NOT A PART OF THIS BID PACKAGE).
- Q MANHOLES AT CONCRETE CULVERT TO REMAIN AND BE PROTECTED.
- R EXISTING 20 FOOT WIDE CONCRETE CULVERT TO REMAIN AND BE PROTECTED.
- S GAS VALVE AND GAS LINES TO REMAIN AND BE PROTECTED. CONTRACTOR TO POTHOLE AND VERIFY LOCATION OF VALVE AND LINE PRIOR TO WORK IN THIS AREA.
- T IRRIGATION VALVES TO REMAIN AND BE PROTECTED.

VERDE DESIGN
LANDSCAPE ARCHITECTURE
CIVIL ENGINEERING
SPORT PLANNING & DESIGN
2455 The Alameda
Santa Clara, CA 95050
tel: 408.985.7200
fax: 408.985.7260
www.VerdeDesigninc.com

STAMP

REGISTERED PROFESSIONAL ENGINEER
DOUGLAS CONROY
No. C-56494
Signature
EXPIRATION DATE
June 30, 2019
STATE OF CALIFORNIA

CONSULTANT

SHEET TITLE

DEMOLITION PLAN - VOLLEYBALL, FUTSAL, AND P.E. COURTYARDS

PROJECT NAME

COLLEGE OF MARIN ATHLETIC FACILITIES IMPROVEMENTS

PROJECT ADDRESS

835 COLLEGE AVE.
KENTFIELD, CA
94904

SUBMITTAL	DATE
80% CD SUBMITTAL	06/16/17
100% SUBMITTAL	06/30/17

NO.	REVISIONS	DATE

DRAWN BY	CHECKED BY
WD	DC
DATE ISSUED	SCALE 1"= 20'-0"

PROJ. NO. 1702200

SHEET NO. L3.2

ALL IDEAS, DESIGNS, ARRANGEMENTS, AND PLANS INDICATED OR REPRESENTED BY THIS DRAWING ARE OWNED BY AND THE PROPERTY OF VERDE DESIGN, INC. AND WERE CREATED, EVOLVED, AND DEVELOPED FOR USE ON AND IN CONNECTION WITH THE SPECIFIED PROJECT. NONE OF SUCH IDEAS, DESIGNS, ARRANGEMENTS OR PLANS SHALL BE USED, REPRODUCED, OR PUBLISHED BY ANY METHOD, IN WHOLE OR IN PART, OR DISCLOSED TO ANY PERSON, FIRM, OR CORPORATION WITHOUT THE WRITTEN PERMISSION OF VERDE DESIGN, INC.

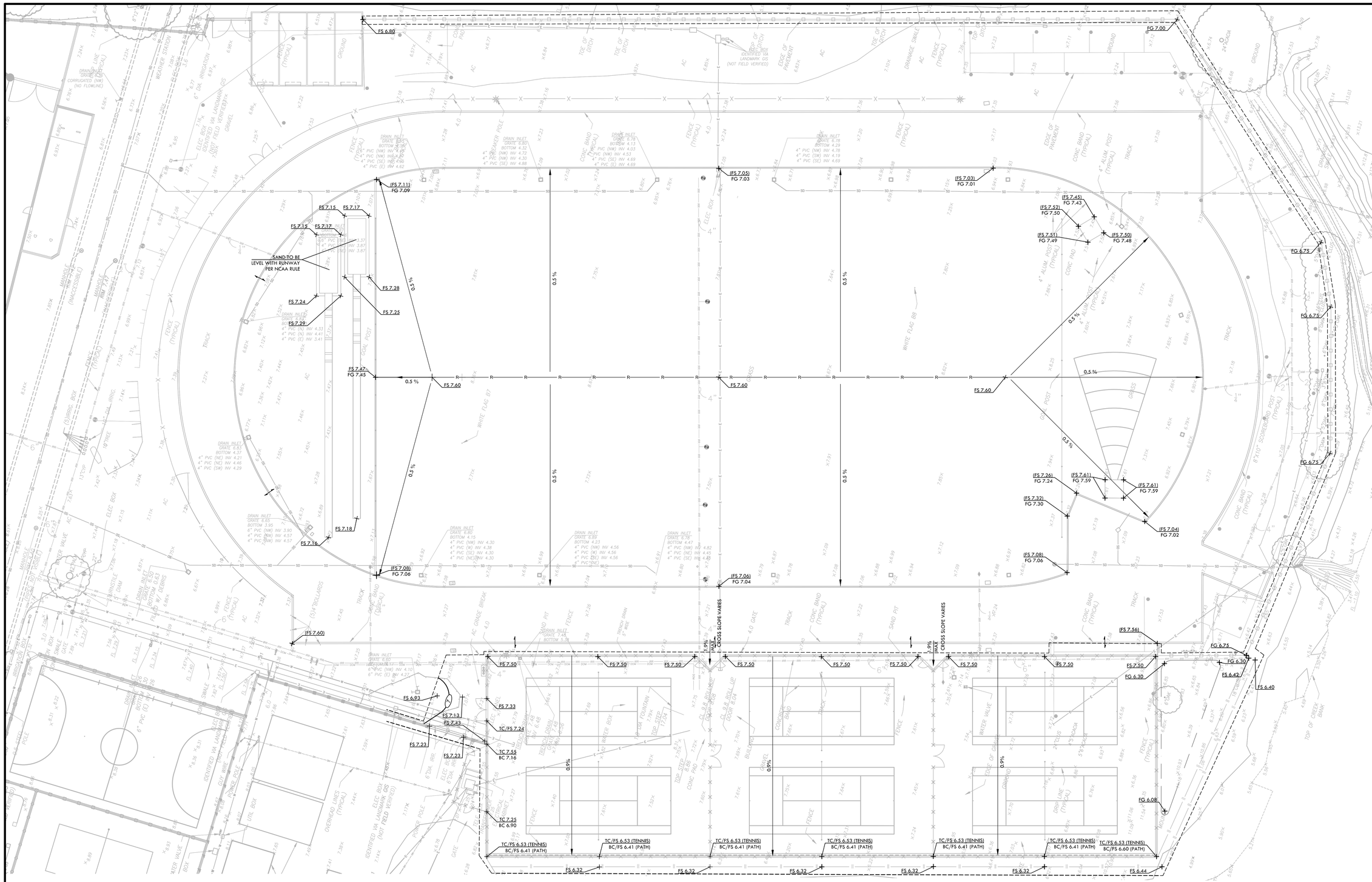

GRADING NOTES

1. EXISTING GRADES ARE BASED ON INFORMATION PROVIDED BY: CSW/ST2 ENGINEERING GROUP, INC.. CONTRACTOR SHALL VERIFY EXISTING GRADES FOR ACCURACY PRIOR TO THE START OF GRADING, NOTIFY THE OWNER'S REPRESENTATIVE IMMEDIATELY SHOULD CONFLICTS ARISE AND REDIRECT WORK TO AVOID DELAY.

2. THE CONTRACTOR SHALL VERIFY THE LOCATIONS OF ALL EXISTING UTILITIES, STRUCTURES AND SERVICES BEFORE COMMENCING WORK. THE LOCATIONS OF UTILITIES, STRUCTURES AND SERVICES SHOWN IN THE CONTRACT DOCUMENTS SHALL BE DEEMED TO BE APPROXIMATIONS ONLY. ALL DISCREPANCIES BETWEEN WHAT IS SHOWN AND THE ACTUAL FIELD CONDITIONS SHALL BE REPORTED TO THE OWNER'S REPRESENTATIVE. THE CONTRACTOR SHALL CONTACT UNDER GROUND SERVICE ALERT (USA) AT (800) 227-2600 PRIOR TO ANY DEMOLITION OR EXCAVATION. UPON COMPLETION OF USA MARKING OPERATIONS, CONTRACTOR SHALL RECORD ALL UTILITY MARKINGS ON A SEPARATE SET OF DRAWINGS. THIS SET SHALL BE KEPT ON-SITE FOR REFERENCE FOR DURATION OF CONTRACT.

3. PROPOSED GRADES SHALL MEET EXISTING GRADES WITH A SMOOTH AND CONTINUOUS TRANSITION SO AS TO AVOID TRAPPING WATER. CONTRACTOR SHALL NOTIFY OWNER'S REPRESENTATIVE IF PUDDLING IS SUSPECTED AND REDIRECT WORK SO AS TO AVOID DELAY WHILE AWAITING RESPONSE.

4. ALL EXISTING DRAINAGE STRUCTURES, BOXES, UTILITY VAULTS ETC. SHALL BE BROUGHT TO FINAL FINISH GRADE PRIOR TO FINAL SURFACE TREATMENT.

GRADING LEGEND

SYM	DESCRIPTION	SYM	DESCRIPTION
8	PROPOSED CONTOUR		CONFORM TO EXISTING GRADE
FG 7.50	PROPOSED FINISH GRADE ELEVATION OF SOFTSCAPE	0.5 %	SLOPE
FS 7.50	PROPOSED FINISH SURFACE ELEVATION OF HARDSCAPE		GRADING CONFORM LINE - CONFORM TO EXISTING GRADE AT THIS LOCATION
SG 7.50	PROPOSED SUBGRADE ELEVATION OF SYNTHETIC TURF		
TW 7.50	TOP OF CURB/WALL		
RIM 7.50	LOW POINT/ RIM ELEVATION OF DRAIN		
R	CROWN OF FIELD, OR RIDGE LINE		
7	EXISTING CONTOUR		
×8.36	EXISTING ELEVATION		

NORTH

0' 10' 20' 40' 60'

VERDE DESIGN
LANDSCAPE ARCHITECTURE
CIVIL ENGINEERING
SPORT PLANNING & DESIGN
2455 The Alameda
Santa Clara, CA 95050
tel: 408.985.7200
fax: 408.985.7260
www.VerdeDesigninc.com

STAMP

REGISTERED PROFESSIONAL ENGINEER
DUSTIN CONROY
No. C-56494
Signature
EXPIRATION DATE
June 30, 2018
STATE OF CALIFORNIA

CONSULTANT

SHEET TITLE

GRADING PLAN - SOCCER /LACROSSE AND TENNIS COURTS

PROJECT NAME

COLLEGE OF MARIN ATHLETIC FACILITIES IMPROVEMENTS

PROJECT ADDRESS

835 COLLEGE AVE.
KENTFIELD, CA
94904

SUBMITTAL	DATE
80% CD SUBMITTAL	06/16/17
100% SUBMITTAL	06/30/17

NO.	REVISIONS	DATE

DRAWN BY	CHECKED BY
KL	DC
DATE ISSUED 06/30/17	SCALE 1"= 20'-0"

PROJ. NO. 1702200

SHEET NO. L4.1

ALL IDEAS, DESIGNS, ARRANGEMENTS, AND PLANS INDICATED OR REPRESENTED BY THIS DRAWING ARE OWNED BY AND THE PROPERTY OF VERDE DESIGN, INC. AND WERE CREATED, EVOLVED, AND DEVELOPED FOR USE ON AND IN CONNECTION WITH THE SPECIFIED PROJECT. NONE OF SUCH IDEAS, DESIGNS, ARRANGEMENTS OR PLANS SHALL BE USED, REPRODUCED, OR PUBLISHED BY ANY METHOD, IN WHOLE OR IN PART, OR DISCLOSED TO ANY PERSON, FIRM, OR

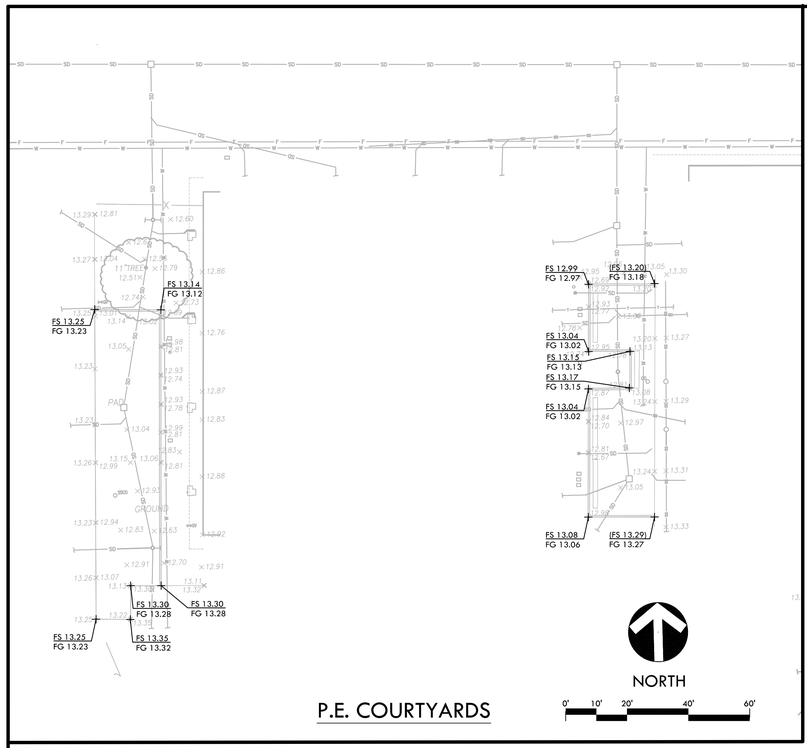

P.E. COURTYARDS

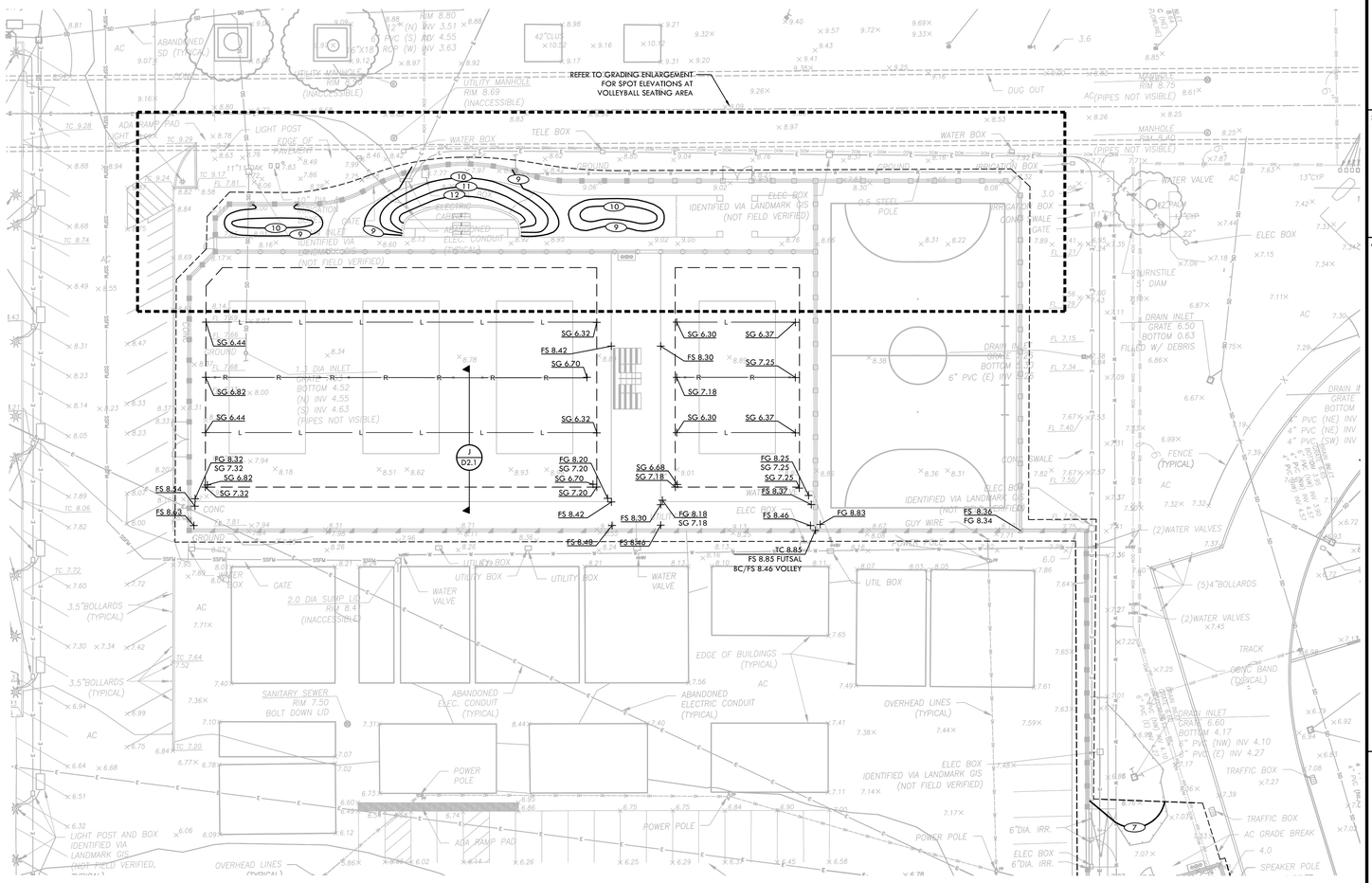

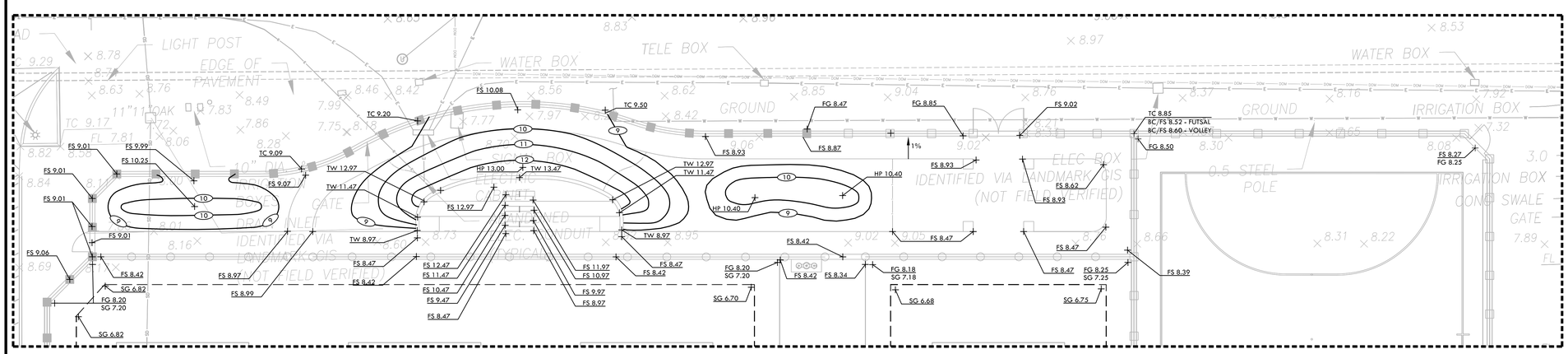

ENLARGEMENT

GRADING NOTES

1. EXISTING GRADES ARE BASED ON INFORMATION PROVIDED BY: CSW/ST2 ENGINEERING GROUP, INC.. CONTRACTOR SHALL VERIFY EXISTING GRADES FOR ACCURACY PRIOR TO THE START OF GRADING, NOTIFY THE OWNER'S REPRESENTATIVE IMMEDIATELY SHOULD CONFLICTS ARISE AND REDIRECT WORK TO AVOID DELAY.
2. THE CONTRACTOR SHALL VERIFY THE LOCATIONS OF ALL EXISTING UTILITIES, STRUCTURES AND SERVICES BEFORE COMMENCING WORK. THE LOCATIONS OF UTILITIES, STRUCTURES AND SERVICES SHOWN IN THE CONTRACT DOCUMENTS SHALL BE DEEMED TO BE APPROXIMATIONS ONLY. ALL DISCREPANCIES BETWEEN WHAT IS SHOWN AND THE ACTUAL FIELD CONDITIONS SHALL BE REPORTED TO THE OWNER'S REPRESENTATIVE. THE CONTRACTOR SHALL CONTACT UNDER GROUND SERVICE ALERT (USA) AT (800) 227-2600 PRIOR TO ANY DEMOLITION OR EXCAVATION. UPON COMPLETION OF USA MARKING OPERATIONS, CONTRACTOR SHALL RECORD ALL UTILITY MARKINGS ON A SEPARATE SET OF DRAWINGS. THIS SET SHALL BE KEPT ON-SITE FOR REFERENCE FOR DURATION OF CONTRACT.
3. PROPOSED GRADES SHALL MEET EXISTING GRADES WITH A SMOOTH AND CONTINUOUS TRANSITION SO AS TO AVOID TRAPPING WATER. CONTRACTOR SHALL NOTIFY OWNER'S REPRESENTATIVE IF PUDDLING IS SUSPECTED AND REDIRECT WORK SO AS TO AVOID DELAY WHILE AWAITING RESPONSE.
4. ALL EXISTING DRAINAGE STRUCTURES, BOXES, UTILITY VAULTS ETC. SHALL BE BROUGHT TO FINAL FINISH GRADE PRIOR TO FINAL SURFACE TREATMENT.

GRADING LEGEND

SYM	DESCRIPTION	SYM	DESCRIPTION
8	PROPOSED CONTOUR	×8.36	EXISTING ELEVATION
FG 7.50	PROPOSED FINISH GRADE ELEVATION OF SOFTSCAPE	L	CONTINUOUS LOW POINT
FS 7.50	PROPOSED FINISH SURFACE ELEVATION OF HARDSCAPE		CONFORM TO EXISTING GRADE
SG 7.50	PROPOSED SUBGRADE ELEVATION OF SYNTHETIC TURF	0.5 %	SLOPE
TW 7.50	TOP OF CURB/WALL		
RIM 7.50	LOW POINT/ RIM ELEVATION OF DRAIN		
RIM 7.50	HIGH POINT OF SOFTSCAPE		
R	CROWN OF FIELD, OR RIDGE LINE		
	EXISTING CONTOUR		

NORTH
0' 10' 20' 40' 60'

VERDE DESIGN
LANDSCAPE ARCHITECTURE
CIVIL ENGINEERING
SPORT PLANNING & DESIGN
2455 The Alameda
Santa Clara, CA 95050
tel: 408.985.7200
fax: 408.985.7260
www.VerdeDesigninc.com

STAMP

REGISTERED PROFESSIONAL ENGINEER — DERYN CONRAD — No. C-56494 — Signature — EXPIRATION DATE June 30, 2019 — STATE OF CALIFORNIA

CONSULTANT

SHEET TITLE
GRADING PLAN - VOLLEYBALL/FUTSAL/ P.E. COURTYARDS

PROJECT NAME
COLLEGE OF MARIN ATHLETIC FACILITIES IMPROVEMENTS

PROJECT ADDRESS
835 COLLEGE AVE.
KENTFIELD, CA
94904

SUBMITTAL	DATE
80% CD SUBMITTAL	06/16/17
100% SUBMITTAL	06/30/17

NO.	REVISIONS	DATE

DRAWN BY	CHECKED BY
JS	DC
DATE ISSUED 06/30/17	SCALE 1"= 20'-0"
PROJ. NO. 1702200	
SHEET NO. L4.2	

ALL IDEAS, DESIGNS, ARRANGEMENTS, AND PLANS INDICATED OR REPRESENTED BY THIS DRAWING ARE OWNED BY AND THE PROPERTY OF VERDE DESIGN, INC. AND WERE CREATED, EVOLVED, AND DEVELOPED FOR USE ON AND IN CONNECTION WITH THE SPECIFIED PROJECT. NONE OF SUCH IDEAS, DESIGNS, ARRANGEMENTS OR PLANS SHALL BE USED, REPRODUCED, OR PUBLISHED BY ANY METHOD, IN WHOLE OR IN PART, OR DISCLOSED TO ANY PERSON, FIRM, OR CORPORATION FOR ANY PURPOSE WHATSOEVER WITHOUT THE WRITTEN PERMISSION OF VERDE DESIGN, INC.

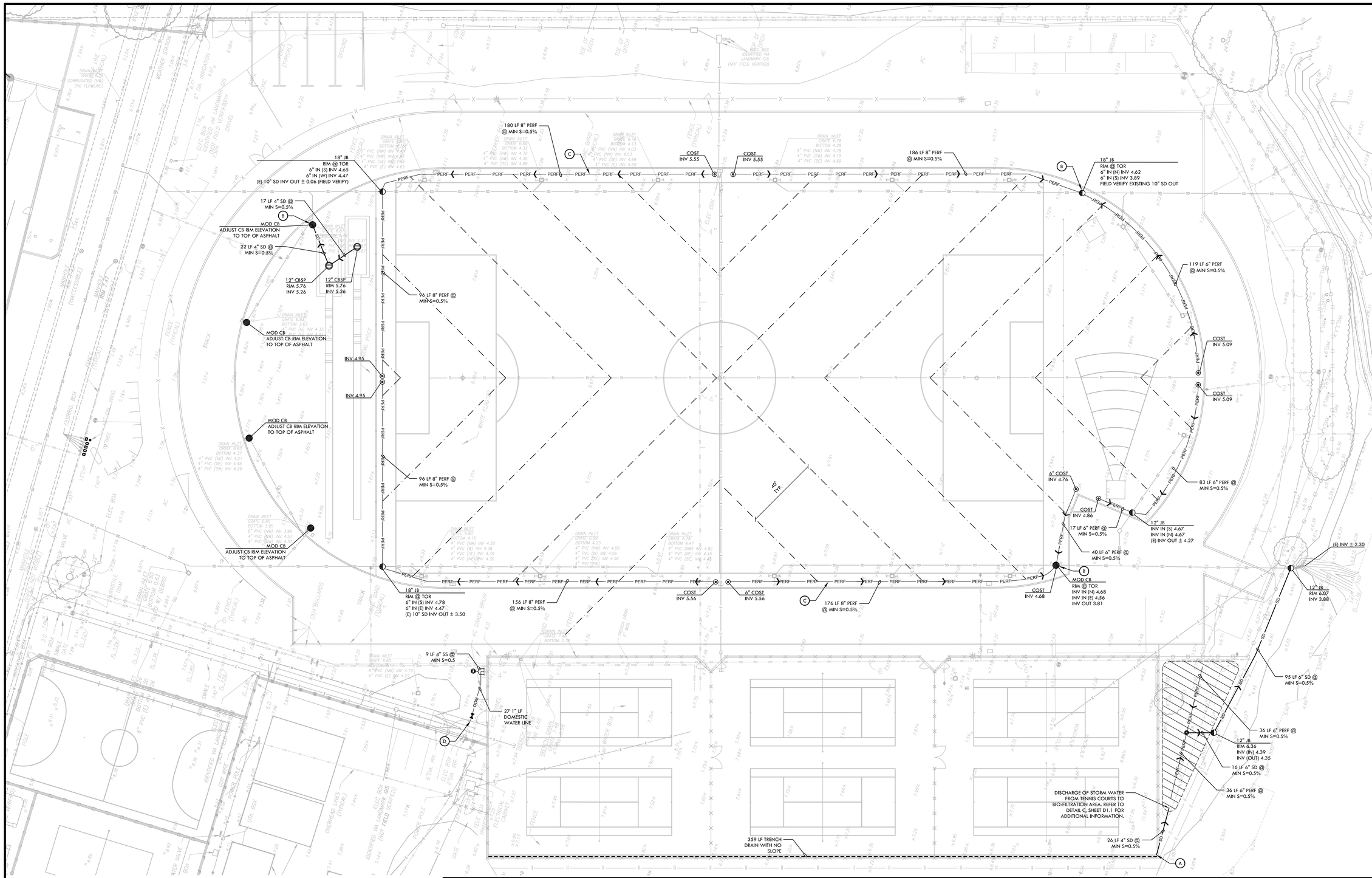

DRAINAGE & UTILITY NOTES

1. THE CONTRACTOR SHALL VERIFY THE LOCATIONS OF ALL EXISTING UTILITIES, STRUCTURES, AND SERVICES BEFORE COMMENCING WORK. THE LOCATIONS OF UTILITIES, STRUCTURES, AND SERVICES SHOWN IN THE CONTRACT DOCUMENTS SHALL BE DEEMED TO BE APPROXIMATIONS ONLY. ALL DISCREPANCIES BETWEEN WHAT IS SHOWN AND THE ACTUAL FIELD CONDITIONS SHALL BE REPORTED TO THE OWNER REPRESENTATIVE. THE CONTRACTOR SHALL CONTACT UNDER GROUND SERVICE ALERT (USA) AT (800) 227-2600 PRIOR TO ANY DEMOLITION OR EXCAVATION. UPON COMPLETION OF USA MARKING OPERATIONS, CONTRACTOR SHALL RECORD ALL UTILITY MARKINGS ON A SEPARATE SET OF DRAWINGS. THIS SET SHALL BE KEPT ON-SITE FOR REFERENCE FOR DURATION OF CONTRACT.
2. ALL EXISTING DRAINAGE STRUCTURES, BOXES, UTILITY VAULTS ETC. TO REMAIN, SHALL BE BROUGHT TO FINAL FINISH GRADE PRIOR TO FINAL SURFACE TREATMENT.
3. THE CONTRACTOR IS TO PROTECT DRAINAGE SYSTEM FROM DEBRIS, INCLUDING SOIL, ROCK MATERIAL, AND TRASH FROM ENTERING THE PIPE DURING CONSTRUCTION. CONTRACTOR SHALL AVOID PLACING CONSTRUCTION VEHICLES OVER INSTALLED DRAINAGE TRENCHES TO PREVENT CRUSHING OF PIPE.
4. COORDINATE ALL SLEEVING AND UTILITY LOCATIONS AS SHOWN ON THE PLANS AND DETAILS CONTAINED WITHIN THESE CONTRACT DOCUMENTS.
5. THE CONTRACTOR IS TO ENSURE THAT ALL REMAINING ACTIVE AND NEW DRAINAGE AND UTILITY LINES ARE PROTECTED AND UNDAMAGED FROM TRENCHING AND FOOTING EXCAVATIONS FOR NEW FOOTINGS, PARTICULARLY FOR NEW FENCING AND WALLS.
6. ALL ABANDONED STORM LINES SHALL REMAIN IN PLACE UNLESS IN CONFLICT WITH PROPOSED DRAINAGE, UTILITY, OR SUBGRADING OPERATIONS, IN WHICH CASE ABANDONED PIPE IN CONFLICT SHALL BE REMOVED. REMAINING ABANDONED STORM PIPE SHALL BE SEALED WITH APPROPRIATELY SIZED CONCRETE CAP (3 SACK MIX) 6" ENVELOPE OUTSIDE AND INSIDE DIAMETER OF PIPE.
7. PRIOR TO ALL DRAINAGE AND UTILITY WORK, CONTRACTOR SHALL BE RESPONSIBLE FOR VERIFYING ALL POTENTIAL DRAINAGE CONNECTIONS AND EXISTING UTILITY BY POTHOLING. IN ADDITION, ALL DOWNSTREAM CONNECTIONS TO EXISTING STRUCTURES SHALL BE THE START OF THESE OPERATIONS, AND GRADES SHALL BE VERIFIED.

DRAINAGE/UTILITY LEGEND

SYM	DESCRIPTION	DTL REF
	CLEANOUT IN SYNTHETIC TURF (COST)	D D1.0
	CATCH BASIN AT SAND PIT (CBSP)	B D1.0
	JUNCTION BOX (JB)	C D1.0
	MODIFIED CATCH BASIN (MOD)	O D1.0
	BIOFILTRATION INLET STANDPIPE OVERFLOW DRAIN	A D1.1
	DOMESTIC WATER VALVE	I D1.0
	ACCESSIBLE DRINKING FOUNTAIN	D,E D1.1
	DRY WELL	H D1.1
SD	STORM DRAIN LINE (SD)	J D1.0
PERF	PERFORATED SUBDRAIN LINE (PERF)	G D1.0

SYM	DESCRIPTION	DTL REF
DOM	DOMESTIC (POTABLE) WATER LINE	E D6.0
SS	SANITARY SEWER LINE (SS)	J D1.0
	FLAT PANEL DRAIN (9,330 LF)	M D1.0
	TRENCH DRAIN AT TENNIS COURTS	K D1.0
	BIO-FILTRATION AREA	A,B D1.1
A	TRENCH DRAIN INLINE CATCH BASIN AND OUTLET AT TENNIS. TIE INTO STORM DRAIN SYSTEM VIA 4" STORM DRAIN LINE.	L D1.0
B	PROPOSED STORM DRAIN POINT OF CONNECTION TO EXISTING SYSTEM. CONTRACTOR TO VERIFY TIE-IN LOCATIONS AND EXISTING INVERTS PRIOR TO DEMOLITION.	
C	TYPICAL FIELD & PIPE SECTION WITH VERTICAL TRENCH	F D1.0
D	TIE IN DOMESTIC WATER LINE TO EXISTING WATER LINE. CONTRACTOR TO VERIFY EXISTING LOCATION ON SITE.	
←	PIPE SLOPE DIRECTION	

SYM	DESCRIPTION	DTL REF
(E)	EXISTING	
TOR	TOP OF ROCK	
LF	LINEAL FEET	
S=0.5%	SLOPE	
MIN.	MINIMUM	
INV	INVERT	

NORTH

0' 10' 20' 40' 60'

VERDE DESIGN
LANDSCAPE ARCHITECTURE
CIVIL ENGINEERING
SPORT PLANNING & DESIGN
2455 The Alameda
Santa Clara, CA 95050
tel: 408.985.7200
fax: 408.985.7260
www.VerdeDesigninc.com

STAMP

REGISTERED PROFESSIONAL ENGINEER
DERTIN CORBETT
No. C-56494
Signature
EXPIRATION DATE
June 30, 2018
STATE OF CALIFORNIA

CONSULTANT

SHEET TITLE

DRAINAGE PLAN
SOCCER/LACROSSE
AND TENNIS COURTS

PROJECT NAME

COLLEGE OF MARIN
ATHLETIC FACILITIES
IMPROVEMENTS

PROJECT ADDRESS

835 COLLEGE AVE.
KENTFIELD, CA
94904

SUBMITTAL	DATE
80% CD SUBMITTAL	06/16/17
100% SUBMITTAL	06/30/17

NO.	REVISIONS	DATE

DRAWN BY	CHECKED BY
BH	DC
DATE ISSUED 06/30/17	SCALE 1"= 20'-0"

PROJ. NO. 1702200

SHEET NO. L5.1

ALL IDEAS, DESIGNS, ARRANGEMENTS, AND PLANS INDICATED OR REPRESENTED BY THIS DRAWING ARE OWNED BY AND THE PROPERTY OF VERDE DESIGN, INC. AND WERE CREATED, EVOLVED, AND DEVELOPED FOR USE ON AND IN CONNECTION WITH THE SPECIFIED PROJECT. NONE OF SUCH IDEAS, DESIGNS, ARRANGEMENTS OR PLANS SHALL BE USED, REPRODUCED, OR PUBLISHED BY ANY METHOD, IN WHOLE OR IN PART, OR DISCLOSED TO ANY PERSON, FIRM, OR CORPORATION WITHOUT WRITTEN PERMISSION OF VERDE DESIGN, INC.

DRAINAGE PLAN - SOCCER/LACROSSE AND TENNIS COURTS

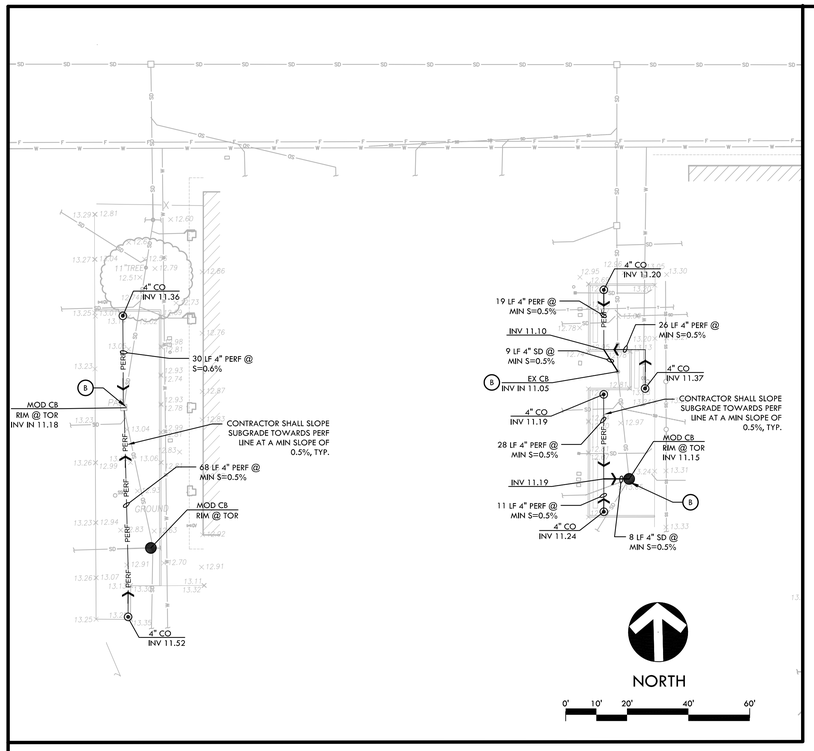

P.E. COURTYARDS

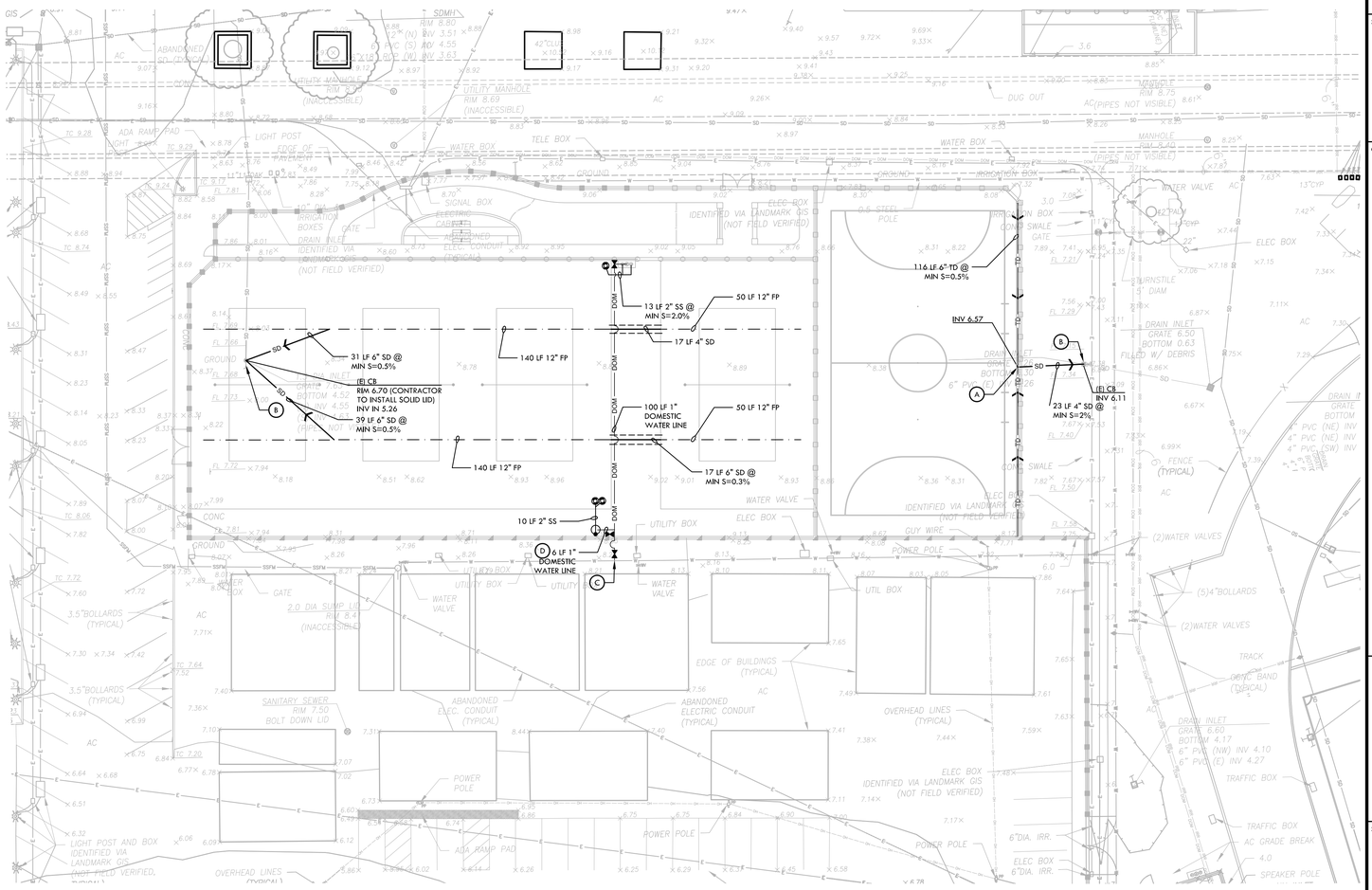

DRAINAGE & UTILITY NOTES

1. THE CONTRACTOR SHALL VERIFY THE LOCATIONS OF ALL EXISTING UTILITIES, STRUCTURES, AND SERVICES BEFORE COMMENCING WORK. THE LOCATIONS OF UTILITIES, STRUCTURES, AND SERVICES SHOWN IN THE CONTRACT DOCUMENTS SHALL BE DEEMED TO BE APPROXIMATIONS ONLY. ALL DISCREPANCIES BETWEEN WHAT IS SHOWN AND THE ACTUAL FIELD CONDITIONS SHALL BE REPORTED TO THE OWNER REPRESENTATIVE. THE CONTRACTOR SHALL CONTACT UNDER GROUND SERVICE ALERT (USA) AT (800) 227-2600 PRIOR TO ANY DEMOLITION OR EXCAVATION. UPON COMPLETION OF USA MARKING OPERATIONS, CONTRACTOR SHALL RECORD ALL UTILITY MARKINGS ON A SEPARATE SET OF DRAWINGS. THIS SET SHALL BE KEPT ON-SITE FOR REFERENCE FOR DURATION OF CONTRACT.
2. ALL EXISTING DRAINAGE STRUCTURES, BOXES, UTILITY VAULTS ETC. TO REMAIN, SHALL BE BROUGHT TO FINAL FINISH GRADE PRIOR TO FINAL SURFACE TREATMENT.
3. THE CONTRACTOR IS TO PROTECT DRAINAGE SYSTEM FROM DEBRIS, INCLUDING SOIL, ROCK MATERIAL, AND TRASH FROM ENTERING THE PIPE DURING CONSTRUCTION. CONTRACTOR SHALL AVOID PLACING CONSTRUCTION VEHICLES OVER INSTALLED DRAINAGE TRENCHES TO PREVENT CRUSHING OF PIPE.
4. COORDINATE ALL SLEEVING AND UTILITY LOCATIONS AS SHOWN ON THE PLANS AND DETAILS CONTAINED WITHIN THESE CONTRACT DOCUMENTS.
5. THE CONTRACTOR IS TO ENSURE THAT ALL REMAINING ACTIVE AND NEW DRAINAGE AND UTILITY LINES ARE PROTECTED AND UNDAMAGED FROM TRENCHING AND FOOTING EXCAVATIONS FOR NEW FOOTINGS, PARTICULARLY FOR NEW FENCING AND WALLS.
6. ALL ABANDONED STORM LINES SHALL REMAIN IN PLACE UNLESS IN CONFLICT WITH PROPOSED DRAINAGE, UTILITY, OR SUBGRADING OPERATIONS, IN WHICH CASE ABANDONED PIPE IN CONFLICT SHALL BE REMOVED. REMAINING ABANDONED STORM PIPE SHALL BE SEALED WITH APPROPRIATELY SIZED CONCRETE CAP (3 SACK MIX) 6" ENVELOPE OUTSIDE AND INSIDE DIAMETER OF PIPE.
7. PRIOR TO ALL DRAINAGE AND UTILITY WORK, CONTRACTOR SHALL BE RESPONSIBLE FOR VERIFYING ALL POTENTIAL DRAINAGE CONNECTIONS AND EXISTING UTILITY BY POTHOLING. IN ADDITION, ALL DOWNSTREAM CONNECTIONS TO EXISTING STRUCTURES SHALL BE THE START OF THESE OPERATIONS, AND GRADES SHALL BE VERIFIED.

DRAINAGE/UTILITY LEGEND

SYM	DESCRIPTION	DTL REF
	CLEANOUT IN SYNTHETIC TURF (COST)	D D1.0
	CLEANOUT IN SAND (CO)	E D1.0
	MODIFIED CATCH BASIN (MOD)	O D1.0
	JUNCTION BOX (JB)	J D1.1
	DOMESTIC WATER VALVE	I D1.0
	DRY WELL	I D1.1 / H D1.1
SD	SOLID WALL STORM DRAIN LINE (SD)	J D1.0
PERF	PERFORATED SUBDRAIN LINE (PERF)	G D1.0
DOM	DOMESTIC WATER	E D6.0
SS	SANITARY SEWER LINE (SS)	J D1.0

SYM	DESCRIPTION	DTL REF
TD	TRENCH DRAIN AT FUTSAL	R D1.0
	FLAT PANEL DRAIN (FP)	M D1.0
DOM	ACCESSIBLE DRINKING FOUNTAIN	D,E D1.1
•	8" x 8" OUTDOOR SHOWER DRAIN, REFER TO SPECIFICATIONS FOR ADDITIONAL INFORMATION.	K D1.1
	SLEEVE - CLASS 200 PVC. SIZE TO BE MIN. TWO TIMES THE TOTAL OF PIPE DIAMETER INSIDE SLEEVE	
A	TRENCH DRAIN INLINE CATCH BASIN AND OUTLET AT SYNTHETIC TURF. TIE INTO STORM DRAIN SYSTEM VIA 4" STORM DRAIN LINE.	N D1.0
B	PROPOSED STORM DRAIN POINT OF CONNECTION TO EXISTING SYSTEM. CONTRACTOR TO VERIFY TIE-IN LOCATIONS AND EXISTING INVERTS PRIOR TO DEMOLITION.	
C	TIE IN DOMESTIC WATER LINE TO EXISTING WATER LINE. CONTRACTOR TO VERIFY EXISTING LOCATION ON SITE.	
D	TIE IN DOMESTIC WATER LINE TO NEW OUTDOOR SHOWER	
←	PIPE SLOPE DIRECTION	

SYM	DESCRIPTION
LF	LINEAL FEET
(E)	EXISTING
MIN.	MINIMUM
TOR	TOP OF ROCK
INV	INVERT
S=0.5%	SLOPE

VERDE DESIGN
LANDSCAPE ARCHITECTURE
CIVIL ENGINEERING
SPORT PLANNING & DESIGN
2455 The Alameda
Santa Clara, CA 95050
tel: 408.985.7200
fax: 408.985.7260
www.VerdeDesigninc.com

STAMP

REGISTERED PROFESSIONAL ENGINEER
DUSTIN CONROY
No. C-56494
Signature
EXPIRATION DATE
June 30, 2019
STATE OF CALIFORNIA

CONSULTANT

SHEET TITLE
DRAINAGE PLAN - VOLLEYBALL/FUTSAL/ P.E. COURTYARDS

PROJECT NAME
COLLEGE OF MARIN ATHLETIC FACILITIES IMPROVEMENTS

PROJECT ADDRESS
835 COLLEGE AVE.
KENTFIELD, CA
94904

SUBMITTAL	DATE
80% CD SUBMITTAL	06/16/17
100% SUBMITTAL	06/30/17

NO.	REVISIONS	DATE

DRAWN BY	CHECKED BY
KL	DC
DATE ISSUED 06/30/17	SCALE 1"= 20'-0"

PROJ. NO. 1702200

SHEET NO. L5.2

ALL IDEAS, DESIGNS, ARRANGEMENTS, AND PLANS INDICATED OR REPRESENTED BY THIS DRAWING ARE OWNED BY AND THE PROPERTY OF VERDE DESIGN, INC. AND WERE CREATED, EVOLVED, AND DEVELOPED FOR USE ON AND IN CONNECTION WITH THE SPECIFIED PROJECT. NONE OF SUCH IDEAS, DESIGNS, ARRANGEMENTS, AND PLANS SHALL BE USED, REPRODUCED, OR PUBLISHED BY ANY METHOD, IN WHOLE OR IN PART, OR DISCLOSED TO ANY PERSON, FIRM, OR CORPORATION FOR ANY PURPOSE WHATSOEVER WITHOUT THE WRITTEN PERMISSION OF VERDE DESIGN, INC.

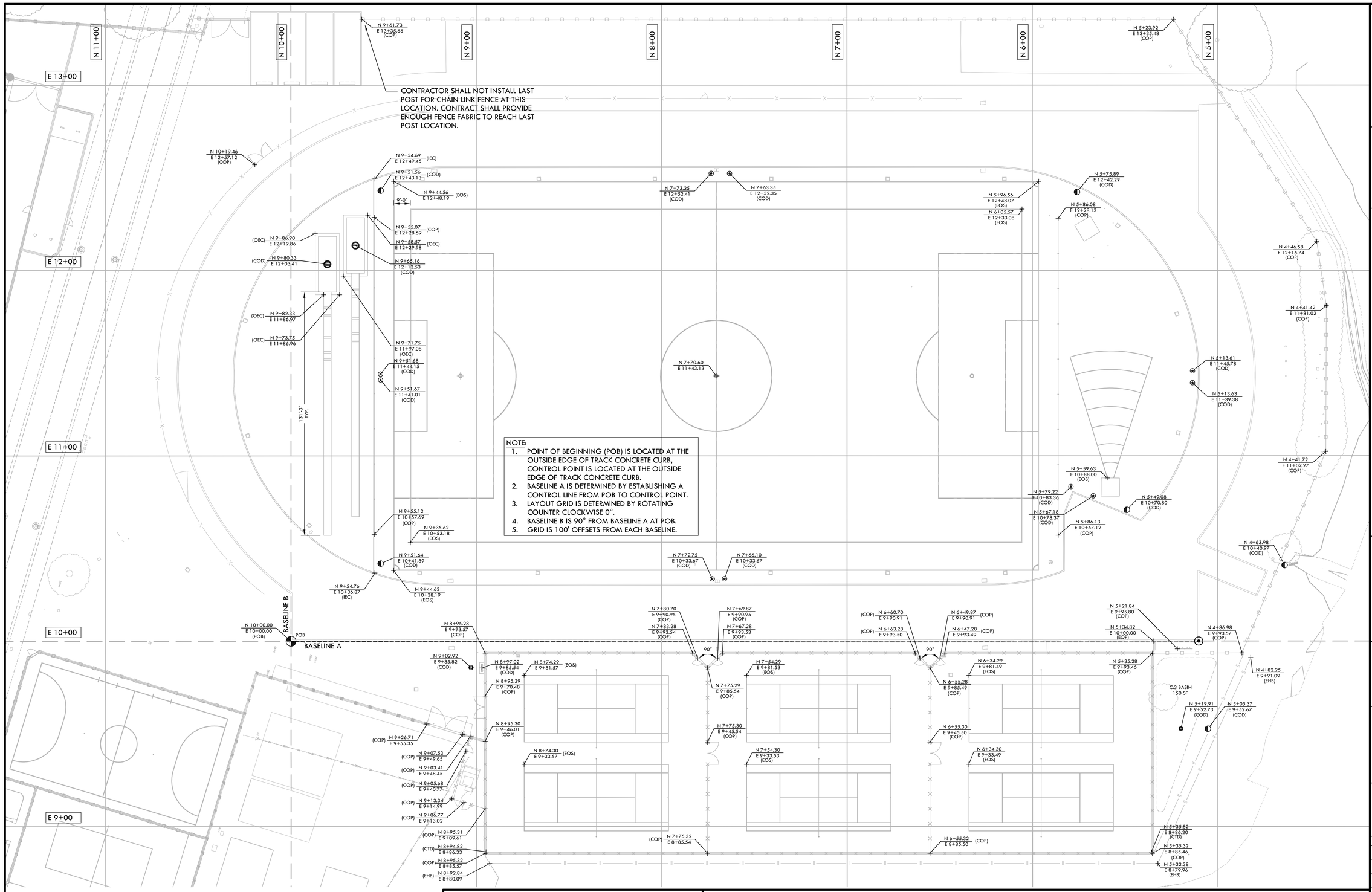

NOTE:
1. POINT OF BEGINNING (POB) IS LOCATED AT THE OUTSIDE EDGE OF TRACK CONCRETE CURB, CONTROL POINT IS LOCATED AT THE OUTSIDE EDGE OF TRACK CONCRETE CURB.
2. BASELINE A IS DETERMINED BY ESTABLISHING A CONTROL LINE FROM POB TO CONTROL POINT.
3. LAYOUT GRID IS DETERMINED BY ROTATING COUNTER CLOCKWISE 0°.
4. BASELINE B IS 90° FROM BASELINE A AT POB.
5. GRID IS 100' OFFSETS FROM EACH BASELINE.

LAYOUT NOTES

1. THE CONTRACTOR SHALL COORDINATE ALL CONSTRUCTION ELEMENTS INCLUDING UTILITY LOCATIONS AND REQUIRED SLEEVING PRIOR TO INSTALLATION. VERIFY CRITICAL DIMENSIONS, REFERENCE POINT LOCATIONS AND CONSTRUCTION CONDITIONS PRIOR TO INITIATING CONSTRUCTION. TEMPORARY BENCHMARKS OR REFERENCE POINTS SHALL BE SET BY THE CONTRACTOR AS NECESSARY. NOTIFY THE OWNER'S REPRESENTATIVE IMMEDIATELY SHOULD DISCREPANCY ARISE AND REDIRECT WORK TO AVOID DELAYS.
2. ALL DIMENSIONS SHALL BE VERIFIED IN FIELD AND CHALKED, STRING LINED OR FLAGGED BY THE CONTRACTOR PRIOR TO CONSTRUCTION. ANY MINOR ADJUSTMENTS MADE TO ACHIEVE OVERALL DESIGN LAYOUT SHALL BE ACCEPTED BY THE OWNER PRIOR TO CONSTRUCTION.
3. LAYOUT IS BASED ON THE POINT(S) OF BEGINNING (P.O.B.) AND BASELINE(S) OR GRID SYSTEM AS SHOWN. DIMENSIONS SHOWN ARE ROUNDED TO THE NEAREST INCH.
4. ALL LAYOUT AND GRADES SHALL BE COMPLETED BY A LICENSED SURVEYOR.

NORTH

0' 10' 20' 40' 60'

LAYOUT LEGEND

SYM	DESCRIPTION	SYM	DESCRIPTION	SYM	DESCRIPTION
POB	POINT OF BEGINNING SYMBOL	(POB)	POINT OF BEGINNING	(EOP)	EDGE OF PAVEMENT
	CONTROL POINT	(COP)	CENTER OF POST	(EHB)	EDGE OF HEADER BOARD
	RADIUS POINT / CENTER MARK	(RAD)	RADIUS POINT		
90°	PROPOSED ANGLE BETWEEN ELEMENTS	(TAN)	TANGENT POINT		
ALIGN	ALIGN EDGES OF ELEMENTS	(COD)	CENTER OF DRAIN/CLEANOUT		
	BASELINE & GRID	(CTD)	CENTER OF TRENCH DRAIN		
	CONTROL LINE	(IEC)	INSIDE EDGE OF CURB		
	CENTER LINES	(OEC)	OUTSIDE EDGE OF CURB		
N 12+21.95 E 12+97.08	NORTHING/EASTING LAYOUT COORDINATE CALLOUT	(EOS)	EDGE OF STRIPING		

ALL IDEAS, DESIGNS, ARRANGEMENTS, AND PLANS INDICATED OR REPRESENTED BY THIS DRAWING ARE OWNED BY AND THE PROPERTY OF VERDE DESIGN, INC. AND WERE CREATED, EVOLVED, AND DEVELOPED FOR USE ON AND IN CONNECTION WITH THE SPECIFIED PROJECT. NONE OF SUCH IDEAS, DESIGNS, ARRANGEMENTS, AND PLANS SHALL BE USED, REPRODUCED, OR PUBLISHED BY ANY METHOD, IN WHOLE OR IN PART, OR DISCLOSED TO ANY PERSON, FIRM, OR CORPORATION FOR ANY PURPOSE WHATSOEVER WITHOUT THE WRITTEN PERMISSION OF VERDE DESIGN, INC.

VERDE DESIGN
LANDSCAPE ARCHITECTURE
CIVIL ENGINEERING
SPORT PLANNING & DESIGN
2455 The Alameda
Santa Clara, CA 95050
tel: 408.985.7200
fax: 408.985.7260
www.VerdeDesigninc.com

STAMP

REGISTERED PROFESSIONAL ENGINEER
DERTIN CONROY
No. C-56494
Signature
EXPIRATION DATE
June 30, 2018
STATE OF CALIFORNIA

CONSULTANT

SHEET TITLE
LAYOUT PLAN - SOCCER/LACROSSE AND TENNIS COURTS

PROJECT NAME
COLLEGE OF MARIN ATHLETIC FACILITIES IMPROVEMENTS

PROJECT ADDRESS
835 COLLEGE AVE.
KENTFIELD, CA
94904

SUBMITTAL	DATE
80% CD SUBMITTAL	06/16/17
100% SUBMITTAL	06/30/17

NO.	REVISIONS	DATE

DRAWN BY KL	CHECKED BY DC
DATE ISSUED 06/30/17	SCALE 1"= 20'-0"
PROJ. NO. 1702200	
SHEET NO. L6.1	

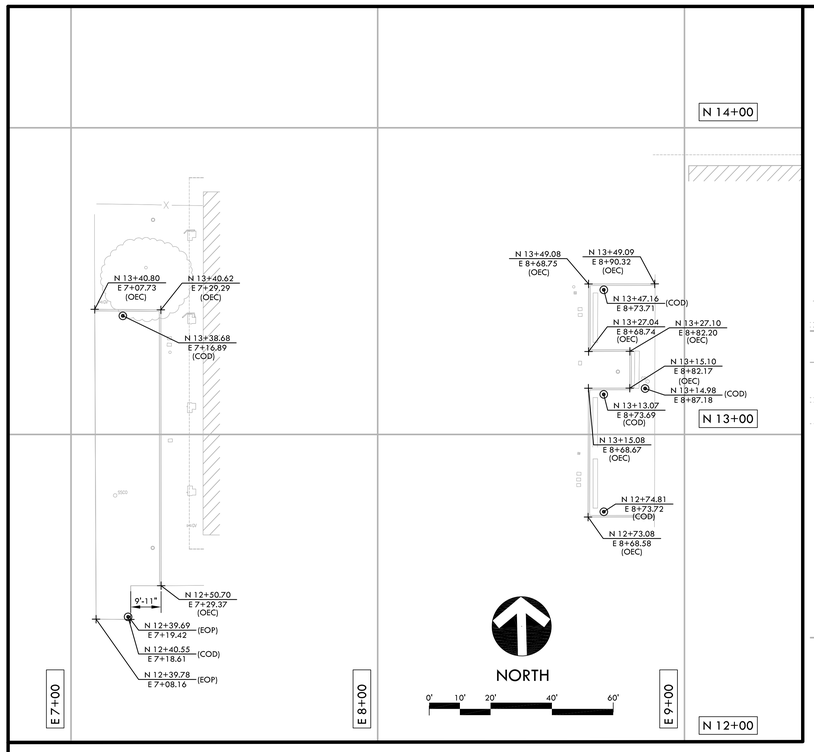

P.E. COURTYARDS

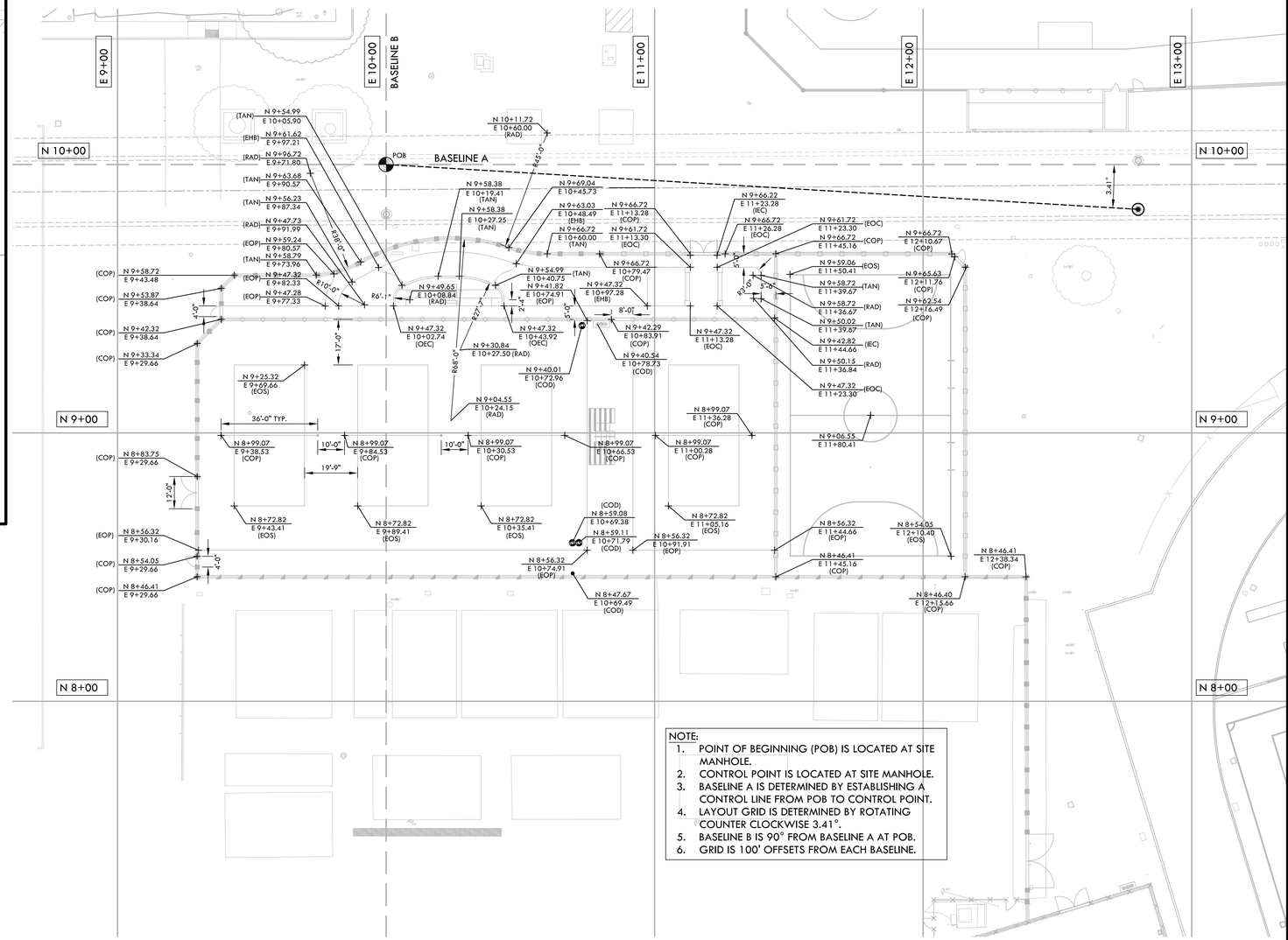

NOTE:
1. POINT OF BEGINNING (POB) IS LOCATED AT SITE MANHOLE.
2. CONTROL POINT IS LOCATED AT SITE MANHOLE.
3. BASELINE A IS DETERMINED BY ESTABLISHING A CONTROL LINE FROM POB TO CONTROL POINT.
4. LAYOUT GRID IS DETERMINED BY ROTATING COUNTER CLOCKWISE 3.41°.
5. BASELINE B IS 90° FROM BASELINE A AT POB.
6. GRID IS 100' OFFSETS FROM EACH BASELINE.

LAYOUT NOTES

1. THE CONTRACTOR SHALL COORDINATE ALL CONSTRUCTION ELEMENTS INCLUDING UTILITY LOCATIONS AND REQUIRED SLEEVING PRIOR TO INSTALLATION. VERIFY CRITICAL DIMENSIONS, REFERENCE POINT LOCATIONS AND CONSTRUCTION CONDITIONS PRIOR TO INITIATING CONSTRUCTION. TEMPORARY BENCHMARKS OR REFERENCE POINTS SHALL BE SET BY THE CONTRACTOR AS NECESSARY. NOTIFY THE OWNER'S REPRESENTATIVE IMMEDIATELY SHOULD DISCREPANCY ARISE AND REDIRECT WORK TO AVOID DELAYS.
2. ALL DIMENSIONS SHALL BE VERIFIED IN FIELD AND CHALKED, STRING LINED OR FLAGGED BY THE CONTRACTOR PRIOR TO CONSTRUCTION. ANY MINOR ADJUSTMENTS MADE TO ACHIEVE OVERALL DESIGN LAYOUT SHALL BE ACCEPTED BY THE OWNER PRIOR TO CONSTRUCTION.
3. LAYOUT IS BASED ON THE POINT(S) OF BEGINNING (P.O.B.) AND BASELINE(S) OR GRID SYSTEM AS SHOWN. DIMENSIONS SHOWN ARE ROUNDED TO THE NEAREST INCH.
4. ALL LAYOUT AND GRADES SHALL BE COMPLETED BY A LICENSED SURVEYOR.

NORTH
0' 10' 20' 40' 60'

LAYOUT LEGEND

SYM	DESCRIPTION	SYM	DESCRIPTION
POB	POINT OF BEGINNING SYMBOL	(POB)	POINT OF BEGINNING
	CONTROL POINT	(COP)	CENTER OF POST
	RADIUS POINT / CENTER MARK	(RAD)	RADIUS POINT
20%	PROPOSED ANGLE BETWEEN ELEMENTS	(TAN)	TANGENT POINT
ALIGN	ALIGN EDGES OF ELEMENTS	(COD)	CENTER OF DRAIN/CLEANOUT
	BASELINE & GRID	(IEC)	INSIDE EDGE OF CURB
	CONTROL LINE	(OEC)	OUTSIDE EDGE OF CURB
	CENTER LINES	(EOP)	EDGE OF PAVEMENT
N 12+21.95 E 12+97.08	NORTHING/EASTING LAYOUT COORDINATE CALLOUT	(EOS)	EDGE OF STRIPING
		(EOC)	EDGE OF COLUMN
		(EHB)	EDGE OF HEADER BOARD

VERDE DESIGN
LANDSCAPE ARCHITECTURE
CIVIL ENGINEERING
SPORT PLANNING & DESIGN
2455 The Alameda
Santa Clara, CA 95050
tel: 408.985.7200
fax: 408.985.7260
www.VerdeDesigninc.com

STAMP

REGISTERED PROFESSIONAL ENGINEER
DERTIN CORBETT
No. C-56494
Signature
EXPIRATION DATE
June 30, 2019
STATE OF CALIFORNIA

CONSULTANT

SHEET TITLE
LAYOUT PLAN - VOLLEYBALL/FUTSAL/ P.E. COURTYARDS

PROJECT NAME
COLLEGE OF MARIN ATHLETIC FACILITIES IMPROVEMENTS

PROJECT ADDRESS
835 COLLEGE AVE.
KENTFIELD, CA
94904

SUBMITTAL	DATE
80% CD SUBMITTAL	06/16/17
100% SUBMITTAL	06/30/17

NO.	REVISIONS	DATE

DRAWN BY	CHECKED BY
KL	DC
DATE ISSUED 06/30/17	SCALE 1"= 20'-0"

PROJ. NO. 1702200

SHEET NO. L6.2

ALL IDEAS, DESIGNS, ARRANGEMENTS, AND PLANS INDICATED OR REPRESENTED BY THIS DRAWING ARE OWNED BY AND THE PROPERTY OF VERDE DESIGN, INC. AND WERE CREATED, EVOLVED, AND DEVELOPED FOR USE ON AND IN CONNECTION WITH THE SPECIFIED PROJECT. NONE OF SUCH IDEAS, DESIGNS, ARRANGEMENTS OR PLANS SHALL BE USED, REPRODUCED, OR PUBLISHED BY ANY METHOD, IN WHOLE OR IN PART, OR DISCLOSED TO ANY PERSON, FIRM, OR CORPORATION FOR ANY PURPOSE WHATSOEVER WITHOUT THE WRITTEN PERMISSION OF VERDE DESIGN, INC.

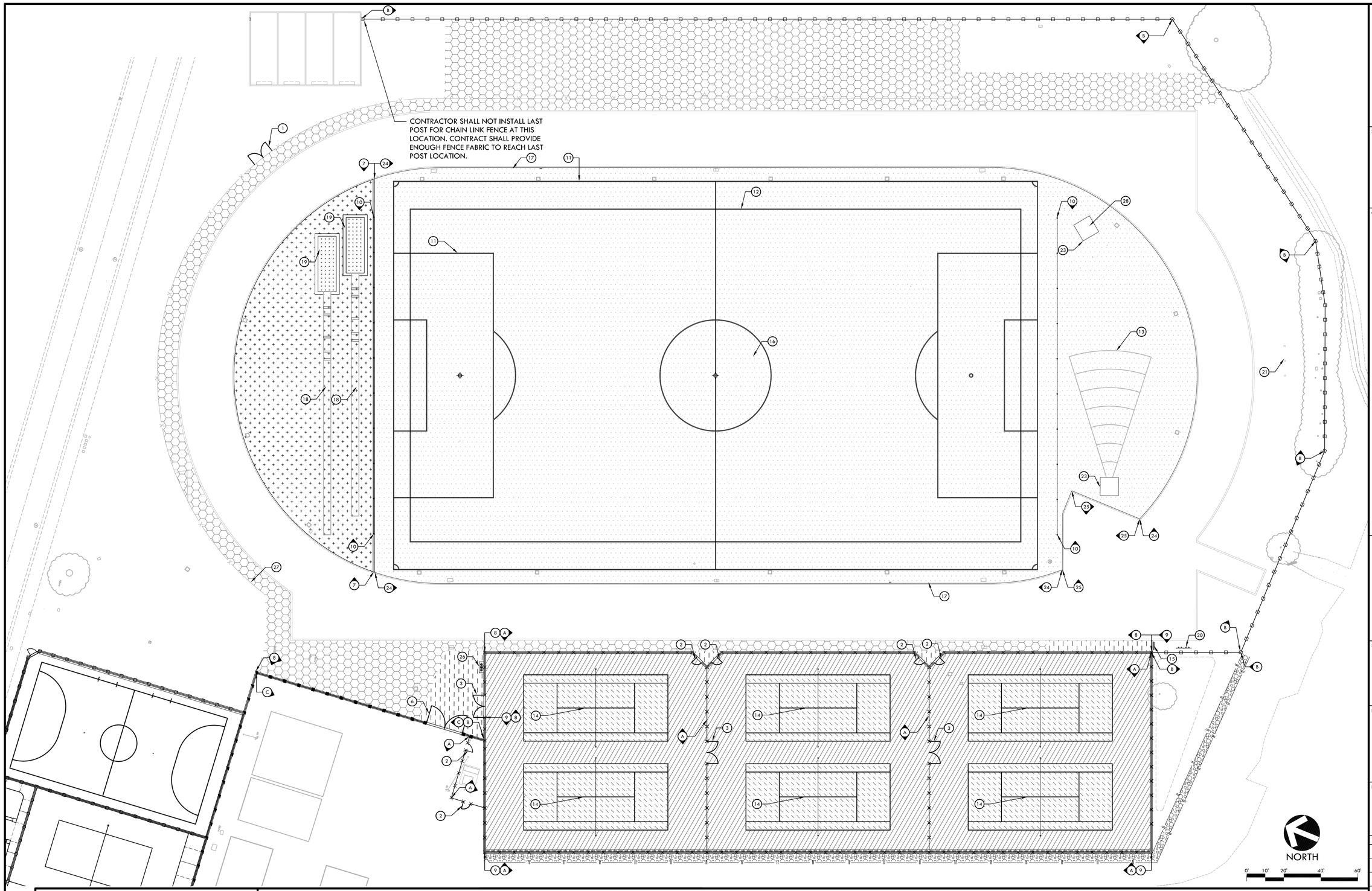

MATERIAL NOTES

1. THE CONTRACTOR SHALL COORDINATE ALL CONSTRUCTION ELEMENTS INCLUDING UTILITY LOCATIONS AND REQUIRED SLEEVING PRIOR TO INSTALLATION. VERIFY CRITICAL DIMENSIONS, REFERENCE POINT LOCATIONS AND CONSTRUCTION CONDITIONS PRIOR TO INITIATING CONSTRUCTION. TEMPORARY BENCHMARKS OR REFERENCE POINTS SHALL BE SET BY THE CONTRACTOR AS NECESSARY. NOTIFY THE OWNER'S REPRESENTATIVE IMMEDIATELY SHOULD DISCREPANCY ARISE AND REDIRECT WORK TO AVOID DELAYS.
2. THE INTERFACE OF ALL PROPOSED IMPROVEMENTS TO EXISTING SITE SHALL CONFORM AND BE SMOOTH AND UNIFORM.
3. ALL REINFORCING AND FORMS SHALL BE SECURED IN PLACE AND ACCEPTED BY OWNER'S REPRESENTATIVE PRIOR TO PLACING ANY CONCRETE.
4. CONCRETE FINISHES SHALL BE AS NOTED. CONTRACTOR SHALL PROVIDE 4'X4' SAMPLES OF ALL SPECIFIED FINISHES OF CONCRETE USING THE SAME MATERIALS THAT WILL BE USED IN THE ACTUAL CONSTRUCTION FOR EACH TYPE SPECIFIED. SAMPLES SHALL BE PREPARED WELL ENOUGH IN ADVANCE OF SCHEDULED CONCRETE POUR TO ALLOW FOR REVIEW AND POSSIBLE RE-POURING OF UNACCEPTABLE SAMPLES. UNACCEPTABLE SAMPLES SHALL BE RE-PREPARED UNTIL ACCEPTED BY THE OWNER'S REPRESENTATIVE. ACCEPTED SAMPLES SHALL BE PROTECTED AND REMAIN ON SITE FOR REFERENCE UNTIL FINAL ACCEPTANCE.
5. ALL FENCES AND GATES SHOWN ON PLAN ARE GRAPHIC REPRESENTATIONS; REFER TO DETAILS AND SPECIFICATIONS FOR PRECISE LOCATION.
6. ASPHALT SHALL NOT BE INSTALLED UNTIL ALL EDGES AND SITE FURNISHING PADS ARE INSTALLED.

MATERIAL LEGEND

SYM	DESCRIPTION	DTL REF
	SYNTHETIC TURF (OWNER INSTALLED)	P D2.0
	ALL-WEATHER SYNTHETIC TRACK SURFACE	O D2.0
	TENNIS COURT SURFACING - GREEN	M D2.0
	TENNIS COURT SURFACING - BLUE	M D2.0
	ASPHALT PAVING - PEDESTRIAN	K D2.0
	SLURRY COAT ON THE SURFACE OF EXISTING ASPHALT PAVING, REFER TO SPECIFICATIONS	
	4" THICK SECTION CLASS II BASE ROCK , REFER TO SPECIFICATIONS	
	SAND PIT SAND - OWNER TO PROVIDE SAND FOR STOCKPILE MATERIAL ON SITE. CONTRACTOR TO PROVIDE ADDITIONAL MATERIAL AS NEEDED TO BRING SAND TO TOP OF PIT (UP TO 5 CUBIC YARDS PER PIT)	

SYM	DESCRIPTION	DTL REF
	PLANTING AREA, REFER TO PLANTING PLAN	
	HEADER BOARD	M D2.1
A	10' TALL CHAIN LINK FENCE IN 12" WIDE EDGEBAND OR TALL CURB	G D3.0
C	8' TALL ORNAMENTAL FENCINIG IN 12" WIDE EDGEBAND	A D3.1
B	8' TALL CHAIN LINK FENCE IN 12" WIDE EDGEBAND	E D3.0
B	8' TALL CHAIN LINK FENCE	I D3.1
A	10' TALL CHAIN LINK FENCE	G D3.0
1	42" TALL X 12' WIDE DOUBLE SWING CHAIN LINK GATE	I D3.0
2	10' TALL X 4' WIDE SWING CHAIN LINK GATE	O D3.0

SYM	DESCRIPTION	DTL REF
3	10' TALL X 12' WIDE DOUBLE SWING CHAIN LINK GATE	M D3.0
4	NOT USED	
5	NOT USED	
6	8' TALL X 20' WIDE DOUBLE SWING ORNAMENTAL GATE	G D3.1
7	9" WIDE EDGEBAND AT SYNTHETIC TURF EDGE	F D2.0
8	12" WIDE EDGEBAND IN FENCE	C D2.0
9	CURB TYPE 1	B D2.0
10	LACROSSE NETTING SYSTEM	E D4.0
11	SOCCER STRIPING (REFERENCE ONLY)	D D4.0

SYM	DESCRIPTION	DTL REF
12	LACROSSE STRIPING (REFERENCE ONLY)	
13	SHOT PUT STRIPING (REFERENCE ONLY)	G,H D4.0
14	TENNIS COURTS LAYOUT	M D4.0
15	INFORMATION SIGN (OWNER FURNISHED -SALVAGED MATERIAL)	J D4.0
16	MID-FIELD LOGO	H D4.0
17	SIDE LINE LETTERING	C D5.1
18	LONG JUMP/TRIPLE JUMP	D D5.1
19	SAND PIT WITH SAND CATCHERS	K D4.0
20	PULL-UP BARS	K D3.1

SYM	DESCRIPTION	DTL REF
21	SCOREBOARD, REFER TO SPECIFICATIONS	
22	NOT USED	
23	SYNTHETIC TURF CONNECTION AT EXISTING THICKENED CONCRETE EDGE (DISCUS, SHOT PUT)	S D2.0
24	SYNTHETIC TURF CONNECTION AT EXISTING TRACK EDGE (TRENCH DRAIN)	R D2.0
25	SYNTHETIC TURF CONNECTION AT EXISTING TRACK EDGE (CURB)	R D2.0
26	DRINKING FOUNTAIN	F D1.1
27	SIGN - TYPE 1	L D3.1
28	EXISTING DISCUS CAGE. IF ADDITIONAL CONCRETE IS NEEDED AROUND DISCUS CAGE POLES TO RAISE GRADES TO NEW FINISH SURFACE ELEVATION OR TO ATTACHED SYNTHETIC TURF TO, CONTRACTOR SHALL INSTALL A 4" WIDE BAND AROUND DISCUS POLES. CONTRACTOR SHALL INSTALL A FIBEROUS MATERIAL IN BETWEEN CONCRETE AND DISCUS POLES TO ENSURE POLES CAN STILL BE REMOVED FROM SLEEVES.	

VERDE DESIGN
LANDSCAPE ARCHITECTURE
CIVIL ENGINEERING
SPORT PLANNING & DESIGN
2455 The Alameda
Santa Clara, CA 95050
tel: 408.985.7200
fax: 408.985.7260
www.VerdeDesigninc.com

STAMP

REGISTERED PROFESSIONAL ENGINEER
DERTIN CORBETT
No. C-56494
Signature
EXPIRATION DATE
June 30, 2019
STATE OF CALIFORNIA

CONSULTANT

SHEET TITLE
MATERIAL PLAN - SOCCER/LACROSSE AND TENNIS COURTS

PROJECT NAME
COLLEGE OF MARIN ATHLETIC FACILITIES IMPROVEMENTS

PROJECT ADDRESS
835 COLLEGE AVE.
KENTFIELD, CA
94904

SUBMITTAL	DATE
80% CD SUBMITTAL	06/16/17
100% SUBMITTAL	06/30/17

NO.	REVISIONS	DATE

DRAWN BY	CHECKED BY
KL	DC
DATE ISSUED 06/30/17	SCALE 1"= 20'-0"

PROJ. NO. 1702200

SHEET NO. L7.1

ALL IDEAS, DESIGN, ARRANGEMENTS, AND PLANS INDICATED OR REPRESENTED BY THIS DRAWING ARE OWNED BY AND THE PROPERTY OF VERDE DESIGN, INC. AND WERE CREATED, EVOLVED, AND DEVELOPED FOR USE ON AND IN CONNECTION WITH THE SPECIFIED PROJECT. NONE OF SUCH IDEAS, DESIGNS, ARRANGEMENTS OR PLANS SHALL BE USED, REPRODUCED, OR PUBLISHED BY ANY METHOD, IN WHOLE OR IN PART, OR DISCLOSED TO ANY PERSON, FIRM, OR

DRINKING FOUNTAIN REPLACEMENT
CONTRACTOR SHALL REPLACE EXISTING DRINKING FOUNTAIN LOCATED AT PE 20 WITH NEW WALL MOUNTED DRINKING FOUNTAIN. REFER TO SPECIFICATION FOR MANUFACTURER AND MODEL.

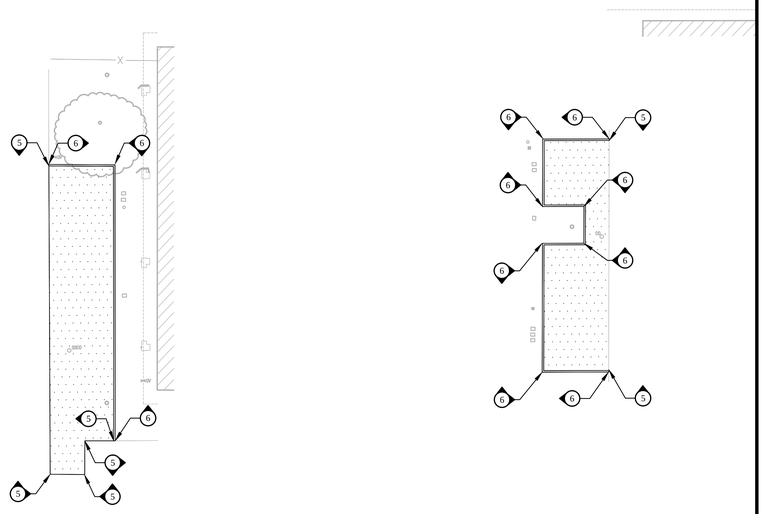

P.E. COURTYARDS

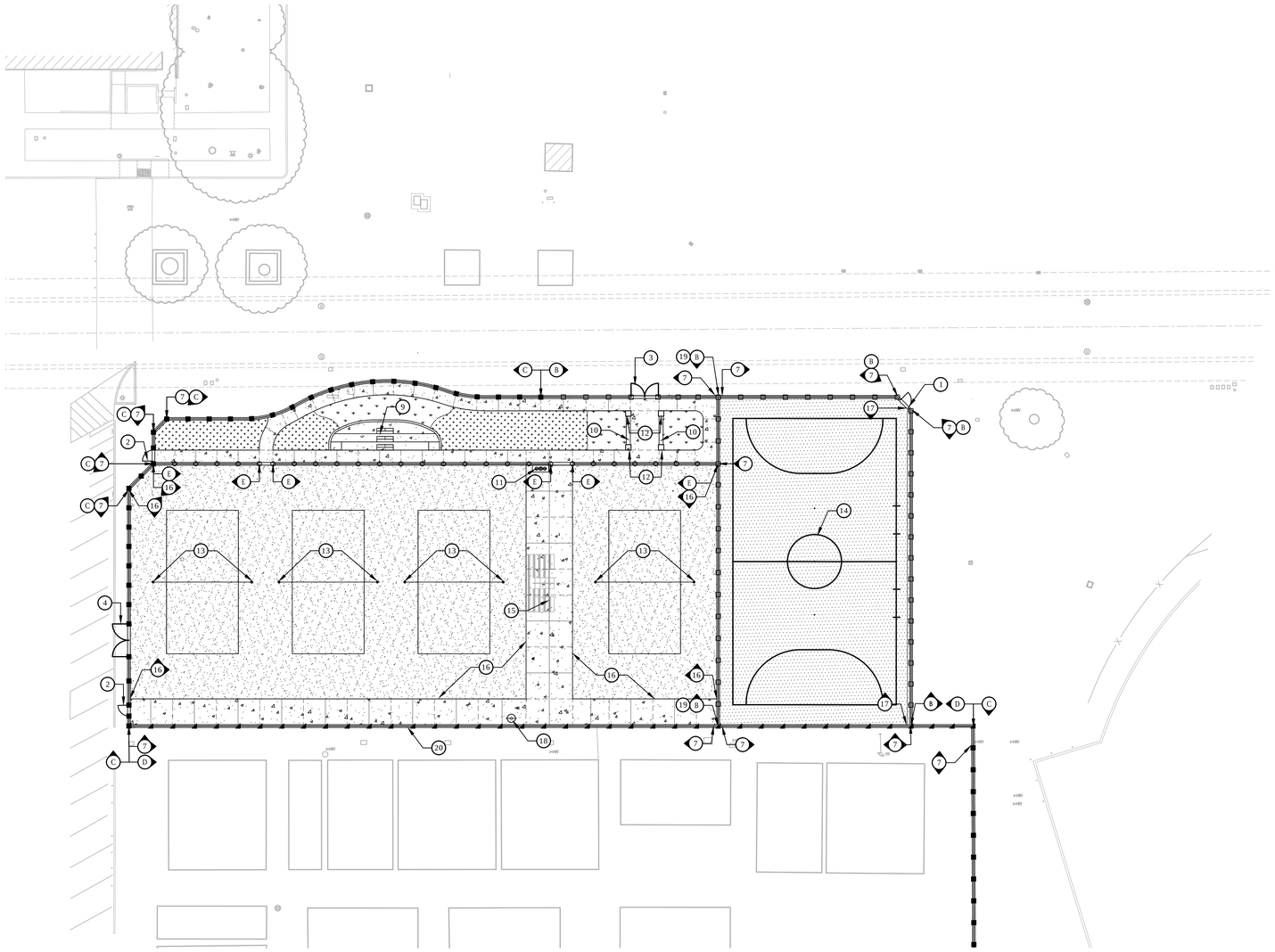

MATERIAL NOTES

1. THE CONTRACTOR SHALL COORDINATE ALL CONSTRUCTION ELEMENTS INCLUDING UTILITY LOCATIONS AND REQUIRED SLEEVING PRIOR TO INSTALLATION. VERIFY CRITICAL DIMENSIONS, REFERENCE POINT LOCATIONS AND CONSTRUCTION CONDITIONS PRIOR TO INITIATING CONSTRUCTION. TEMPORARY BENCHMARKS OR REFERENCE POINTS SHALL BE SET BY THE CONTRACTOR AS NECESSARY. NOTIFY THE OWNER'S REPRESENTATIVE IMMEDIATELY SHOULD DISCREPANCY ARISE AND REDIRECT WORK TO AVOID DELAYS.
2. THE INTERFACE OF ALL PROPOSED IMPROVEMENTS TO EXISTING SITE SHALL CONFORM AND BE SMOOTH AND UNIFORM.
3. ALL REINFORCING AND FORMS SHALL BE SECURED IN PLACE AND ACCEPTED BY OWNER'S REPRESENTATIVE PRIOR TO PLACING ANY CONCRETE.
4. CONCRETE FINISHES SHALL BE AS NOTED. CONTRACTOR SHALL PROVIDE 4'X4' SAMPLES OF ALL SPECIFIED FINISHES OF CONCRETE USING THE SAME MATERIALS THAT WILL BE USED IN THE ACTUAL CONSTRUCTION FOR EACH TYPE SPECIFIED. SAMPLES SHALL BE PREPARED WELL ENOUGH IN ADVANCE OF SCHEDULED CONCRETE POUR TO ALLOW FOR REVIEW AND POSSIBLE RE-POURING OF UNACCEPTABLE SAMPLES. UNACCEPTABLE SAMPLES SHALL BE RE-PREPARED UNTIL ACCEPTED BY THE OWNER'S REPRESENTATIVE. ACCEPTED SAMPLES SHALL BE PROTECTED AND REMAIN ON SITE FOR REFERENCE UNTIL FINAL ACCEPTANCE.
5. ALL FENCES AND GATES SHOWN ON PLAN ARE GRAPHIC REPRESENTATIONS; REFER TO DETAILS AND SPECIFICATIONS FOR PRECISE LOCATION.
6. ASPHALT SHALL NOT BE INSTALLED UNTIL ALL EDGES AND SITE FURNISHING PADS ARE INSTALLED.

NORTH

0' 10' 20' 40' 60'

MATERIAL LEGEND

SYM	DESCRIPTION	DTL REF
	SYNTHETIC TURF (OWNER INSTALLED)	P D2.0
	SYNTHETIC TURF AT FUTSAL FIELD (OWNER INSTALLED)	Q D2.0
	CONCRETE PAVING	H D2.0
	BEACH VOLLEYBALL SAND, REFER TO SPECIFICATIONS	
	PLANTING AREA, REFER TO PLANTING PLAN	
	NATURAL GRASS, REFER TO SPECIFICATIONS	
	SCORE JOINT EXPANSION JOINT	I D2.0
	HEADER BOARD	M D2.1
B	8' TALL CHAIN LINK FENCE IN 12" WIDE EDGEBAND	E D3.0
C	8' TALL ORNAMENTAL FENCINIG IN 12" WIDE EDGEBAND	A D3.1
D	8' TALL CHAIN LINK FENCE WITH WINDSCREEN	F D3.0
E	42" TALL CHAIN LINK FENCE IN 12" WIDE EDGEBAND	D D3.0

SYM	DESCRIPTION	DTL REF
1	8' TALL, 4' WIDE SWING CHAIN LINK GATE	P D3.0
2	8' TALL, 4' WIDE SWING ORNAMENTAL GATE	B D3.1
3	8' TALL, 10' WIDE DOUBLE SWING CHAIN LINK GATE	N D3.0
4	8' TALL, 12' WIDE DOUBLE SWING ORNAMENTAL GATE	C D3.1
5	SYNTHETIC TURF CONNECTION AT EXISTING PAVEMENT	S D2.0
6	6" WIDE EDGEBAND AT SYNTHETIC TURF	E D2.0
7	12" WIDE EDGEBAND IN FENCE	C D2.0
8	NOT USED	
9	CONCRETE SEATING	N D2.1
10	CONCRETE SEAT WALL	A,B D2.1
11	DRINKING FOUNTAIN	F D1.1
12	SEATWALL PLINTHS	A,I D2.1
13	BEACH VOLLEYBALL NET FOOTING, REFER TO SPECIFICATIONS FOR NETTING INFORMATION	L D4.0

SYM	DESCRIPTION	DTL REF
14	FUTSAL FIELD STRIPING	I D4.0
15	5-ROW BLEACHERS LOCATION (OWNER FURNISHED)	
16	BEACH VOLLEYBALL SAND SECTION/EGDE	K D4.0
17	FUTSAL EDGE/ FIELD TRENCH DRAIN	R D1.0
18	OUTDOOR SHOWER (INSTALL PER MANUFACTURER'S RECOMMENDATIONS)	
19	CURB TYPE 1	B D2.0
20	BEACH VOLLEYBALL WINDSCREEN	J D3.1

VERDE DESIGN
LANDSCAPE ARCHITECTURE
CIVIL ENGINEERING
SPORT PLANNING & DESIGN
2455 The Alameda
Santa Clara, CA 95050
tel: 408.985.7200
fax: 408.985.7260
www.VerdeDesigninc.com

STAMP

REGISTERED PROFESSIONAL ENGINEER
DERTIN CORBETT
No. C-56404
Signature
EXPIRATION DATE
June 30, 2019
STATE OF CALIFORNIA

CONSULTANT

SHEET TITLE
MATERIAL PLAN - VOLLEYBALL/FUTSAL/ P.E. COURTYARDS

PROJECT NAME
COLLEGE OF MARIN ATHLETIC FACILITIES IMPROVEMENTS

PROJECT ADDRESS
835 COLLEGE AVE.
KENTFIELD, CA
94904

SUBMITTAL	DATE
80% CD SUBMITTAL	06/16/17
100% SUBMITTAL	06/30/17

NO.	REVISIONS	DATE

DRAWN BY: KL	CHECKED BY: DC
DATE ISSUED: 06/30/17	SCALE: 1"= 20'-0"
PROJ. NO.: 1702200	
SHEET NO.: L7.2	

ALL IDEAS, DESIGNS, ARRANGEMENTS, AND PLANS INDICATED OR REPRESENTED BY THIS DRAWING ARE OWNED BY AND THE PROPERTY OF VERDE DESIGN, INC. AND WERE CREATED, EVOLVED, AND DEVELOPED FOR USE ON AND IN CONNECTION WITH THE SPECIFIED PROJECT. NONE OF SUCH IDEAS, DESIGNS, ARRANGEMENTS OR PLANS SHALL BE USED, REPRODUCED, OR PUBLISHED BY ANY METHOD, IN WHOLE OR IN PART, OR DISCLOSED TO ANY PERSON, FIRM, OR CORPORATION WITHOUT WRITTEN PERMISSION OF VERDE DESIGN, INC.

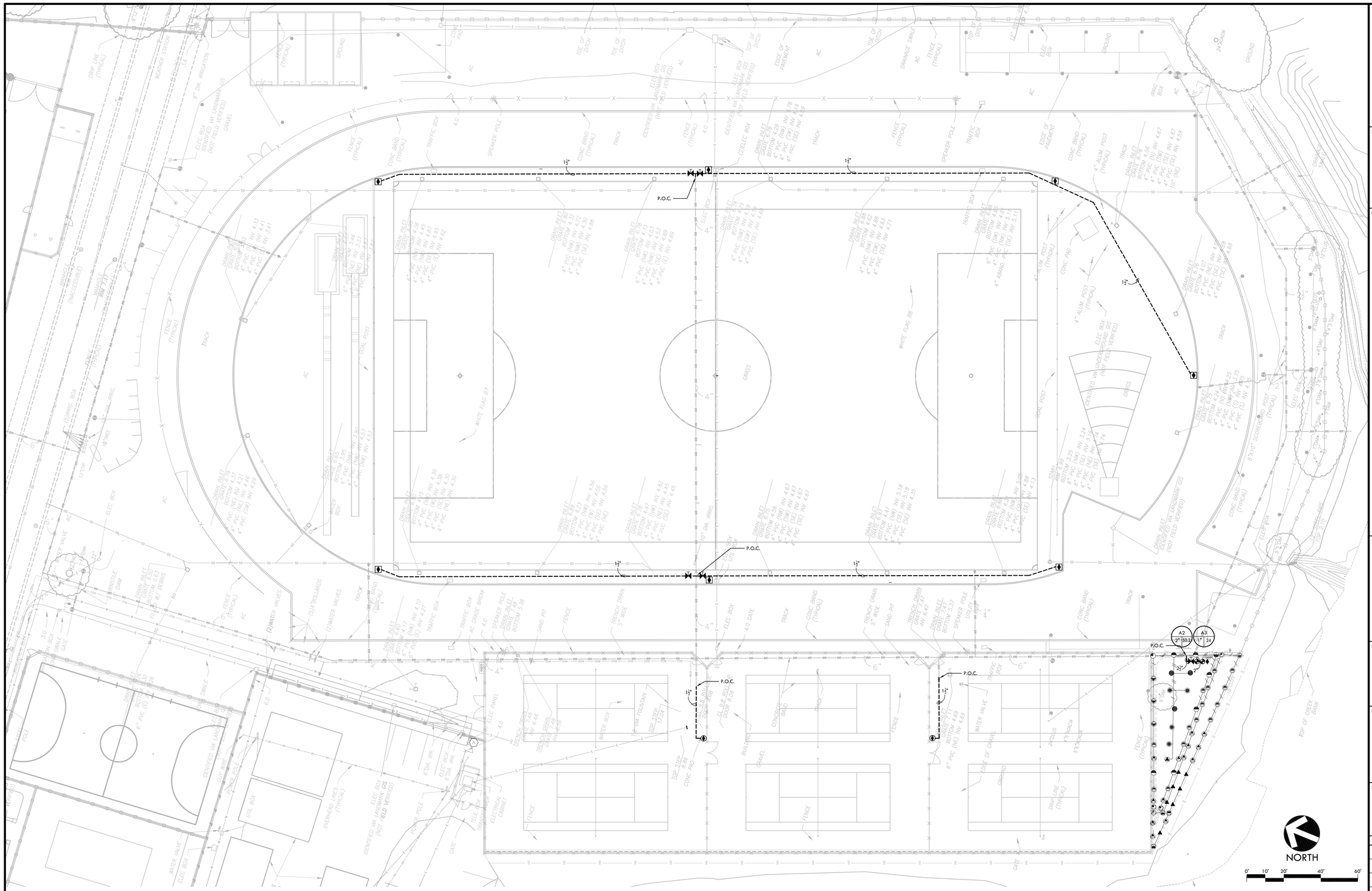

IRRIGATION NOTES

1. THIS SYSTEM IS DESIGNED TO OPERATE AT A MAXIMUM FLOW OF (180) GPM WITH A MINIMUM (65) STATIC P.S.I. AT THE POINT OF CONNECTION. CONTRACTOR SHALL VERIFY PRESSURE PRIOR TO BEGINNING WORK. CONTACT OWNER IMMEDIATELY SHOULD DISCREPANCY ARISE AND RE-DIRECT WORK TO AVOID DELAY.
2. IRRIGATION SYSTEM DESIGN IS DIAGRAMMATIC. WHERE PIPING, VALVES, QUICK COUPLERS, ETC. ARE SHOWN OUTSIDE PLANTING AREAS, OR LIMIT OF WORK; INTENT IS FOR PIPING, VALVES, ETC., TO BE INSTALLED WITHIN PLANTING AREAS OF PROPERTY. INDICATE EXACT LOCATIONS OF IRRIGATION EQUIPMENT ON RECORD DRAWINGS. REFER TO SPECIFICATIONS.
3. CONTRACTOR SHALL PROGRAM CONTROLLER TO INSURE PROPER IRRIGATION COVERAGE AND RUNTIMES BASED ON PLANT TYPE, EXPOSURE, SLOPE, SOIL TYPE, AND SEASON.
3. CONTRACTOR SHALL USE EXTREME CARE WHERE IT IS NECESSARY TO TRENCH NEAR EXISTING TREES. EXCAVATION IN AREAS EXHIBITING ROOT 3" AND LARGER SHALL BE DONE BY HAND. ROOTS 2" OR LARGER IN DIAMETER DAMAGED IN CONSTRUCTION SHALL BE CLEANLY CUT, AND KEPT COVERED AND MOIST WITH WET BURLAP UNTIL TRENCHES ARE BACKFILLED.
4. CONTRACTOR SHALL MAKE MINOR ADJUSTMENTS TO HEAD LOCATIONS IN FIELD AS NECESSARY.
5. CONTRACTOR SHALL REFER TO DETAILS AND SPECIFICATIONS FOR ADDITIONAL INFORMATION.

IRRIGATION LEGEND

SYM.	MANUF.	MODEL NO./ DESCRIPTION	DES RAD./CAT RAD.	GPM	PSI	DTL REF
	RAIN BIRD	1812-SAM-PRS BODY WITH 5Q, 5H, 5F, VAN NOZZLES	4.5'-5'	.10-.41	30	I D6.0
	RAIN BIRD	1812-SAM-PRS BODY WITH 8Q, 8H, 8F, VAN NOZZLES	7'-8'	.26-1.05	30	I D6.0
	RAIN BIRD	1812-SAM-PRS BODY WITH 10Q, 10H, 10F, VAN NOZZLES	9'-10'	.39-1.58	30	I D6.0
	RAIN BIRD	1812-SAM-PRS BODY WITH 12Q, 12H, 12F, VAN NOZZLES	10.8'-12'	.65-2.60	30	I D6.0
	RAIN BIRD	1806-SAM-PRS BODY WITH 15Q, 15H, 15F NOZZLES	13.5'-15'	.92-3.70	30	I D6.0
	RAIN BIRD	1812-SAM-PRS BODY WITH 15CST NOZZLES	4 X 30	1.21	30	I D6.0
	GRISWOLD	2030 REMOTE CONTROL VALVE - SIZE AS NOTED				A D6.0
	NIBCO	GATE VALVES 2" AND SMALLER SHALL BE NIBCO T-113-LF. FOR VALVES ABOVE 2" IN SIZE UTILIZE NIBCO F-619-LF FLANGED VALVE WITH SQUARE OPERATING NUT.				B,C,D D6.0

	RAIN BIRD	44-LRC QUICK COUPLER VALVE IN SOFTSCAPE	F D6.0
	RAIN BIRD	44-LRC QUICK COUPLER VALVE IN SYNTHETIC TURF	H D6.0
	RAIN BIRD	44-LRC QUICK COUPLER VALVE IN HARDSCAPE	G D6.0
		MAINLINE - 2" AND SMALLER; SCHEDULE 40 PVC WITH SOLVENT-WELD FITTINGS; 2-1/2" AND 3"; CLASS 315 PVC WITH RING - TITE CONNECTIONS. 4" AND LARGER; CLASS 200 WITH 24" COVER.	E D6.0
		3/4" LATERAL LINE - SCH 40. PVC PIPE & SOLVENT WELD FITTINGS, WITH 18" COVER.	E D6.0
		1" LATERAL LINE - SCH 40. PVC PIPE & SOLVENT WELD FITTINGS, WITH 18" COVER.	E D6.0
		1-1/4" LATERAL LINE - SCH 40. PVC PIPE & SOLVENT WELD FITTINGS, WITH 18" COVER.	E D6.0
		1-1/2" LATERAL LINE - SCH 40. PVC PIPE & SOLVENT WELD FITTINGS, WITH 18" COVER.	E D6.0
		2" LATERAL LINE - SCH 40. PVC PIPE & SOLVENT WELD FITTINGS, WITH 18" COVER.	E D6.0
A1 1" 13		CONTROLLER STATION NUMBER APPROX. GPM FLOW THROUGH VALVE CONTROL VALVE SIZE	
P.O.C.		POINT OF CONNECTION - TIE PROPOSED MAIN LINES TO EXISTING SUPPLY LINE. CONTRACTOR SHALL VERIFY LOCATION, SIZE, AND TYPE OF EXISTING SUPPLY LINE AND WATER PRESSURE. PROVIDE STATIC WATER PRESSURE RATING TO OWNER'S REPRESENTATIVE.	
		EXISTING IRRIGATION CONTROLLER	
		(E) IRRIGATION MAINLINE TO REMAIN UNLESS OTHERWISE NOTED. CONTRACTOR TO VERIFY LOCATION IN FIELD.	

VERDE DESIGN
LANDSCAPE ARCHITECTURE
CIVIL ENGINEERING
SPORT PLANNING & DESIGN
2455 The Alameda
Santa Clara, CA 95050
tel: 408.985.7200
fax: 408.985.7260
www.VerdeDesigninc.com

STAMP

REGISTERED PROFESSIONAL ENGINEER
DUSTIN COMBS
No. C-56494
Signature
EXPIRATION DATE
June 30, 2018
STATE OF CALIFORNIA

CONSULTANT

SHEET TITLE

IRRIGATION PLAN - SOCCER /LACROSSE AND TENNIS COURTS

PROJECT NAME

COLLEGE OF MARIN ATHLETIC FACILITIES IMPROVEMENTS

PROJECT ADDRESS

835 COLLEGE AVE.
KENTFIELD, CA
94904

SUBMITTAL	DATE
80% CD SUBMITTAL	06/16/17
100% SUBMITTAL	06/30/17

NO.	REVISIONS	DATE

DRAWN BY	CHECKED BY
JS	DC
DATE ISSUED 06/30/17	SCALE 1"= 20'-0"
PROJ. NO. 1702200	
SHEET NO. L8.1	

ALL IDEAS, DESIGNS, ARRANGEMENTS, AND PLANS INDICATED OR REPRESENTED BY THIS DRAWING ARE OWNED BY AND THE PROPERTY OF VERDE DESIGN, INC. AND WERE CREATED, EVOLVED, AND DEVELOPED FOR USE ON AND IN CONNECTION WITH THE SPECIFIED PROJECT. NONE OF SUCH IDEAS, DESIGNS, ARRANGEMENTS OR PLANS SHALL BE USED, REPRODUCED, OR PUBLISHED BY ANY METHOD, IN WHOLE OR IN PART, OR DISCLOSED TO ANY PERSON, FIRM, OR CORPORATION FOR ANY PURPOSE WHATSOEVER WITHOUT THE WRITTEN PERMISSION OF VERDE DESIGN, INC.

ALL IDEAS, DESIGNS, ARRANGEMENTS, AND PLANS INDICATED OR REPRESENTED BY THIS DRAWING ARE OWNED BY AND THE PROPERTY OF VERDE DESIGN, INC. AND WERE CREATED, EVOLVED, AND DEVELOPED FOR USE ON AND IN CONNECTION WITH THE SPECIFIED PROJECT. NONE OF SUCH IDEAS, DESIGNS, ARRANGEMENTS OR PLANS SHALL BE USED, REPRODUCED, OR PUBLISHED BY ANY METHOD, IN WHOLE OR IN PART, OR DISCLOSED TO ANY PERSON, FIRM, OR CORPORATION WITHOUT WRITTEN AUTHORIZATION FROM VERDE DESIGN, INC.

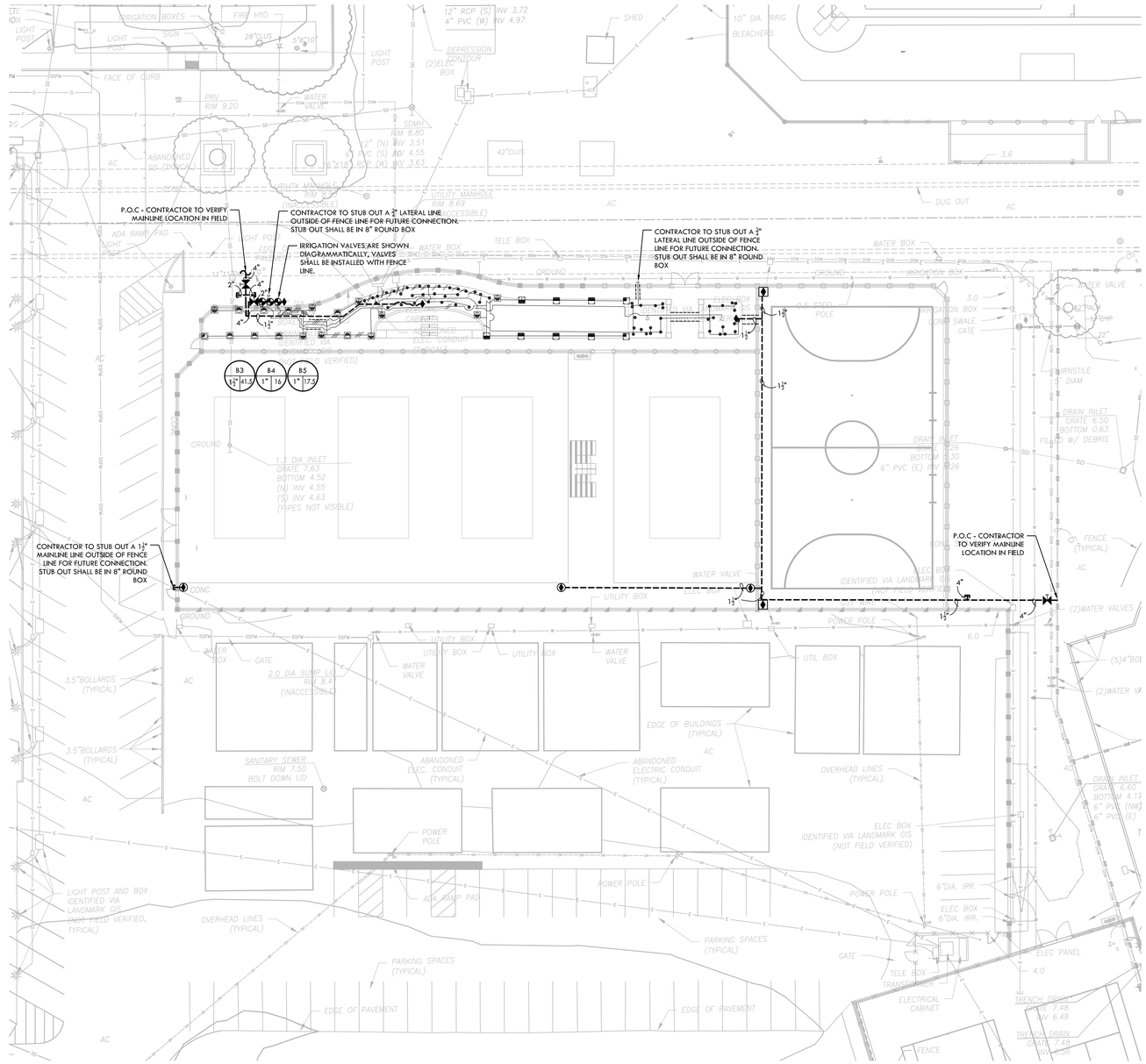

IRRIGATION NOTES

1. THIS SYSTEM IS DESIGNED TO OPERATE AT A MAXIMUM FLOW OF (180) GPM WITH A MINIMUM (65) STATIC P.S.I. AT THE POINT OF CONNECTION. CONTRACTOR SHALL VERIFY PRESSURE PRIOR TO BEGINNING WORK. CONTACT OWNER IMMEDIATELY SHOULD DISCREPANCY ARISE AND RE-DIRECT WORK TO AVOID DELAY.
2. IRRIGATION SYSTEM DESIGN IS DIAGRAMMATIC. WHERE PIPING, VALVES, QUICK COUPLERS, ETC. ARE SHOWN OUTSIDE PLANTING AREAS, OR LIMIT OF WORK, INTENT IS FOR PIPING, VALVES, ETC., TO BE INSTALLED WITHIN PLANTING AREAS OF PROPERTY. INDICATE EXACT LOCATIONS OF IRRIGATION EQUIPMENT ON RECORD DRAWINGS. REFER TO SPECIFICATIONS.
3. CONTRACTOR SHALL PROGRAM CONTROLLER TO INSURE PROPER IRRIGATION COVERAGE AND RUNTIMES BASED ON PLANT TYPE, EXPOSURE, SLOPE, SOIL TYPE, AND SEASON.
3. CONTRACTOR SHALL USE EXTREME CARE WHERE IT IS NECESSARY TO TRENCH NEAR EXISTING TREES. EXCAVATION IN AREAS EXHIBITING ROOT 3" AND LARGER SHALL BE DONE BY HAND. ROOTS 2" OR LARGER IN DIAMETER DAMAGED IN CONSTRUCTION SHALL BE CLEANLY CUT, AND KEPT COVERED AND MOIST WITH WET BURLAP UNTIL TRENCHES ARE BACKFILLED.
4. CONTRACTOR SHALL MAKE MINOR ADJUSTMENTS TO HEAD LOCATIONS IN FIELD AS NECESSARY.
5. CONTRACTOR SHALL REFER TO DETAILS AND SPECIFICATIONS FOR ADDITIONAL INFORMATION.

IRRIGATION LEGEND

SYM.	MANUF.	MODEL NO./ DESCRIPTION	DES RAD./ /CAT RAD.	GPM	PSI	DTL REF
•	RAINBIRD	1401-BUBBLER HEAD	-	.25	30	O D6.0
○	RAINBIRD	1405-BUBBLER HEAD 4 PER TREE	-	.50	30	N D6.0
	RAIN BIRD	1806-SAM-PRS BODY WITH 8Q, 8H, 8F, VAN NOZZLES	7'-8'	.26-1.05	30	I D6.0
	RAIN BIRD	1806-SAM-PRS BODY WITH 10Q, 10H, 10F, VAN NOZZLES	9'-10'	.39-1.58	30	I D6.0
	RAIN BIRD	1806-SAM-PRS BODY WITH 12Q, 12H, 12F, VAN NOZZLES	10.8'-12'	.65-2.60	30	I D6.0
	RAIN BIRD	1806-SAM-PRS BODY WITH 15Q, 15H, 15F, VAN NOZZLES	13.5'-15'	.92-3.70	30	I D6.0
	GRISWOLD	P-2230 REMOTE CONTROL VALVE - SIZE AS NOTED				A D6.0

SYM.	MANUF.	MODEL NO./ DESCRIPTION	DTL REF
	NIBCO	GATE VALVES 2" AND SMALLER SHALL BE NIBCO T-113-4F. FOR VALVES ABOVE 2" IN SIZE UTILIZE NIBCO F-619-LF FLANGED VALVE WITH SQUARE OPERATING NUT.	B,C,D D6.0
	RAINBIRD	44-LRC QUICK COUPLER VALVE IN SOFTSCAPE	F D6.0
	RAINBIRD	44-LRC QUICK COUPLER VALVE IN SYNTHETIC TURF	H D6.0
	RAINBIRD	44-LRC QUICK COUPLER VALVE IN HARDSCAPE	G D6.0
		MAINLINE - 2" AND SMALLER: SCHEDULE 40 PVC WITH SOLVENT-WELD FITTINGS; 2-1/2" AND 3": CLASS 315 PVC WITH RING - TITE CONNECTIONS. 4" AND LARGER: CLASS 200 WITH 24" COVER.	E D6.0
		3/4" LATERAL LINE - SCH 40. PVC PIPE & SOLVENT WELD FITTINGS, WITH 18" COVER.	E D6.0
		1" LATERAL LINE - SCH 40. PVC PIPE & SOLVENT WELD FITTINGS, WITH 18" COVER.	E D6.0
		1-1/4" LATERAL LINE - SCH 40. PVC PIPE & SOLVENT WELD FITTINGS, WITH 18" COVER.	E D6.0
		1-1/2" LATERAL LINE - SCH 40. PVC PIPE & SOLVENT WELD FITTINGS, WITH 18" COVER.	E D6.0
		2" LATERAL LINE - SCH 40. PVC PIPE & SOLVENT WELD FITTINGS, WITH 18" COVER.	E D6.0
		IRRIGATION SLEEVE - CLASS 315 PVC. SIZE TO BE TWICE THE SIZE OF TOTAL PIPE DIAMETERS WITHIN THE SLEEVE, WITH 30" COVER.	E D6.0
81 / 1" 11-3		CONTROLLER STATION NUMBER / APPROX. GPM FLOW THROUGH VALVE / CONTROL VALVE SIZE	
P.O.C.		POINT OF CONNECTION - TIE PROPOSED MAIN LINES TO EXISTING SUPPLY LINE. CONTRACTOR SHALL VERIFY LOCATION, SIZE, AND TYPE OF EXISTING SUPPLY LINE AND WATER PRESSURE. PROVIDE STATIC WATER PRESSURE RATING TO OWNER'S REPRESENTATIVE.	

	STUB AND CAP MAIN LINE IN 8" ROUND VALVE BOX. RUN 3 ADDITIONAL CONTROL WIRES AND ONE COMMON FROM CONTROLLER AND COIL 24" OF WIRE IN VALVE BOX.
	(E) IRRIGATION MAINLINE TO REMAIN UNLESS OTHERWISE NOTED. CONTRACTOR TO VERIFY LOCATION IN FIELD.
R	EXISTING IRRIGATION CONTROLLER

NORTH

0' 10' 20' 40' 60'

VERDE DESIGN
LANDSCAPE ARCHITECTURE
CIVIL ENGINEERING
SPORT PLANNING & DESIGN
2455 The Alameda
Santa Clara, CA 95050
tel: 408.985.7200
fax: 408.985.7260
www.VerdeDesigninc.com

STAMP

REGISTERED PROFESSIONAL ENGINEER
DUSTIN CONROY
No. C-56494
Signature
EXPIRATION DATE
June 30, 2019
STATE OF CALIFORNIA

CONSULTANT

SHEET TITLE
IRRIGATION PLAN - VOLLEYBALL/FUTSAL

PROJECT NAME
COLLEGE OF MARIN ATHLETIC FACILITIES IMPROVEMENTS

PROJECT ADDRESS
835 COLLEGE AVE.
KENTFIELD, CA
94904

SUBMITTAL	DATE
80% CD SUBMITTAL	06/16/17
100% SUBMITTAL	06/30/17

NO.	REVISIONS	DATE

DRAWN BY	CHECKED BY
WD	DC
DATE ISSUED	SCALE
06/30/17	1"= 20'-0"

PROJ. NO.
1702200

SHEET NO.
L8.2

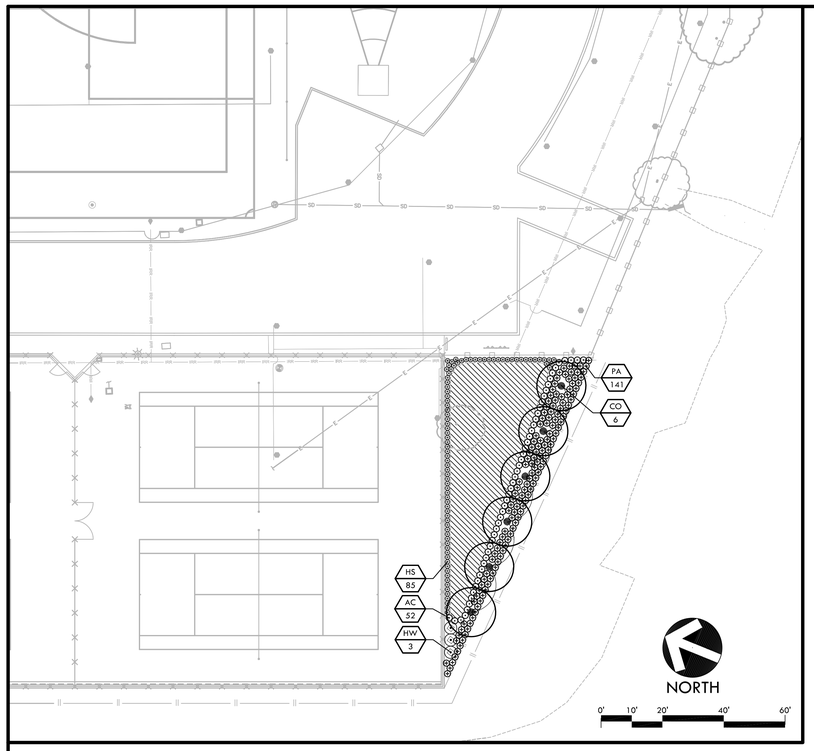

BIO-FILTRATION AREA

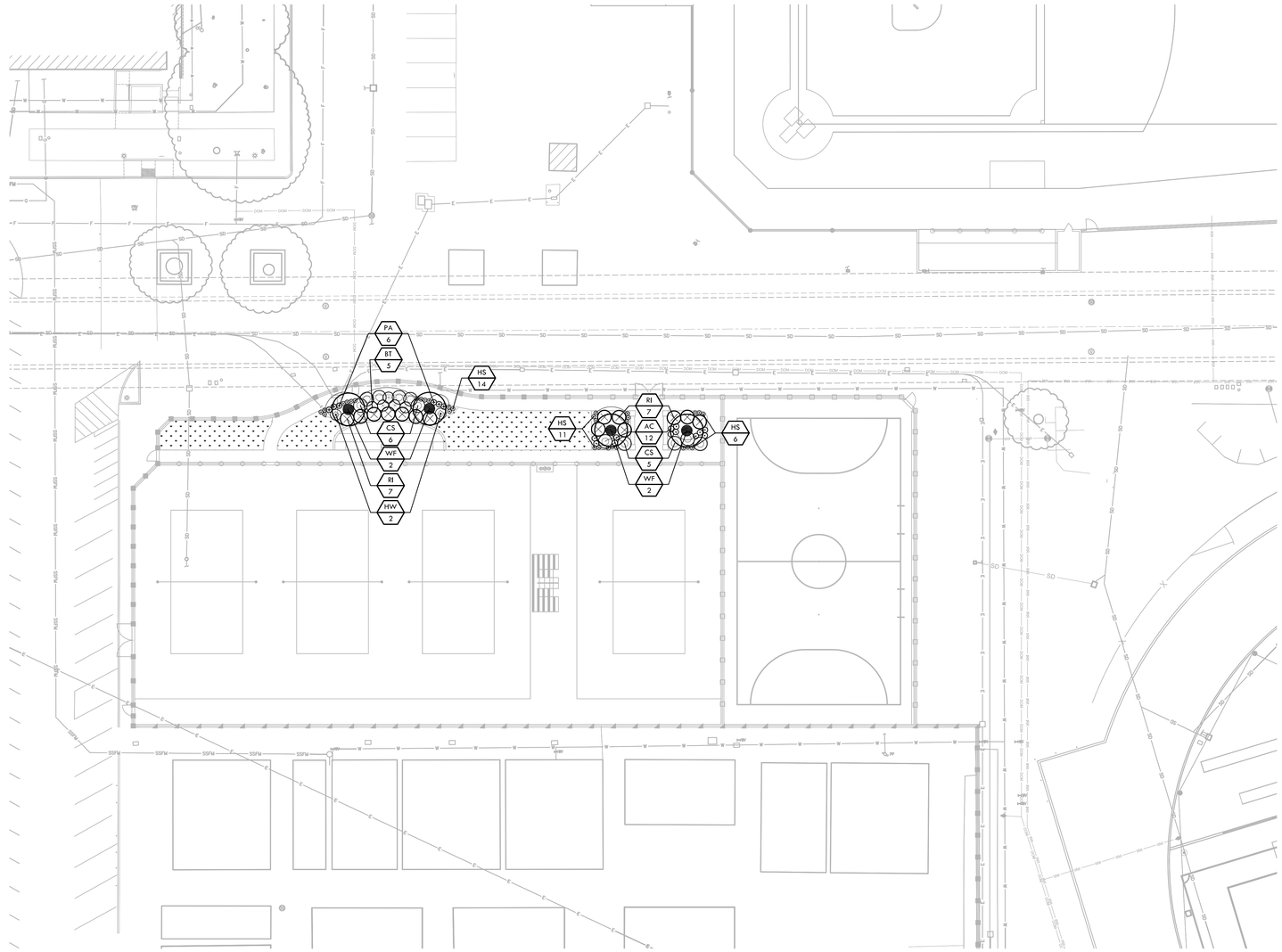

PLANTING LEGEND

SYM	QTY	SIZE	BOTANICAL/COMMON NAME	SPACING/ COMMENTS	DTL REF
TREES					
CO	6	24" BOX	CERCIS OCCIDENTALIS WESTERN REDBUD	16'-0" O.C.	N/D6.0
WF	4	36" BOX	WASHINGTONIA FILIFERA CALIFORNIA FAN PALM	AS SHOWN	N/D6.0
SHRUBS					
AC	64	5 GAL	ANIGOZANTHOS 'CAPE AURORA' CAPE AURORA KANGAROO PAW	2'-0" O.C.	O/D6.0
BT	5	5 GAL	BERBERIS THUNBERGII 'CHERRY BOMB' CHERRY BOMB JAPANESE BARBERRY	4'-0" O.C.	O/D6.0
CS	11	5 GAL	COLEONEMA 'SUNSET GOLD' SUNSET GOLD BREATH OF HEAVEN	4'-0" O.C.	O/D6.0
HW	5	5 GAL	HESPEROYUCCA WHIPPLEI 'RGB' WHIPPLE'S YUCCA	4'-0" O.C.	O/D6.0
PA	147	1 GAL	PENNISETUM ALOPECUROIDES 'LITTLE BUNNY' LITTLE BUNNY DWARF FOUNTAIN GRASS	2'-0" O.C.	O/D6.0
RI	14	5 GAL	RHAPIOLEPSIS INDICA 'SPRINGTIME' SPRINGTIME INDIAN HAWTHORN	5'-0" O.C.	O/D6.0
GROUND COVERS					
HS	116	1 GAL	HEMEROCALLIS X 'STELLA DE ORO' STELLA DE ORO DWARF DAYLILY	18" O.C.	O/D6.0
BIO-SWALE					
CF	1,056	1 GAL	CAREX PANSA SAND DUNE SEDGE	1'-0" O.C.	O/D6.0
TURF					
	1,437 SF		SODDED TURF - BLUE-RYE, REFER TO SPECIFICATIONS.		

PLANTING NOTES

1. CONTRACTOR SHALL PROTECT AND MAINTAIN ALL PLANT MATERIAL FROM TIME OF DELIVERY TO TIME OF FINAL ACCEPTANCE. OWNER SHALL NOT BE RESPONSIBLE FOR LOSSES DUE TO VANDALISM, THEFT OR SEVERE WEATHER.
2. CONTRACTOR SHALL PLACE PLANT MATERIALS SO THEY DO NOT INTERFERE WITH IRRIGATION SYSTEM OR INHIBIT REQUIRED COVERAGE. PLANT LOCATIONS MAY BE ADJUSTED AS LONG AS DESIGN INTENT IS NOT COMPROMISED. CONTRACTOR SHALL SET OUT PLANT MATERIAL AS PER PLAN AND RECEIVE ACCEPTANCE FROM OWNER'S REPRESENTATIVE WITH RESPECT TO PLANT HEALTH AND LOCATION PRIOR TO INSTALLATION. CONTRACTOR SHALL GIVE MINIMUM 2 WORKING DAYS NOTICE FOR OBSERVATION AND SHALL HAVE ALL PLANT MATERIAL IN SPECIFIED LOCATIONS FOR REVIEW AT ONE TIME. CONTRACTOR SHALL REPLACE ANY MATERIAL AS REQUESTED BY OWNER'S REPRERESENTATIVE.
3. ALL NON-TURF PLANTING AREAS SHALL RECEIVE A 3" LAYER OF BARK MULCH TOP DRESS (UNLESS NOTED OTHERWISE). REFER TO SPECIFICATIONS.
4. WHEN WORK HAS TO OCCUR UNDER THE DRIPLINE OF EXISTING TREES NOT SCHEDULED FOR REMOVAL, THE CONTRACTOR SHALL USE ALL POSSIBLE CARE TO AVOID INJURY TO THE TREES AND TREE ROOTS. GRADE IN LINES RADIAL TO THE EXISTING TREES RATHER THAN TANGENTIAL. ALL PARTIAL CUTS OR TEARS THROUGH ROOTS TWO INCHES IN DIAMETER AND LARGER SHALL BE CUT CLEAN. TRENCHES ADJACENT TO TREES SHALL BE FILLED WITHIN 24 HOURS AFTER EXCAVATION, BUT WHERE THIS IS NOT POSSIBLE, THE SIDE OF THE TRENCH ADJACENT TO THE TREE, AND ANY EXPOSED ROOTS SHALL BE KEPT SHADED AND MOIST WITH DAMPENED BURLAP OR CANVAS.
5. ALL TURF, MULCH AND PLANTERS TO RECEIVE SOIL AMENDMENTS AND SOIL PREPARATION PER SPECIFICATIONS UNLESS OTHERWISE NOTED.
6. CONTRACTOR SHALL PROVIDE JUTE NETTING IN THE ENTIRE PLANTING AREAS THAT ARE ON SLOPE 3:1 OR GREATER. STAKE JUTE NETTING 36" ON CENTER.

NORTH

0' 10' 20' 40' 60'

VERDE DESIGN
LANDSCAPE ARCHITECTURE
CIVIL ENGINEERING
SPORT PLANNING & DESIGN
2455 The Alameda
Santa Clara, CA 95050
tel: 408.985.7200
fax: 408.985.7260
www.VerdeDesigninc.com

STAMP

REGISTERED PROFESSIONAL ENGINEER
DEVIN CONROY
No. C-56494
Signature
EXPIRATION DATE
June 30, 2018
STATE OF CALIFORNIA

CONSULTANT

SHEET TITLE

PLANTING PLAN - VOLLEYBALL/FUTSAL/ BIO-FILTRATION AREA

PROJECT NAME

COLLEGE OF MARIN ATHLETIC FACILITIES IMPROVEMENTS

PROJECT ADDRESS

835 COLLEGE AVE.
KENTFIELD, CA
94904

SUBMITTAL	DATE
80% CD SUBMITTAL	06/16/17
100% SUBMITTAL	06/30/17

NO.	REVISIONS	DATE

DRAWN BY	CHECKED BY
KL	DC
DATE ISSUED 06/30/17	SCALE 1"= 20'-0"

PROJ. NO. 1702200

SHEET NO. L9.0

ALL IDEAS, DESIGNS, ARRANGEMENTS, AND PLANS INDICATED OR REPRESENTED BY THIS DRAWING ARE OWNED BY AND THE PROPERTY OF VERDE DESIGN, INC. AND WERE CREATED, EVOLVED, AND DEVELOPED FOR USE ON AND IN CONNECTION WITH THE SPECIFIED PROJECT. NONE OF SUCH IDEAS, DESIGNS, ARRANGEMENTS OR PLANS SHALL BE USED, REPRODUCED, OR PUBLISHED BY ANY METHOD, IN WHOLE OR IN PART, OR DISCLOSED TO ANY PERSON, FIRM, OR CORPORATION, FOR ANY PURPOSE WHATSOEVER WITHOUT THE WRITTEN PERMISSION OF VERDE DESIGN, INC.

ALL IDEAS, DESIGNS, ARRANGEMENTS, AND PLANS INDICATED OR REPRESENTED BY THIS DRAWING ARE OWNED BY AND THE PROPERTY OF VERDE DESIGN, INC. AND WERE CREATED, EVOLVED, AND DEVELOPED FOR USE ON AND IN CONNECTION WITH THE SPECIFIED PROJECT. NONE OF SUCH IDEAS, DESIGNS, ARRANGEMENTS OR PLANS SHALL BE USED, REPRODUCED, OR PUBLISHED BY ANY METHOD, IN WHOLE OR IN PART, OR DISCLOSED TO ANY PERSON, FIRM, OR CORPORATION FOR ANY PURPOSE WHATSOEVER WITHOUT WRITTEN PERMISSION OF VERDE DESIGN, INC.

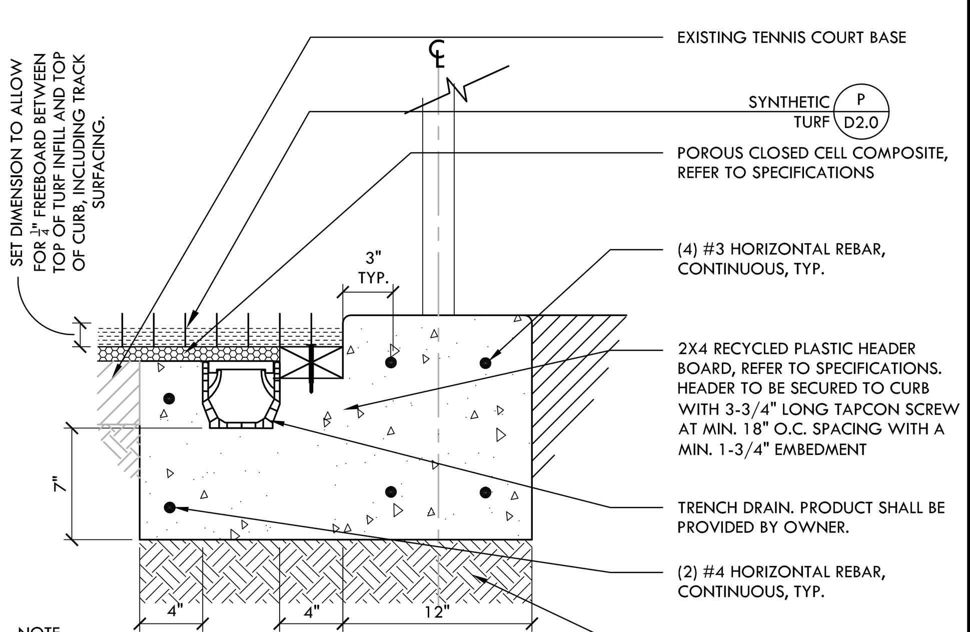

NOTE:
REFER TO EDGEBAND AND CURB NOTES, DETAIL A, SHEET D2.0 FOR ADDITIONAL INFORMATION

R FUTSAL EDGE/FIELD TRENCH DRAIN NTS

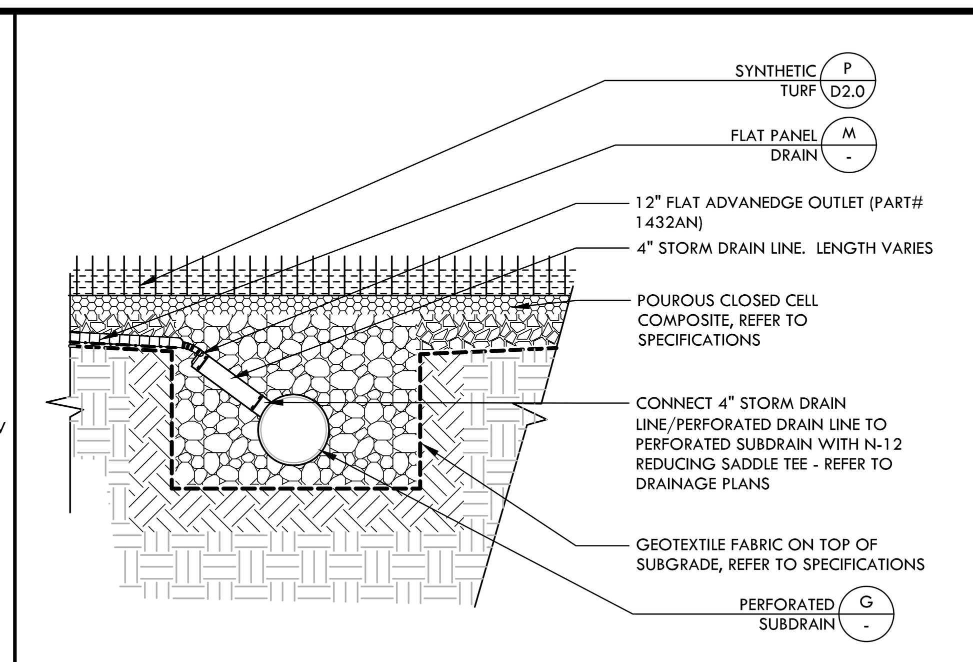

N FLAT PANEL DRAIN CONNECTION NTS

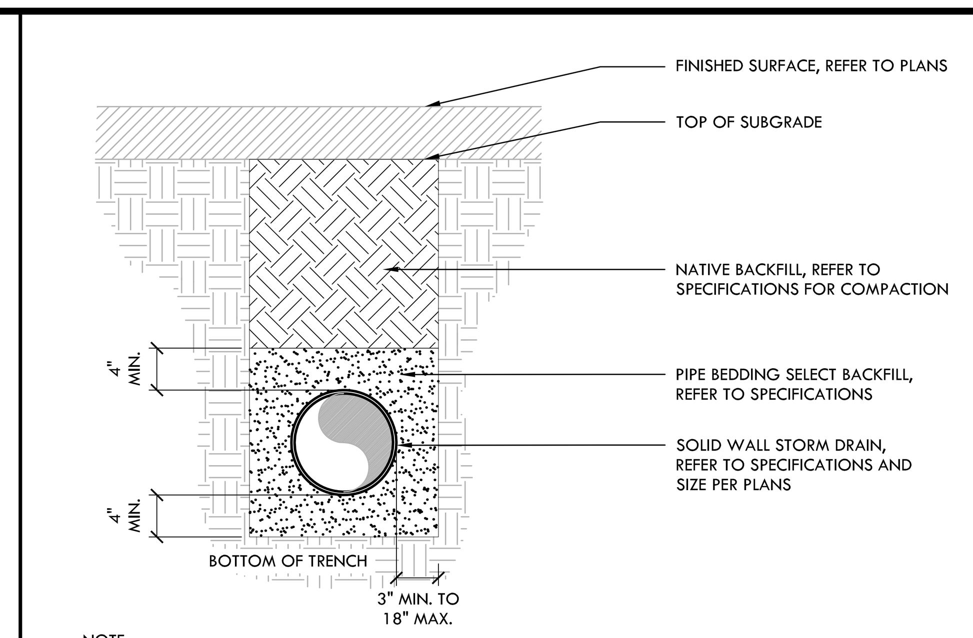

NOTE:
CONTRACTOR TO INSTALL SURFACING IMPROVEMENTS PER DRAWINGS. SECTIONS FOR SURFACING IMPROVEMENTS SHALL SUPERCEDE BACKFILL FOR STORM DRAINS.

J TRENCH BACKFILL - SOLID WALL STORM/SEWER NTS

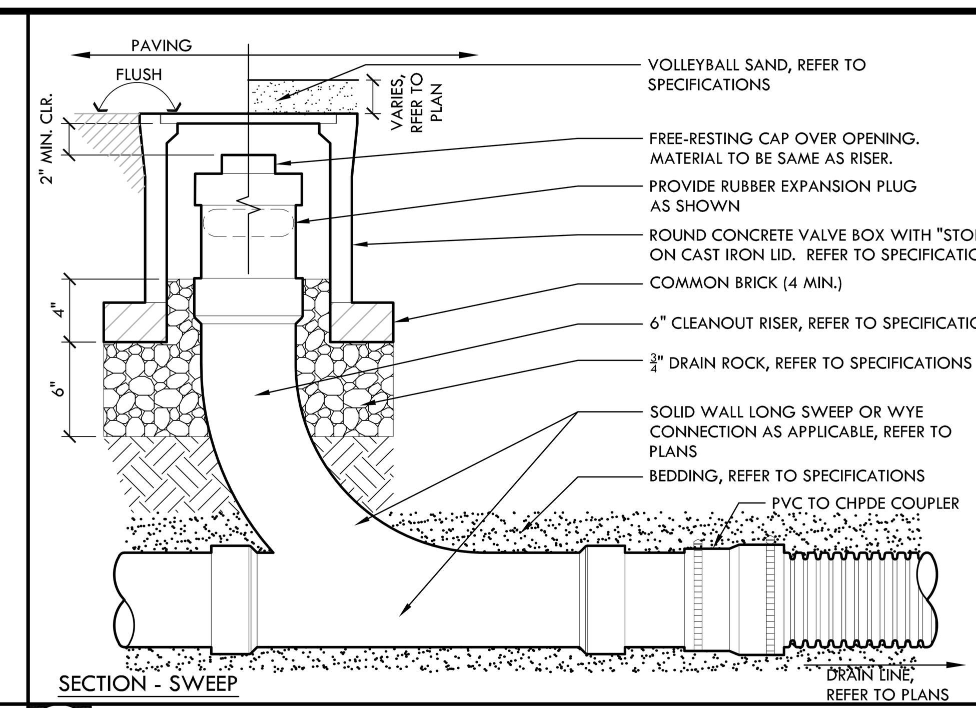

E CLEANOUT IN HARDSCAPE/SAND

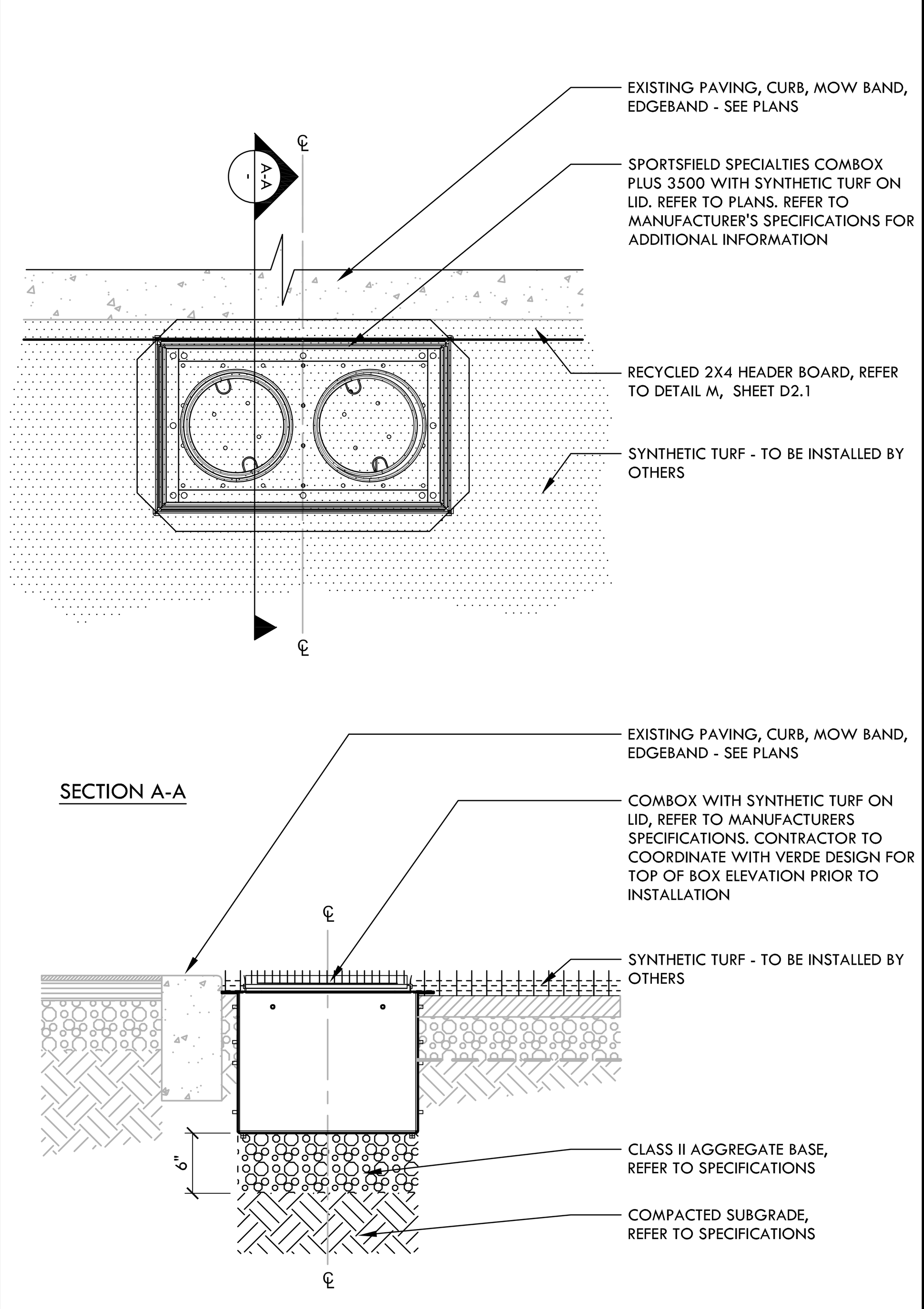

Q ELECTRICAL COMBOX NTS

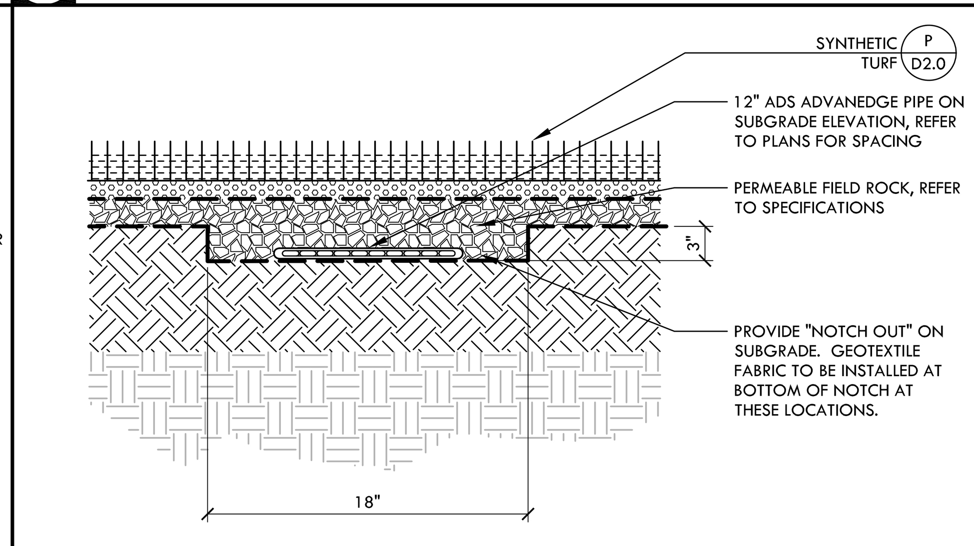

NOTES:
1. CONTRACTOR TO USE MANUFACTURER APPROVED ADAPTERS AND FITTINGS TO CONNECT FLAT DRAIN TO COLLECTION DRAIN.
2. FOR FLAT PANEL CONNECTION TO PERFORATED SUBDRAIN, REFER TO DETAIL N, THIS SHEET.

M FLAT PANEL DRAIN NTS

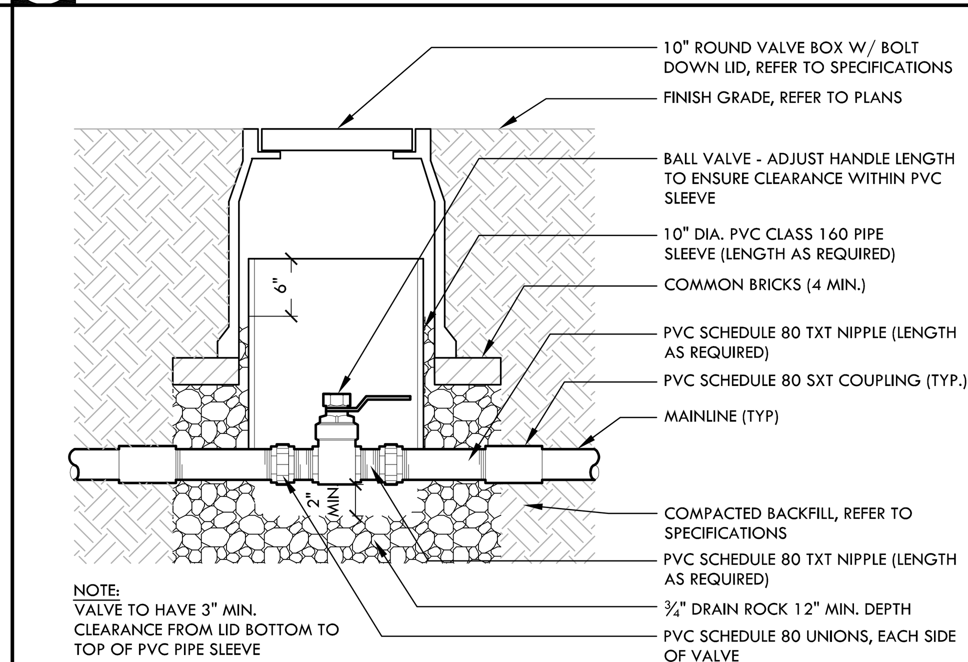

NOTE:
VALVE TO HAVE 3" MIN. CLEARANCE FROM LID BOTTOM TO TOP OF PVC PIPE SLEEVE

I BALL VALVE NTS

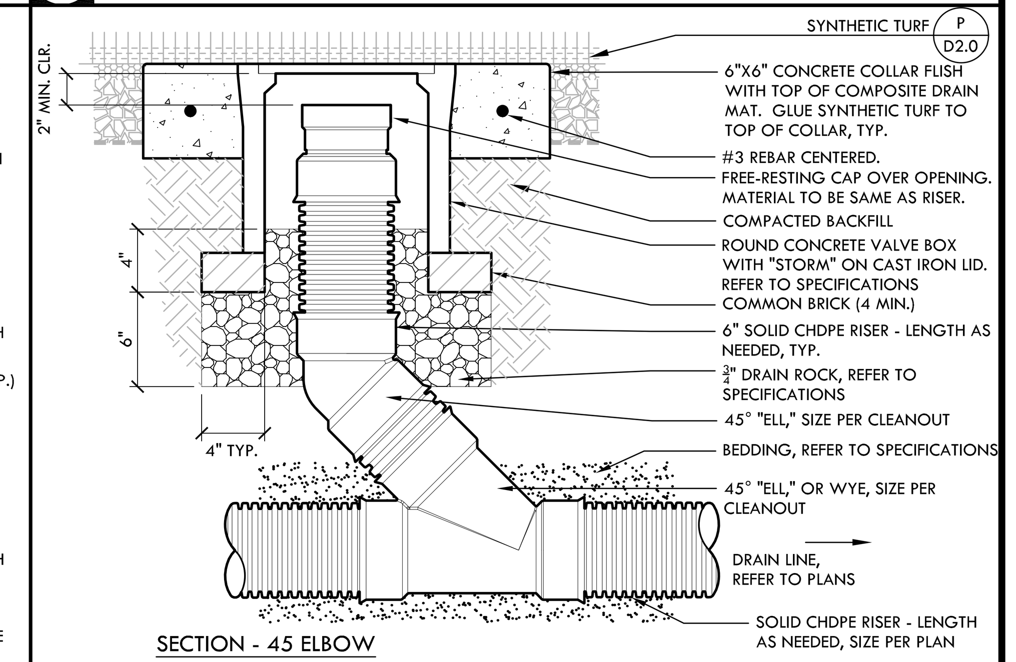

D CLEANOUT IN SYNTHETIC TURF NTS

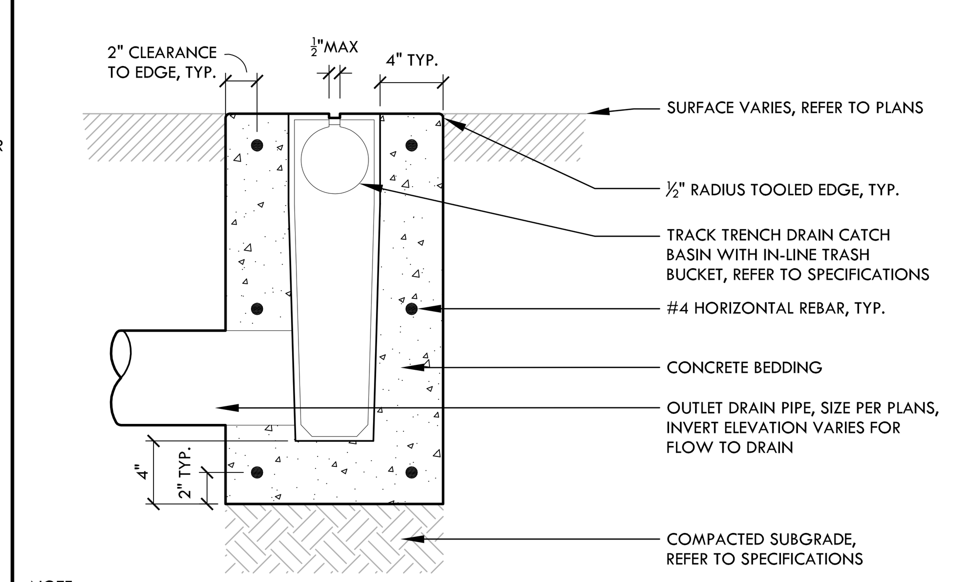

NOTE:
WHERE TRACK SURFACING IS ON BOTH SIDES OF TRENCH DRAIN, TRACK SURFACING SHALL EXTEND UP TO DRAIN CHANNEL OPENING.

L INLINE TRENCH DRAIN CATCH BASIN AT TENNIS COURTS

NOT USED

H

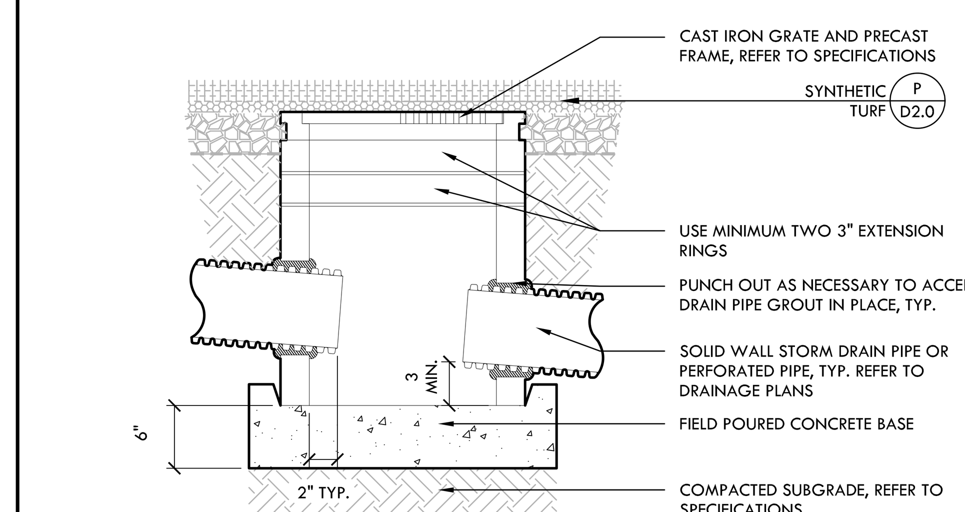

NOTES
1. SET BOX COVER TO TOP OF PERMEABLE ROCK BASE ELEVATION. VERIFY EXACT LOCATION AND RIM ELEVATION PRIOR TO INSTALLATION.
2. POSITIVE DRAINAGE TO INLET SHALL BE VERIFIED BY CONTRACTOR.
3. ALL PIPING ENTRIES AND EXITS INTO DRAINAGE STRUCTURES SHALL BE GROUTED SMOOTH AND WATERTIGHT USING NON-SHRINK GROUT TYP.
4. ALL RISERS AND EXTENSIONS SHALL BE CONNECTED WITH AN ADHESIVE PRODUCT (RAMNEK OR EQUIVALENT).
5. DO NOT CUT A HOLE IN TURF FOR JUNCTION BOX.

C JUNCTION BOX NTS

NOT USED

P

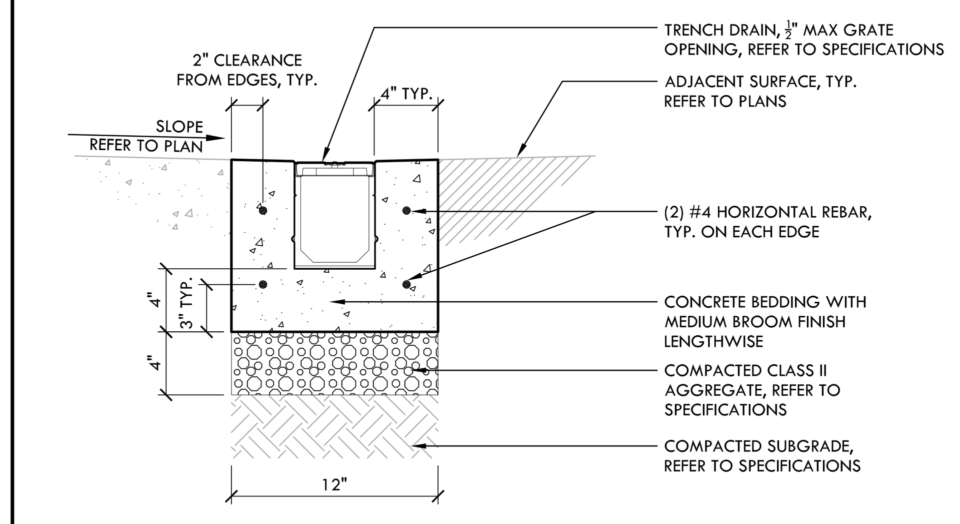

NOTE:

1. PROVIDE SAW CUT JOINT 8' ON CENTER AND ALIGN WITH FENCE POSTS.
2. JOINTS TO BE ON BOTH SIDE OF GRATE.

K TRENCH DRAIN AT TENNIS NTS

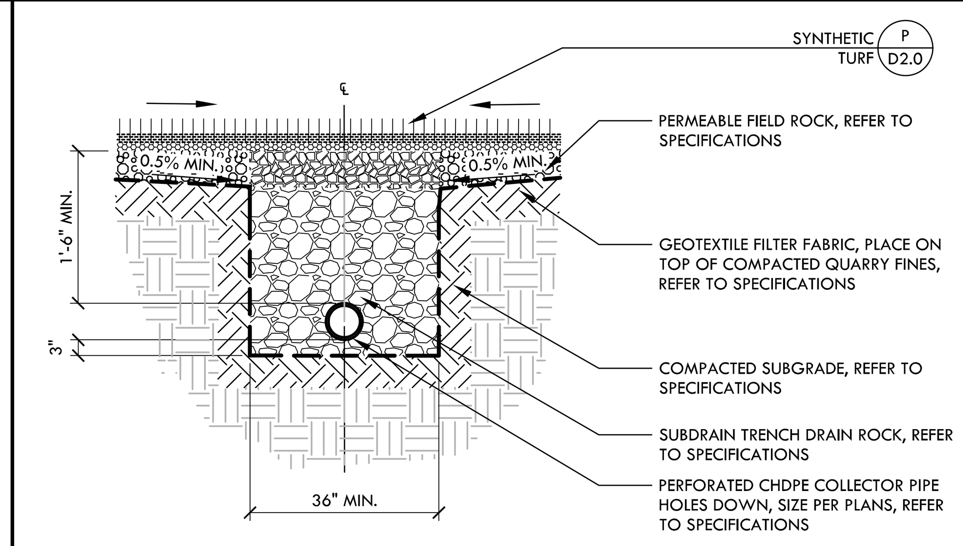

NOTES:
1. CONTRACTOR MAY UTILIZE UP TO 1/4" X 1/8" VIRGIN CRUSHED STONE (OR EQUIVALENT PERMEABLE VIRGIN STONE APPROVED BY ENGINEER) ON TOP OF THE SUBDRAIN TRENCH ROCK TO ACHIEVE PLANARITY.
2. CONTRACTOR TO SLOPE FIELD 0.5% TOWARD SUBDRAIN TRENCH FROM FIELD EDGE, TYPICAL.

G PERFORATED SUBDRAIN LINE NTS

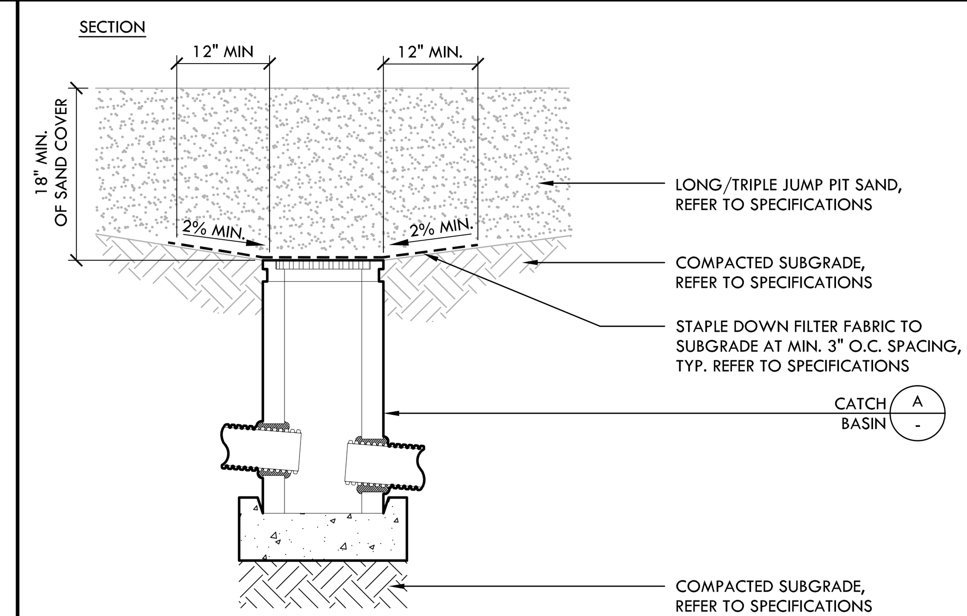

B CATCH BASIN IN SAND PIT NTS

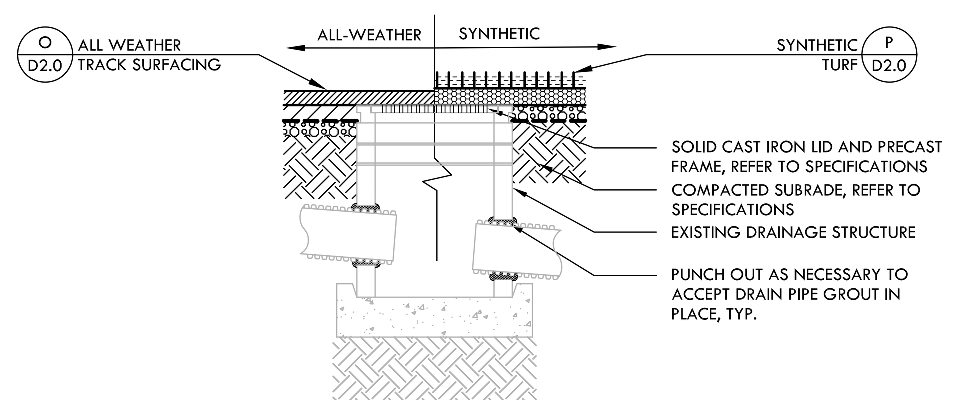

NOTES:
1. SET CATCH BASIN RIM FLUSH WITH TOP OF ASPHALT IF LOCATED IN ALL-WEATHER TRACK SURFACING. SET CATCH BASING RIM FLUSH WITH TOP OF ROCK IF LOCATED IN SYNTHETIC TURF.
2. DRAINAGE PAD TO BE CUT TO FIT SOLID COVER.
3. ALL PIPING ENTRIES AND EXITS INTO DRAINAGE STRUCTURES SHALL BE GROUTED SMOOTH AND WATERTIGHT USING NON-SHRINK GROUT, TYP.
4. ALL RISERS AND EXTENSIONS SHALL BE CONNECTED WITH AN ADHESIVE PRODUCT (RAMNEK OR EQUIVALENT)
5. TURF SHALL BE INSTALLED WITH A WHITE FOUR (4) INCH DOT CENTERED OVER DRAIN BOX.
6. ENSURE PROPER COMPACTION AROUND BASIN IN SYNTHETIC TURF TO PREVENT SETTLING AROUND EDGE.

O MODIFIED CATCH BASIN NTS

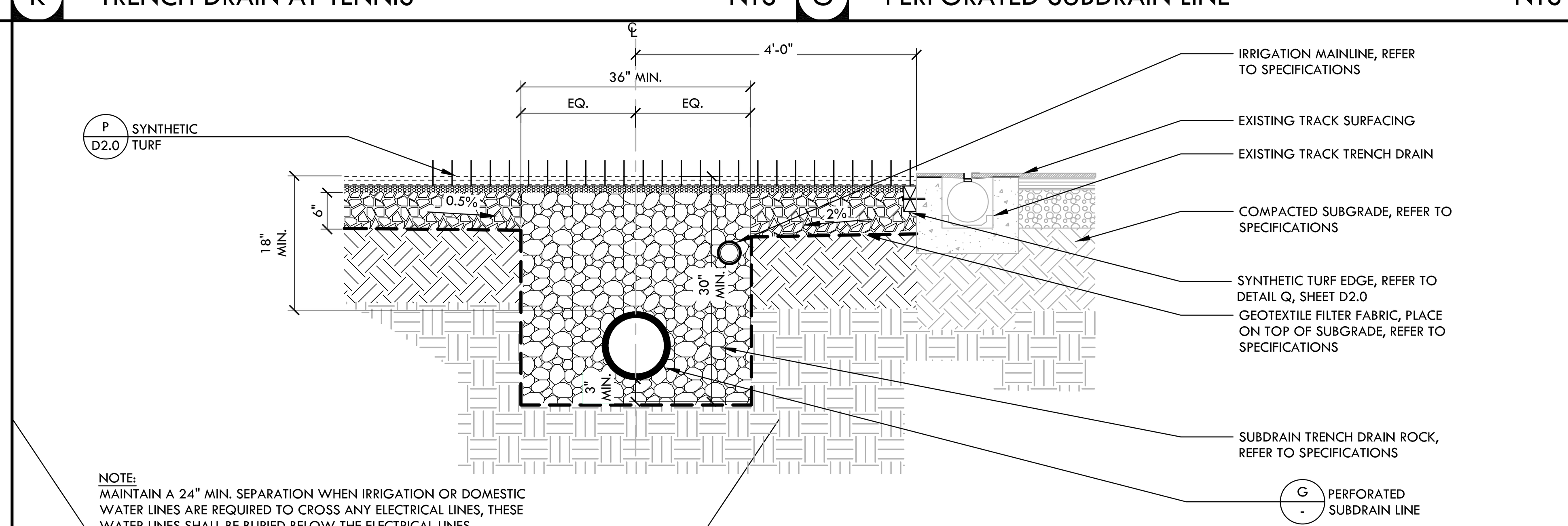

NOTE:
MAINTAIN A 24" MIN. SEPARATION WHEN IRRIGATION OR DOMESTIC WATER LINES ARE REQUIRED TO CROSS ANY ELECTRICAL LINES, THESE WATER LINES SHALL BE BURIED BELOW THE ELECTRICAL LINES.

F TYPICAL FIELD & PIPE SECTION W/ VERTICAL TRENCH NTS

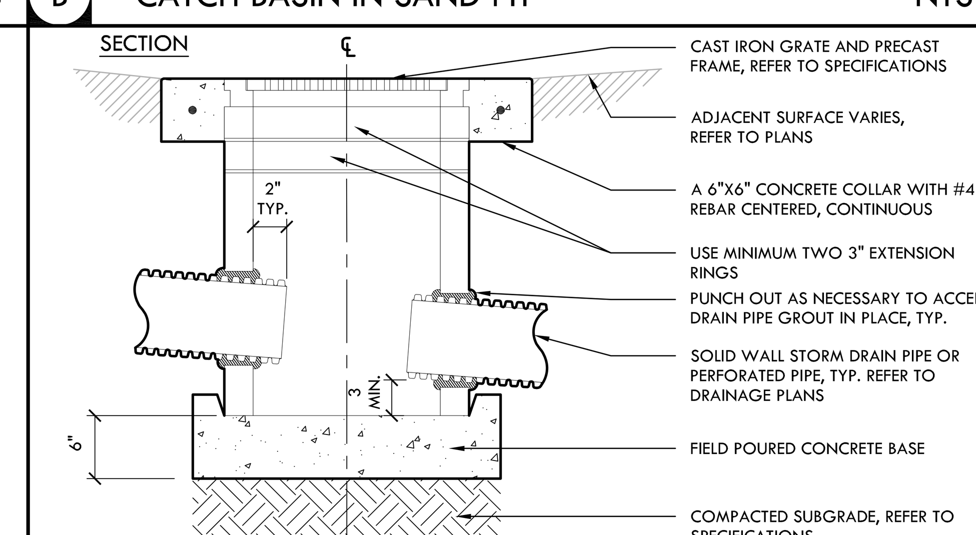

NOTES
1. SET CATCH BASIN RIM FLUSH WITH ADJACENT SURFACE. VERIFY EXACT LOCATION AND RIM PRIOR TO INSTALLATION.
2. POSITIVE DRAINAGE TO INLET SHALL BE VERIFIED BY CONTRACTOR.
3. ALL PIPING ENTRIES AND EXITS INTO DRAINAGE STRUCTURES SHALL BE GROUTED SMOOTH AND WATERTIGHT USING NON-SHRINK GROUT, TYP.
4. ALL RISERS AND EXTENSIONS SHALL BE CONNECTED WITH AN ADHESIVE PRODUCT (RAMNEK OR EQUIVALENT).
5. ALL GRATES SHALL BE FITTED WITH LOCK-DOWN MECHANISMS OR BOLT-DOWN COVERS.

A CATCH BASIN NTS

VERDE DESIGN
LANDSCAPE ARCHITECTURE
CIVIL ENGINEERING
SPORT PLANNING & DESIGN
2455 The Alameda
Santa Clara, CA 95050
tel: 408.985.7200
fax: 408.985.7260
www.VerdeDesignInc.com

STAMP

REGISTERED PROFESSIONAL ENGINEER
DEVIN CONWAY
No. C-56494
Signature
EXPIRATION DATE: June 30, 2019
STATE OF CALIFORNIA

CONSULTANT

SHEET TITLE
DRAINAGE AND UTILITY DETAILS

PROJECT NAME
COLLEGE OF MARIN ATHLETIC FACILITIES IMPROVEMENTS

PROJECT ADDRESS
835 COLLEGE AVE.
KENTFIELD, CA
94904

SUBMITTAL	DATE
80% CD SUBMITTAL	06/16/17
100% SUBMITTAL	06/30/17

NO.	REVISIONS	DATE
△		
△		
△		
△		
△		
△		

DRAWN BY	CHECKED BY
VERDE	DC
DATE ISSUED	SCALE
06/30/17	NTS

PROJ. NO. 1702200

SHEET NO. D1.0

DRAINAGE AND UTILITY DETAILS

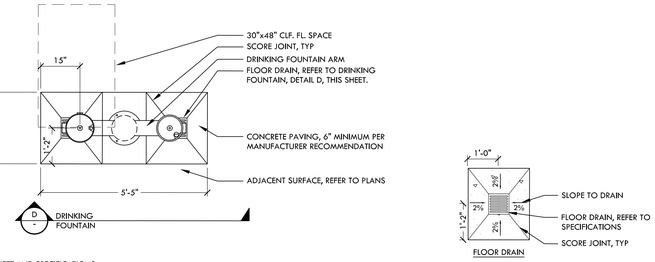

NOTES:
1. REFER TO DRINKING FOUNTAIN, DETAIL D, THIS SHEET AND SPECIFICATIONS.
2. FOUNTAIN TO BE INSTALLED SHALL HAVE SAME DIRECTION OF APPROACH FOR BOTH HI & LO USERS.
3. DRINKING FOUNTAIN BUTTONS TO FACE TOWARD APPROACH.

E DRINKING FOUNTAIN (PLAN) NTS

NOTES:
1. REFER TO DRINKING FOUNTAIN PLAN VIEW, DETAIL E, THIS SHEET AND SPECIFICATIONS.
2. CONNECT 4" PVC PIPE FROM FLOOR DRAIN TO MAIN FOUNTAIN DRAIN LINE.
3. DRINKING FOUNTAIN COLOR TO BE BLACK.
4. 8"X8" FLOOR DRAIN, REFER TO SPECIFICATIONS.

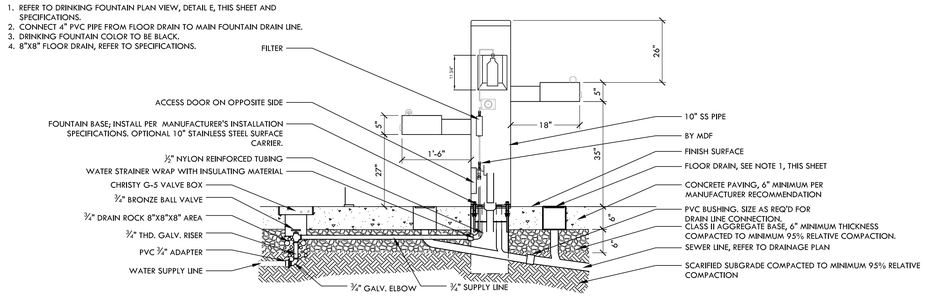

L

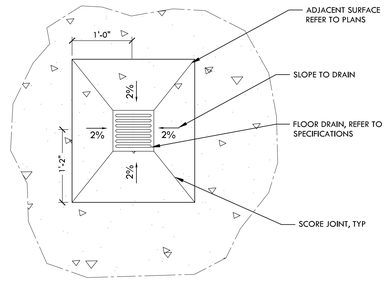

K SHOWER FLOOR DRAIN NTS

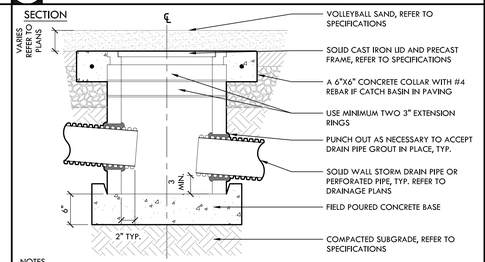

NOTES
1. POSITIVE DRAINAGE TO INLET SHALL BE VERIFIED BY CONTRACTOR.
2. ALL PIPING ENTRIES AND EXITS INTO DRAINAGE STRUCTURES SHALL BE GROUTED SMOOTH AND WATERTIGHT USING NON-SHRINK GROUT, TYP.
3. ALL RISERS AND EXTENSIONS SHALL BE CONNECTED WITH AN ADHESIVE PRODUCT (RAMNEK OR EQUIVALENT).
4. ALL GRATES SHALL BE FITTED WITH LOCK-DOWN MECHANISMS OR BOLT-DOWN COVERS.

D DRINKING FOUNTAIN NTS

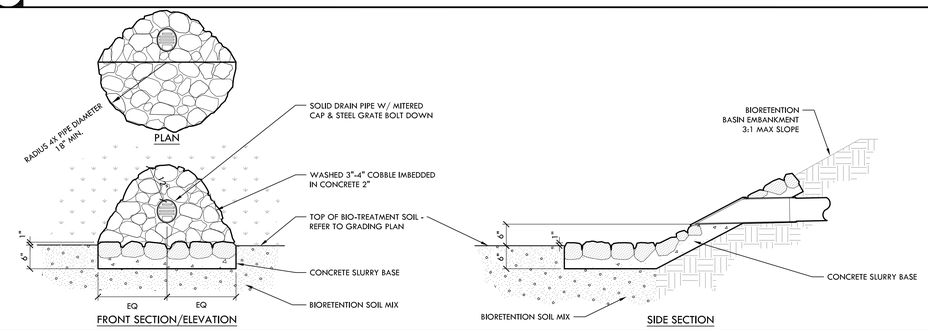

J JUNCTION BOX IN SAND NTS

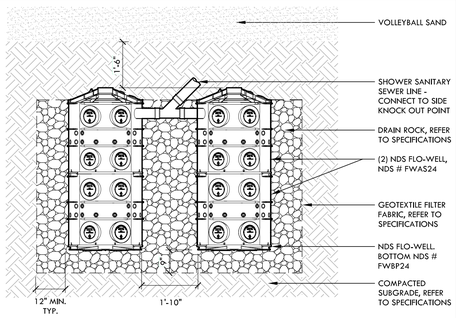

C COBBLE ENERGY DISSIPATOR NTS

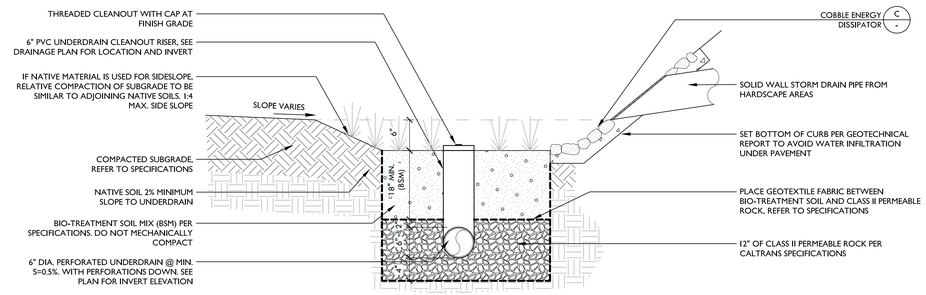

I DRYWELL - OUTDOOR SHOWER NTS

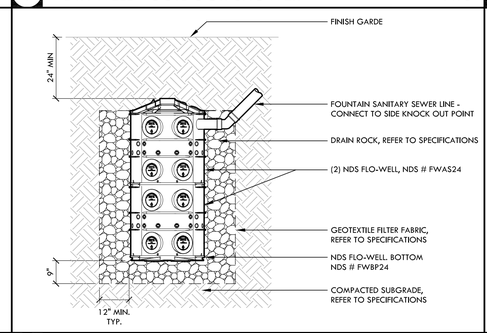

B BIOFILTRATION AREA - SECTION (CROSSWISE) NTS

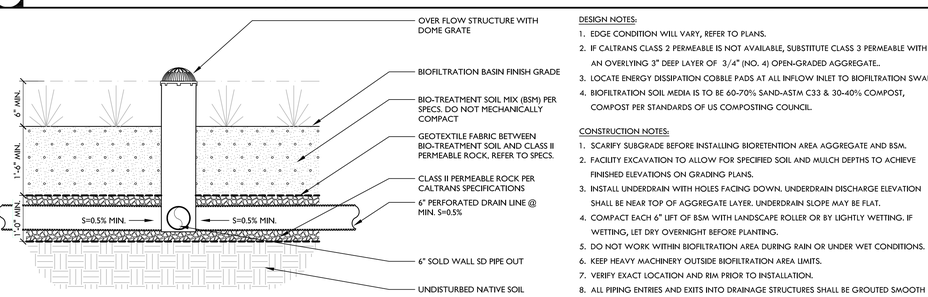

DESIGN NOTES:
1. EDGE CONDITION WILL VARY, REFER TO PLANS.
2. IF CALTRANS CLASS 2 PERMEABLE IS NOT AVAILABLE, SUBSTITUTE CLASS 3 PERMEABLE WITH AN OVERLYING 3" DEEP LAYER OF 3/4" (NO. 4) OPEN-GRADED AGGREGATE..
3. LOCATE ENERGY DISSIPATION COBBLE PADS AT ALL INFLOW INLET TO BIOFILTRATION SWALE
4. BIOFILTRATION SOIL MEDIA IS TO BE 60-70% SAND-ASTM C33 & 30-40% COMPOST, COMPOST PER STANDARDS OF US COMPOSTING COUNCIL.

CONSTRUCTION NOTES:
1. SCARIFY SUBGRADE BEFORE INSTALLING BIORETENTION AREA AGGREGATE AND BSM.
2. FACILITY EXCAVATION TO ALLOW FOR SPECIFIED SOIL AND MULCH DEPTHS TO ACHIEVE FINISHED ELEVATIONS ON GRADING PLANS.
3. INSTALL UNDERDRAIN WITH HOLES FACING DOWN. UNDERDRAIN DISCHARGE ELEVATION SHALL BE NEAR TOP OF AGGREGATE LAYER. UNDERDRAIN SLOPE MAY BE FLAT.
4. COMPACT EACH 6" LIFT OF BSM WITH LANDSCAPE ROLLER OR BY LIGHTLY WETTING. IF WETTING, LET DRY OVERNIGHT BEFORE PLANTING.
5. DO NOT WORK WITHIN BIOFILTRATION AREA DURING RAIN OR UNDER WET CONDITIONS.
6. KEEP HEAVY MACHINERY OUTSIDE BIOFILTRATION AREA LIMITS.
7. VERIFY EXACT LOCATION AND RIM PRIOR TO INSTALLATION.
8. ALL PIPING ENTRIES AND EXITS INTO DRAINAGE STRUCTURES SHALL BE GROUTED SMOOTH AND WATERTIGHT USING NON-SHRINK GROUT, TYP.
9. ALL LIDS/GRATES SHALL BE FITTED WITH BOLT OR LOCK-DOWN MECHANISMS.

H DRYWELL - DRINKING FOUNTAIN NTS

A BIOFILTRATION AREA - SECTION (LENGTHWISE) NTS

VERDE DESIGN
LANDSCAPE ARCHITECTURE
CIVIL ENGINEERING
SPORT PLANNING & DESIGN
2455 The Alameda
Santa Clara, CA 95050
tel: 408.985.7200
fax: 408.985.7260
www.VerdeDesigninc.com

STAMP

REGISTERED PROFESSIONAL ENGINEER
DUSTIN CONROY
No. C-56494
Signature
EXPIRATION DATE June 30, 2019
STATE OF CALIFORNIA

CONSULTANT

SHEET TITLE
DRAINAGE AND UTILITY DETAILS

PROJECT NAME
COLLEGE OF MARIN ATHLETIC FACILITIES IMPROVEMENTS

PROJECT ADDRESS
835 COLLEGE AVE.
KENTFIELD, CA
94904

SUBMITTAL	DATE
80% CD SUBMITTAL	06/16/17
100% SUBMITTAL	06/30/17

NO.	REVISIONS	DATE

DRAWN BY	CHECKED BY
	DC
DATE ISSUED 06/30/17	SCALE NTS
PROJ. NO. 1702200	
SHEET NO. D1.1	

ALL IDEAS, DESIGNS, ARRANGEMENTS, AND PLANS INDICATED OR REPRESENTED BY THIS DRAWING ARE OWNED BY AND THE PROPERTY OF VERDE DESIGN, INC. AND WERE CREATED, EVOLVED, AND DEVELOPED FOR USE ON AND IN CONNECTION WITH THE SPECIFIED PROJECT. NONE OF SUCH IDEAS, DESIGNS, ARRANGEMENTS OR PLANS SHALL BE USED, REPRODUCED, OR PUBLISHED BY ANY METHOD, IN WHOLE OR IN PART, OR DISCLOSED TO ANY PERSON, FIRM, OR CORPORATION FOR ANY PURPOSE WHATSOEVER WITHOUT THE WRITTEN PERMISSION OF VERDE DESIGN, INC.

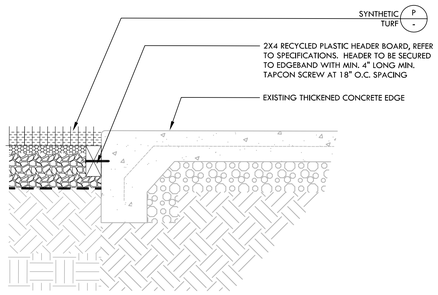

S SYNTHETIC TURF CONNECTION AT EXISTING THICKENED CONCRETE EDGE — NTS

NOT USED

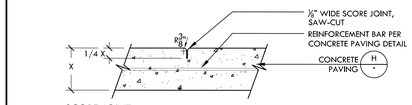

SCORE JOINT
SECTION

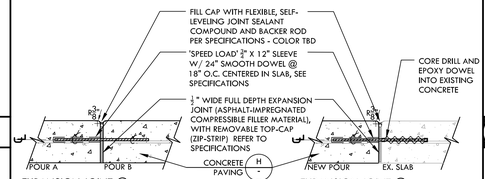

EXPANSION JOINT @ NEW CONCRETE
SECTION

EXPANSION JOINT @ EXISTING CONCRETE
SECTION

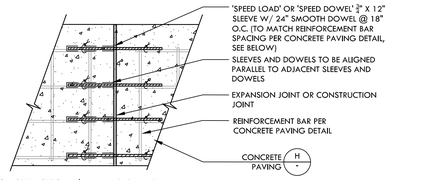

CONSTRUCTION / EXPANSION JOINT
PLAN

I CONCRETE JOINTS — NTS

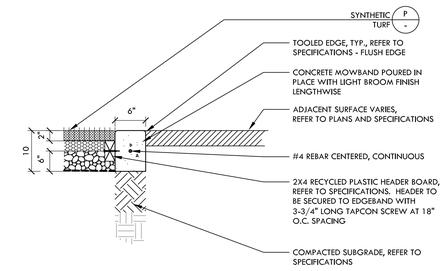

NOTE:
REFER TO EDGEBAND AND TALL CURB NOTES DETAIL A, THIS SHEET.

E 6" WIDE EDGEBAND AT SYNTHETIC TURF EDGE — NTS

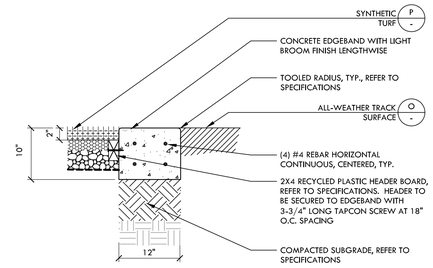

NOTE:
REFER TO EDGEBAND AND TALL CURB NOTES DETAIL A, THIS SHEET.

D 12" WIDE EDGEBAND AT SYNTHETIC TURF EDGE — NTS

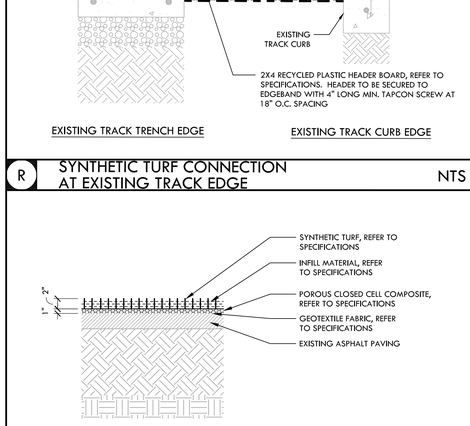

NOTES:
1. REFER TO EDGEBAND AND TALL CURB NOTES DETAIL A, THIS SHEET.
2. INSTALL EXPANSION JOINTS AT ALL CORNERS, BEGINNINGS, AND ENDINGS OF RADII, AND AT ALL FENCE POSTS.

C 12" WIDE EDGEBAND IN FENCE — NTS

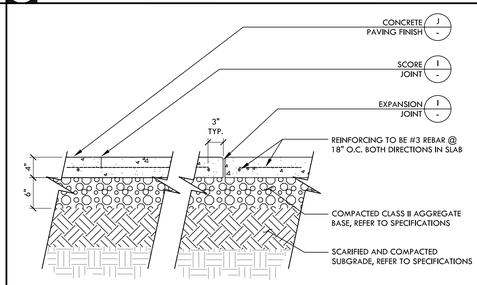

NOTE:
1. CONCRETE PAVING TO BE MEDIUM BROOM FINISH, PERPENDICULAR TO PATH OF TRAVEL OR AS NOTED OTHERWISE.
2. FOR COLOR CONCRETE, REFER TO SPECIFICATIONS.

H CONCRETE PAVING — NTS

NOTE:
IDENTIFIED FINISH GRADES OF SYNTHETIC TURF SHALL BE THE TOP OF INFILL MATERIAL. TOP OF INFILL MATERIAL SHALL BE BETWEEN 1/4" AND 1/2" BELOW ADJACENT ACCESSIBLE SURFACES.

Q SYNTHETIC TURF AT FUTSAL FIELD — NTS

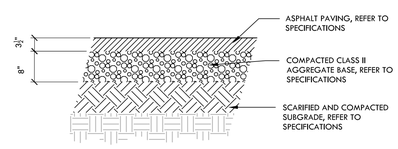

L ASPHALT PAVING - VEHICULAR — NTS

K ASPHALT PAVING - PEDESTRIAN — NTS

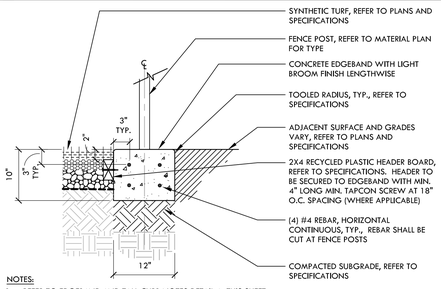

NOTES:
1. REFER TO EDGEBAND AND TALL CURB NOTES DETAIL A, THIS SHEET.
2. WHERE EDGEBAND IS ADJACENT TO TRACK SURFACE, TRACK SURFACE SHALL COVER THE EDGEBAND.

F 9" WIDE EDGEBAND AT SYNTHETIC TURF EDGE — NTS

NOTES PERTAIN TO ALL EDGEBAND AND CURB DETAILS:
1. FOR EDGEBANDS AND CURBS WITH FENCING, INSTALL EXPANSION JOINTS AT ALL CORNERS, BEGINNINGS, AND ENDINGS OF RADII, AND AT ALL FENCE POSTS. INSTALL SCORE JOINTS AT 5' O.C. AND OR EVENLY SPACED AND CENTERED BETWEEN POSTS.
2. FOR EDGEBAND AND CURBS WITHOUT FENCING, INSTALL SCORE JOINTS AT 10' O.C. SPACING AND FIBER EXPANSION JOINTS EVERY 20' ON STRAIGHT RUNS. ON CURVED RUNS, FIBER EXPANSION JOINTS SHALL BE SPACED 10' O.C., WITH ALTERNATING SCORE JOINTS AT 5' O.C. SPACING.
3. ALL EXPANSION JOINTS SHALL BE SEALED, PER SPECIFICATIONS.

NOTES PERTAIN TO ALL TALL CURB DETAILS:
1. PROVIDE EXPANSION JOINTS AT 16' O.C. SPACING, CENTERED BETWEEN FENCE POSTS.
2. PROVIDE EXPANSION JOINTS AT EACH LOCATION WHERE AN ELEVATION STEP OCCURS BETWEEN CHANGING CURB/EDGEBAND TYPES.
3. AT EXPANSION JOINTS, PROVIDE A 24" LONG #4 DOWEL AT EACH CURB HORIZONTAL REBAR, CENTERED ON THE JOINT, AS PER DETAIL.
4. EXPANSION JOINTS SHALL BE INSTALLED WITH A 3/4" CHAMFER BUILT INTO THE FORM WORK, IN ADDITION TO THE FIBER EXPANSION JOINT MATERIAL.
5. PROVIDE A CONTROL JOINT AT EACH FENCE POST. THE VERTICAL JOINT SHALL BE A 3/4" CHAMFER BUILT INTO THE FORM WORK. THE HORIZONTAL JOINT, ALONG THE TOP OF CURB, SHALL BE A TOOLED SCORE JOINT, ALIGNED WITH AND MATCHING THE VERTICAL CHAMFER JOINT.
6. ALL EXPANSION JOINTS SHALL BE SEALED PER SPECIFICATION.
7. NO SCORE JOINTS ARE REQUIRED ON TALL CURBS, EXCEPT AS INDICATED AT EACH FENCE POST IN ITEM #5 ABOVE.

FINISHES
EDGEBANDS AND CURBS: MEDIUM BROOM FINISH
WALL AND TALL CURBS: MEDIUM SAND BLAST - TOP AND SIDES MEDIUM BROOM FINISH

A EDGEBAND AND CURB NOTES — NTS

	BASEBALL	SOCCER	FUTSAL	P.E.	BBALL CAGE
TURF HEIGHT	1-3/4"	2"	2"	2"	2"
COMPOSITE HEIGHT	1/2"	1/2"	1"	1/2"	1/2"

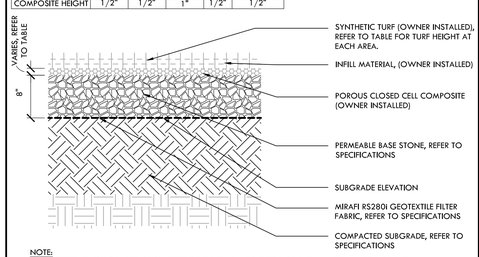

NOTE:
1. IDENTIFIED FINISH GRADES OF SYNTHETIC TURF SHALL BE THE TOP OF INFILL MATERIAL. TOP OF INFILL MATERIAL SHALL BE 1/2" BELOW ADJACENT ACCESSIBLE SURFACES.
2. WARNING TRACK OF BASEBALL TO HAVE 'CRUNCHES' IN INFILL MIX, REFER TO SPECIFICATIONS.

P SYNTHETIC TURF — NTS

NOT USED

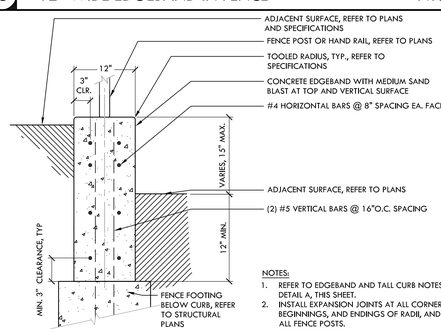

NOTES:
1. REFER TO EDGEBAND AND TALL CURB NOTES DETAIL A, THIS SHEET.
2. INSTALL EXPANSION JOINTS AT ALL CORNERS, BEGINNINGS, AND ENDINGS OF RADII, AND AT ALL FENCE POSTS.

B CURB - TYPE 1 — NTS

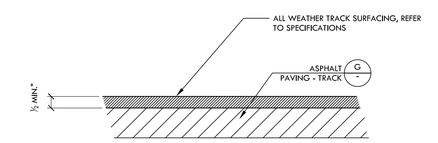

NOTE:
TRACK SURFACING SHALL BE ADHERED A MINIMUM OF 3" ONTO ADJACENT TRACK CONCRETE EDGEBANDS AND/OR TRACK DRAINS.

O ALL-WEATHER TRACK SURFACING — NTS

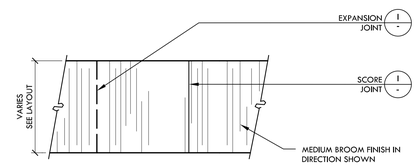

NOTE:
PROVIDE SCORE JOINTS 5' O.C. AND 10' O.C. FOR KEYED KOLD OR FIBER EXPANSION JOINT UNLESS OTHERWISE NOTED.

J CONCRETE PAVING FINISH — NTS

VERDE DESIGN
LANDSCAPE ARCHITECTURE
CIVIL ENGINEERING
SPORT PLANNING & DESIGN
2455 The Alameda
Santa Clara, CA 95050
tel: 408.985.7200
fax: 408.985.7260
www.VerdeDesigninc.com

STAMP

REGISTERED PROFESSIONAL ENGINEER
DUSTIN CORBETT
No. C-56494
Signature
EXPIRATION DATE
June 30, 2019
STATE OF CALIFORNIA

CONSULTANT

SHEET TITLE
CONSTRUCTION DETAILS

PROJECT NAME
COLLEGE OF MARIN ATHLETIC FACILITIES IMPROVEMENTS

PROJECT ADDRESS
835 COLLEGE AVE.
KENTFIELD, CA
94904

SUBMITTAL	DATE
80% CD SUBMITTAL	06/16/17
100% SUBMITTAL	06/30/17

NO.	REVISIONS	DATE

DRAWN BY	CHECKED BY
KL	DC
DATE ISSUED	SCALE
06/30/17	NTS

PROJ. NO.
1702200

SHEET NO.
D2.0

ALL IDEAS, DESIGNS, ARRANGEMENTS, AND PLANS INDICATED OR REPRESENTED BY THIS DRAWING ARE OWNED BY AND THE PROPERTY OF VERDE DESIGN, INC. AND WERE CREATED, EVOLVED, AND DEVELOPED FOR USE ON AND IN CONNECTION WITH THE SPECIFIED PROJECT. NONE OF SUCH IDEAS, DESIGNS, ARRANGEMENTS OR PLANS SHALL BE USED, REPRODUCED, OR PUBLISHED BY ANY METHOD, IN WHOLE OR IN PART, OR DISCLOSED TO ANY PERSON, FIRM, OR CORPORATION WITHOUT THE WRITTEN PERMISSION OF VERDE DESIGN, INC.

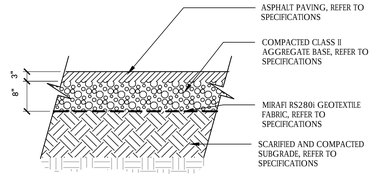

G ASPHALT PAVING - TRACK NTS

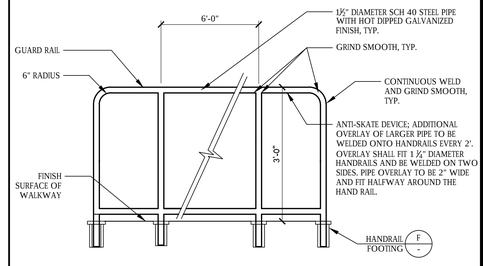

NOTES:
1. THIS DRAWING IS FOR DESIGN INTENT ONLY. SUBMIT SHOP DRAWING TO SHOW MATERIAL, WELDS AND FASTENERS.
2. ALL PIPE TO BE SCHEDULE 40 WITH ⅛" THICKNESS, & SHALL BE GALVANIZED FINISH.
3. ALL JOINTS SHALL BE FILLET WELD; GRIND SMOOTH JOINTS; TREAT ALL FINISHED WELDS WITH GALVANIZING.
4. ALL RAILINGS TO BE SHOP FABRICATED FOR FIELD INSTALLATION.

E GUARD RAIL NTS

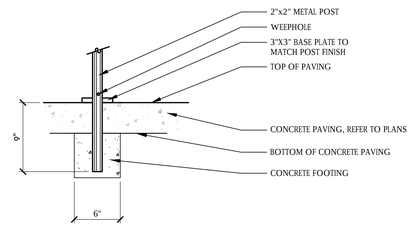

F GUARD/HAND RAIL POST MOUNT NTS

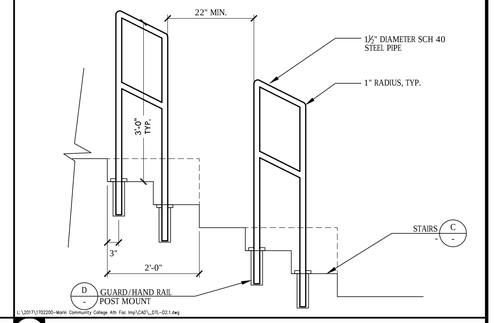

D HAND RAIL NTS

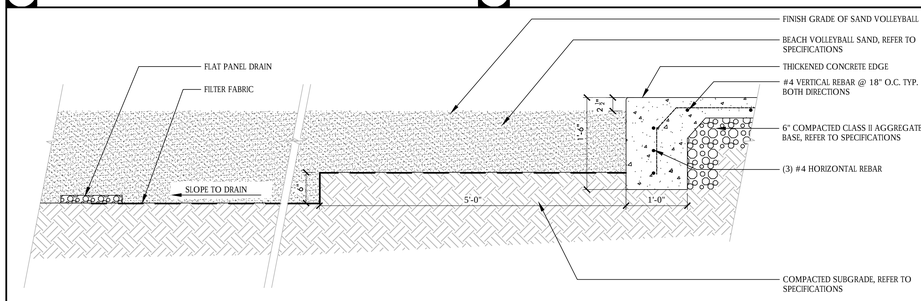

J BEACH VOLLEYBALL SAND SECTION NTS

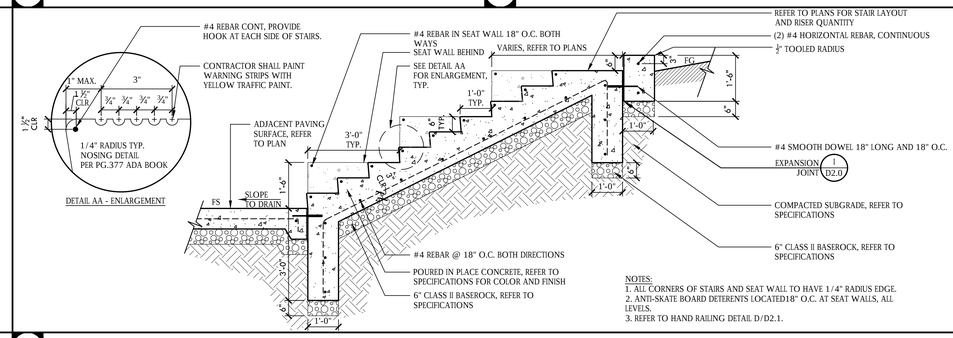

NOTES:
1. ALL CORNERS OF STAIRS AND SEAT WALL TO HAVE 1/4" RADIUS EDGE.
2. ANTI-SKATE BOARD DETERENTS LOCATED18" O.C. AT SEAT WALLS, ALL LEVELS.
3. REFER TO HAND RAILING DETAIL D/D2.1.

C CONCRETE SEATING - SECTION NTS

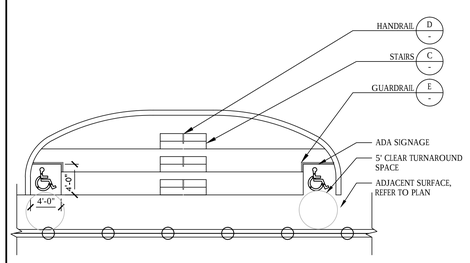

N CONCRETE SEATING - PLAN

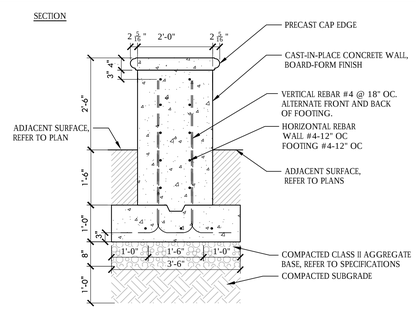

I CONCRETE PLINTH - SECTION NTS

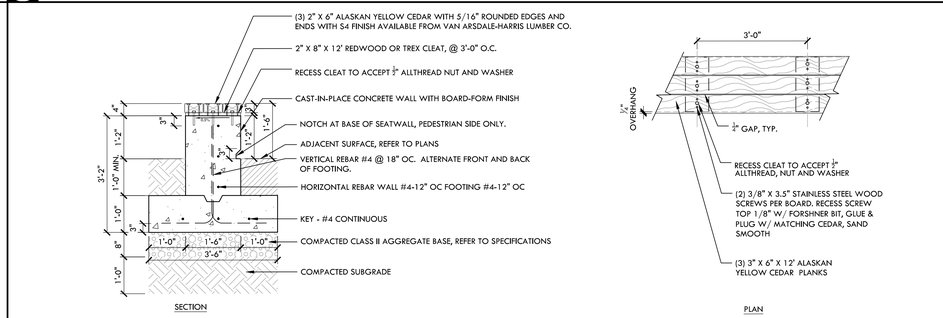

B CONCRETE SEATWALL WITH WOOD SEAT

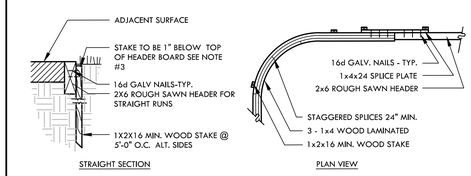

NOTES:
1. USE CURVED DETAIL WHEN RADIUS IS LESS THAN 30' & BOARD LENGTH IS LESS THAN 16'
2. ALL WOOD TO BE ROUGH SAWN REDWOOD CONST. GRADE
3. FINISH GRADE OF PLANTING AREA 1" BELOW TOP OF HEADER.
4. TAPER FINISH GRADE TO 1" WITHIN 4'-0" OF HEADER BOARD.

M REDWOOD HEADER BOARD NTS

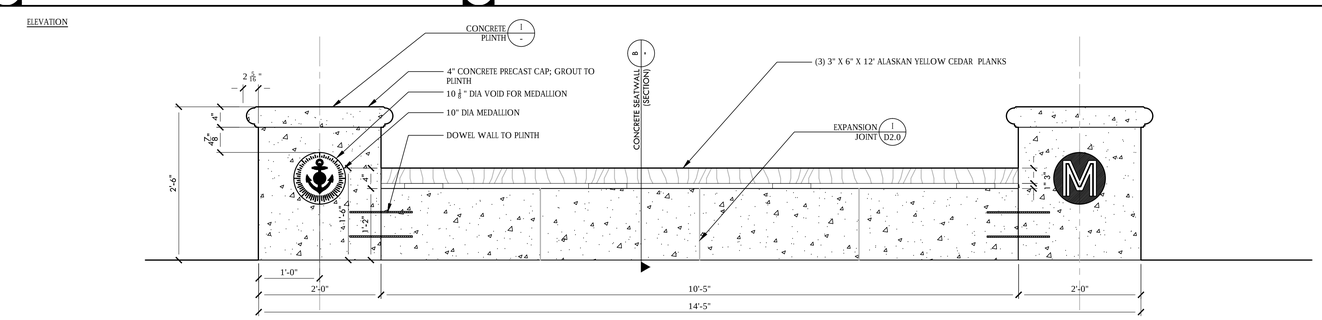

A CONCRETE SEATWALL WITH WOOD SEAT AND PLINTHS ELEVATION NTS

ALL IDEAS, DESIGN, ARRANGEMENTS, AND PLANS INDICATED OR REPRESENTED BY THIS DRAWING ARE OWNED BY AND THE PROPERTY OF VERDE DESIGN, INC. AND WERE CREATED, EVOLVED, AND DEVELOPED FOR USE ON AND IN CONNECTION WITH THE SPECIFIED PROJECT. NONE OF SUCH IDEAS, DESIGNS, ARRANGEMENTS OR PLANS SHALL BE USED, REPRODUCED, OR PUBLISHED BY ANY METHOD, IN WHOLE OR IN PART, OR DISCLOSED TO ANY PERSON, FIRM, OR CORPORATION WITHOUT WRITTEN PERMISSION AND CONSENT OF VERDE DESIGN, INC.

VERDE DESIGN
LANDSCAPE ARCHITECTURE
CIVIL ENGINEERING
SPORT PLANNING & DESIGN
2455 The Alameda
Santa Clara, CA 95050
tel: 408.985.7200
fax: 408.985.7260
www.VerdeDesigninc.com

STAMP

REGISTERED PROFESSIONAL ENGINEER
DEVIN CONROY
No. C-56404
Signature
EXPIRATION DATE
June 30, 2018
STATE OF CALIFORNIA

CONSULTANT

SHEET TITLE
CONSTRUCTION DETAILS

PROJECT NAME
COLLEGE OF MARIN ATHLETIC FACILITIES IMPROVEMENTS

PROJECT ADDRESS
835 COLLEGE AVE.
KENTFIELD, CA
94904

SUBMITTAL	DATE
80% CD SUBMITTAL	06/16/17
100% SUBMITTAL	06/30/17

NO.	REVISIONS	DATE

DRAWN BY	CHECKED BY
KL	DC
DATE ISSUED 06/30/17	SCALE NTS

PROJ. NO. 1702200

SHEET NO. D2.1

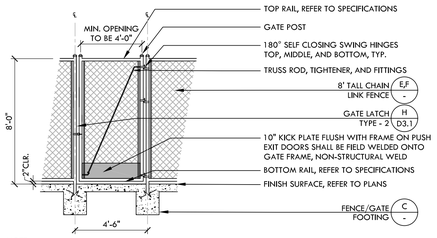

NOTE:
SEE GENERAL GATE NOTES ON THIS SHEET, DETAIL A.

P 8' TALL X 4' WIDE SWING CHAIN LINK GATE NTS

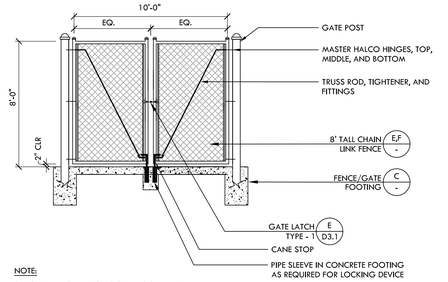

NOTE:
SEE GENERAL GATE NOTES ON THIS SHEET, DETAIL A.

N 8' TALL X 10' WIDE DOUBLE SWING CHAIN LINK GATE

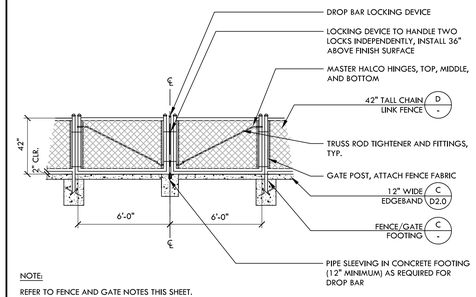

NOTE:
REFER TO FENCE AND GATE NOTES THIS SHEET.

I 42" TALL X 12' WIDE DOUBLE SWING CHAIN LINK GATE

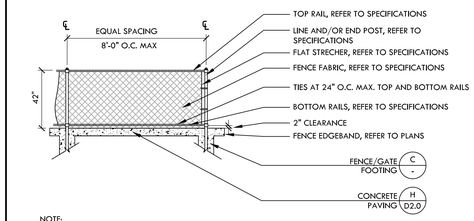

NOTE:
SEE GENERAL FENCE AND GATE NOTES ON THIS SHEET, DETAIL A.

D 42" TALL CHAIN LINK FENCE NTS

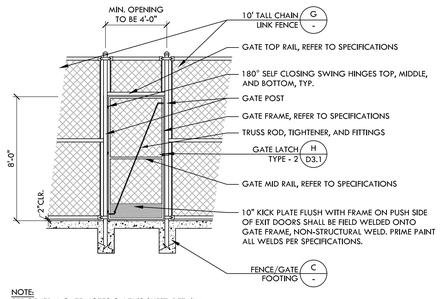

NOTE:
SEE GENERAL GATE NOTES ON THIS SHEET, DETAIL A.

O 10' TALL X 4' WIDE SWING CHAIN LINK GATE NTS

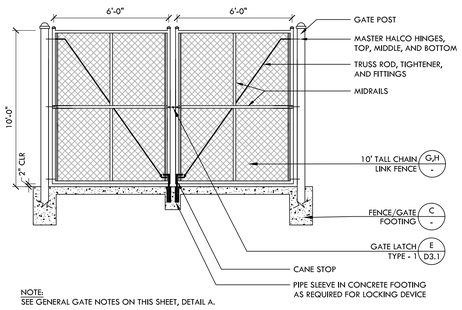

NOTE:
SEE GENERAL GATE NOTES ON THIS SHEET, DETAIL A.

M 10' TALL X 12' WIDE DOUBLE SWING CHAIN LINK GATE NTS

NOT USED

H

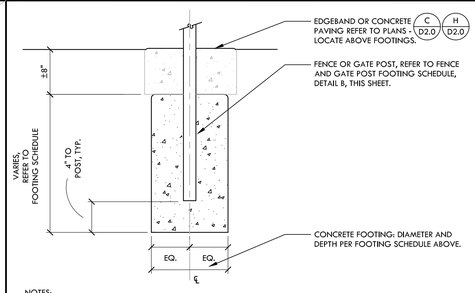

NOTES:
1. FOOTING DEPTH TO BE MEASURED FROM LOWEST ADJACENT SURFACE GRADE.
2. FOOTING SHALL BE INSTALLED BELOW THE SECTION OF ANY FENCE EDGEBAND.

C FENCE/GATE FOOTING NTS

NOT USED

L

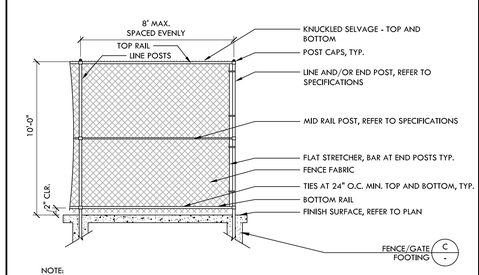

NOTE:
1. SEE GENERAL GATE NOTES ON THIS SHEET, DETAIL A

G 10' TALL CHAIN LINK FENCE NTS

CHAIN LINK FENCES

DESCRIPTION	HEIGHT	LINE POST SIZE (STD. GALV. PIPE)	CORNER/END POST (STD. GALV. PIPE)	POST FOOTING	SPACING (MAX.)
42" CHAIN LINK	3'-6"	1½"	2" DIA. STD. PIPE	12" DIA. X 2'-6" DEEP	8'-0"
8' CHAIN LINK	8'-0"	2 ½"	3" DIA. STD. PIPE	12" DIA. X 3'-6" DEEP	8'-0"
10' CHAIN LINK	10'-0"	3"	4" DIA. STD. PIPE	16" DIA. X 4'-6" DEEP	8'-0"
8' CHAIN LINK W/ WINDSCREEN	8'-0"	3"	3" DIA. STD. PIPE	16" DIA. X 5'-0" DEEP	8'-0"

GATES

DESCRIPTION	SIZE (H x L)	GATE POST (STD. GALV. PIPE)	POST FOOTING	SPACING (MAX.)
42"x12' DOUBLE SWING GATE	3'-6" X 12'	2" DIA. STD.	12" DIA. X 3'-0" DEEP	13'-0"
8'x4' SWING GATE	8' X 4'	2 ½" DIA. STD.	12" DIA. X 3'-6" DEEP	5'-0"
8'x10' DOUBLE SWING GATE	8' X 10'	3" DIA. STD.	12" DIA. X 5'-0" DEEP	11'-0"
8'x20' DOUBLE SWING GATE	8' X 20'	4" DIA. STD.	16" DIA. X 5'-0" DEEP	21'-0"
10'x4' SWING GATE	10' X 4'	3" DIA. STD.	16" DIA. X 4'-6" DEEP	5'-0"
10'x12' DOUBLE SWING GATE	10' X 12'	4" DIA. STD.	16" DIA. X 5'-0" DEEP	13'-0"

ORNAMENTAL FENCES & GATES

DESCRIPTION	HEIGHT/ SIZE (H X L)	GATE OR LINE POST	CORNER/END POST (STD. GALV. PIPE)	POST FOOTING
8' ORNAMENTAL FENCE	8'-0"	2-1/2" SQUARE	3" SQUARE	12" DIA. X 3'-6" DEEP
8'x4' ORNAMENTAL SWING GATE	8' X 4'	2-1/2" SQUARE	N/A	12" DIA. X 6' DEEP
8'x12' ORNAMENTAL DOUBLE SWING GATE	8' X 12'	3" SQUARE	N/A	12" DIA. X 6' DEEP
8'x20' ORNAMENTAL DOUBLE SWING GATE	8' X 20'	4" SQUARE	N/A	16" DIA. X 6.5' DEEP

NOTES:
1. REFER TO PLANS & DETAILS FOR POST LOCATIONS AND TOP OF POST FOOTING.
2. REFER TO FENCE FOOTING DETAILS FOR DESIGN AND CONSTRUCTION.
3. THE PIPE SIZES INDICATED ARE STANDARD PIPE SCHEDULE 40, UNLESS NOTED OTHERWISE.

B FENCE/GATE POST FOOTING SCHEDULE

NOT USED

K

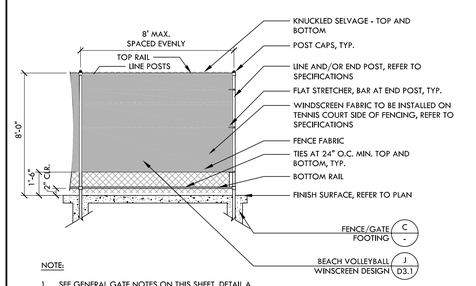

NOTE:
1. SEE GENERAL GATE NOTES ON THIS SHEET, DETAIL A.

F 8' TALL CHAIN LINK FENCE WITH WINDSCREEN NTS

NOTES PERTAIN TO ALL GATE AND FENCE DETAILS:

1. FENCE FABRIC ON PERIMETER OF PLAY FIELD FENCING IS TO BE ON FIELD AND TRACK SIDE.
2. BOTTOM RAIL TO BE 2" ABOVE FINISH GRADE, FENCE FABRIC BOTTOM EDGE TO BE 1" ABOVE FINISH GRADE.
3. SUBMIT SHOP DRAWINGS FOR ACCEPTANCE BY OWNER'S REPRESENTATIVE PRIOR TO INSTALLATION.
4. GATES IN ACCESSIBLE PATH OF TRAVEL MUST MEET ENTRY AND EXIT DOOR REQUIREMENTS FOR ACCESSIBILITY PER 2013 CALIFORNIA BUILDING CODE.
5. FOR PEDESTRIAN GATES , PROVIDE LOCKING DEVICE TO SECURE GATE IN OPEN POSITION.
6. ALL PEDESTRIAN SWING GATES SHALL HAVE A KICK PLATE ATTACHMENT.
7. REFER TO PLANS FOR EDGEBAND TYPE UNLESS OTHERWISE NOTED.
8. REFER TO PLANS AND DETAILS FOR FENCING WITHIN CURBS AND AT CHANGES IN ELEVATION.
9. FOR GATES WITH DROP BAR, PROVIDE 8" DIA. X 12" DEEP FOOTING WITH SCH. 40 STEEL PIPE SLEEVE. CANE STOP TO GO DOWN 4" INTO CONCRETE IN CLOSED POSITION AND OPEN POSITION.
10. TACK WELD HINGES TO POSTS AT GATES.
11. DOUBLE SWING GATES THAT ARE INLINE WITH FENCING, GATE POSTS SHALL BE OFFSET FROM THE FENCE TO ALLOW SWING GATES TO OPEN A FULL 180° BACK AGAINST THE FENCE PER PLAN LAYOUT.
12. THE PIPE SIZES INDICATED ARE NPS FOR STANDARD PIPE SCHEDULE 40.
13. ALL FENCE POST SET IN CONCRETE SHALL BE COATED WITH ONE COAT OF BITUMINOUS PAINT.
14. TOP, MID AND BOTTOM RAIL SIZES IN SPECIFICATIONS.
15. TACWELD POST CAPS.

A GENERAL FENCE & GATE NOTES

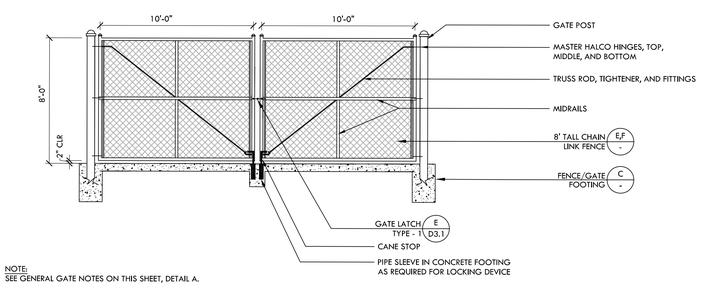

NOTE:
SEE GENERAL GATE NOTES ON THIS SHEET, DETAIL A.

J 8' TALL X 20' WIDE DOUBLE SWING CHAIN LINK GATE NTS

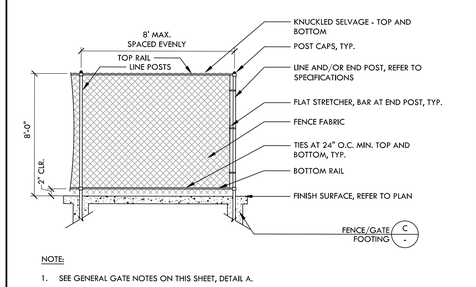

NOTE:
1. SEE GENERAL GATE NOTES ON THIS SHEET, DETAIL A.

E 8' TALL CHAIN LINK FENCE NTS

VERDE DESIGN
LANDSCAPE ARCHITECTURE
CIVIL ENGINEERING
SPORT PLANNING & DESIGN
2455 The Alameda
Santa Clara, CA 95050
tel: 408.985.7200
fax: 408.985.7260
www.VerdeDesigninc.com

STAMP

REGISTERED PROFESSIONAL ENGINEER
DESTIN CONROY
No. C-56494
Signature
EXPIRATION DATE
June 30, 2018
STATE OF CALIFORNIA

CONSULTANT

SHEET TITLE
CONSTRUCTION DETAILS

PROJECT NAME
COLLEGE OF MARIN ATHLETIC FACILITIES IMPROVEMENTS

PROJECT ADDRESS
835 COLLEGE AVE.
KENTFIELD, CA
94904

SUBMITTAL	DATE
80% CD SUBMITTAL	06/16/17
100% SUBMITTAL	06/30/17

NO.	REVISIONS	DATE

DRAWN BY: KL
CHECKED BY: DC
DATE ISSUED: 06/30/17
SCALE: NTS
PROJ. NO.: 1702200
SHEET NO.: D3.0

ALL IDEAS, DESIGNS, ARRANGEMENTS, AND PLANS INDICATED OR REPRESENTED BY THIS DRAWING ARE OWNED BY AND THE PROPERTY OF VERDE DESIGN, INC. AND WERE CREATED, EVOLVED, AND DEVELOPED FOR USE ON AND IN CONNECTION WITH THE SPECIFIED PROJECT. NONE OF SUCH IDEAS, DESIGNS, ARRANGEMENTS OR PLANS SHALL BE USED, REPRODUCED, OR PUBLISHED BY ANY METHOD, IN WHOLE OR IN PART, OR DISCLOSED TO ANY PERSON, FIRM, OR CORPORATION FOR ANY PURPOSE WHATSOEVER WITHOUT THE WRITTEN PERMISSION OF VERDE DESIGN, INC.

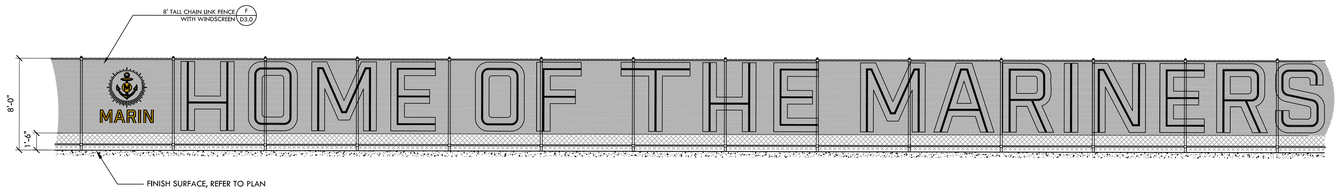

NOTE:

1. SEE GENERAL GATE NOTES ON SHEET D3.0, DETAIL A.

J BEACH VOLLEYBALL WINDSCREEN DESIGN — NTS

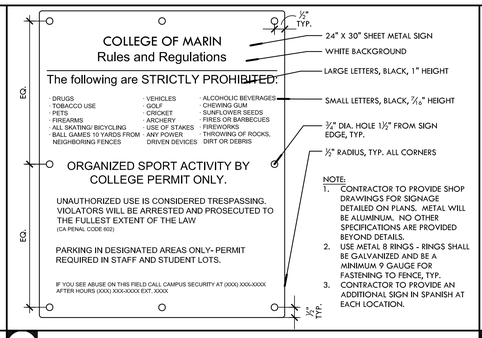

NOTE:

1. CONTRACTOR TO PROVIDE SHOP DRAWINGS FOR SIGNAGE DETAILED ON PLANS. METAL WILL BE ALUMINUM. NO OTHER SPECIFICATIONS ARE PROVIDED BEYOND DETAILS.
2. USE METAL 8 RINGS - RINGS SHALL BE GALVANIZED AND BE A MINIMUM 9 GAUGE FOR FASTENING TO FENCE, TYP.
3. CONTRACTOR TO PROVIDE AN ADDITIONAL SIGN IN SPANISH AT EACH LOCATION.

L SIGN TYPE - 1 — NTS

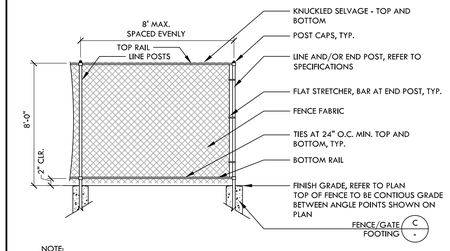

NOTE:

1. SEE GENERAL GATE NOTES ON THIS SHEET, DETAIL A.

I 8' TALL CHAIN LINK FENCE - NO EDGEBAND — NTS

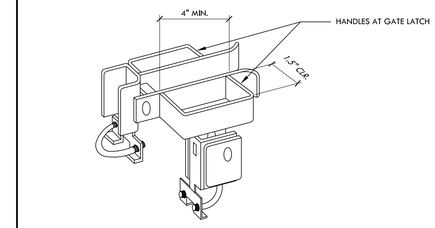

NOTES:

1. FULCRUM GATE LATCH, AVAILABLE FROM THOLL FENCE, INC. (775) 358-8680.
2. LATCH HANDLE MEASURED FROM INSIDE EDGE.
3. WELD HANDLE ON BOTH SIDES, MOUNT LEVER ON GATE.
4. CONTRACTOR TO REFER TO STRUCTURAL DRAWINGS FOR RECEIVING FENCE POST SIZES AND REFER TO SPECIFICATIONS FOR GATE FRAME SIZES. CONTRACTOR TO COORDINATE FABRICATION WITH MANUFACTURER FOR APPROPRIATE GATE LATCH SIZES.

E GATE LATCH - TYPE 1 — NTS

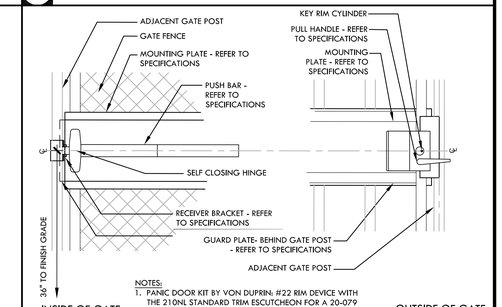

NOTES:

1. PANIC DOOR KIT BY VON DUPRIN: #22 RIM DEVICE WITH THE 210NL STANDARD TRIM ESCUTCHEON FOR A 20-079 626 CYLINDER HOUSING, OR APPROVED EQUAL.
2. INSTALL SECURITY PLATE 16" TALL WITH PANIC BAR.

D ACCESSIBLE PANIC BAR AND PULL HANDLE — NTS

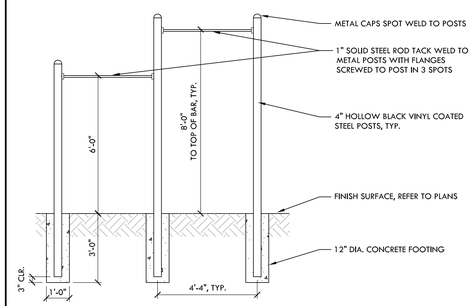

K PULL UP BARS — NTS

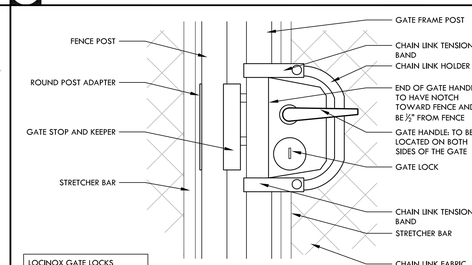

LOCINOX GATE LOCKS FOR CHAIN LINK GATES
HOOVER FENCE CO.
1 800 355 2335
WWW.HOOVERFENCE.COM

NOTE:

1. CONTRACTOR SHALL PROVIDE SHOP DRAWINGS FOR ACCEPTANCE BY DISTRICT'S REPRESENTATIVE PRIOR TO FABRICATION.
2. INSTALL SO THAT HANDLE PIVOT POINT IS 36" ABOVE FINISH GRADE.
3. CONTRACTOR TO COORDINATE WITH DISTRICT ON KEY CYLINDERS TYPE TO MATCH EXISTING DISTRICT LOCKS.

H GATE LATCH - TYPE 2 — NTS

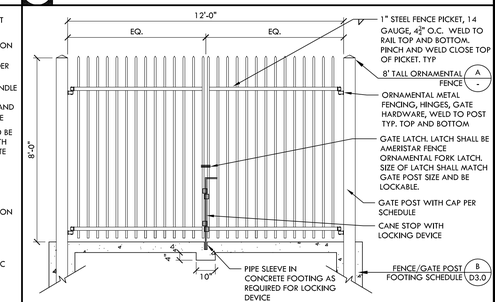

NOTE:
SEE GENERAL GATE AND FENCE NOTES, DETAIL A, SHEET D3.0.

C 8' X 12' ORNAMENTAL DOUBLE SWING GATE — NTS

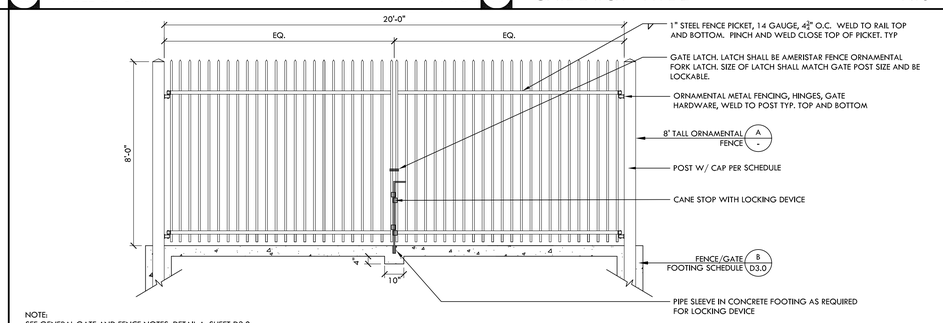

NOTE:
SEE GENERAL GATE AND FENCE NOTES, DETAIL A, SHEET D3.0.

G 8' X 20' ORNAMENTAL DOUBLE SWING GATE — NTS

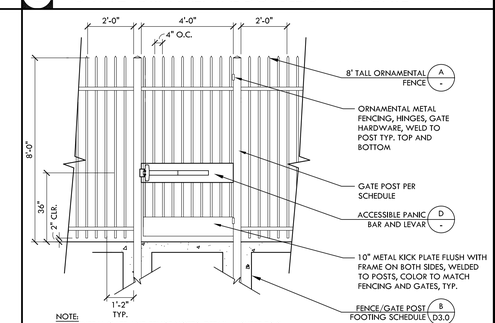

NOTE:
SEE GENERAL GATE AND FENCE NOTES, DETAIL A, SHEET D3.0.

B 8' X 4' ORNAMENTAL SWING GATE — NTS

NOT USED

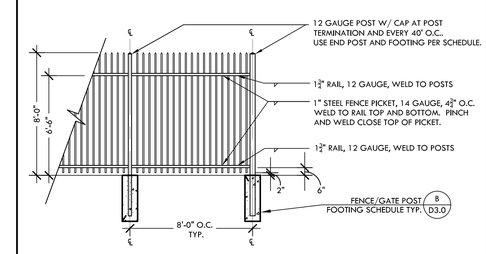

NOTE:

1. SEE GENERAL GATE NOTES SHEET D3.0, DETAIL A.

A 8' ORNAMENTAL FENCE — NTS

ALL IDEAS, DESIGNS, ARRANGEMENTS, AND PLANS INDICATED OR REPRESENTED BY THIS DRAWING ARE OWNED BY AND THE PROPERTY OF VERDE DESIGN, INC. AND WERE CREATED, EVOLVED, AND DEVELOPED FOR USE ON AND IN CONNECTION WITH THE SPECIFIED PROJECT. NONE OF SUCH IDEAS, DESIGNS, ARRANGEMENTS, AND PLANS SHALL BE USED, REPRODUCED, OR PUBLISHED BY ANY METHOD, IN WHOLE OR IN PART, OR DISCLOSED TO ANY PERSON, FIRM, OR CORPORATION FOR ANY PURPOSE WHATSOEVER WITHOUT THE PERMISSION OF VERDE DESIGN, INC.

VERDE DESIGN
LANDSCAPE ARCHITECTURE
CIVIL ENGINEERING
SPORT PLANNING & DESIGN
2455 The Alameda
Santa Clara, CA 95050
tel: 408.985.7200
fax: 408.985.7260
www.VerdeDesigninc.com

STAMP

REGISTERED PROFESSIONAL ENGINEER — DERTIN CORBETT — No. C-56494 — Signature — EXPIRATION DATE June 30, 2019 — STATE OF CALIFORNIA

CONSULTANT

SHEET TITLE
CONSTRUCTION DETAILS

PROJECT NAME
COLLEGE OF MARIN ATHLETIC FACILITIES IMPROVEMENTS

PROJECT ADDRESS
835 COLLEGE AVE.
KENTFIELD, CA
94904

SUBMITTAL	DATE
80% CD SUBMITTAL	06/16/17
100% SUBMITTAL	06/30/17

NO.	REVISIONS	DATE

DRAWN BY	CHECKED BY
KL	DC
DATE ISSUED 06/30/17	SCALE NTS

PROJ. NO. 1702200

SHEET NO. D3.1

ALL IDEAS, DESIGNS, ARRANGEMENTS, AND PLANS INDICATED OR REPRESENTED BY THIS DRAWING ARE OWNED BY AND THE PROPERTY OF VERDE DESIGN, INC. AND WERE CREATED, EVOLVED, AND DEVELOPED FOR USE ON AND IN CONNECTION WITH THE SPECIFIED PROJECT. NONE OF SUCH IDEAS, DESIGNS, ARRANGEMENTS OR PLANS SHALL BE USED, REPRODUCED, OR PUBLISHED BY ANY METHOD, IN WHOLE OR IN PART, OR DISCLOSED TO ANY PERSON, FIRM, OR CORPORATION FOR ANY PURPOSE WHATSOEVER WITHOUT WRITTEN PERMISSION OF VERDE DESIGN, INC.

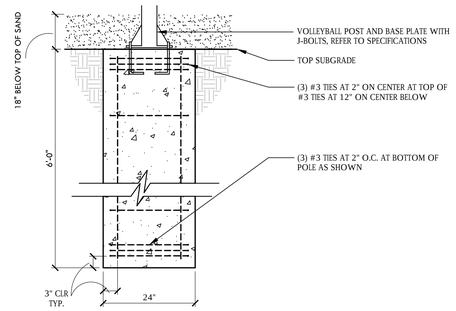

Q

L BEACH VOLLEYBALL NET FOOTING NTS

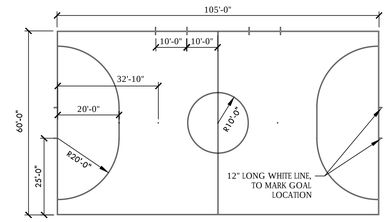

NOTES:
FUTSAL STRIPING SHALL BE INLAID OR TUFTED 3" WIDE WHITE LINES.

I FUTSAL STRIPING (REFERENCE ONLY) NTS

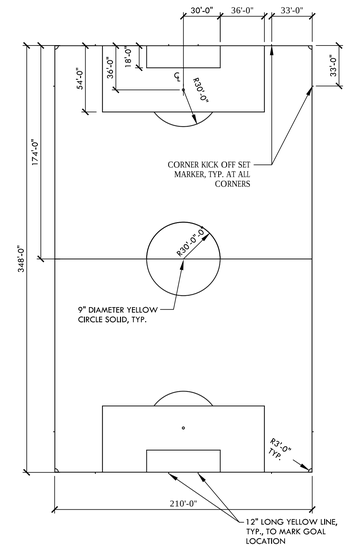

NOTES:
1. SOCCER FIELD STRIPING SHALL BE INLAID OR TUFTED 4" WIDE WHITE LINES. SOCCER STRIPING TO TAKE PRECEDENCE OVER LACROSSE
2. CONTRACTOR TO PROVIDE SHOP DRAWINGS FOR REVIEW AND ACCEPTANCE. ALL FIELD MARKINGS SHALL CONFORM TO CURRENT FIFA GUIDELINES.

D SOCCER FIELD STRIPING (REFERENCE ONLY) NTS

NOT USED

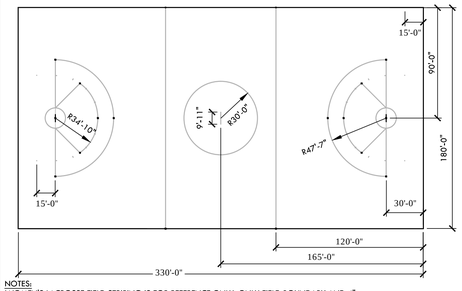

NOTES:
WOMEN'S LACROSSE FIELD STRIPING IS FOR REFERENCE ONLY. ONLY FIELD BOUNDARY AND 4" DIAMETER CIRCLE, DESIGNATED BY ■ SYMBOL, TO BE INLAID WITHIN FIELD. LACROSSE BOUNDARY SHALL BE YELLOW IN COLOR. 4" CIRCLES TO BE GRAY IN COLOR.

H LACROSSE STRIPING - WOMEN'S (REFERENCE ONLY) NTS

P

K

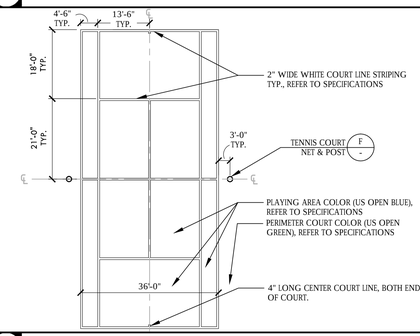

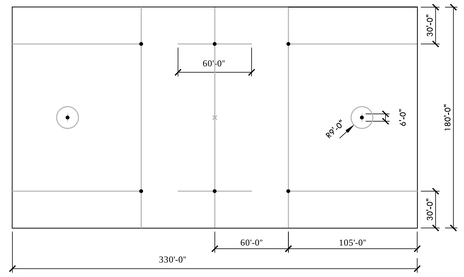

NOTES:
MEN'S LACROSSE FIELD STRIPING IS FOR REFERENCE ONLY. ONLY FIELD BOUNDARY AND 4" DIAMETER CIRCLE, DESIGNATED BY ● SYMBOL, TO BE INLAID WITHIN FIELD. LACROSSE BOUNDARY SHALL BE YELLOW IN COLOR. 4" CIRCLES TO BE GOLD IN COLOR.

G LACROSSE STRIPING - MEN'S (REFERENCE ONLY) NTS

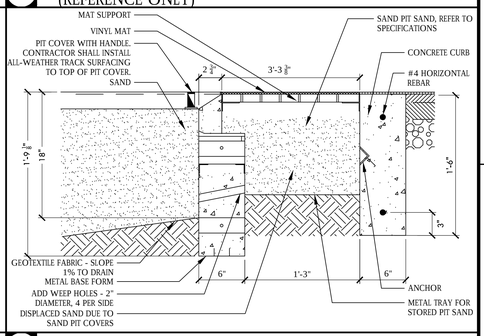

C SAND PIT WITH SAND CATCHERS NTS

O

J TENNIS COURT LAYOUT NTS

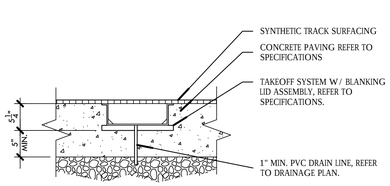

N TAKE-OFF BOARD NTS

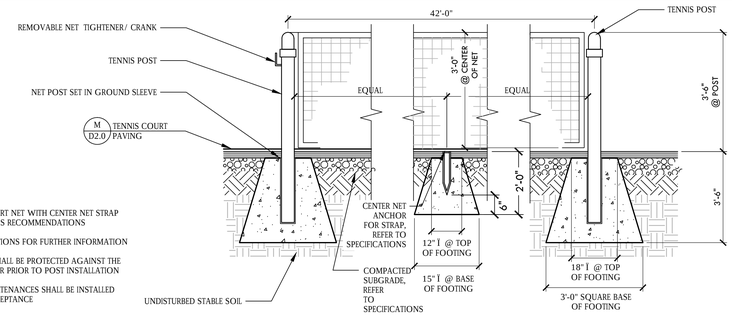

NOTES:
1. INSTALL TENNIS COURT NET WITH CENTER NET STRAP PER MANUFACTURER'S RECOMMENDATIONS
2. REFER TO SPECIFICATIONS FOR FURTHER INFORMATION
3. NET POST SLEEVES SHALL BE PROTECTED AGAINST THE ENTRANCE OF WATER PRIOR TO POST INSTALLATION
4. NETS AND ALL APPURTENANCES SHALL BE INSTALLED PRIOR TO FINAL ACCEPTANCE

F TENNIS COURT NET AND POSTS NTS

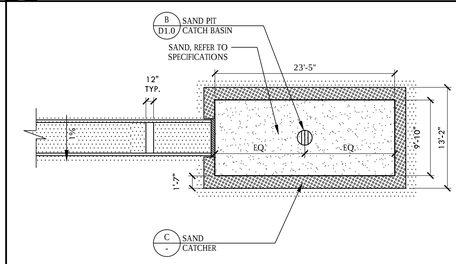

NOTE:
1. REFER TO SPECIFICATION FOR PRODUCT MANUFACTURE AND MODEL NUMBER
2. SAND TO BE LEVEL WITH TOP OF ADJACENT SAND CATCHER SYSTEM
3. THIS DETAIL IS FOR POURED IN PLACE JUMP PIT.

B LONG/TRIPLE JUMP SAND PIT NTS

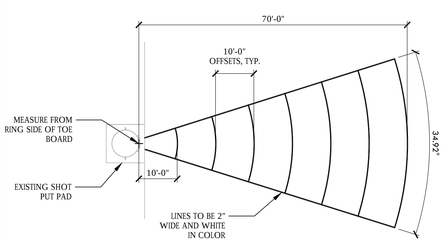

M SHOT PUT STRIPING (REFERENCE ONLY) NTS

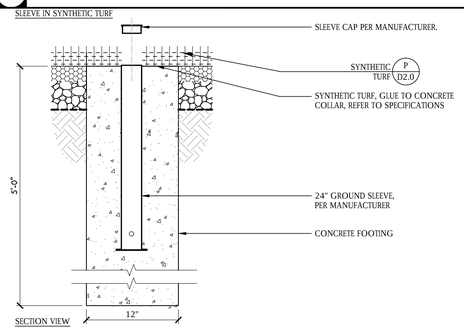

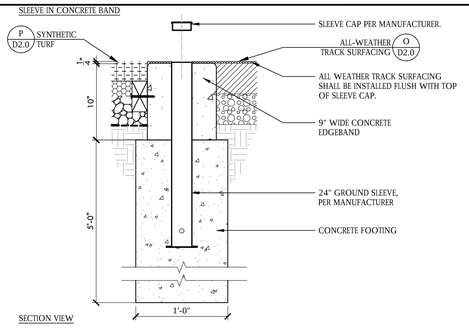

E LACROSSE NETTING SLEEVE NTS

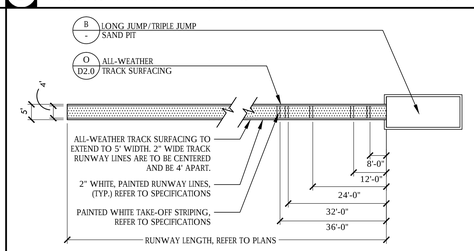

NOTES:
1. DIMENSIONS TO TAKE-OFF LINES ARE MEASURED FROM FRONT FACE OF LANDING PIT EDGE.
2. COLOR OF 32' TRIPLE JUMP TAKE OFF LINE SHALL BE WHITE AND 24' TAKE OFF LINE SHALL BE WHITE.
3. CONTRACTOR SHALL INSTALL TAKE-OFF BOARDS AT 12', 32', AND 36'. REFER TO DETAIL N, THIS SHEET FOR ADDITIONAL INFORMATION.

A LONG / TRIPLE JUMP NTS

VERDE DESIGN
LANDSCAPE ARCHITECTURE
CIVIL ENGINEERING
SPORT PLANNING & DESIGN
2455 The Alameda
Santa Clara, CA 95050
tel: 408.985.7200
fax: 408.985.7260
www.VerdeDesigninc.com

STAMP

REGISTERED PROFESSIONAL ENGINEER
DEVIN CONROY
No. C-56494
Signature
EXPIRATION DATE
June 30, 2019
STATE OF CALIFORNIA

CONSULTANT

SHEET TITLE
CONSTRUCTION DETAILS

PROJECT NAME
COLLEGE OF MARIN ATHLETIC FACILITIES IMPROVEMENTS

PROJECT ADDRESS
835 COLLEGE AVE.
KENTFIELD, CA
94904

SUBMITTAL	DATE
80% CD SUBMITTAL	06/16/17
100% SUBMITTAL	06/30/17

NO.	REVISIONS	DATE

DRAWN BY	CHECKED BY
KL	DC
DATE ISSUED	SCALE
06/30/17	NTS

PROJ. NO.
1702200

SHEET NO.
D4.0

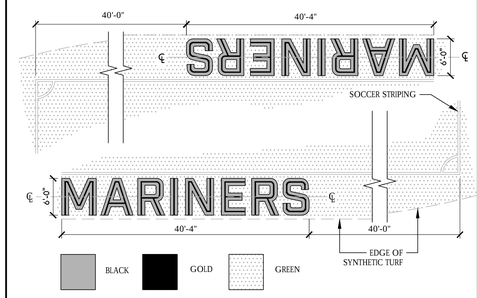

NOTE: DIGITAL IMAGE TO BE PROVIDED TO TURF MFR. FOR FINAL PRODUCTION.

D SOCCER SIDE LINES LETTERING (REFERENCE ONLY) NTS

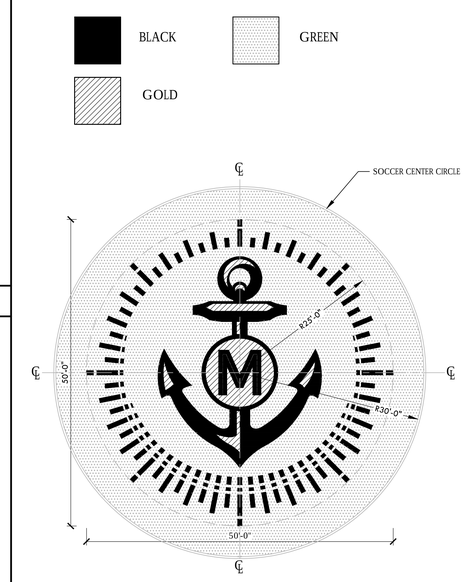

NOTE: DIGITAL IMAGE TO BE PROVIDED TO TURF MFR. FOR FINAL PRODUCTION.

C SOCCER MIDDLE FIELD LOGO (REFERENCE ONLY) NTS

NOT USED

NOT USED

VERDE DESIGN
LANDSCAPE ARCHITECTURE
CIVIL ENGINEERING
SPORT PLANNING & DESIGN
2455 The Alameda
Santa Clara, CA 95050
tel: 408.985.7200
fax: 408.985.7260
www.VerdeDesigninc.com

STAMP

REGISTERED PROFESSIONAL ENGINEER
DERYN CONROY
No. C-56404
Signature
EXPIRATION DATE
June 30, 2018
STATE OF CALIFORNIA

CONSULTANT

SHEET TITLE
CONSTRUCTION DETAILS

PROJECT NAME
COLLEGE OF MARIN ATHLETIC FACILITIES IMPROVEMENTS

PROJECT ADDRESS
835 COLLEGE AVE.
KENTFIELD, CA
94904

SUBMITTAL	DATE
80% CD SUBMITTAL	06/16/17
100% SUBMITTAL	06/30/17

NO.	REVISIONS	DATE

DRAWN BY	CHECKED BY
KL	DC
DATE ISSUED 06/30/17	SCALE NTS

PROJ. NO. 1702200

SHEET NO. D5.1

ALL IDEAS, DESIGNS, ARRANGEMENTS, AND PLANS INDICATED OR REPRESENTED BY THIS DRAWING ARE OWNED BY AND THE PROPERTY OF VERDE DESIGN, INC. AND WERE CREATED, EVOLVED, AND DEVELOPED FOR USE ON AND IN CONNECTION WITH THE SPECIFIED PROJECT. NONE OF SUCH IDEAS, DESIGNS, ARRANGEMENTS OR PLANS SHALL BE USED, REPRODUCED, OR PUBLISHED BY ANY METHOD, IN WHOLE OR IN PART, OR DISCLOSED TO ANY PERSON, FIRM, OR CORPORATION WITHOUT THE WRITTEN PERMISSION OF VERDE DESIGN, INC.

ALL IDEAS, DESIGNS, ARRANGEMENTS, AND PLANS INDICATED OR REPRESENTED BY THIS DRAWING ARE OWNED BY AND THE PROPERTY OF VERDE DESIGN, INC. AND WERE CREATED, EVOLVED, AND DEVELOPED FOR USE ON AND IN CONNECTION WITH THE SPECIFIED PROJECT. NONE OF SUCH IDEAS, DESIGNS, ARRANGEMENTS OR PLANS SHALL BE USED, REPRODUCED, OR PUBLISHED BY ANY METHOD, IN WHOLE OR IN PART, OR DISCLOSED TO ANY PERSON, FIRM, OR CORPORATION FOR ANY PURPOSE WHATSOEVER WITHOUT WRITTEN PERMISSION OF VERDE DESIGN, INC.

S

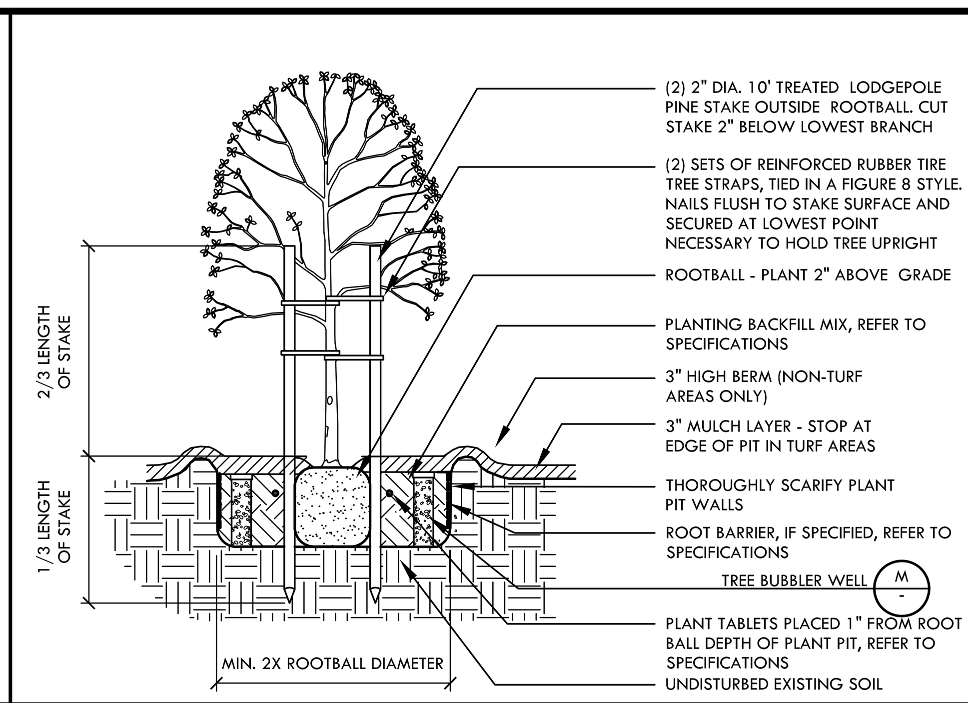

N TREE PLANTING AND BUBBLER NTS

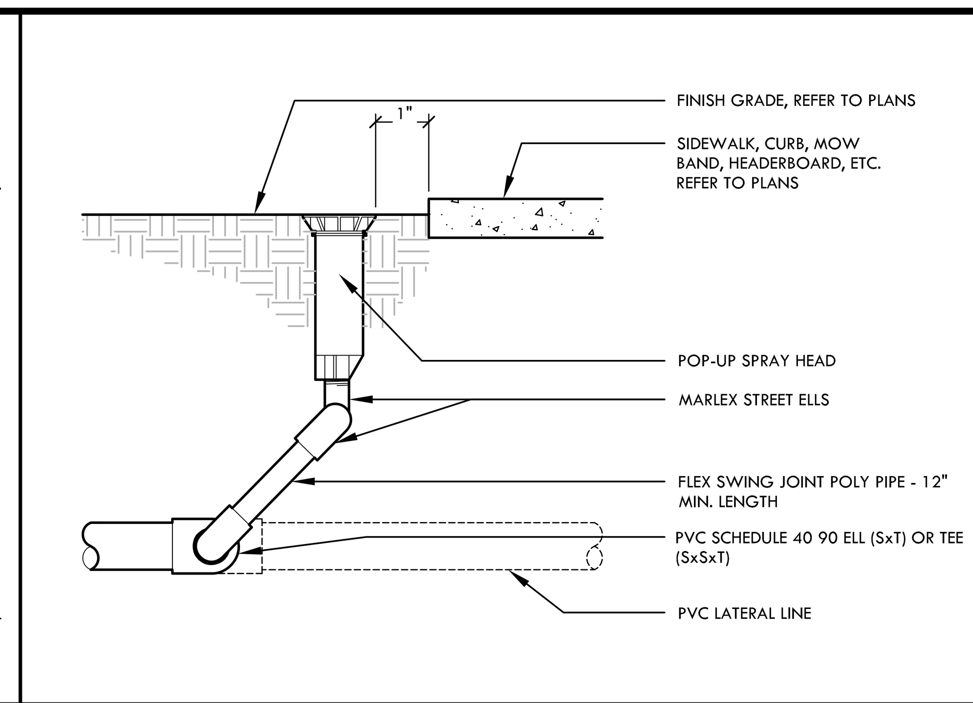

I POP UP AND SWING JOINT NTS

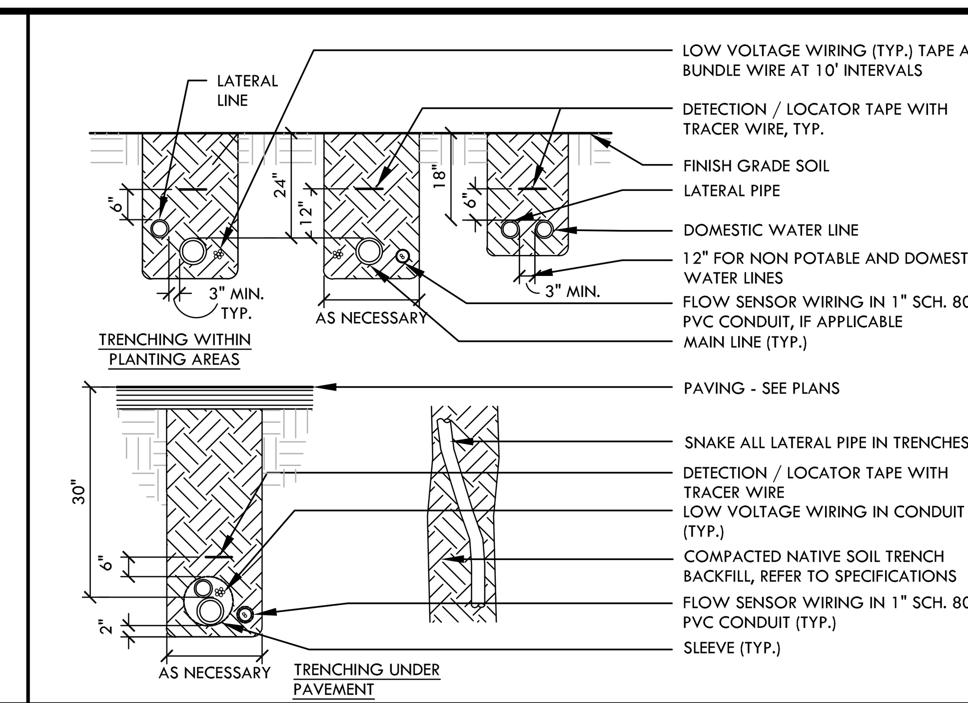

E IRRIGATION PIPE TRENCHING NTS

R

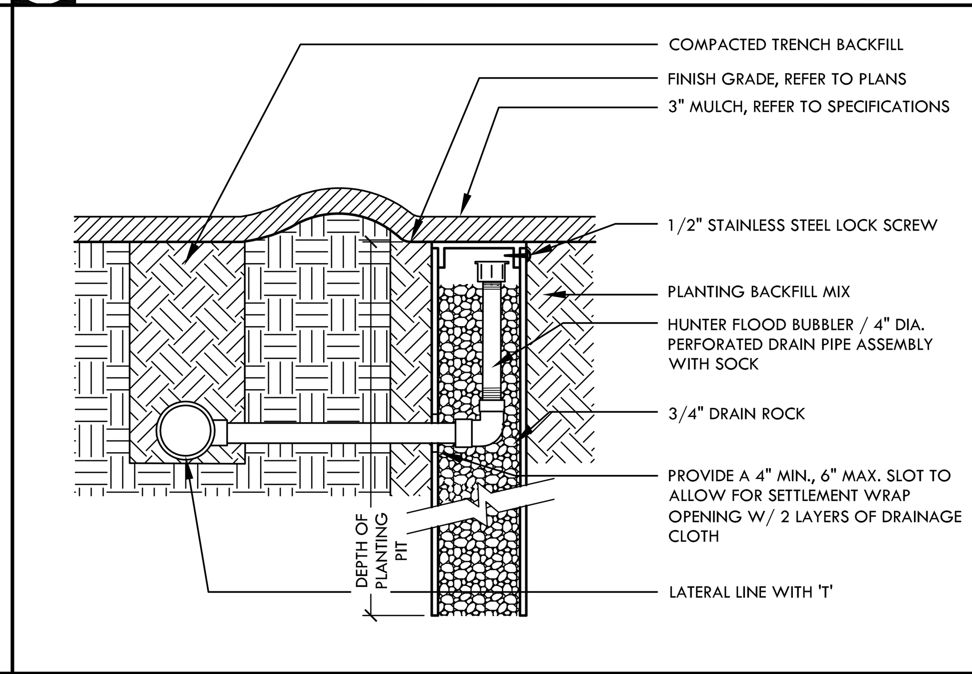

M TREE BUBBLER WELL NTS

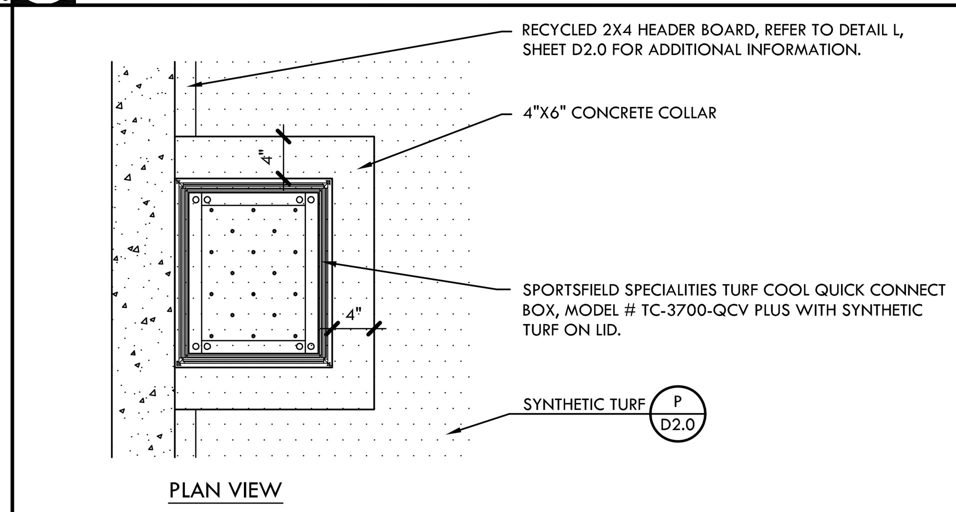

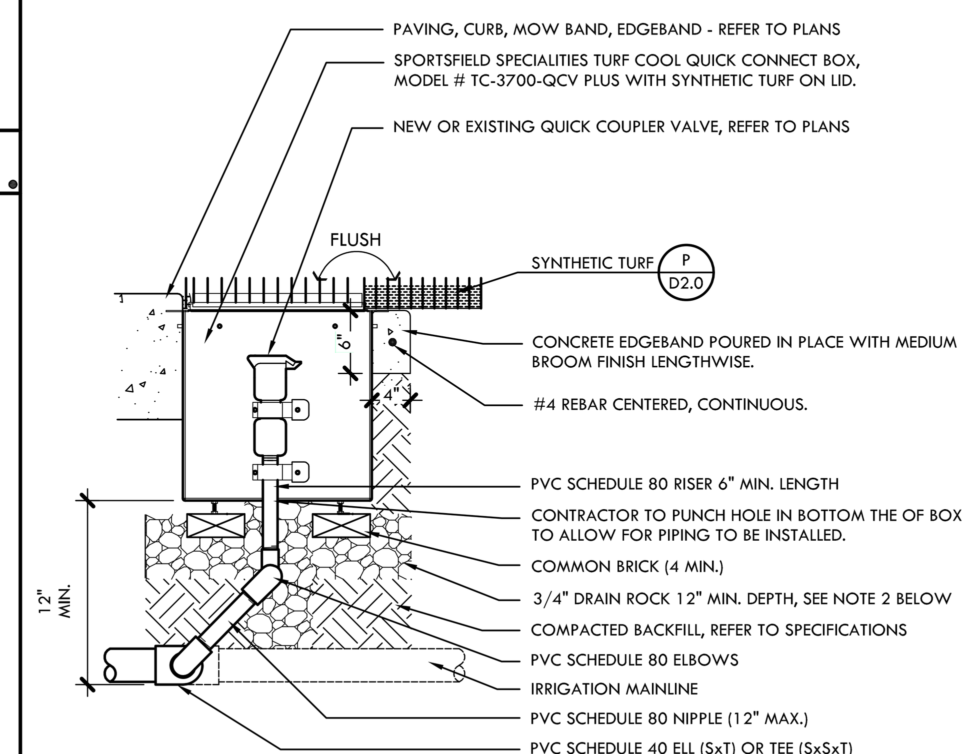

NOTES:
1. VALVE TO HAVE 2" MIN. CLEARANCE FROM LID BOTTOM TO TOP OF VALVE CAP.
2. WHERE QUICK COUPLER IS ADJACENT TO PERFORATED DRAIN TRENCH WITHIN SYNTHETIC TURF, CONTRACTOR TO CONNECT QUICK COUPLER SUBDRAIN ROCK TO SUBDRAIN ROCK WITHIN TRENCH.

H QUICK COUPLER IN SYNTHETIC TURF NTS

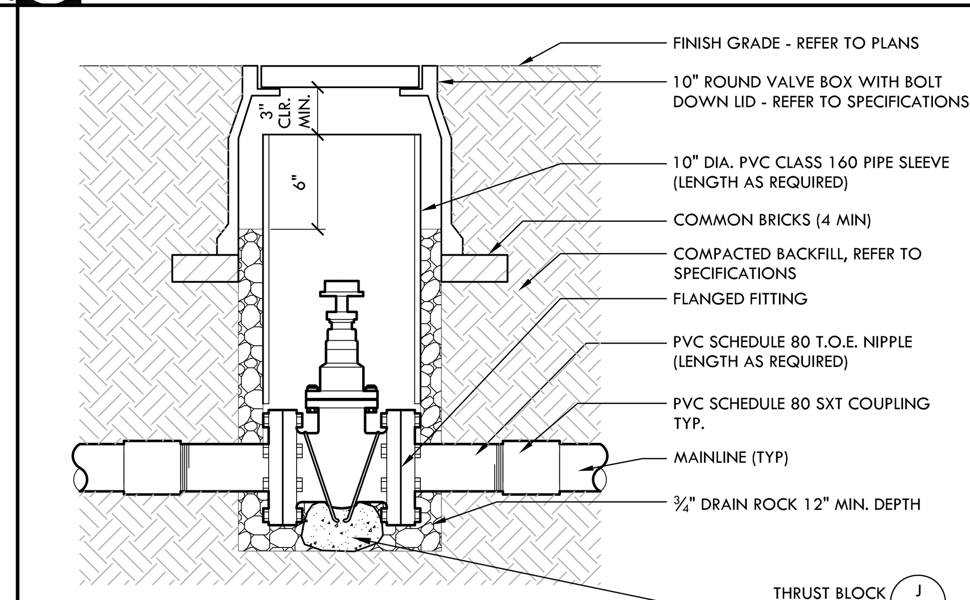

NOTE:
VALVE TO HAVE 3" MIN. CLEARANCE FROM LID BOTTOM TO TOP OF 10" PVC SLEEVE

D GATE VALVE - 2 1/2" AND LARGER NTS

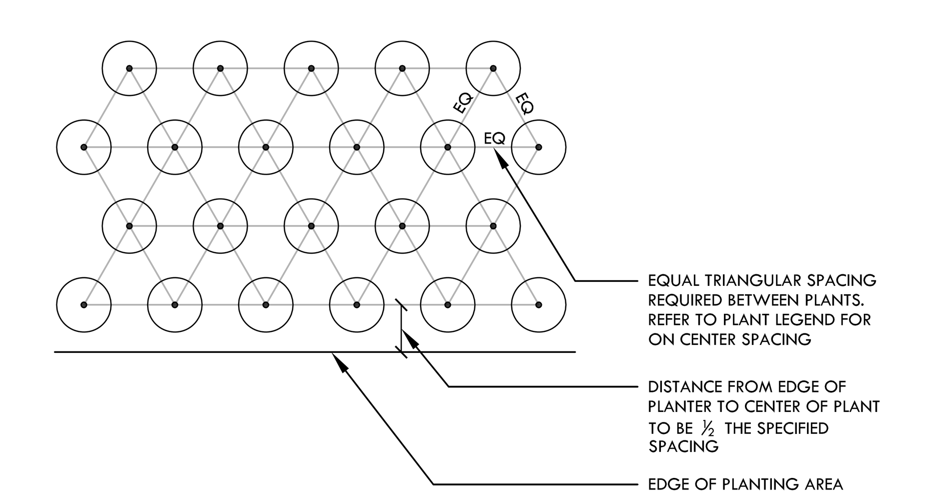

Q TRIANGULAR SPACING DIAGRAM NTS

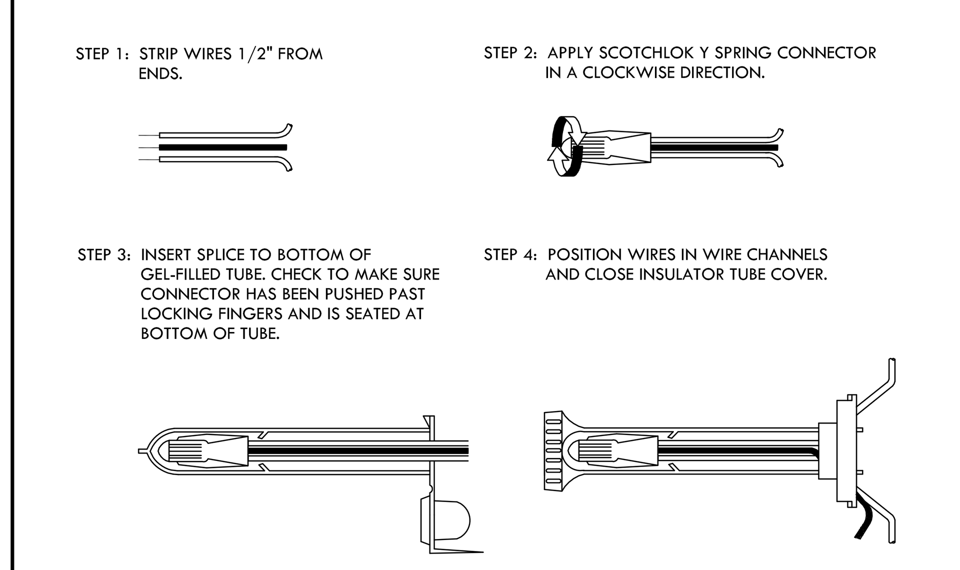

MAXIMUM WIRE SIZES PER CONNECTOR ARE 3 - #14'S OR 2 - #12'S.

L CONTROL WIRE CONNECTION NTS

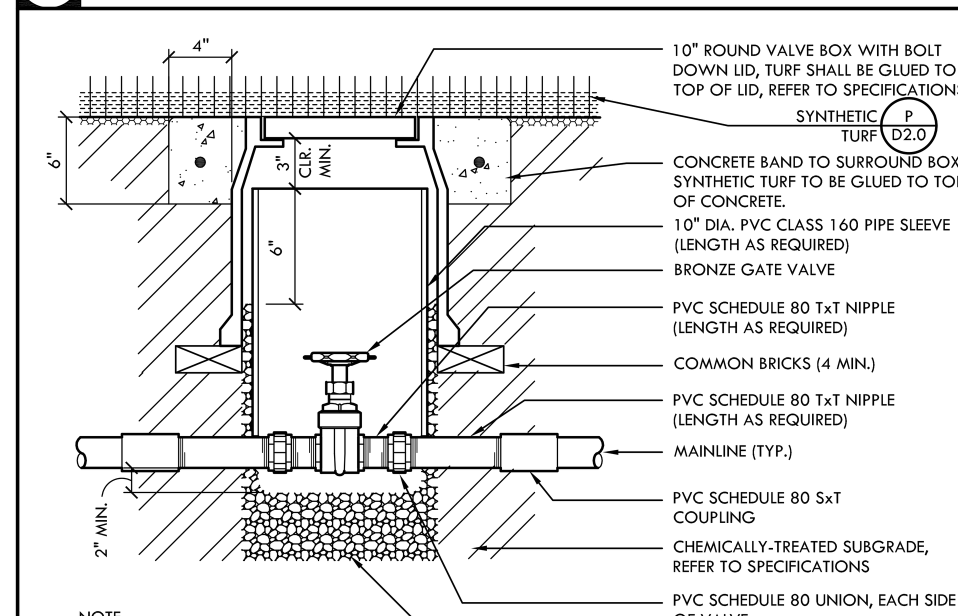

NOTE:
VALVE TO HAVE 3" MIN. CLEARANCE FROM LID BOTTOM TO TOP OF 10" SLEEVE

C GATE VALVE IN SYNTHETIC TURF NTS

NOTE:
FOR SHRUBS INSIDE IRRIGATION COVERAGE ZONES, REFER TO DETAIL P, THIS SHEET. FOR TREES INSIDE IRRIGATION COVERAGE ZONES, REFER TO DETAIL O, THIS SHEET, FOR INFORMATION ON SOIL CONDITIONING ONLY.

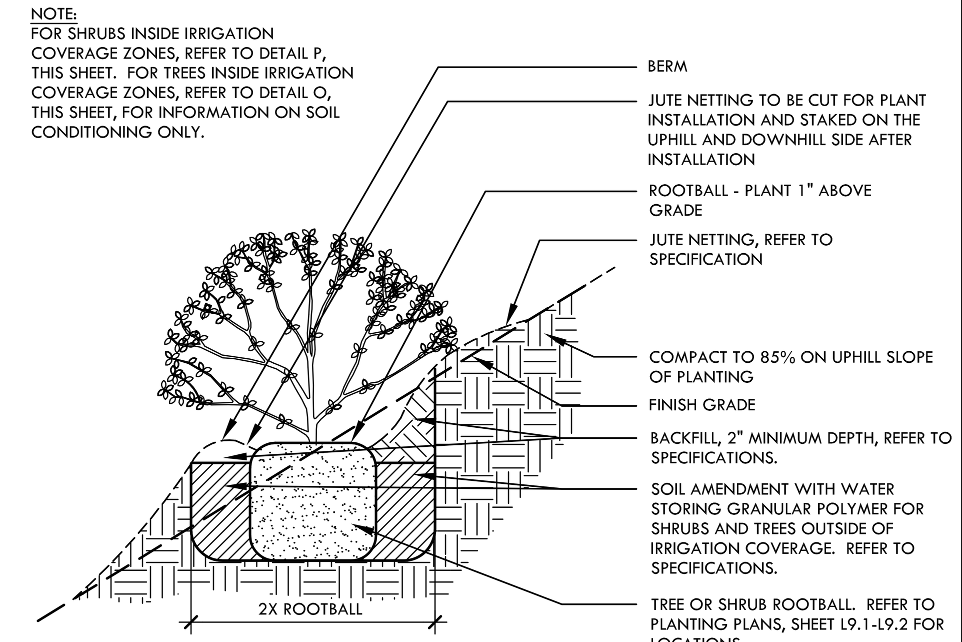

P TREE/SHRUB PLANTING ON SLOPE NTS

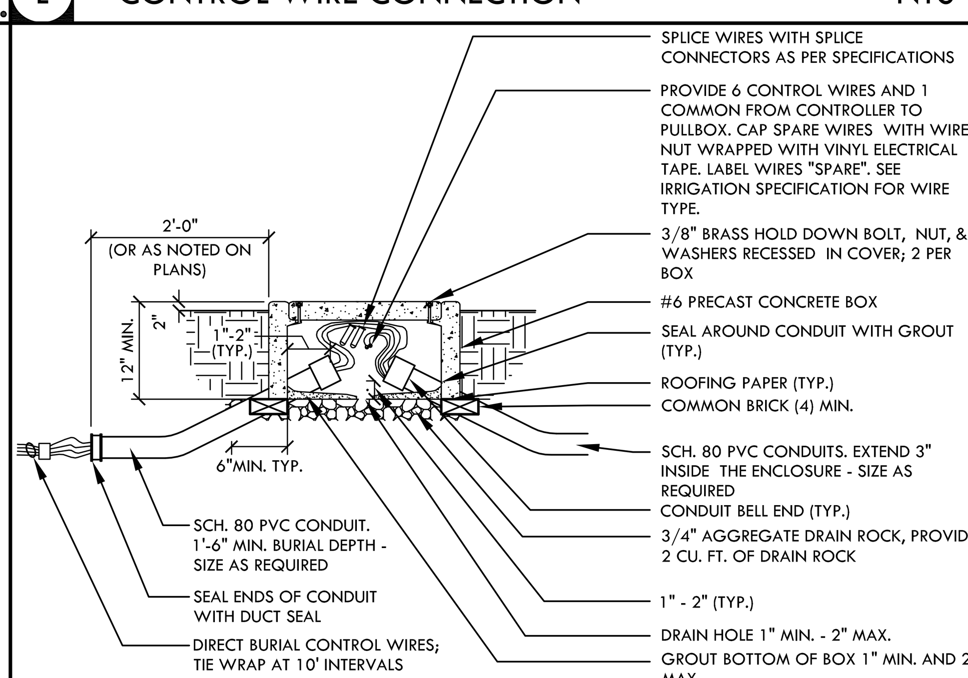

K SPLICE BOX NTS

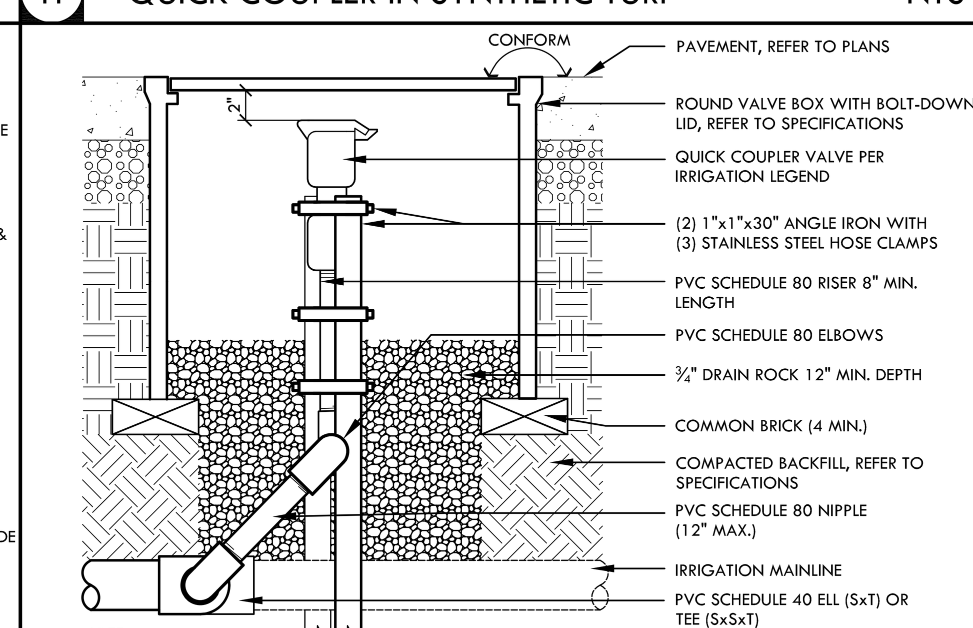

NOTE:
VALVE TO HAVE 2" MIN. CLEARANCE FROM LID BOTTOM TO TOP OF VALVE CAP

G QUICK COUPLER VALVE IN HARDSCAPE NTS

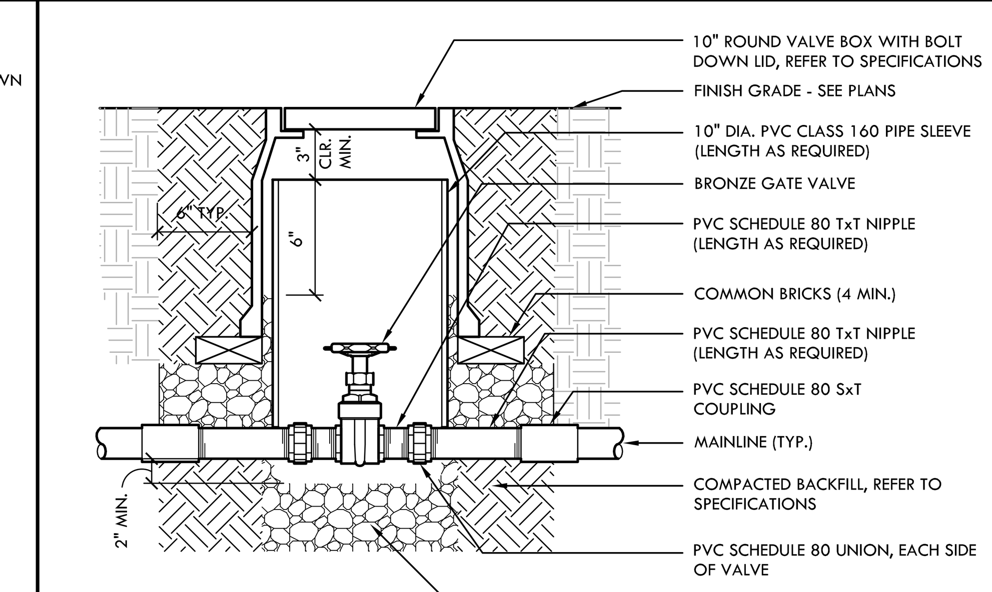

NOTE:
VALVE TO HAVE 3" MIN. CLEARANCE FROM LID BOTTOM TO TOP OF 10" SLEEVE

B GATE VALVE - 2" AND SMALLER IN SIZE NTS

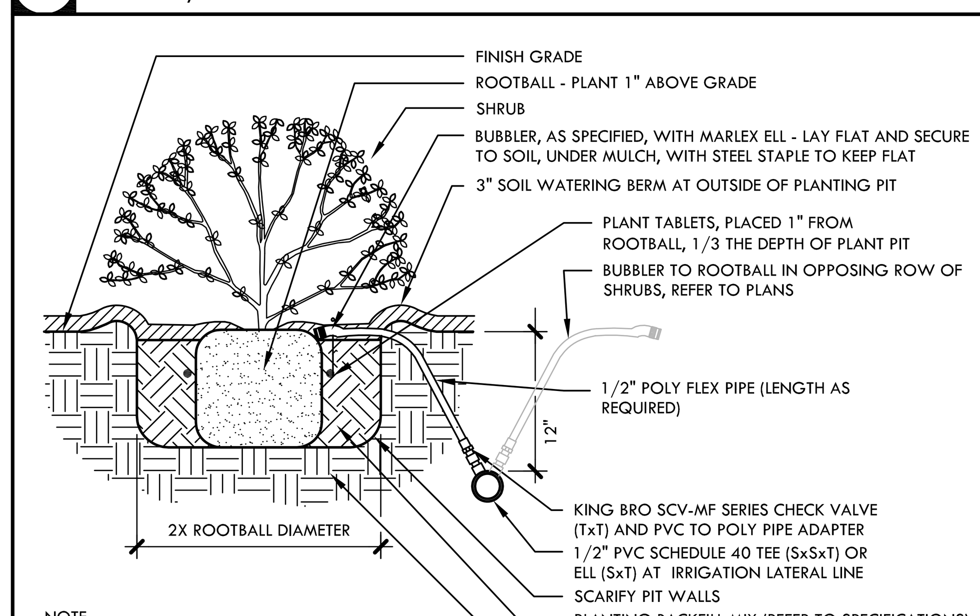

NOTE:
INSTALL BUBBLER ON UP HILL SIDE OF PLANT WHERE APPLICABLE.

O SHRUB PLANTING WITH BUBBLER NTS

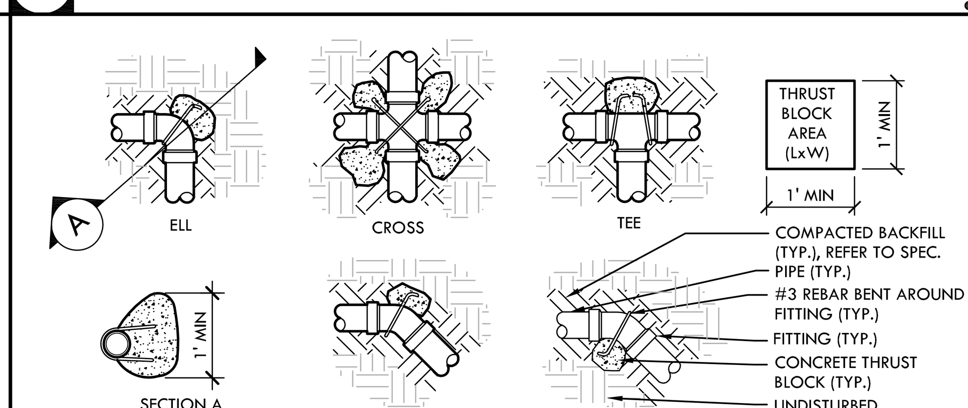

NOTES:
1. SUPPLY LINES 3" DIA. AND LARGER OR GATE VALVES 2½" OR LARGER SHALL RECEIVE CONCRETE THRUST BLOCKS.
2. MIN. THRUST BLOCK AREAS ARE BASE ON A SOIL BEARING CAPACITY OF 3000 LBS/SF.
3. THRUST BLOCK SHALL EXTEND INTO UNDISTURBED SOIL.
4. CONCRETE SHALL NOT COVER FITTING JOINTS.
5. MAIN LINE PIPING 4" AND LARGER SHALL HAVE DUCTILE IRON FITTINGS WITH JOINT RESTRAINTS INSTALLED AT ALL FLOW DIRECTION CHANGES (CONCRETE THRUST BLOCK NOT REQUIRED)

MINIMUM THRUST BLOCK AREA (LxW)

PIPE SIZE	IRRIGATION PIPE: TEE, DEAD END, 90° BEND	IRRIGATION PIPE: 45°,22.5°
3"	1 SF	.5 SF
4"	2 SF	1 SF
6"	2 SF	1.5 SF

J THRUST BLOCK NTS

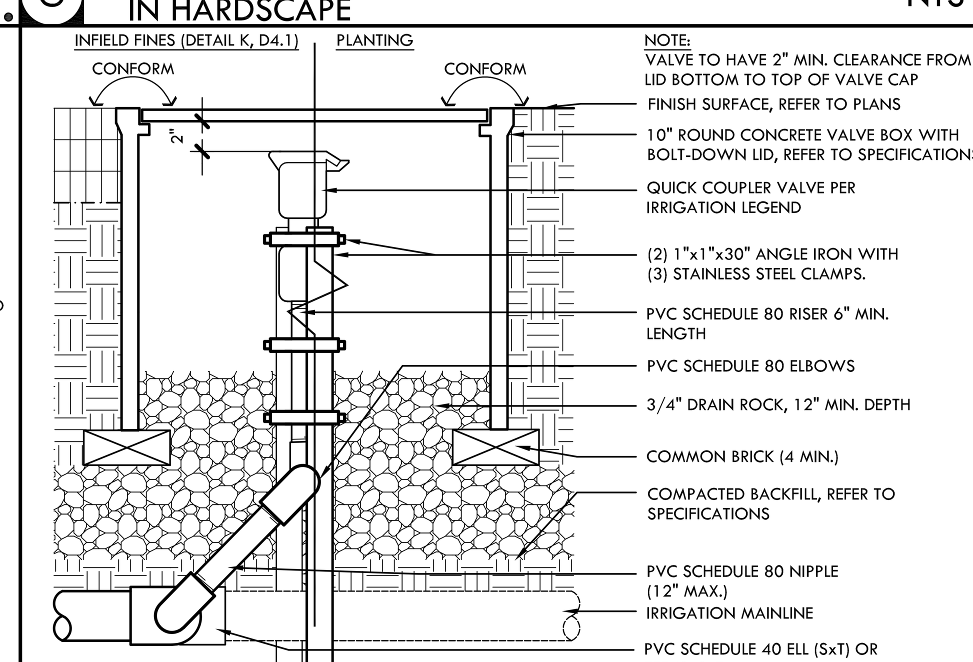

F QUICK COUPLER VALVE IN SOFTSCAPE NTS

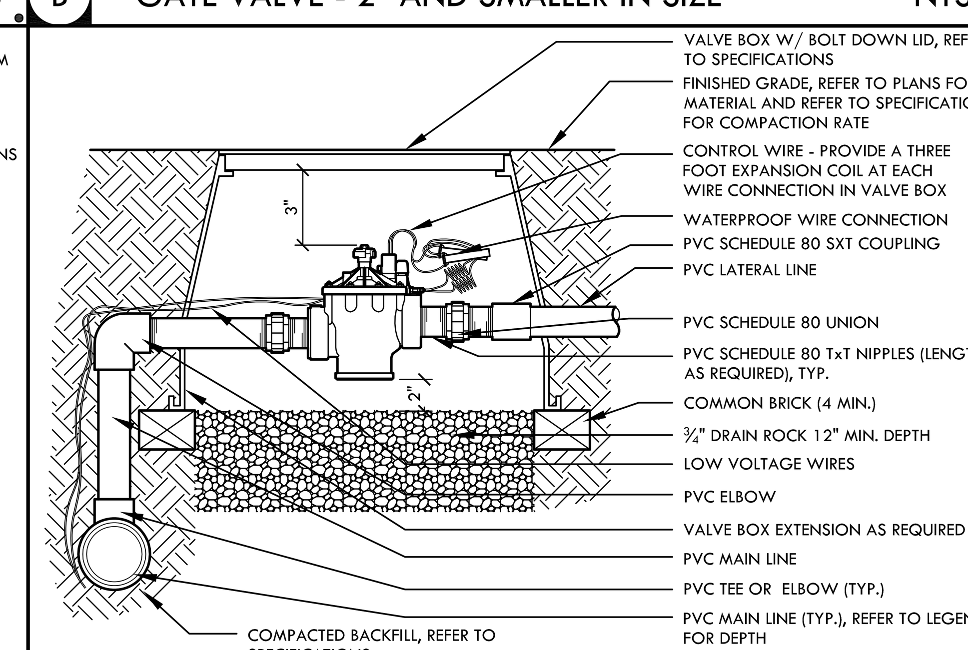

NOTE:
1. VALVE TO HAVE 3" MIN. CLEARANCE FROM LID BOTTOM TO TOP OF VALVE STEM HANDLE.

A REMOTE CONTROL VALVE NTS

VERDE DESIGN
LANDSCAPE ARCHITECTURE
CIVIL ENGINEERING
SPORT PLANNING & DESIGN
2455 The Alameda
Santa Clara, CA 95050
tel: 408.985.7200
fax: 408.985.7260
www.VerdeDesignInc.com

STAMP

REGISTERED PROFESSIONAL ENGINEER
DEVIN CONWAY
No. C-56494
Signature
EXPIRATION DATE: June 30, 2019
STATE OF CALIFORNIA

CONSULTANT

SHEET TITLE
IRRIGATION DETAILS

PROJECT NAME
COLLEGE OF MARIN ATHLETIC FACILITIES IMPROVEMENTS

PROJECT ADDRESS
835 COLLEGE AVE.
KENTFIELD, CA
94904

SUBMITTAL	DATE
80% CD SUBMITTAL	06/16/17
100% SUBMITTAL	06/30/17

NO.	REVISIONS	DATE
△		
△		
△		
△		
△		
△		

DRAWN BY	CHECKED BY
JS	DC
DATE ISSUED: 06/30/17	SCALE: NTS

PROJ. NO. 1702200

SHEET NO. D6.0

IRRIGATION DETAILS

GENERAL NOTES:

1. READ THE COMPLETE SPECIFICATIONS, CONTRACT DOCUMENTS AND COMPLY WITH EACH REQUIREMENTS.
2. THE COMPLETE ELECTRICAL INSTALLATIONS SHALL BE IN ACCORDANCE WITH THE CURRENT EDITION OF THE N.E.C., AND ALL APPLICABLE STATE AND LOCAL CODES ISSUED BY AUTHORITIES HAVING JURISDICTION.
3. THE CONTRACTOR SHALL BE LICENSED BY THE STATE OF CALIFORNIA C-10 AND SHALL COMPLY WITH ALL APPLICABLE CODES AND REGULATIONS. MATERIALS AND EQUIPMENT SHALL BE U.L. LISTED AND LABELED FOR THE APPLICATION.
4. THE CONTRACTOR SHALL OBTAIN AND PAY FOR ALL PERMITS, LICENSES AND INSPECTION FEES REQUIRED BY THIS CONTRACT WORK.
5. PRIOR TO SUBMITTING A BID THE CONTRACTOR SHALL VISIT THE SITE, REVIEW THE EXISTING CONDITIONS AND ALLOW FOR LABOR, MATERIAL AND COORDINATION THAT IS NECESSARY TO PROVIDE A COMPLETE INSTALLATION OF EACH SYSTEM. THE CONTRACTOR SHALL OBTAIN AND BE FAMILIAR WITH ALL OTHER TRADES. THE CONTRACTOR SHALL BE RESPONSIBLE FOR ALL ELECTRICAL WORK NOTED AND CALLED OUT ON ALL CONTRACT DOCUMENTS. THE CONTRACTOR SHALL BE RESPONSIBLE FOR COORDINATION BETWEEN OTHER TRADES ON PROJECT.
6. THE CONTRACTOR SHALL BE RESPONSIBLE FOR THE SAFETY OF PERSONS AND PROPERTY AND SHALL PROVIDE INSURANCE COVERAGE AS NECESSARY FOR LIABILITY, PERSONAL, PROPERTY DAMAGE, TO FULLY PROTECT THE OWNER, ARCHITECT AND ENGINEER FROM ANY AND ALL CLAIMS RESULTING FROM THIS WORK.
7. THE CONTRACTOR SHALL MAINTAIN RECORD DRAWINGS AT THE PROJECT SITE INDICATING ALL MODIFICATIONS TO ELECTRICAL SYSTEMS. THE CONTRACTOR SHALL AT THE CONCLUSION OF THE PROJECT PROVIDE ACCURATE "AS-BUILT" DRAWINGS. "AS-BUILT" DRAWINGS SHALL SHOW ACTUAL CHANGES TO ORIGINAL ELECTRICAL DRAWING, SHOW LOCATIONS OF PULLBOXES, CONDUIT RUNS AND WIRING CHANGES.
8. ALL MATERIALS PROVIDED TO THE PROJECT SHALL BE UL OR CSA LISTED AND SHALL BE NEW. THE CONTRACTOR SHALL BE RESPONSIBLE TO PROVIDE AND INSTALL ALL INCIDENTAL MATERIALS REQUIRED FOR A COMPLETE INSTALLATION.
9. THE CONTRACTOR SHALL PROVIDE ALL REQUIRED "CUTTING, PATCHING, EXCAVATION, BACKFILL AND REPAIRS" NECESSARY TO RESTORE DAMAGED SURFACES TO EQUAL OR BETTER THAN ORIGINAL CONDITIONS EXISTING AT START OF WORK. THE CONTRACTOR SHALL CONTACT "UNDERGROUND SERVICES ALERT" FOR LOCATION OF EXISTING UTILITIES PRIOR TO COMMENCEMENT OF UNDERGROUND WORK.
10. THE CONTRACTOR SHALL BE RESPONSIBLE FOR PAINTING ALL EXPOSED CONDUITS AND ELECTRICAL EQUIPMENT. REFER TO ARCHITECTS PAINTING SECTION FOR REQUIREMENTS.
11. ALL ELECTRICAL EQUIPMENT INSTALLED OUTDOORS SHALL BE WEATHERPROOF. EXTERIOR CONDUITS RUN INTO BUILDINGS SHALL BE INSTALLED WITH FLASHING, CAULKED AND SEALED. CONDUITS FOR EXTERIOR ELECTRICAL DEVICES SHALL BE RUN INSIDE BUILDING UNLESS OTHERWISE NOTED ON DRAWINGS. ALL EXTERIOR CONDUITS SHALL BE "RSG" UNLESS OTHERWISE NOTED ON DRAWINGS.
12. ALL CONDUITS UNLESS OTHERWISE NOTED ON DRAWINGS SHALL HAVE AS A MINIMUM: TWO (2) #12'S WITH ONE (1) #12 GROUND. "TICK" MARKS SHOWN ON CIRCUITRY ARE FOR "ROUGH" ESTIMATING ONLY. THE CONTRACTOR SHALL BE RESPONSIBLE FOR ALL WIRES AND WIRE SIZES REQUIRED BY LATEST CODE.
13. COORDINATE ALL CONDUIT RUNS, ELECTRICAL EQUIPMENT AND PANELS WITH ALL OTHER WORK TO AVOID CONFLICTS.
14. ELECTRICAL EQUIPMENT SHOWN ON THIS DRAWING HAS BEEN SELECTED BASED ON DIMENSIONS TO FIT THE SPACE, THE CONTRACTOR SHALL VERIFY ALL EQUIPMENT DIMENSIONS PRIOR TO ORDERING OF THE EQUIPMENT.
15. CONTRACTOR SHALL REVIEW EQUIPMENT REQUIREMENTS OF OTHER TRADES AND PROVIDE POWER CIRCUITS AND CONNECTIONS TO ELECTRICALLY OPERATED EQUIPMENT.
16. CONTRACTOR SHALL DETERMINE EXACT LOCATION OF UNDERGROUND POWER AND TELEPHONE SERVICES FROM SERVING UTILITIES. FIELD ADJUSTMENTS MAY BE REQUIRED IN INDIVIDUAL SERVICE LOCATIONS.
17. THE CONTRACTOR SHALL CONTACT "UNDERGROUND SERVICES ALERT" FOR LOCATION OF EXISTING UTILITIES PRIOR TO COMMENCEMENT OF UNDERGROUND WORK.
18. NEW DUCT ROUTES ARE APPROXIMATE ONLY AND MAY BE ADJUSTED IN THE FIELD TO CLEAR OTHER UNDERGROUND UTILITIES. PROVIDE AS-BUILT DRAWINGS TO INDICATE ACTUAL LOCATION OF CONDUIT ROUTING.
19. EFFECTIVELY BOND ELECTRICAL CABINETS. ENCLOSURES AND CONDUIT RACEWAYS TO CODE APPROVED GROUND AS PART OF THE CONTINUOUS GROUNDING SYSTEM.
20. FROM ALL NEW PANELS; THE CONTRACTOR SHALL STUB UP INTO ACCESSIBLE CEILING SPACE A MINIMUM OF FOUR (4) 3/4" CONDUITS FOR FUTURE USE.
21. UTILITY SERVICE WORK SHALL BE IN ACCORDANCE WITH THE SERVING UTILITY COMPANY'S RULES, REGULATIONS AND STANDARDS, AND SHALL BE VERIFIED WITH UTILITY COMPANY'S ENGINEERING DRAWINGS AND FIELD SUPERVISOR PRIOR TO COMMENCEMENT OF WORK. THE CONTRACTOR SHALL DETERMINE EXACT LOCATION OF UNDERGROUND POWER, CATV AND TELEPHONE SERVICES FROM SERVING UTILITIES. FIELD ADJUSTMENTS MAY BE REQUIRED IN INDIVIDUAL SERVICE LOCATIONS. THE CONTRACTOR SHALL REMAIN IN CONTACT WITH UTILITY COMPANY ENGINEERING DEPARTMENTS THROUGHOUT PROJECT TO INSURE COORDINATION AND SCHEDULING OF WORK.
22. THE CONTRACTOR SHALL PROVIDE IN EVERY CONDUIT A DRAW STRING FOR USE IN FUTURE CONSTRUCTION. STRING SHALL BE NYLON PULLSTRING ROPE/STRING.
23. POWER FEEDERS MAY NOT BE SHOWN ON THE DRAWINGS, REFER TO THE SINGLE LINE DIAGRAM FOR CONDUIT AND FEEDER INFORMATION. ALL DRAWINGS ARE DIAGRAMMATIC INDICATING LOCATION OR POSITION OF EQUIPMENT. FIELD VERIFY CONDITIONS PRIOR TO INSTALLATION OF ANY WORK.
24. MANUFACTURER'S RECOMMENDATIONS FOR CONDUCTOR SIZING, CIRCUIT BREAKER OR FUSE PROTECTION OF ELECTRICALLY OPERATED EQUIPMENT MAY DIFFER FROM THOSE INDICATED ON DRAWINGS. CONTRACTOR SHALL CONFIRM RATINGS PRIOR TO ORDERING EQUIPMENT. PROVIDE ELECTRICAL PROTECTION TO EQUIPMENT IN ACCORDANCE TO MANUFACTURER'S SPECIFICATIONS AND PER NATIONAL ELECTRICAL CODE REQUIREMENTS.
25. PROVIDE SEISMIC BRACING FOR ALL PENDANT LIGHT FIXTURES, FREESTANDING ELECTRICAL DISTRIBUTION EQUIPMENT, MOTOR CONTROL CENTERS ETC; AND CONDUIT RACKS PER SEISMIC CRITERIA 2013 CBC REQUIREMENTS INCLUDING ENGINEERED LOAD CALCULATIONS COMPLETE WITH SWAY BRACING CRITERIA.
26. DO NOT SUBSTITUTE SPECIFIED MATERIAL OR EQUIPMENT WITHOUT FIRST OBTAINING APPROVAL FROM THE OWNER OR HIS REPRESENTATIVE.
27. ALL SPACES ON PANELS OR SWITCHBOARDS SHALL BE COMPLETE WITH HARDWARES AND BUSSING FOR FUTURE BREAKER OR SWITCH.
28. ALL ELECTRICAL WORK SHALL COMPLY WITH THE 2014 NATIONAL ELECTRICAL CODE AS AMENDED BY THE 2013 CALIFORNIA ELECTRICAL CODE.
29. CONTRACTOR SHALL INCLUDE IN HIS/HER BID PROFESSIONAL UNDERGROUND CONDUIT LOCATOR TO INVESTIGATE (E) UNDERGROUND ELECTRICAL AND LOW VOLTAGE UTILITIES IN ORDER TO AVOID DAMAGE TO (E) UTILITIES TO REMAIN. IF (E) UTILITIES TO REMAIN ARE IN CONFLICT WITH (N) TRENCH, CONTRACTOR TO PROVIDE ADDITIONAL 2FT DEEP TRENCH TO FACILITATE NEW WORK.

DRAWING INDEX

SHEET NO.	SHEET TITLE
E0.1	GENERAL NOTES, SYMBOL LIST, ABBREVIATIONS AND FIXTURE SCHEDULE
E1.0	ELECTRICAL SITE PLAN - DEMOLITION
E1.1	ELECTRICAL NEW SITE PLAN
E2.2	ELECTRICAL FLOOR PLAN - PARKING/ ENTRY/ VOLLEYBALL/FUTSAL
E2.3	ELECTRICAL FLOOR PLAN - SOCCER/ LACROSSE AND TENNIS COURT
E4.1	SINGLE LINE DIAGRAM
E5.1	ELECTRICAL DETAILS
E5.2	ELECTRICAL DETAILS

SYMBOL LIST:

Symbol	Description
1 / E1.1	PLAN, DETAIL OR SECTION DESIGNATION.
201	ROOM NUMBER.
1	SHEET REFERENCE SYMBOL - SEE ASSOCIATED NOTE ON SAME SHEET.
3	FEEDER SCHEDULE SYMBOL.
CH / 1	MECHANICAL EQUIPMENT TAG.
A	INDICATES FIXTURE TYPE

WIRING & CONDUIT RUN SYMBOLS

CONDUIT - CONCEALED IN WALLS OR CEILING.

CONDUIT - EXPOSED.

CONDUIT - IN OR BELOW FLOOR: 3/4"MIN.

(#10, G) CONDUIT - HOME RUN TO PANEL, TERMINAL CABINET, ETC. RUNS MARKED WITH CROSSHATCHES INDICATE NUMBER OF #12 AWG WIRES. CROSSHATCH WITH SUBSCRIPT "G" INDICATES GREEN GROUND WIRE. SIZE CONDUIT ACCORDING TO SPECIFICATIONS AND APPLICABLE CODE. CROSSHATCHES WITH "#10" INDICATES WIRE SIZE OTHER THAN #12'S.

FLEX CONDUIT WITH CONNECTION.

CONDUIT - STUB UP.

CONDUIT - STUB DOWN.

CONDUIT EMERGENCY SYSTEM.

CAPPED CONDUIT.

CONDUIT CONTINUATION.

POWER DISTRIBUTION SINGLE LINE SYMBOLS

CIRCUIT BREAKER.

"SMUD" METER W/ CURRENT TRANSFORMER.

TRANSFORMER.

LUMINAIRE SYMBOLS

LUMINAIRE - SEE SCHEDULE.

LUMINAIRE - SEE SCHEDULE.

LUMINAIRE - SEE SCHEDULE.

LUMINAIRE - SEE SCHEDULE.

POLE MOUNTED LUMINAIRE - SEE SCHEDULE.

POLE MOUNTED LUMINAIRE - SEE SCHEDULE.

LUMINAIRE - SEE SCHEDULE.

LUMINAIRE - SEE SCHEDULE.

LUMINAIRE WALL MOUNTED-SEE SCHEDULE.

EMERGENCY LUMINAIRE - PROVIDE EMERGENCY BATTERY BALLAST

(EM) EMERGENCY LUMINAIRE - PROVIDE EMERGENCY BATTERY BALLAST

EMERGENCY LUMINAIRE - PROVIDE EMERGENCY BATTERY BALLAST

EMERGENCY LUMINAIRE - PROVIDE EMERGENCY BATTERY BALLAST

EMERGENCY LUMINAIRE WALL MOUNTED- PROVIDE EM. BATTERY BALLAST

EXIT LIGHT SINGLE FACE - SEE SCHEDULE.

EXIT LIGHT SINGLE FACE (WITH ARROW)- SEE SCHEDULE.

EXIT LIGHT (DOUBLE FACED WITH ARROW)- SEE SCHEDULE.

EMERGENCY BATTERY PACK EXIT LIGHT INSTALL AS DIRECTED.

TYPICAL LUMINAIRE NOMENCLATURE

3a ——— INDICATES SWITCHING DESIGNATION

└ INDICATES CIRCUIT NUMBER

SWITCH SYMBOLS

Symbol	Description
$	SINGLE POLE SWITCH, + 48" AFF UON.
$a	SINGLE POLE SWITCH, + 48" AFF UON, a = CIRCUIT CONTROLLED.
$3	THREE WAY SWITCH + 48" AFF UON.
$4	FOUR WAY SWITCH + 48" AFF UON.
	MOTOR RATED SWITCH
OS	OCCUPANCY SENSOR

RECEPTACLE SYMBOLS

CONVENIENCE RECEPTACLE - DUPLEX AT + 18" AFF UON.

GFCI CONVENIENCE RECEPTACLE - DUPLEX.

RECEPTACLE DOUBLE DUPLEX AT + 18" AFF UON.

SINGLE RECEPTACLE - NEMA 5-20R UON, AT + 18" AFF UON.

SINGLE RECEPTACLE - NEMA L21 - 208 VOLT, THREE PHASE, 5 WIRE, AT + 18" AFF UON.

FLOOR BOX WITH CONVENIENCE RECEPTACLE, TELEPHONE AND DATA OUTLET.

FLUSH FLOOR BOX WITH SINGLE CONVENIENCE RECEPTACLE.

WIRE RACEWAY, INSTALL AT + 36" AFF UON.

POWER DISTRIBUTION SYMBOLS

Symbol	Description
	PANELBOARD - SURFACE OR FLUSH MOUNTED.
LCP	LIGHTING CONTROL CABINET.
EM	EMERGENCY POWER INVERTER.
J	JUNCTION BOX - CEILING OR WALL MOUNTED, SIZE TO CODE, TAPE AND TAG WIRES. PROVIDE FLEX AND/OR RECEPTACLE AS REQUIRED TO CONNECT EQUIPMENT.
	DISTRIBUTION PANEL
M	MOTOR
30	COMBINATION MAGNETIC STARTER FUSED DISCONNECT SWITCH. RATING AS INDICATED.
60	UNFUSED DISCONNECT SWITCH - RATING AS INDICATED.
100	FUSED DISCONNECT SWITCH - SIZE FUSES PER MOTOR MANUFACTURER'S RECOMMENDATIONS. RATING AS INDICATED.
II	MAGNETIC STARTER - NEMA SIZE INDICATED.
T	TRANSFORMER - SEE SINGLE LINE FOR SIZE.
	GROUND ROD.

ABBREVIATIONS:

A	AMPERE
ABV	ABOVE
AF	AMP FRAME OR AMP FUSE
AFF	ABOVE FINISHED FLOOR
ARCH	ARCHITECTURAL
AS	AMP SWITCH
AT	AMP TRIP
ATS	AUTOMATIC TRANSFER SWITCH
BKR	BREAKER
BLDG	BUILDING
C	CONDUIT
CATV	CABLE TELEVISION
CB	CIRCUIT BREAKER
CD	CANDELAS
CKT	CIRCUIT
CL	CENTER LINE
CLG	CEILING
CO	CONDUIT ONLY
CTR	CENTER
(D)	DEMOLISH
DET	DETAIL
DIM	DIMENSION
DISTR	DISTRIBUTION
DWG	DRAWING
(E)	EXISTING
EM	EMERGENCY
EQPT	EQUIPMENT
FA	FIRE ALARM
FACP	FIRE ALARM CONTROL PANEL
(F)	FUTURE
FIN	FINISH
FL	FLOOR
G , GND	GROUND
HGT	HEIGHT
HP	HORSEPOWER
IC	INTERCOM
IDF	INTERMEDIATE DISTRIBUTION FRAME
JB	JUNCTION BOX
KAIC	KILOAMPERE INTERRUPTING CAPACITY
KV	KILOVOLT
KVA	KILOVOLT AMPERES
KW	KILOWATT
LTG	LIGHTING
MCM	THOUSAND CIRCULAR MILS
MDF	MAIN DISTRIBUTION FRAME
MECH	MECHANICAL
MH	MANHOLE
MTD	MOUNTED
MTG	MOUNTING
(N)	NEW
NC	NORMALLY CLOSED
NIC	NOT IN CONTRACT
NIEC	NOT IN ELECTRICAL CONTRACT
NO	NUMBER/ NORMALLY OPEN
NTS	NOT TO SCALE
O.C.	ON CENTER
P	POLE CIRCUIT BREAKER
PA	PUBLIC ADDRESS
PB	PULL BOX
PF	POWER FACTOR
PH	PHASE
PNL	PANEL
(R)	EXISTING TO BE RELOCATED
REQD	REQUIRED
REQT	REQUIREMENT(S)
RM	ROOM
RSC	RIGID STEEL CONDUIT
SHT	SHEET
SW	SWITCH
SWBD	SWITCHBOARD
TC	TERMINAL CABINET
TEL	TELEPHONE
TYP	TYPICAL
UON	UNLESS OTHERWISE NOTED
V	VOLT
W	WATT
WP	WEATHERPROOF
XFMR	TRANSFORMER

THE CONTRACTOR SHALL BE RESPONSIBLE FOR SITE LOCATING ALL EXISTING UNDERGROUND SYSTEMS IN AREA OF NEW TRENCHING. THE CONTRACTOR SHALL BE RESPONSIBLE FOR REPAIRING ALL DAMAGED SYSTEMS TO OWNERS SATISFACTION. EXTREME CARE SHALL BE MAINTAINED DURING TRENCHING AS EXISTING SYSTEMS ARE KNOWN TO EXIST IN AREA. MODIFICATIONS TO EXISTING SYSTEMS MAY BE REQUIRED TO ACCOMMODATE NEW SYSTEM CONFIGURATION AND SHALL BE MADE BY THE CONTRACTOR WITHOUT EXTRA EXPENSE TO THE OWNER THE DRAWINGS AND SPECIFICATIONS ARE FOR THE ASSISTANCE AND GUIDANCE OF THE CONTRACTOR. EXACT LOCATIONS, DISTANCES AND ELEVATIONS WILL BE GOVERNED BY ACTUAL CONDITIONS. THE CONTRACTOR SHALL EXAMINE THE CONTRACT DOCUMENTS AND FIELD CONDITIONS TO DETERMINE EXACT ROUTING AND FINAL TERMINATIONS FOR ALL NEW WORK.

VERDE DESIGN
LANDSCAPE ARCHITECTURE
CIVIL ENGINEERING
SPORT PLANNING & DESIGN
2455 The Alameda
Santa Clara, CA 95050
tel: 408.985.7200
fax: 408.985.7260
www.VerdeDesignInc.com

STAMP

REGISTERED PROFESSIONAL ENGINEER
DEVIN CONWAY
No. C-56494
Signature
EXPIRATION DATE: June 30, 2019
STATE OF CALIFORNIA

CONSULTANT

REGISTERED PROFESSIONAL ENGINEER
JIMMY S. FERNANDEZ
E-18890
EXP. 06/30/19
ELECTRICAL
STATE OF CALIFORNIA

American Consulting Engineers Electrical, Inc.
1590 The Alameda, Suite 200
San Jose, CA 95126
408/236-2312
Fax: 408/236-2316
JOB # E17151.00

IDENTIFICATION STAMP
DIV. OF THE STATE ARCHITECT
APPL 01
FILE
AC ______ FLS ______ SS ______
DATE ______________________
DSA PROJECT TRACKING NO:
XXXX-XX

SHEET TITLE
GENERAL NOTES, SYMBOL LIST, ABBREVIATIONS AND FIXTURE SCHEDULE

PROJECT NAME
COLLEGE OF MARIN ATHLETIC FACILITIES IMPROVEMENTS

PROJECT ADDRESS
835 COLLEGE AVE.
KENTFIELD, CA
94904

SUBMITTAL	DATE
80% CD SUBMITTAL	06/16/17
100% SUBMITTAL	06/30/17

NO.	REVIEWS	DATE
△		
△		
△		
△		
△		
△		

DRAWN BY	CHECKED BY
	DC
DATE ISSUED 06/30/17	SCALE NO SCALE

PROJ. NO. 1702200

SHEET NO. E0.1

ALL IDEAS, DESIGNS, ARRANGEMENTS, AND PLANS INDICATED OR REPRESENTED BY THIS DRAWING ARE OWNED BY AND THE PROPERTY OF VERDE DESIGN, INC. AND WERE CREATED, EVOLVED, AND DEVELOPED FOR USE ON AND IN CONNECTION WITH THE SPECIFIED PROJECT. NONE OF SUCH IDEAS, DESIGNS, ARRANGEMENTS OR PLANS SHALL BE USED, REPRODUCED, OR PUBLISHED BY ANY METHOD, IN WHOLE OR IN PART, OR DISCLOSED TO ANY PERSON, FIRM, OR CORPORATION FOR ANY PURPOSE WHATSOEVER WITHOUT WRITTEN PERMISSION OF VERDE DESIGN, INC.

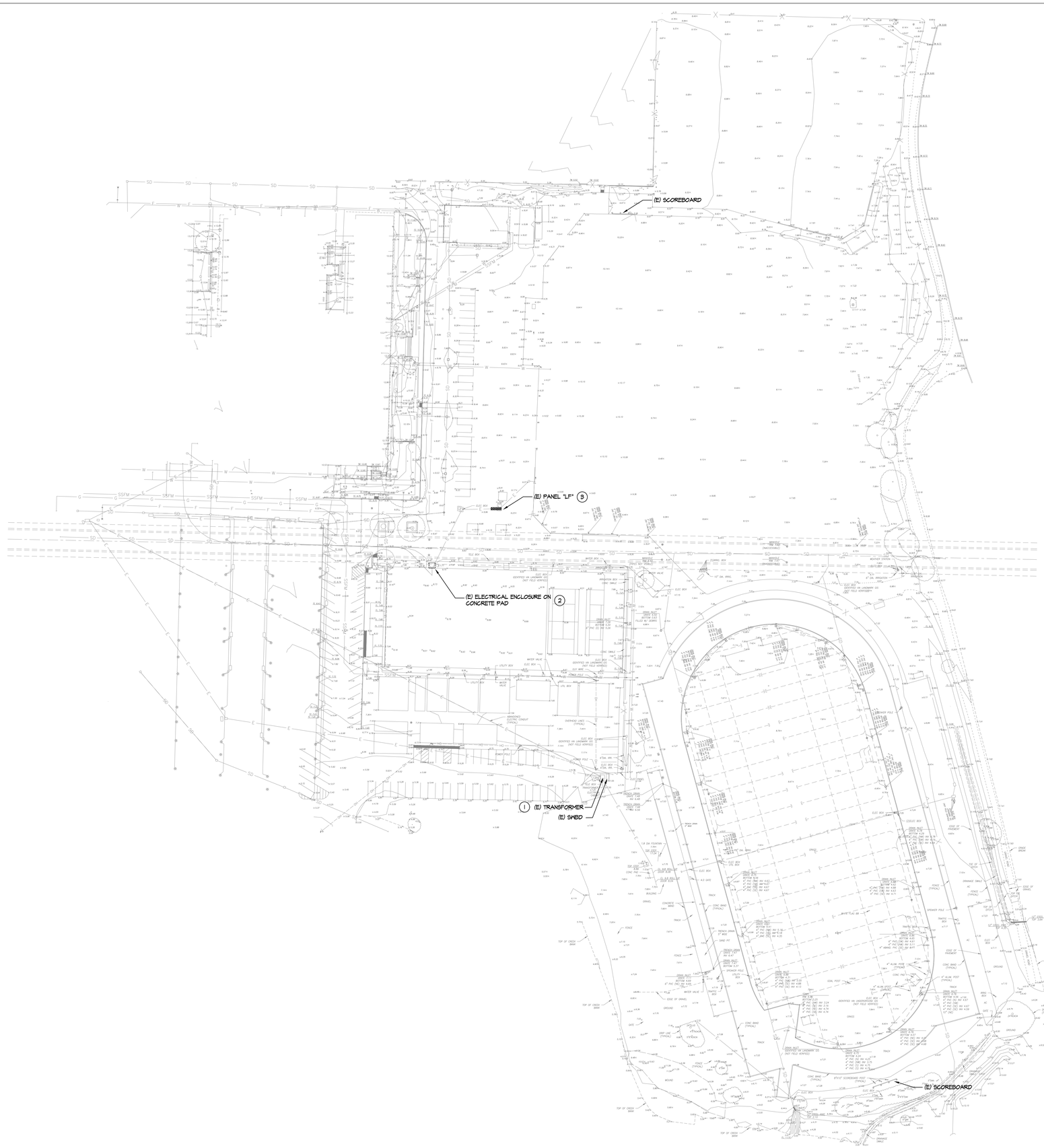

GENERAL DEMOLITION NOTES:

1. (E) PULL BOX SHOWN ON DRAWINGS TO REMAIN AND SHALL NEED TO BE ADJUSTED TO (N) FINISH GRADE. CONTRACTOR TO PROVIDE AND INCLUDE, IN BID, BOX ADJUSTMENTS. ADJUSTMENTS INCLUDE (N) GRAVEL AND ADDITIONAL PULL BOX APRON.
2. ALL (E) CONDUITS SHOWN ON DRAWINGS ARE DIAGRAMMATIC AND MAY NOT REFLECT EXACT ROUTING. CONTRACTORS TO INCLUDE IN BID PROFESSIONAL UNDERGROUND CONDUIT LOCATOR AS NEEDED FOR HE/SHE TO BE FAMILIAR WITH THE (E) SITE CONDITIONS AND PROVIDE REQUIRED WORK AND ADJUSTMENTS TO EXTEND/RECONNECT POWER CONDUITS AS NOTED IN DRAWINGS.

DEMOLITION SHEET NOTES:

1. CONTRACTOR TO VERIFY AND CONFIRM EXACT LOCATION OF EXISTING SWITCHBOARD AND PG&E TRANSFORMER.
2. (E) ELECTRICAL/POWER ENCLOSURE ON CONCRETE PAD IS IN WAY OF NEW CONSTRUCTION. THE CONTRACTOR SHALL DISCONNECT SPLICE CONNECTION AND PULL POWER FEEDERS TO NEAREST IN-GRADE PULL-BOX AS REQUIRED TO FACILITATE AREA FOR NEW CONSTRUCTION.
3. (E) DISTRIBUTION BOARD OR PANEL BOARD TO REMAIN.

1 **ELECTRICAL SITE PLAN - DEMOLITION**

E1.0 SCALE: 1" = 50'-0"

NORTH

VERDE DESIGN
LANDSCAPE ARCHITECTURE
CIVIL ENGINEERING
SPORT PLANNING & DESIGN
2455 The Alameda
Santa Clara, CA 95050
tel: 408.985.7200
fax: 408.985.7260
www.VerdeDesigninc.com

STAMP

REGISTERED PROFESSIONAL ENGINEER
CRISTIN CONROY
No. C-56494
Signature
EXPIRATION DATE: June 30, 2019
STATE OF CALIFORNIA

CONSULTANT

REGISTERED PROFESSIONAL ENGINEER
JAMES S. FERNANDEZ
E-16890
EXP. 06/30/19
ELECTRICAL
STATE OF CALIFORNIA

American Consulting Engineers Electrical, Inc.
1590 The Alameda, Suite 200
San Jose, CA 95126
JOB # E17151.00
408/236-2312
Fax: 408/236-2316

IDENTIFICATION STAMP
DIV. OF THE STATE ARCHITECT
APPL 01
FILE
AC _____ FLS _____ SS _____
DATE _____
DSA PROJECT TRACKING NO:
XXXX-XX

SHEET TITLE
ELECTRICAL SITE PLAN - DEMOLITION

PROJECT NAME
COLLEGE OF MARIN ATHLETIC FACILITIES IMPROVEMENTS

PROJECT ADDRESS
835 COLLEGE AVE.
KENTFIELD, CA
94904

SUBMITTAL	DATE
80% CD SUBMITTAL	06/16/17
100% SUBMITTAL	06/30/17

NO.	REVISIONS	DATE

DRAWN BY	CHECKED BY
MG	RC
DATE ISSUED 06/30/17	SCALE AS NOTED
PROJ. NO. 1702200	
SHEET NO. E1.0	

ALL IDEAS, DESIGNS, ARRANGEMENTS, AND PLANS INDICATED OR REPRESENTED BY THIS DRAWING ARE OWNED BY AND THE PROPERTY OF VERDE DESIGN, INC. AND WERE CREATED, EVOLVED, AND DEVELOPED FOR USE ON AND IN CONNECTION WITH THE SPECIFIED PROJECT. NONE OF SUCH IDEAS, DESIGNS, ARRANGEMENTS OR PLANS SHALL BE USED, REPRODUCED, OR PUBLISHED BY ANY METHOD, IN WHOLE OR IN PART, OR DISCLOSED TO ANY PERSON, FIRM, OR ASSOCIATION IN ANY MANNER WITHOUT WRITTEN PERMISSION BY VERDE DESIGN, INC.

DRAWING NAME: L:\projects\Year 2017\E17151_College of Marin Athletic Facility Improvements\E1.0_Site Plan Demolition.dwg
PLOT DATE: 07-17-17 PLOTTED BY: jsem

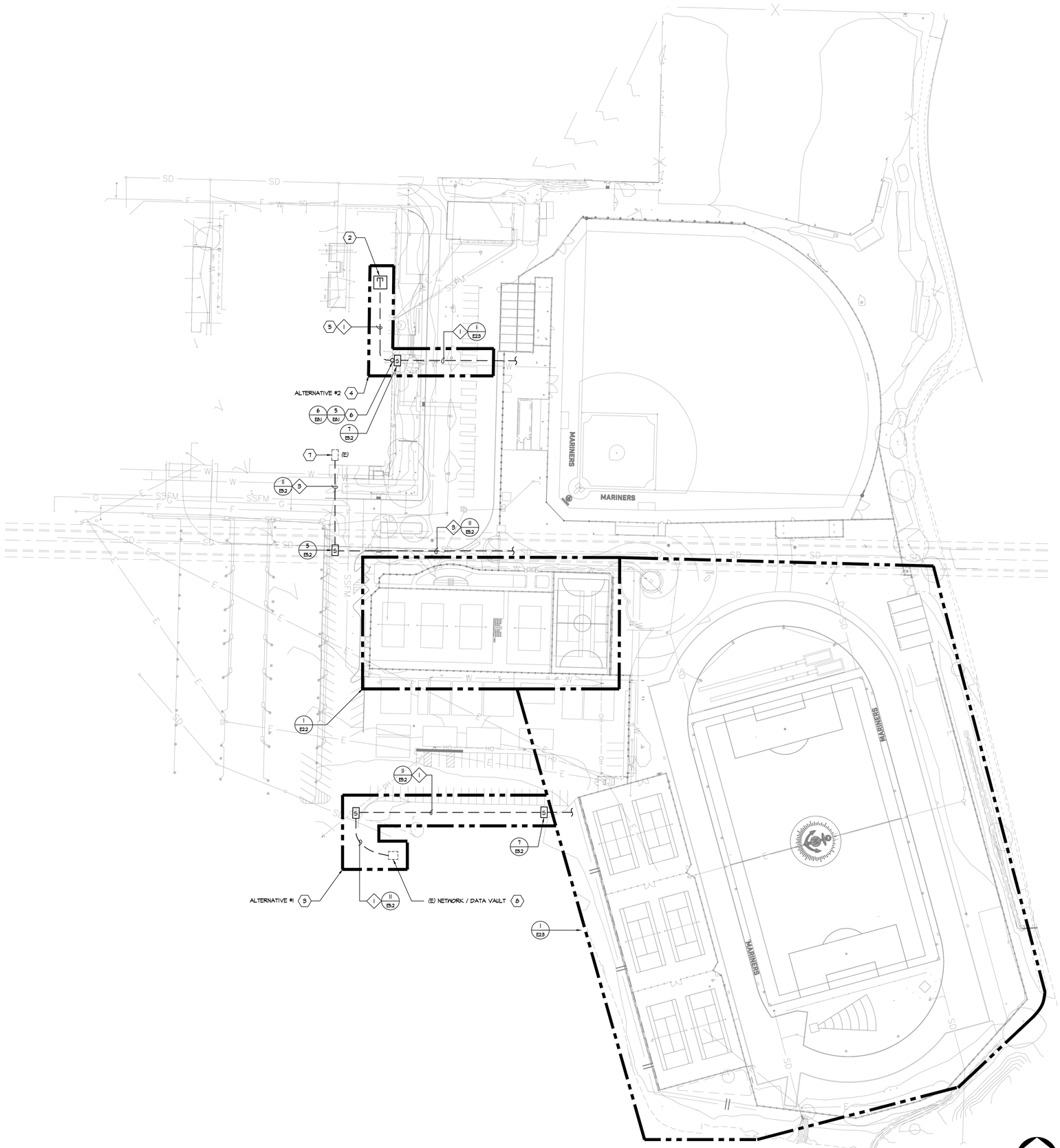

1 / E1.1 ELECTRICAL NEW SITE PLAN

SCALE: 1" = 50'-0"

NORTH

GENERAL NOTES:

1. SEE SINGLE LINE DIAGRAM FOR ADDITIONAL INFORMATION AND REQUIREMENTS.
2. CONTRACTOR TO SITE SURVEY (E) CONDITIONS AND LOCATIONS OF (E) UNDERGROUND SYSTEMS, WHERE (N) TRENCHWORK OCCURS PRIOR TO BIDDING. CONTRACTOR SHALL TAKE PROPER PRECAUTIONS TO ENSURE (E) UNDERGROUND SYSTEMS/CONDUIT/PIPES ARE NOT DAMAGED DURING INSTALLATION. CONTRACTOR IS RESPONSIBLE FOR ANY REPAIRS REQUIRED IN THE EVENT THE (E) UNDERGROUND SYSTEMS ARE DAMAGED AS A RESULT OF THE (N) ELECTRICAL TRENCHWORK.
3. PRIOR TO ALL (N) TRENCHES, CONTRACTOR TO USA ALL (E) ELECTRICAL CONDUITS AND OTHER UTILITIES TO FAMILIARIZE THEMSELVES WITH THE FIELD CONDITIONS AND ADJUST (N) TRENCHES ACCORDINGLY.
4. COORDINATE ALL (N) UNDERGROUND CONDUITS WITH EGRESS LIGHTING PLAN AND FA DRAWINGS. PROVIDE AND INSTALL CONDUIT IN COMMON TRENCH PER DETAIL 1/E4.3.
5. IN-GRADE PULL BOX IDENTIFIED WITH 'P' SHALL HAVE LID LABELED 'ELECTRICAL'.
6. IN-GRADE PULL BOX IDENTIFIED WITH 'S' SHALL HAVE LID LABELED 'SIGNAL'.
7. CONTRACTOR SHALL COORDINATE UNDERGROUND REQUIREMENTS WITH ALL OTHER TRADES TO AVOID CONFLICT.
8. CONTRACTOR SHALL BE RESPONSIBLE FOR ANY SAW CUTTING AND REMOVAL OF EXISTING SURFACES TO FACILITATE UNDERGROUND SYSTEMS. THE CONTRACTOR SHALL PATCH AND REPAIR ALL DAMAGED AND CUT SURFACES TO MATCH ADJACENT.
9. CONCRETE ENCASED ELECTRODE GROUNDING SYSTEM PROVIDED BY THE MANUFACTURER FOR ALL SPORT FIELD LIGHTS OTHERWISE GROUND PER DETAIL 5/E4.2.
10. CONTRACTOR TO COORDINATE ELECTRICAL SITE PLAN, FA AND PEDESTRIAN SITE PLAN TO COMBINE ALL UNDERGROUND CONDUITS IN COMMON TRENCH AS NECESSARY.
11. ALL EMPTY CONDUIT SHALL BE PROVIDED WITH NYLON PULL CORD AS NOTED IN THE SPECIFICATIONS.

SHEET NOTES:

1. SIGNAL PULL BOX WITH TRAFFIC RATED LID. LABEL LID "SIGNAL".
2. EXISTING NETWORK ROOM. CONTRACTOR TO SITE VERIFY EXACT LOCATION.
3. DATA ROUTING ALTERNATIVE #1. CONTRACTOR TO PROVIDE COST TO TRENCH AND INSTALL CONDUITS SHOWN.
4. DATA ROUTING ALTERNATIVE #2. CONTRACTOR TO PROVIDE COST TO TRENCH AND INSTALL CONDUITS SHOWN.
5. ROUTE CONDUIT CONCEAL INSIDE PE BUILDING T-BAR CEILING. IN THE EVENT T-BAR TILES ARE DAMAGED, CONTRACTOR SHALL REPLACE WITH NEW.
6. CONDUIT RISER AND PENETRATION INTO BUILDING.
7. EXISTING FIRE ALARM TERMINAL CAN (FATC). CONTRACTOR SHALL SITE VERIFY FOR EXACT LOCATION. PROVIDE NEW CONDUIT AS SHOWN TO SPORT FIELD.
8. EXISTING DATA VAULT. CONTRACTOR SHALL SITE VERIFY FOR EXACT LOCATION.

CONDUIT SCHEDULE:

1. (N) (1) 4"C - DATA
2. (N) (2) 2"C - DATA
3. (N) (1) 2"C - FIRE ALARM
4. (N) (1) 3"C - POWER
   (N) (4) 2"C - POWER
5. (N) (2) 2"C - POWER

VERDE DESIGN
LANDSCAPE ARCHITECTURE
CIVIL ENGINEERING
SPORT PLANNING & DESIGN
2455 The Alameda
Santa Clara, CA 95050
tel: 408.985.7200
fax: 408.985.7260
www.VerdeDesigninc.com

STAMP

REGISTERED PROFESSIONAL ENGINEER
TRISTIN CONROY
No. C-56494
Signature
EXPIRATION DATE: June 30, 2019
STATE OF CALIFORNIA

CONSULTANT

REGISTERED PROFESSIONAL ENGINEER
JAMY S. FERNANDEZ
E-16890
EXP. 06/30/19
ELECTRICAL
STATE OF CALIFORNIA

American Consulting Engineers Electrical, Inc.
1590 The Alameda, Suite 200
San Jose, CA 95126
JOB # E17151.00
408/236-2312
Fax: 408/236-2316

IDENTIFICATION STAMP
DIV. OF THE STATE ARCHITECT
APPL 01
FILE
AC _____ FLS _____ SS _____
DATE _____
DSA PROJECT TRACKING NO:
XXXX-XX

SHEET TITLE
ELECTRICAL
NEW SITE PLAN

PROJECT NAME
COLLEGE OF MARIN
ATHLETIC FACILITIES
IMPROVEMENTS

PROJECT ADDRESS
835 COLLEGE AVE.
KENTFIELD, CA
94904

SUBMITTAL	DATE
80% CD SUBMITTAL	06/16/17
100% SUBMITTAL	06/30/17

NO.	REVISIONS	DATE
1		
2		
3		
4		
5		
6		

DRAWN BY	CHECKED BY
	DC
DATE ISSUED 06/30/17	SCALE AS NOTED

PROJ. NO. 1702200

SHEET NO. E1.1

ALL IDEAS, DESIGNS, ARRANGEMENTS, AND PLANS INDICATED OR REPRESENTED BY THIS DRAWING ARE OWNED BY AND THE PROPERTY OF VERDE DESIGN, INC. AND WERE CREATED, EVOLVED, AND DEVELOPED FOR USE ON AND IN CONNECTION WITH THE SPECIFIED PROJECT. NONE OF SUCH IDEAS, DESIGNS, ARRANGEMENTS OR PLANS SHALL BE USED, REPRODUCED, OR PUBLISHED BY ANY METHOD, IN WHOLE OR IN PART, OR DISCLOSED TO ANY PERSON, FIRM, OR CORPORATION WITHOUT WRITTEN PERMISSION OF VERDE DESIGN, INC.

DRAWING NAME: L:\projects\Year 2017\E17151_College of Marin Athletic Facility Improvements\E1.1_Site Plan Power.dwg
PLOT DATE: 07-17-17 PLOTTED BY: jsem

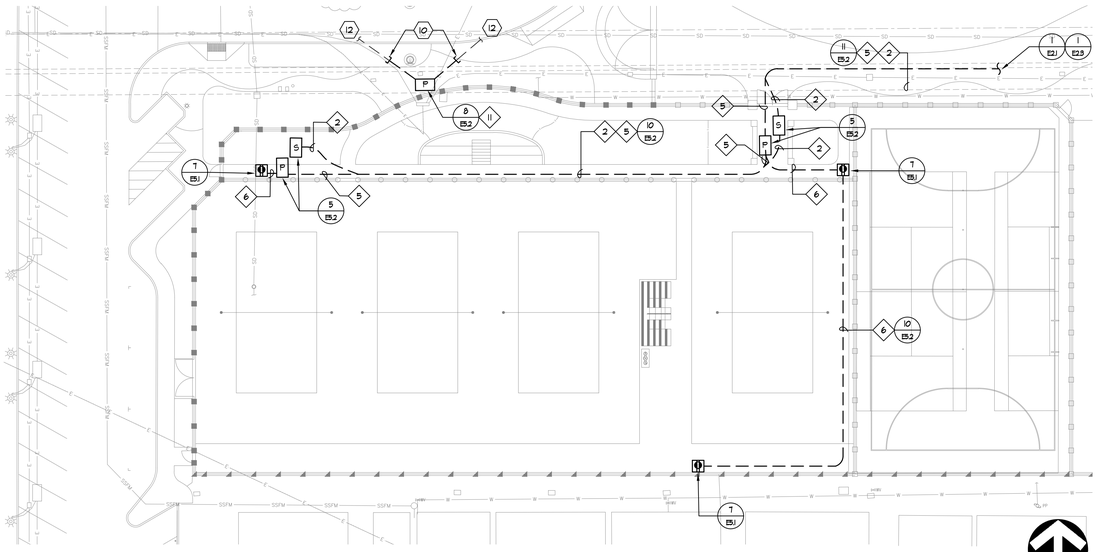

NORTH

0' 10' 20' 40' 60'

1 / E2.2 **ELECTRICAL FLOOR PLAN - PARKING/ ENTRY/ VOLLEYBALL/ FUTSAL**

SCALE: 1"=20'-0"

GENERAL NOTES:

1. ALL ELECTRICAL WORK SHALL COMPLY WITH THE 2013 CALIFORNIA ELECTRICAL CODE.
2. SEE SINGLE LINE DIAGRAM FOR POWER CONNECTION REQUIREMENTS.
3. CONNECT ALL DATA/TEL DEVICES PER THE DATA/TEL RISER DIAGRAM.
4. ROUTE ALL LOW VOLTAGE CABLES ON J-HOOKS FOR ACCESSIBLE CEILINGS AND T-BAR CEILINGS. PROVIDE CONDUIT FOR NON-ACCESSIBLE AND HARD LID INSTALLATIONS.
5. REFER TO ELECTRICAL PLAN OF MODULAR DRAWINGS FOR EXACT LOCATION OF ELECTRICAL PANEL AND POWER RECEPTACLES.
6. REFER TO FA DRAWING FOR UNDERGROUND CONDUIT BOXES.

CONDUIT SCHEDULE:

1. (N) (1) 4"C - DATA
2. (N) (2) 2"C - DATA
3. (N) (1) 2"C - FIRE ALARM
4. (N) (1) 3"C - POWER
   (N) (4) 2"C - POWER
5. (N) (2) 2"C - POWER
6. (N) (2) 1"C - POWER

SHEET NOTES:

1. PROVIDE (N) IDF. PROVIDE SURGE PROTECTION TYPE DOUBLE DUPLEX RECEPTACLE AND MOUNT IN BACK OF IDF. CONNECT DOUBLE DUPLEX RECEPTACLE WITH (2) #12 + (1) #12 GND - 3/4"C TO DEDICATED CIRCUIT IN PORTABLE ELECTRICAL PANEL. PROVIDE 20A-1P CIRCUIT BREAKER IN AVAILABLE SPACE AS REQUIRED. SEE DATA/TEL RISER DIAGRAM FOR MORE INFORMATION.
2. PROVIDE SURFACE MOUNTED WIREMOLD J-BOX AT 18" AFF FOR DATA RECEPTACLE UON. MOUNT ADJACENT TO MODULAR POWER RECEPTACLE. CONNECT WITH WIREMOLD #2400 SURFACE RACEWAY FROM J-BOX TO ACCESSIBLE CEILING. WIREMOLD J-BOX SHALL BE COMPATIBLE WITH WIREMOLD #2400 SURFACE RACEWAY. PROVIDE WIREMOLD DROP CEILING CONNECTOR FOR TRANSITION TO ACCESSIBLE CEILING.
3. (N) MODULAR ELECTRICAL PANEL. SEE ELECTRICAL PLANS OF MODUALAR DRAWINGS FOR EXACT LOCATION.
4. PROVIDE 12" x 12" x 4"; NEMA-1 PULL CAN AND LOCATE BELOW PRESS BOX TABLE TOP. STUB CONDUIT IN BOX WITH PULL STRING. PROVIDE ENGRAVED NAMEPLATE AND IDENTIFY WITH "SCOREBOARD CONTROLS".
5. STUB CONDUIT IN CEILING.
6. NO EXPOSED CONDUIT RISER ALLOWED BEHIND MODULAR BLDGS. CONTRACTOR TO COORDINATE WITH MODULAR MANUFACTURER AND ROUTE CONDUITS BELOW GRADE AND PENETRATE FLOOR TO CONNECT TO (N) PNL OR IDF.
7. LOCATE (E) MODULAR EXTERIOR LIGHTS AND REPLACE WITH (N) WALL MOUNTED LEDS. COORDINATE MODULAR DRAWING EXACT LOCATION OF (E) 120V POWER CONNECTION.
8. POWER OUTLETS BY MODULAR MANUFACTURER.
9. DATA OUTLET WITH TWO PORTS. ONE WITH RJ-45 AND THE OTHER SPARE PORT.
10. CONTRACTOR TO INTERCEPT EXISTING CONDUITS WITH NEW TO NEW IN-GRADE PULL-BOX AS SHOWN. MATCH EXISTING CONDUIT SIZES.
11. PROVIDE NEW POWER PULL-BOX. SEE LANDSCAPE DRAWINGS FOR EXACT LOCATION. PULL EXISTING FEEDERS INTO NEW PULL-BOX. PROVIDE NEW SPLICE LUG TO RECONNECT EXISTING FEEDERS. NEW SPLICE LUG SHALL BE RATED FOR DIRECT BURIAL, OUTDOOR USE, AND SUBMERSIBLE APPLICATION.
12. EXISTING CONDUITS TO EXISTING PULL-BOX TO REMAIN.

VERDE DESIGN
LANDSCAPE ARCHITECTURE
CIVIL ENGINEERING
SPORT PLANNING & DESIGN
2455 The Alameda
Santa Clara, CA 95050
tel: 408.985.7200
fax: 408.985.7260
www.VerdeDesigninc.com

STAMP

REGISTERED PROFESSIONAL ENGINEER
DUSTIN CONROY
No. C-56494
Signature
EXPIRATION DATE: June 30, 2019
STATE OF CALIFORNIA

CONSULTANT

REGISTERED PROFESSIONAL ENGINEER
JEFFREY S. FREITAS
E-16890
EXP. 06/30/19
ELECTRICAL
STATE OF CALIFORNIA

American Consulting Engineers Electrical, Inc.
1590 The Alameda, Suite 200
San Jose, CA 95126
408/236-2312
Fax: 408/236-2316
JOB # E17151.00

IDENTIFICATION STAMP
DIV. OF THE STATE ARCHITECT
APPL 01
FILE
AC _____ FLS _____ SS _____
DATE _____
DSA PROJECT TRACKING NO:
XXXX-XX

SHEET TITLE
ELECTRICAL FLOOR PLAN
PARKING/ENTRY/
VOLLEYBALL/FUTSAL

PROJECT NAME
COLLEGE OF MARIN
ATHLETIC FACILITIES
IMPROVEMENTS

PROJECT ADDRESS
835 COLLEGE AVE.
KENTFIELD, CA
94904

SUBMITTAL	DATE
80% CD SUBMITTAL	06/16/17
100% SUBMITTAL	06/30/17

NO.	REVISIONS	DATE
1		
2		
3		
4		
5		
6		

DRAWN BY	CHECKED BY
	DC
DATE ISSUED	SCALE
06/30/17	AS NOTED

PROJ. NO.
1702200

SHEET NO.
E2.2

ALL IDEAS, DESIGNS, ARRANGEMENTS, AND PLANS INDICATED OR REPRESENTED BY THIS DRAWING ARE OWNED BY AND THE PROPERTY OF VERDE DESIGN, INC. AND WERE CREATED, EVOLVED, AND DEVELOPED FOR USE ON AND IN CONNECTION WITH THE SPECIFIED PROJECT. NONE OF SUCH IDEAS, DESIGNS, ARRANGEMENTS OR PLANS SHALL BE USED, REPRODUCED, OR PUBLISHED BY ANY METHOD, IN WHOLE OR IN PART, OR DISCLOSED TO ANY PERSON, FIRM, OR CORPORATION FOR ANY PURPOSE WHATSOEVER WITHOUT WRITTEN PERMISSION OF VERDE DESIGN, INC.

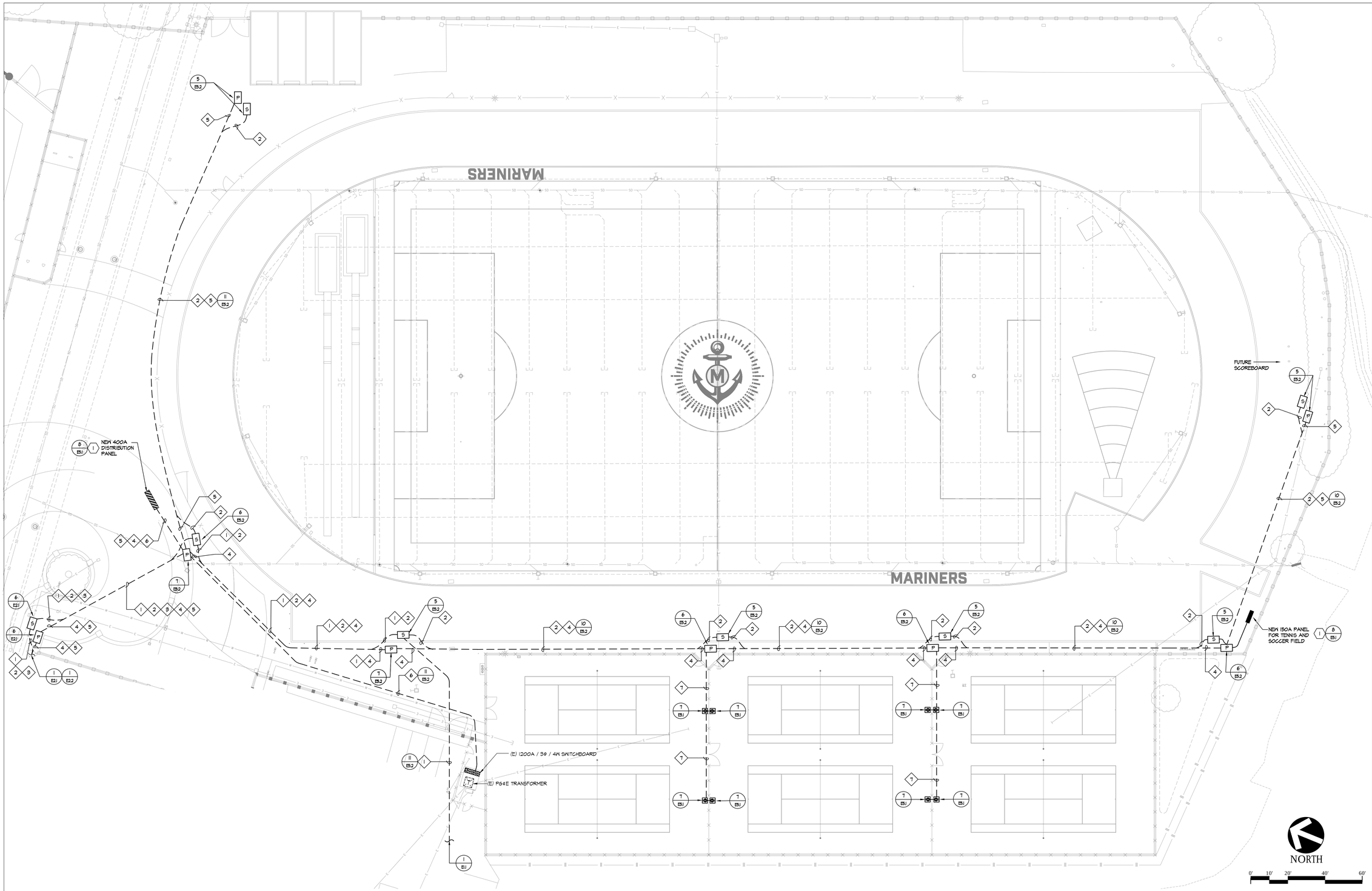

1 / E2.3 ELECTRICAL FLOOR PLAN - SOCCER/ LACROSSE AND TENNIS COURTS

SCALE: 1"=20'-0"

GENERAL NOTES:

1. ALL ELECTRICAL WORK SHALL COMPLY WITH THE 2013 CALIFORNIA ELECTRICAL CODE.
2. SEE SINGLE LINE DIAGRAM FOR POWER CONNECTION REQUIREMENTS.
3. CONNECT ALL DATA/TEL DEVICES PER THE DATA/TEL RISER DIAGRAM.
4. ROUTE ALL LOW VOLTAGE CABLES ON J-HOOKS FOR ACCESSIBLE CEILING AND T-BAR CEILINGS. PROVIDE CONDUIT FOR NON-ACCESSIBLE AND HARD LID INSTALLATIONS.
5. REFER TO ELECTRICAL PLAN OF MODULAR DRAWINGS FOR EXACT LOCATION OF ELECTRICAL PANEL AND POWER RECEPTACLES.
6. REFER TO FA DRAWING FOR UNDERGROUND CONDUIT BOXES.

CONDUIT SCHEDULE:

1. (N) (1) 4"C - DATA
2. (N) (2) 2"C - DATA
3. (N) (1) 2"C - FIRE ALARM
4. (N) (1) 3"C - POWER
   (N) (4) 2"C - POWER
5. (N) (2) 2"C - POWER
6. (N) (2) 3"C - POWER
7. (N) (2) 1-1/2"C - POWER (RECEPTACLE)

VERDE DESIGN
LANDSCAPE ARCHITECTURE
CIVIL ENGINEERING
SPORT PLANNING & DESIGN
2455 The Alameda
Santa Clara, CA 95050
tel: 408.985.7200
fax: 408.985.7260
www.VerdeDesigninc.com

STAMP

REGISTERED PROFESSIONAL ENGINEER
DUSTIN CONROY
No. C-56494
Signature
EXPIRATION DATE: June 30, 2019
STATE OF CALIFORNIA

CONSULTANT

REGISTERED PROFESSIONAL ENGINEER
JAMY S. FERRAZZONI
E-16890
EXP. 06/30/19
ELECTRICAL
STATE OF CALIFORNIA

American Consulting Engineers Electrical, Inc.
1590 The Alameda, Suite 200
San Jose, Ca 95126
JOB # E17151.00
408/236-2312
Fax: 408/236-2316

IDENTIFICATION STAMP
DIV. OF THE STATE ARCHITECT
APPL 01
FILE
AC _____ FLS _____ SS _____
DATE _____
DSA PROJECT TRACKING NO:
XXXX-XX

SHEET TITLE
ELECTRICAL FLOOR PLAN SOCCER /LACROSSE AND TENNIS COURTS

PROJECT NAME
COLLEGE OF MARIN ATHLETIC FACILITIES IMPROVEMENTS

PROJECT ADDRESS
835 COLLEGE AVE.
KENTFIELD, CA
94904

SUBMITTAL	DATE
80% CD SUBMITTAL	06/16/17
100% SUBMITTAL	06/30/17

NO.	REVISIONS	DATE

DRAWN BY	CHECKED BY DC
DATE ISSUED 06/30/17	SCALE AS NOTED
PROJ. NO. 1702200	
SHEET NO. E2.3	

ALL IDEAS, DESIGNS, ARRANGEMENTS, AND PLANS INDICATED OR REPRESENTED BY THIS DRAWING ARE OWNED BY AND THE PROPERTY OF VERDE DESIGN, INC. AND WERE CREATED, EVOLVED, AND DEVELOPED FOR USE ON AND IN CONNECTION WITH THE SPECIFIED PROJECT. NONE OF SUCH IDEAS, DESIGNS, ARRANGEMENTS OR PLANS SHALL BE USED, REPRODUCED, OR PUBLISHED BY ANY METHOD, IN WHOLE OR IN PART, OR DISCLOSED TO ANY PERSON, FIRM, OR

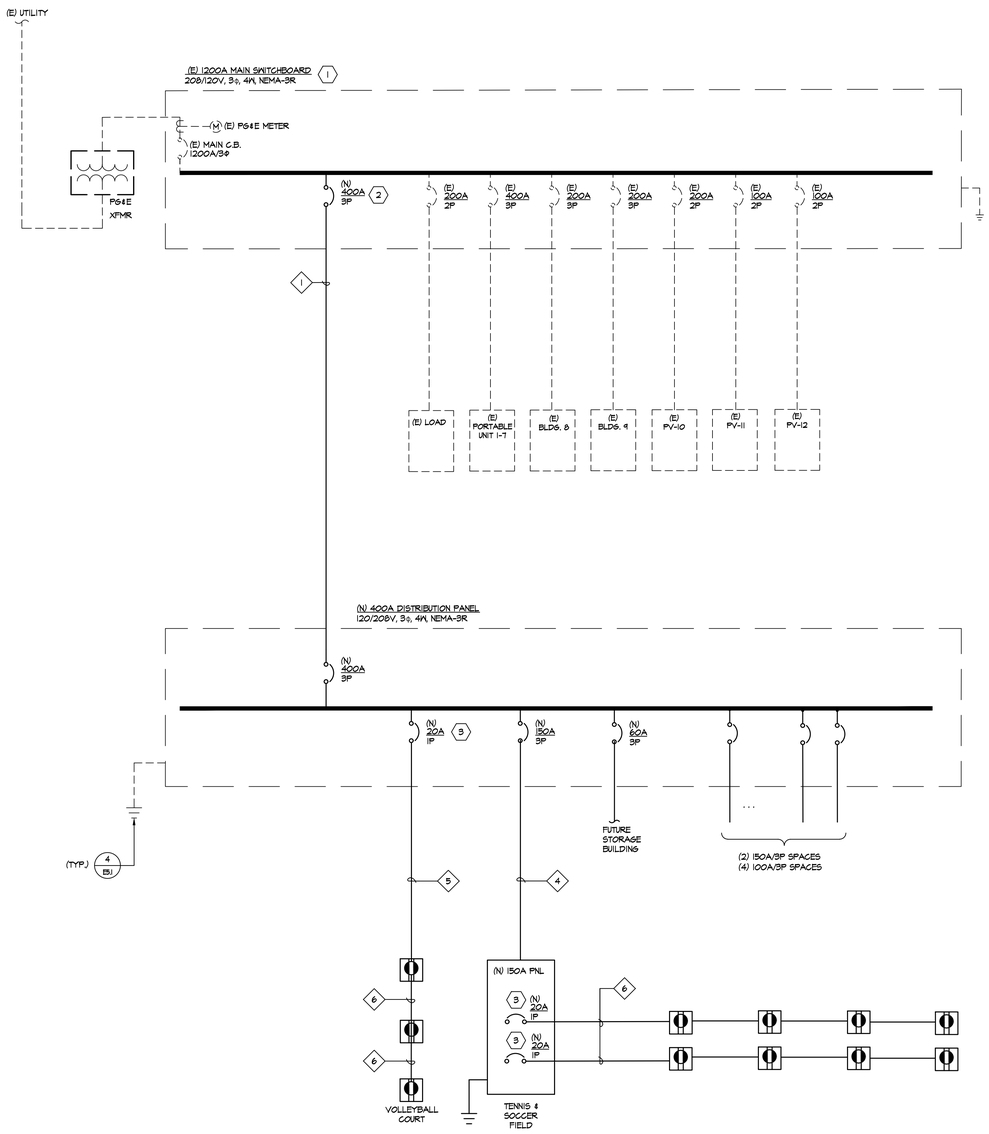

GENERAL NOTES:

1. SEE SITE PLAN FOR APPROXIMATE LOCATION OF (E) MAIN SWITCHBOARD.
2. ALL NEW CIRCUIT BREAKERS IN SWBD OR DIST. BOARD SHALL BE PROVIDED WITH NAME PLATE TO IDENTIFY EQUIPMENT. SEE SPECS FOR REQUIREMENTS.

SHEET NOTES:

1. (E) 1200A MAIN ELECTRICAL SWITCHBOARD "MSB" TO REMAIN.
2. PROVIDE (N) BREAKER. MATCH FROM STYLE AND BRACING.
3. CONTRACTOR TO PROVIDE GFCI BREAKERS IN MODULAR PANEL.

CONDUIT SCHEDULE:

1. (N) 2 SETS OF (1) 3"C - (4) #400 KCMIL + (1) #1/0 CU GND
2. (N) (1) 2"C - (4) #2/0 + (1) #4 CU GND
3. (N) 3"C - (4) #400 KCMIL + (1) #1/0 CU GND
4. (N) 2 SETS OF (1) 3"C - (4) #300 KCMIL + (1) #2 CU GND
5. (N) 1-1/4"C - (4) #2 + (1) #8 CU GND
6. (N) (1) 1-1/2"C - (4) #1 + (1) #6 CU GND

1 / E4.1 **ELECTRICAL SINGLE LINE DIAGRAM**

NO SCALE

VERDE DESIGN
LANDSCAPE ARCHITECTURE
CIVIL ENGINEERING
SPORT PLANNING & DESIGN
2455 The Alameda
Santa Clara, CA 95050
tel: 408.985.7200
fax: 408.985.7260
www.VerdeDesigninc.com

STAMP

REGISTERED PROFESSIONAL ENGINEER
DEVIN CONWAY
No. C-56494
Signature
EXPIRATION DATE: June 30, 2019
STATE OF CALIFORNIA

CONSULTANT

REGISTERED PROFESSIONAL ENGINEER
JAMMY S. FERNANDEZ
E-16890
EXP. 06/30/19
ELECTRICAL
STATE OF CALIFORNIA

American Consulting Engineers Electrical, Inc.
1590 The Alameda, Suite 200
San Jose, CA 95126
JOB # E17151.00
408/236-2312
Fax: 408/236-2316

IDENTIFICATION STAMP
DIV. OF THE STATE ARCHITECT
APPL 01
FILE
AC _____ FLS _____ SS _____
DATE _____
DSA PROJECT TRACKING NO:
XXXX-XX

SHEET TITLE
ELECTRICAL
SINGLE LINE DIAGRAM

PROJECT NAME
COLLEGE OF MARIN
ATHLETIC FACILITIES
IMPROVEMENTS

PROJECT ADDRESS
835 COLLEGE AVE.
KENTFIELD, CA
94904

SUBMITTAL	DATE
80% CD SUBMITTAL	06/16/17
100% SUBMITTAL	06/30/17

NO.	REVISIONS	DATE

DRAWN BY	CHECKED BY
	DC
DATE ISSUED	SCALE
06/30/17	AS NOTED

PROJ. NO.
1702200

SHEET NO.
E4.1

ALL IDEAS, DESIGNS, ARRANGEMENTS, AND PLANS INDICATED OR REPRESENTED BY THIS DRAWING ARE OWNED BY AND THE PROPERTY OF VERDE DESIGN, INC. AND WERE CREATED, EVOLVED, AND DEVELOPED FOR USE ON AND IN CONNECTION WITH THE SPECIFIED PROJECT. NONE OF SUCH IDEAS, DESIGNS, ARRANGEMENTS OR PLANS SHALL BE USED, REPRODUCED, OR PUBLISHED BY ANY METHOD, IN WHOLE OR IN PART, OR DISCLOSED TO ANY PERSON, FIRM, OR CORPORATION FOR ANY PURPOSE WHATSOEVER WITHOUT WRITTEN PERMISSION OF VERDE DESIGN, INC.

DRAWING NAME: L:\projects\Year 2017\E17151_College of Marin Athletic Facility Improvements\E4.1_Single Line Diagram.dwg
PLOT DATE: 07-17-17 PLOTTED BY: jsem

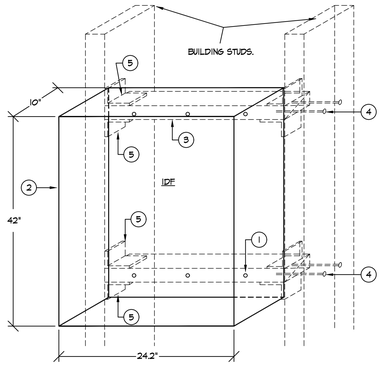

1. ¾"Ø WITH 2" MINIMUM PENETRATION INTO BUILDING. (6) LAG SCREWS PER PANEL CAN, TYPCIAL. LAG SCREW SHALL PENETRATE COMPLETELY.
2. IDF CABINET. 42"H X 24.2"W X 10"D. VERIFY DIMENSIONS WITH MANUFACTURER. (MAX WEIGHT 150 LBS)
3. BLOCKING 3" x 4".
4. PROVIDE (4) - 16d STRONG HOLD NAILS TO FASTEN BLOCKING TO BUILDING STUDS, (2) AT EACH END (TYP).
5. SIMPSON A34 CLIPS TOP & BOTTOM BOTH SIDES TYPICAL.

1 / E5.1 IDF INSTALLATION #1 - WOOD STUDS

NOT TO SCALE

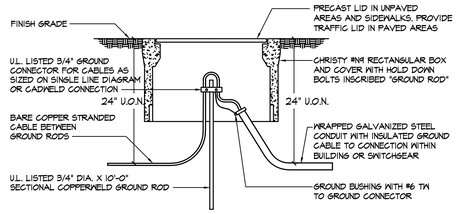

NOTE:
SEE SINGLE LINE DIAGRAM AND FLOOR PLANS FOR SIZE OF CONDUCTORS AND ARRANGEMENT OF GROUNDING SYSTEM

2 / E5.1 GROUND ROD INSPECTION WELL

NOT TO SCALE

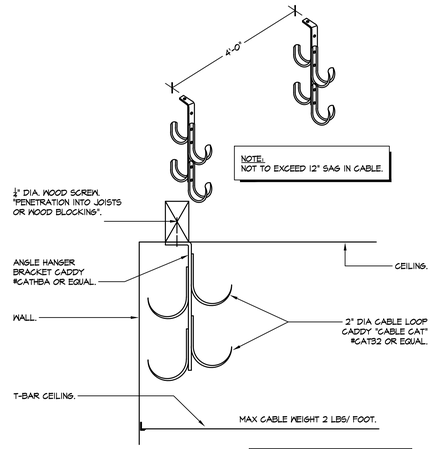

NOTE:
EACH SYSTEM (DATA, TEL, CATV, PA/CLOCK, SEC, EMS) SHALL HAVE A DEDICATED J-HOOK SUPPORT, U.O.N. CONDUIT THROUGH NON-ACCESSIBLE CEILING AND PENETRATION THROUGH WALL SHALL BE PROVIDED AS REQUIRED, U.O.N.

3 / E5.1 LOW VOLTAGE CABLE SUPPORT DETAIL

SCALE: NOT TO SCALE

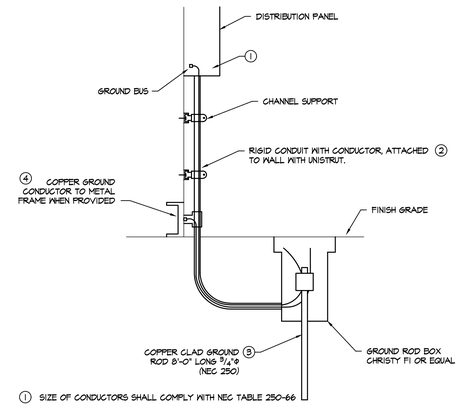

1. SIZE OF CONDUCTORS SHALL COMPLY WITH NEC TABLE 250-66
2. BOND SEPARATE CONDUCTORS FROM GROUND ROD TO ELECTRICAL PANEL AND TO METAL BUILDING FRAME (NEC 250-50). IN ADDITION TO DETAIL ABOVE, BOND THE ELECTRICAL GROUND TO NEAREST METALLIC COLD WATER PIPE. (NEC 250-50)
3. CHECK RESISTANCE TO GROUND, IF RESISTANCE EXCEEDS 25 OHMS, INSTALL ADDITIONAL GROUND RODS AS REQUIRED. (NEC 250-56)
4. ALL MODULES OF METAL FRAME BUILDINGS SHALL BE ELECTRICALLY BONDED TOGETHER. (BOLTING ONLY IS NOT ACCEPTABLE BONDING.)

4 / E5.1 TYPICAL GROUND INSTALLATION

SCALE: NOT TO SCALE

NOTE: GROUNDING TEST MUST BE BY INDEPENDENT LICENSED ELECTRICAL CONTRACTOR OR TESTING LABORATORY.

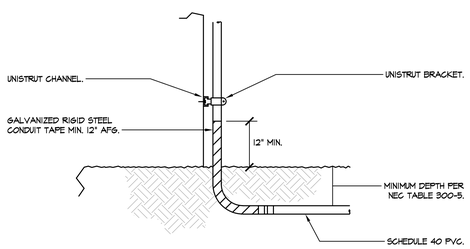

NOTE:

1. FOR WOOD STUD WALL: USE 3/8" LAG BOLT WITH MIN. 3/4" EMBEDMENT INTO STUDS. (ONE AT EACH END OF BRACKET)
2. FOR CONCRETE WALL: USE 3/8" WEDGE ANCHOR WITH MIN. 2-1/2" EMBEDMENT INTO CONCRETE WALL. (ONE AT EACH END OF BRACKET).

5 / E5.1 UNDERGROUND CONDUIT RISER DETAIL

SCALE: NOT TO SCALE

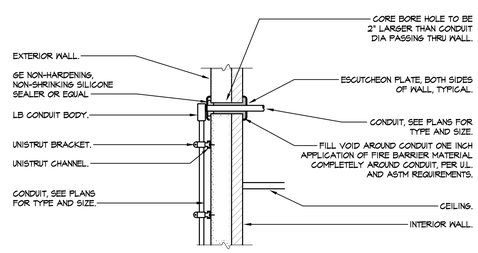

NOTE:
PER U.L. FIRE RESISTANCE DIRECTORY SYSTEM WL1002

6 / E5.1 CONDUIT WALL PENETRATION DETAIL

SCALE: NOT TO SCALE

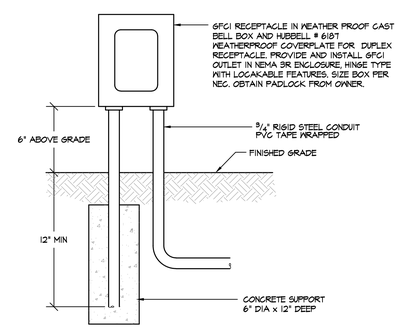

7 / E5.1 OUTDOOR 'GFCI' RECEPTACLE DETAIL

NOT TO SCALE

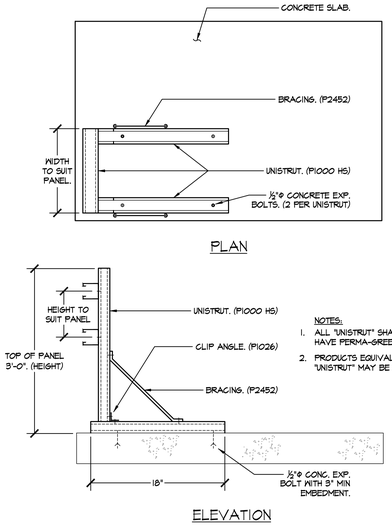

NOTES:

1. ALL "UNISTRUT" SHALL HAVE PERMA-GREEN FINISH.
2. PRODUCTS EQUIVALENT TO "UNISTRUT" MAY BE SUBSTITUTED.

8 / E5.1 PANEL SUPPORT ON CONCRETE SLAB

NOT TO SCALE

VERDE DESIGN
LANDSCAPE ARCHITECTURE
CIVIL ENGINEERING
SPORT PLANNING & DESIGN
2455 The Alameda
Santa Clara, CA 95050
tel: 408.985.7200
fax: 408.985.7260
www.VerdeDesigninc.com

STAMP

REGISTERED PROFESSIONAL ENGINEER — DUSTIN COMBS — No. C-56494 — Signature — EXPIRATION DATE: June 30, 2019 — STATE OF CALIFORNIA

CONSULTANT

REGISTERED PROFESSIONAL ENGINEER — JAMY S. TEDESCO — E-16890 — EXP. 06/30/19 — ELECTRICAL — STATE OF CALIFORNIA

American Consulting Engineers Electrical, Inc.
1590 The Alameda, Suite 200
San Jose, CA 95126
408/236-2312
Fax: 408/236-2316
JOB # E17151.00

IDENTIFICATION STAMP
DIV. OF THE STATE ARCHITECT
APPL 01
FILE
AC _____ FLS _____ SS _____
DATE _____
DSA PROJECT TRACKING NO:
XXXX-XX

SHEET TITLE
ELECTRICAL DETAILS

PROJECT NAME
COLLEGE OF MARIN
ATHLETIC FACILITIES
IMPROVEMENTS

PROJECT ADDRESS
835 COLLEGE AVE.
KENTFIELD, CA
94904

SUBMITTAL	DATE
80% CD SUBMITTAL	06/16/17
100% SUBMITTAL	06/30/17

NO.	REVISIONS	DATE

DRAWN BY	CHECKED BY
	DC
DATE ISSUED 06/30/17	SCALE AS NOTED
PROJ. NO. 1702200	
SHEET NO. E5.1	

ALL IDEAS, DESIGNS, ARRANGEMENTS, AND PLANS INDICATED OR REPRESENTED BY THIS DRAWING ARE OWNED BY AND THE PROPERTY OF VERDE DESIGN, INC. AND WERE CREATED, EVOLVED, AND DEVELOPED FOR USE ON AND IN CONNECTION WITH THE SPECIFIED PROJECT. NONE OF SUCH IDEAS, DESIGNS, ARRANGEMENTS OR PLANS SHALL BE USED, REPRODUCED, OR PUBLISHED BY ANY METHOD, IN WHOLE OR IN PART, OR DISCLOSED TO ANY PERSON, FIRM, OR CORPORATION FOR ANY PURPOSE WHATSOEVER WITHOUT THE WRITTEN PERMISSION OF VERDE DESIGN, INC.

DRAWING NAME: L:\projects\Year 2017\E17151_College of Marin Athletic Facility Improvements\E5.1_Electrical Details.dwg
PLOT DATE: 07-17-17 PLOTTED BY: jsem

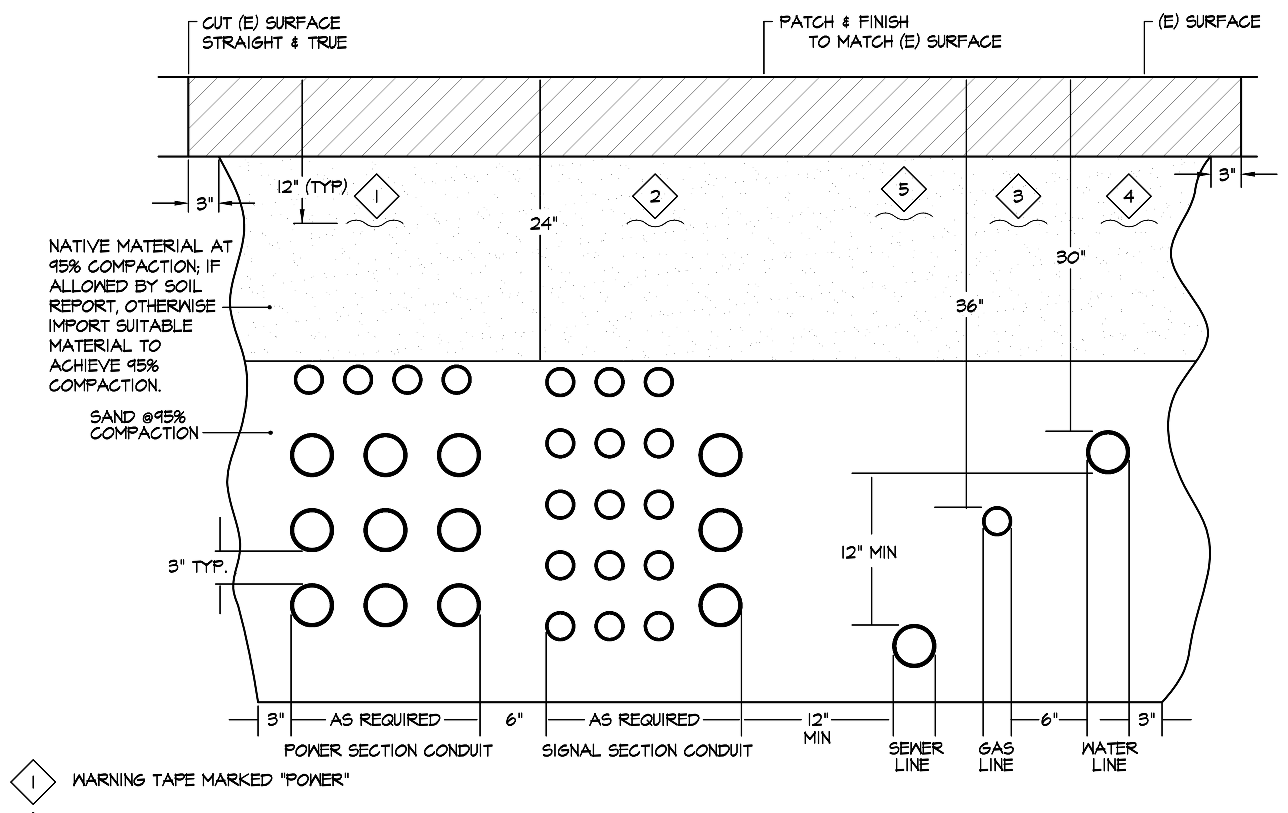

1. WARNING TAPE MARKED "POWER"
2. WARNING TAPE MARKED "SIGNAL"
3. WARNING TAPE MARKED "GAS"
4. WARNING TAPE MARKED "WATER"
5. WARNING TAPE MARKED "SEWER"

NOTES:

1. ALL ELECTRICAL TRENCH WORK SHALL BE THE RESPONSIBILITY OF THE ELECTRICAL CONTRACTOR. COORDINATE WITH PLUMBING CONTRACTOR LOCATION OF GAS AND WATER PIPES.
2. MINIMUM SPACING BETWEEN CONDUITS IS 3"
3. SEE SITE/FLOOR PLANS AND SPECIFICATIONS FOR CONDUIT REQUIREMENTS.

1 E5.2 TYPICAL JOINT TRENCH & DUCT BANK DETAIL

NOT TO SCALE

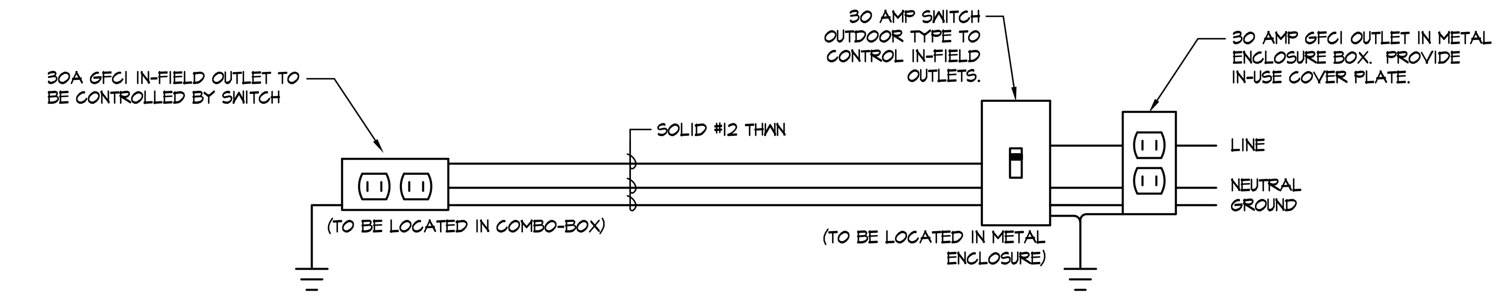

TYPICAL WIRING DIAGRAM

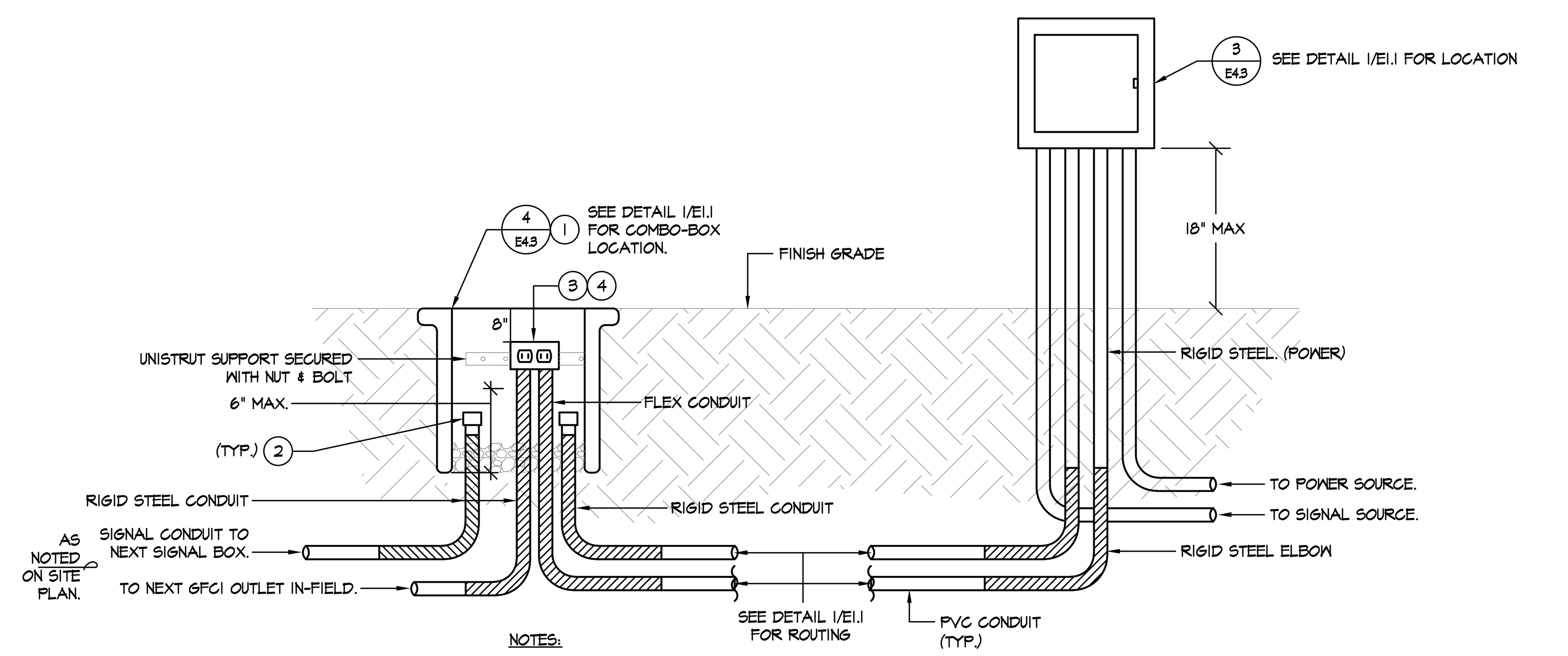

NOTES:

1. COMBO-BOX SHALL BE INSTALLED WITH PROPER PIPE DRAINAGE SYSTEM TO AVOID OUTLET HAZARD.
2. STUB SIGNAL CONDUIT IN SIGNAL PULL SECTION OF COMBO-BOX. PROVIDE CAP AND PULL STRING.
3. 1-GANG ALUMINUM CAST WITH GFCI SINGLE DUPLEX. COVER PLATE SHALL BE CLEAR IN USE SHALLOW COVER TYPE. "LEGRAND" # WIUC10SB.
4. LABEL OUTLET WITH ENGRAVED NAMEPLATE. IDENTIFY AS OUTLET "IN-FIELD OUTLET #1". REMAINING OUTLETS WILL BE NUMBERED CONSECUTIVELY.

TYPICAL ELEVATION SWITCH DETAIL

2 E5.2 TYPICAL SWITCHED & OUTLET DETAIL

NOT TO SCALE

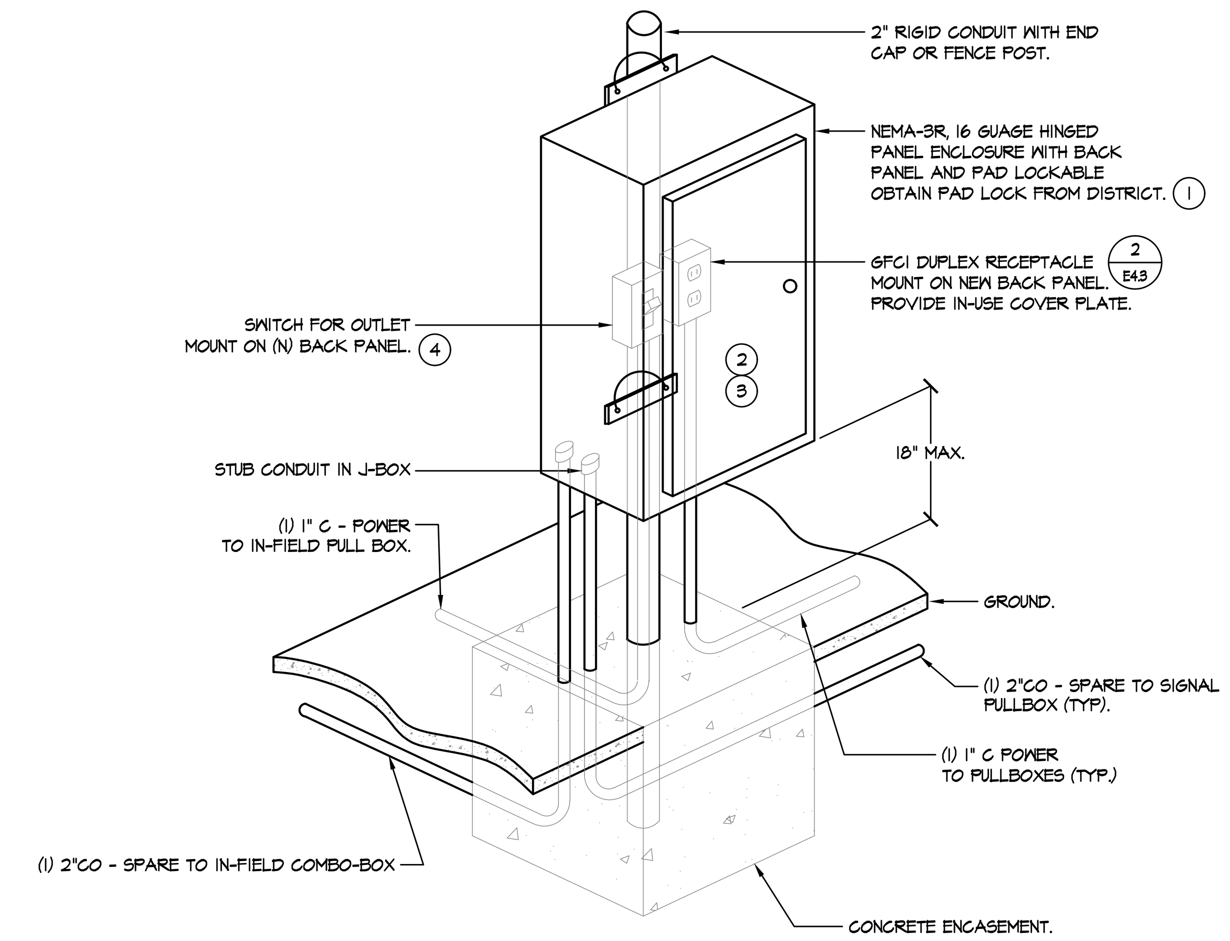

NOTES:

1. PULL CAN SHALL BE PROVIDED WITH SEPERATORS TO DIVIDE POWER & SIGNAL. PROVIDE AS REQUIRED TO COMPLY WITH N.E.C. NEMA-3R PULL CAN SHALL BE APPROVED U.L. LISTED.
2. PROVIDE ENGRAVED NAME PLATE. IDENTIFY AS ELECTRICAL BOX #1. REMAINING BOXES WILL BE NUMBERED CONSECUTIVELY. NAME PLATE SHALL BE PROVIDED PER SPECIFICATIONS.
3. PROVIDE ADDITIONAL ENGRAVED NAME PLATE FOR SWITCH CONTROL. IDENTIFY AS "SW INSIDE FOR IN-FIELD OUTLETS".
4. PROVIDE ENGRAVED NAMEPLATE NEXT TO SWITCH TO IDENTIFY IN-FIELD OUTLETS. IDENTIFY AS "POWER TO IN-FIELD OUTLETS #1".

3 E5.2 METAL ENCLOSURE DETAIL

NOT TO SCALE

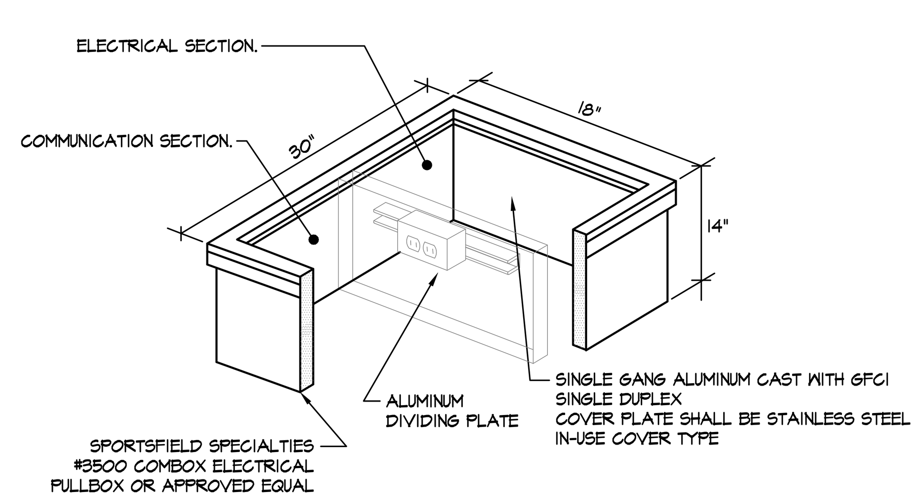

4 E5.2 TYPICAL OUTLET IN COMBO-BOX DETAIL

NOT TO SCALE

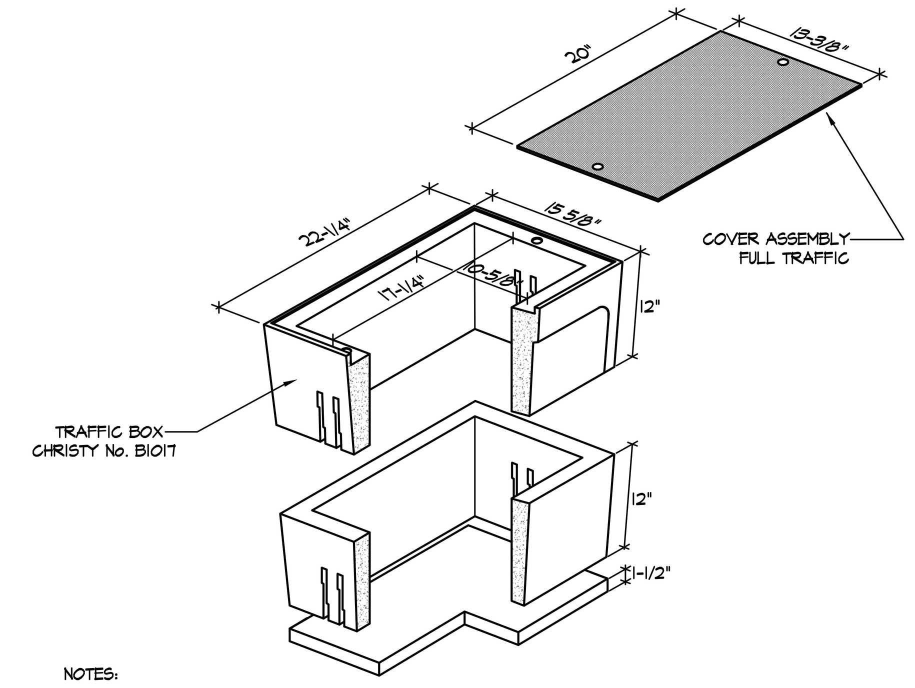

NOTES:

1. HIGH DENSITY REINFORCED CONCRETE BOX WITH NON-SETTING SHOULDERS POSITIONED TO MAINTAIN GRADE AND FACILITATE BACK FILLING. APPROXIMATE DIMENSIONS SHOWN.
2. ALL CONDUITS SHALL ENTER FROM SIDES OF PULL BOX. CONTRACTOR SHALL PROVIDE PULL BOX EXTENSION AS REQUIRED. NO CONDUITS SHALL BE ALLOWED FROM THE BOTTOM OF THE PULL BOX.
3. CONTRACTOR SHALL STACK CONDUITS AS REQUIRED TO MEET THE NEC CODE REQUIREMENTS.
4. PROVIDE BELL ENDS ON ALL CONDUIT.

5 E5.2 B1017 ELECTRICAL VAULT

NOT TO SCALE (FULL TRAFFIC COVER)

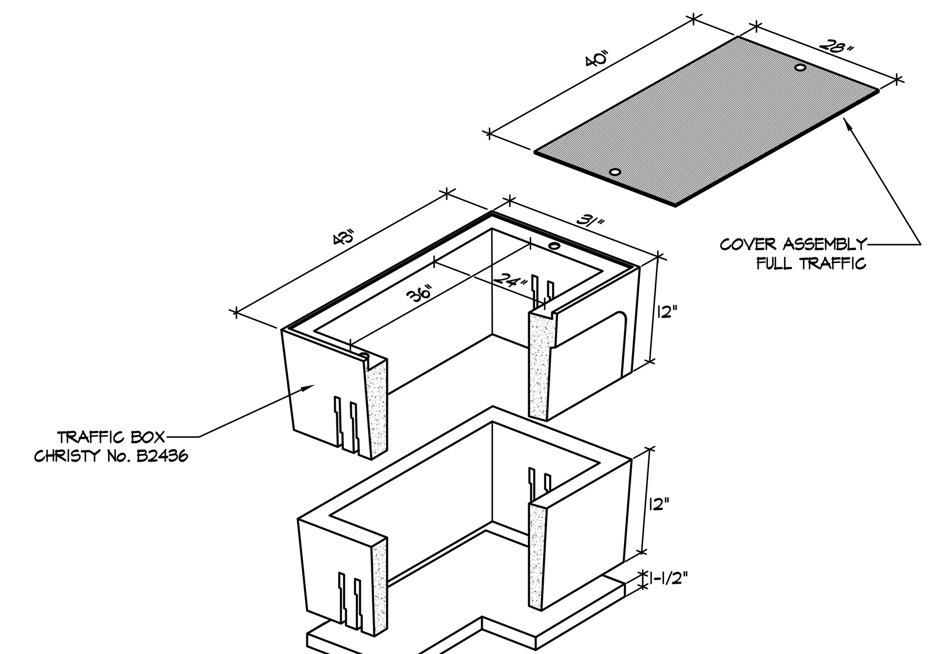

NOTES:

1. HIGH DENSITY REINFORCED CONCRETE BOX WITH NON-SETTING SHOULDERS POSITIONED TO MAINTAIN GRADE AND FACILITATE BACK FILLING. APPROXIMATE DIMENSIONS SHOWN.
2. ALL CONDUITS SHALL ENTER FROM SIDES OF PULL BOX. CONTRACTOR SHALL PROVIDE PULL BOX EXTENSION AS REQUIRED. NO CONDUITS SHALL BE ALLOWED FROM THE BOTTOM OF THE PULL BOX.
3. CONTRACTOR SHALL STACK CONDUITS AS REQUIRED TO MEET THE NEC CODE REQUIREMENTS.
4. PROVIDE BELL ENDS ON ALL CONDUIT.
5. PROVIDE 6" CONCRETE SLURRY AROUND BOX.
6. ALL PENETRATIONS INTO BOXES SHALL BE SEALED WITH GROUT.

6 E5.2 B2436 ELECTRICAL VAULT

SCALE: NOT TO SCALE (FULL TRAFFIC COVER)

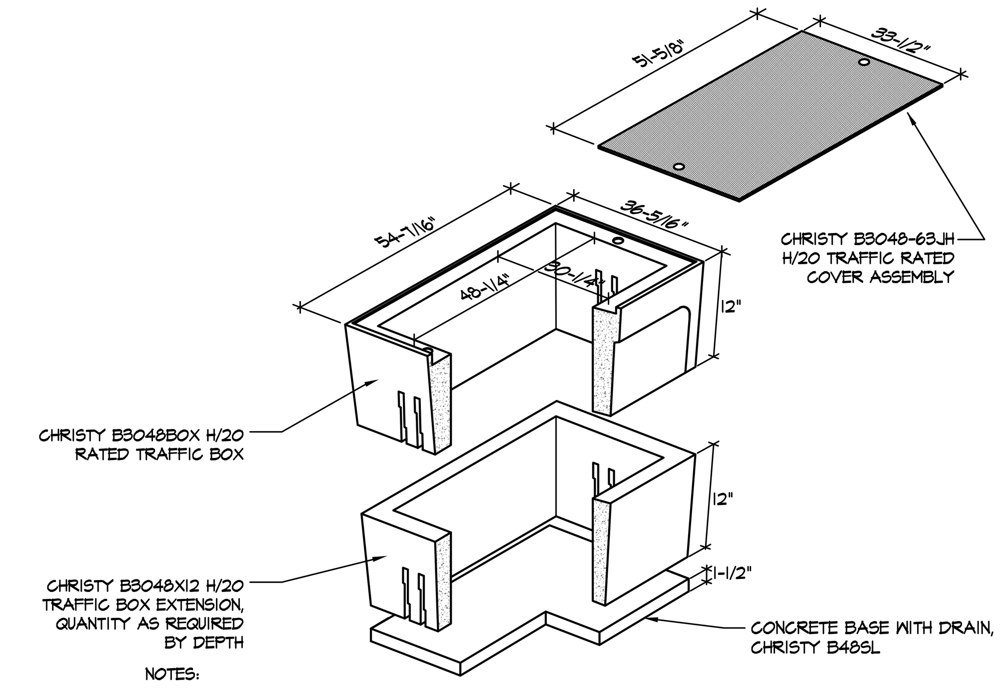

NOTES:

1. HIGH DENSITY REINFORCED CONCRETE BOX WITH NON-SETTING SHOULDERS POSITIONED TO MAINTAIN GRADE AND FACILITATE BACK FILLING. APPROXIMATE DIMENSIONS SHOWN.
2. ALL CONDUITS SHALL ENTER FROM SIDES OF PULL BOX. CONTRACTOR SHALL PROVIDE PULL BOX EXTENSION AS REQUIRED. NO CONDUITS SHALL BE ALLOWED FROM THE BOTTOM OF THE PULL BOX.
3. CONTRACTOR SHALL STACK CONDUITS AS REQUIRED TO MEET THE NEC CODE REQUIREMENTS.
4. PROVIDE BELL ENDS ON ALL CONDUIT.

7 E5.2 B3048 TRAFFIC BOX DETAIL

NOT TO SCALE (FULL TRAFFIC COVER)

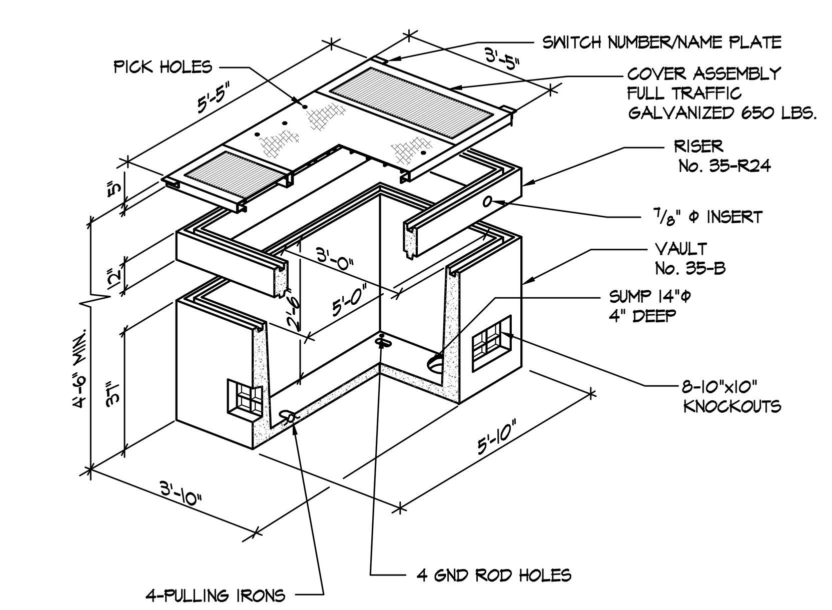

8 E5.2 3' X 5' ELECTRICAL VAULT

NOT TO SCALE (NOT REVIEWED BY DSA) (FULL TRAFFIC COVER)

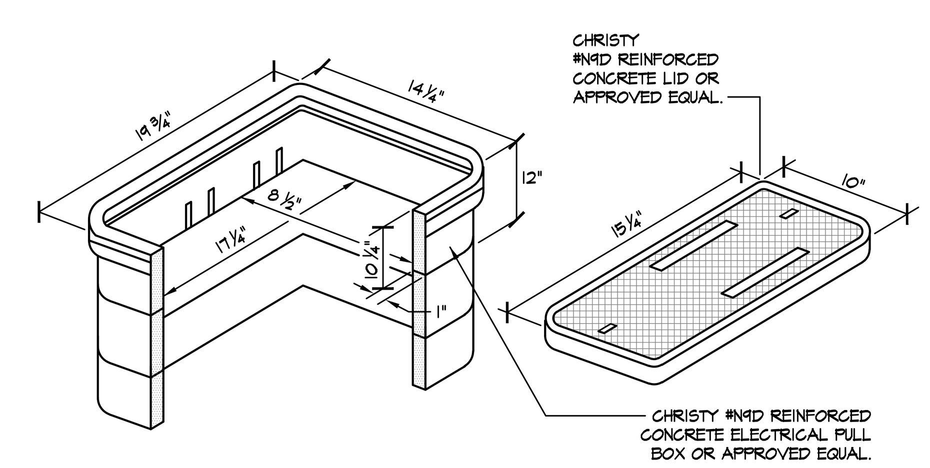

NOTE:

A HIGH DENSITY REINFORCED CONCRETE PULL AND JUNCTION BOX WITH END AND SIDE KNOCKOUTS. NON-SETTLING SHOULDERS MAINTAIN GRADE AND FACILITATE BACK FILLING. APPROXIMATE DIMENSIONS SHOWN.

PROVIDE MINIMUM OF 6" CRUSHED ROCK AT BOTTOM OF BOX FOR DRAINAGE.

ALL CONDUITS SHALL ENTER FROM SIDES OF PULL BOX. CONTRACTOR SHALL PROVIDE PULL BOX EXTENSION AS REQUIRED. NO CONDUITS SHALL BE ALLOWED FROM THE BOTTOM OF THE PULL BOX.

9 E5.2 N9 ELECTRICAL PULLBOX

SCALE: NOT TO SCALE

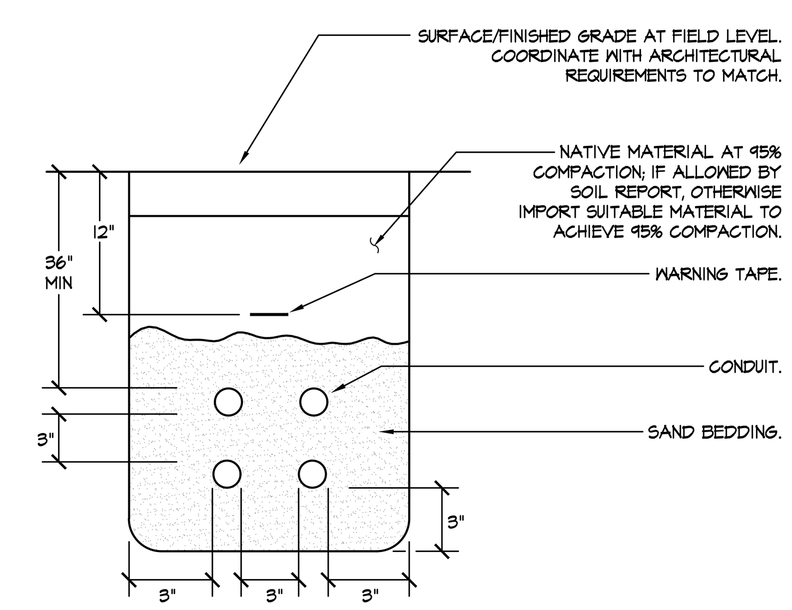

1. COORDINATE TRENCH CONDUIT LAYOUT WITH OTHER CONDUIT SYSTEMS.

10 E5.2 TYPICAL TRENCH DETAIL AT FIELD LEVEL

NOT TO SCALE

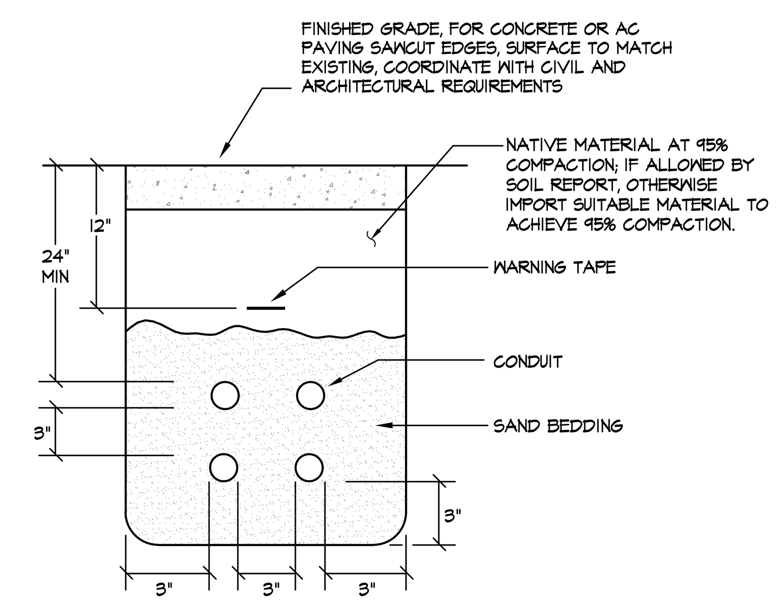

1. COORDINATE TRENCH CONDUIT LAYOUT WITH OTHER CONDUIT SYSTEMS.

11 E5.2 TYPICAL TRENCH DETAIL

SCALE: NOT TO SCALE

VERDE DESIGN
LANDSCAPE ARCHITECTURE
CIVIL ENGINEERING
SPORT PLANNING & DESIGN
2455 The Alameda
Santa Clara, CA 95050
tel: 408.985.7200
fax: 408.985.7260
www.VerdeDesignInc.com

STAMP

REGISTERED PROFESSIONAL ENGINEER
DEVIN CONWAY
No. C-56494
Signature
EXPIRATION DATE: June 30, 2019
STATE OF CALIFORNIA

CONSULTANT

REGISTERED PROFESSIONAL ENGINEER
TAMMY S. FERNANDEZ
E-18890
EXP. 06/30/19
ELECTRICAL
STATE OF CALIFORNIA

American Consulting Engineers Electrical, Inc.
1590 The Alameda, Suite 200
San Jose, CA 95126
JOB # E17151.00
408/236-2312
Fax: 408/236-2316

IDENTIFICATION STAMP
DIV. OF THE STATE ARCHITECT
APPL 01
FILE
AC ______ FLS ______ SS ______
DATE ______
DSA PROJECT TRACKING NO:
XXXX-XX

SHEET TITLE
ELECTRICAL DETAILS

PROJECT NAME
COLLEGE OF MARIN ATHLETIC FACILITIES IMPROVEMENTS

PROJECT ADDRESS
835 COLLEGE AVE.
KENTFIELD, CA
94904

SUBMITTAL	DATE
80% CD SUBMITTAL	06/16/17
100% SUBMITTAL	06/30/17

NO.	REVISIONS	DATE
△		
△		
△		
△		
△		
△		

DRAWN BY	CHECKED BY
	DC
DATE ISSUED 06/30/17	SCALE AS NOTED

PROJ. NO. 1702200

SHEET NO. E5.2

ALL IDEAS, DESIGNS, ARRANGEMENTS, AND PLANS INDICATED OR REPRESENTED BY THIS DRAWING ARE OWNED BY AND THE PROPERTY OF VERDE DESIGN, INC. AND WERE CREATED, EVOLVED, AND DEVELOPED FOR USE ON AND IN CONNECTION WITH THE SPECIFIED PROJECT. NONE OF SUCH IDEAS, DESIGNS, ARRANGEMENTS OR PLANS SHALL BE USED, REPRODUCED, OR PUBLISHED BY ANY METHOD, IN WHOLE OR IN PART, OR DISCLOSED TO ANY PERSON, FIRM, OR CORPORATION FOR ANY PURPOSE WHATSOEVER WITHOUT WRITTEN PERMISSION OF VERDE DESIGN, INC.