COLLEGE OF
MARIN

Organic Farm Classrooms
Project #I21-35617

PROJECT MAUNAL

BID NUMBER: #17/18 MB7

MARIN COMMUNITY COLLEGE DISTRICT

January 24, 2018

Mandatory Conference/Site Walk: Tuesday, February 13, 2018 at 1:30pm
Location: 1800 Ignacio Blvd., Fiscal Services, Bldg. 8, Indian Valley Campus, Novato, CA 94949

Proposal Due Date and Time: Thursday, March 1, 2018 Received by 2:00pm
Location: 1800 Ignacio Blvd., Fiscal Services, Bldg. 8, Indian Valley Campus, Novato, CA 94949

DOCUMENT 00 01 10

TABLE OF CONTENTS

Document 00 01 01	Project Title Page
Document 00 01 10	Table of Contents
Document 00 01 15	List of Drawings and Tables

DIVISION 00 – PROCUREMENT AND CONTRACTING REQUIREMENTS

Document 00 10 00	Notice to Bidders
Document 00 11 00	Instructions to Bidders
Document 00 31 07	Bid Question Form
Document 00 31 19	Existing Conditions
Document 00 31 32	Geotechnical Data
Document 00 41 13	Bid Form and Proposal
Document 00 43 13	Bid Bond
Document 00 43 36	Designated Subcontractors List
Document 00 45 01	Site Visit Certification
Document 00 45 19	Non-Collusion Declaration
Document 00 45 26	Workers' Compensation Certification
Document 00 45 46.03	Drug-Free Workplace Certification
Document 00 45 46.04	Tobacco-Free Environment Certification
Document 00 45 46.05	Hazardous Materials Certification
Document 00 45 46.06	Lead-Based Materials Certification
Document 00 45 46.07	Imported Materials Certification
Document 00 45 46.08	Sex Offender Registration Act Certification
Document 00 45 46.11	Iran Contracting Act Certification
Document 00 45 90	Post Bid Interview
Document 00 51 00	Notice of Award
Document 00 53 00	Agreement
Document 00 55 00	Notice to Proceed
Document 00 56 00	Escrow Bid Documentation
Document 00 57 00	Escrow Agreement in Lieu of Retention
Document 00 61 13.13	Performance Bond
Document 00 61 13.16	Payment Bond
Document 00 65 19.26	Agreement and Release of Any and All Claims
Document 00 65 36	Guarantee Form
Document 00 72 13	General Conditions
Document 00 73 13	Special Conditions
Document 00 73 56	Hazardous Materials Procedures and Requirements
Document 00 91 00	Prevailing Wage and Related Labor Requirements Certification

DIVISION 01 – GENERAL REQUIREMENTS

Document 01 11 00	Summary of Work
Document 01 22 00	Alternates and Unit Pricing
Document 01 25 13	Product Options and Substitutions
Document 01 26 00	Contract Modification Procedures
Document 01 31 19	Project Meetings
Document 01 33 00	Submittals
Document 01 35 13.23	Site Standards

Document 01 41 00	Regulatory Requirements
Document 01 42 13	Abbreviations and Acronyms
Document 01 42 16	Definitions
Document 01 42 19	References
Document 01 43 00	Materials and Equipment
Document 01 45 00	Quality Control
Document 01 50 00	Temporary Facilities and Controls
Document 01 50 13	Construction Waste Management and Disposal
Document 01 52 13	Field Offices
Document 01 64 00	Owner-Furnished Equipment
Document 01 66 00	Product Delivery, Storage and Handling
Document 01 71 23	Field Engineering
Document 01 73 29	Cutting and Patching
Document 01 76 00	Alteration Project Procedures
Document 01 77 00	Contract Closeout and Final Cleaning
Document 01 78 23	Operation and Maintenance Data
Document 01 78 36	Warranties
Document 01 78 39	Record Documents

END OF DOCUMENT TABLE OF CONTENTS FOR PROJECT MANUAL

SPECIFICATION TABLE OF CONTENTS

Section 02 40 00	Demolition
Section 03 20 00	Concrete Reinforcement
Section 03 50 00	Cast-In-Place Concrete
Section 03 30 01	Structural Concrete
Section 05 12 00	Structural Steel
Section 05 31 00	Steel Deck
Section 07 62 00	Sheet Metal Flashing and Trim
Section 09 91 13	Exterior Painting
Section 22 05 00	Plumbing and Utilities
Section 26 00 10	Basic Electrical Requirements
Section 26 05 19	Building Wire and Cable
Section 26 05 26	Grounding and Bonding
Section 26 05 31	Conduit
Section 26 05 33	Boxes
Section 26 05 43	Underground Ducts and Structures
Section 26 05 53	Electrical Identification
Section 26 22 13	Dry Type Transformers
Section 26 24 16	Panelboards
Section 26 27 26	Wiring Devices
Section 26 28 16	Overcurrent Protection Devices
Section 26 56 00	Exterior Lighting
Section 31 10 00	Site Clearing

Section 31 02 00	Earthwork
Section 31 23 33	Trenching and Backfilling
Section 32 11 23	Aggregate Base
Section 32 12 16	Asphaltic Concrete Paving
Section 32 16 13	Concrete Curbs, Gutters, and Walks
Section 32 84 00	Irrigation
Section 32 90 00	Planting
Section 32 91 14	Bioretention Soil
Section 33 11 16	Site Water Distribution System
Section 33 30 00	Sanitary Sewer
Section 33 40 00	Site Drainage System

END OF SECTION TABLE OF CONTENTS FOR PROJECT MANUAL

DOCUMENT 00 01 15

LIST OF DRAWINGS AND TABLES

DRAWINGS

Sheet number	Description
A0.00	Title Sheet – Increment I
A0.01	Index Sheet
A0.02	Calgreen Checklist (DSA)
A0.03	Calgreen Checklist (DSA)
A0.10	Overall Campus Plan
A0.20	Code and Site Analysis
A0.30	Site Accessibility Plan
C1.00	Site Demo Plan
C2.00	Grading and Drainage Plane
C3.00	Utility Plan
C4.00	Civil Details
S1.01	General Notes
S2.01	Concrete Typical Details
S2.02	Concrete Typical Details
S3.01	Metal Deck Details and Notes
A1.00	Overall Site Plan
A1.10	Enlarged Site Plan
A1.11	Site Details
A1.25	Farm Stand Plan, Elevations & Details
A2.01	Foundation and Framing Plan
A2.02	Roof Plan
A2.21	Foundation Details
A2.22	Structure Details
E0.01	Symbols List & Drawing Index
E0.02	Schedules & Riser Diagrams
E0.03	Title 24 Sheets
E1.01	Power & Conduit Site Plan
E1.02	Power & Lighting Plan
E4.01	Details
MP0.11	Mechanical & Plumbing Legend, Schedules & Notes
MP0.21	Mechanical & Plumbing Legend, Schedules & Notes
MP2.11	Site Plan & Enlarged Pantry Plumbing Plan
L1.00	Landscape Plan
L1.11	Landscape Details
L2.00	Irrigation Plan
L2.11	Irrigation Details
L2.20	Hydrozone Plan and Calculations
A0.00	Title Sheet – Increment II
A0.01	Index Sheet
A0.20	Code and Site Analysis
A0.30	Site Accessibility Plan
A1.00	Overall Site Plan

A1.02	Enlarged Site Plan
E3.01	BLDG 1, 2, & 3 Fire Alarm Plan
E3.02	Fire Alarm Schedules, Notes & Details

30' x 31' Thru 150' x 32' Building

TS	Cover Sheet
N1.0	General Notes
N2.0	General Notes
N3.0	Schedules
N4.0	Accessibility Standards Details
N5.0	Multiple Floor Plan Configurations
EN.1	Energy Calculations
EN.2	Energy Calculations
EN.3	Energy Calculations
EN.4	Energy Calculations
EN.5	Energy Calculations
EN.6	Energy Calculations
A1.0	Demonstration Kitchen Floor Plan
A1.0A	Classroom Floor Plan
A2.0	Roof Plan
A2.1	Roof Details
A4.0	Interior Elevations
A4.0A	Interior Elevations
A5.6	Demonstration Kitchen Exterior Elevations Synthetic Stucco Option
A5.6A	Classroom Exterior Elevations Synthetic Stucco Option
A5.7	Architectural Synthetic Stucco Details
A7.2	Miscellaneous Architectural Details
S0.0	Steel Member Properties
S1.1	Concrete Foundation Plan 50 PSF Live Load +15 Partition Load
S1.4	Concrete Foundation Details
S1.5	Concrete Foundations Optional Utility Openings in Footings
S1.6	Concrete Foundation Details
S1.7	Concrete Foundations Optional Utility Openings in Footings
S3.3	Floor Framing Plan and Details Concrete Floor w/3w Deck Option
S4.1	Roof Framing Plan and Details (Enclosed Soffit Options)
S4.2	Roof Framing Details
S5.0	Moment Frame Elevations
S5.1	Moment Frame Connection Details
S6.0	Typical Longitudinal and Transvers Frame Elevation
S8.0	Wall Framing Elevations
S8.1	Wall Framing Elevations
M1.0	Reflective Ceiling/Mechanical Plan
M1.0A	Reflective Ceiling/Mechanical Plan
M1.4	Mechanical Building Sections & Ceiling Details
M1.5	Ceiling and Mechanical Details
M1.6	Mechanical Roof Details
M1.7	Ceiling & Mechanical Notes, Schedules

E1.0	Typical Electrical Plan
E1.0A	Typical Electrical Plan
E1.2	Electrical Notes & Details
P1.0	Plumbing Plans & Fixture Schedule 'A'
P2.0	Plumbing Details and Accessible Details
P3.0	Plumbing Isometrics

24' x 40' Thru 120' x 40' Building

TS	Title Sheet
N1.0	General Notes
N2.0	General Notes
N3.0	Schedules
N4.0	Accessibility Standards Details
N5.0	Multiple Floor Plan Configurations
EN.1	Energy Calculations
EN.2	Energy Calculations
EN.3	Energy Calculations
EN.4	Energy Calculations
EN.5	Energy Calculations
EN.6	Energy Calculations
A1.0	Floor Plan
A2.0	Roof Plan
A2.1	Roof Details
A4.0	Interior Elevations Classrooms
A4.1	Interior Elevations Restrooms
A5.6	Exterior Elevations Synthetic Stucco Option
A5.7	Typ. Architectural Details Synthetic Stucco Option
A7.2	Miscellaneous Architectural Details
S0.0	Steel Member Properties
S1.1	Concrete Foundation Plan 50 PSF Live Load +15 Partition Load
S1.4	Concrete Foundation Details
S1.5	Concrete Foundation Details
S1.6	Concrete Foundation Details
S1.7	Concrete Foundations Optional Utility Openings in Footings
S3.3	Floor Framing Plan and Details Concrete Floor w/3w Deck Option
S4.1	Roof Framing Plan and Details (Enclosed Soffit Options)
S4.2	Roof Framing Details
S5.0	Moment Frame Elevations & Details
S5.1	Moment Frame Connection Details
S6.0	Typical Longitudinal and Transvers Frame Elevation
S8.0	Wood Stud Wall Framing Elevations & Schedules
S8.1	Wood Studs Wall Framing Details
M1.0	Reflective Ceiling Plan
M1.4	Mechanical Building Sections & Ceiling Details
M1.5	Ceiling & Mechanical Details
M1.6	Mechanical Roof Details
M1.7	Ceiling & Mechanical Notes, Schedules

E1.0	Typical Electrical Plan
E1.2	Electrical Notes & Details
P1.0	Plumbing Plan
P2.0	Plumbing Details and Accessible Details
P3.0	Plumbing Isometrics

END OF DOCUMENT

DOCUMENT 00 10 00

NOTICE TO BIDDERS

1. Notice is hereby given that the governing board ("Board") of the Marin Community College District ("District") will receive sealed bids for the following project, Bid No. 17/18 MB7 ("Project" or "Contract"):

Project: I21-35617 – ORGANIC FARM CLASSROOMS

2. The Project consists of:

   Increment I: Site Improvements including utilities, hardscape, landscape, shade structures, and access from parking lot. The successful bidder shall be responsible for all work included in Increment I.

   Increment II: Three Modular Buildings. Two modular buildings house two classrooms each. One modular building provides offices and restrooms. Fire Alarm and signage for buildings, exterior drinking fountain barrier. The successful bidder has limited work for Increment II including fire alarm, and building foundations for modular buildings. Marin Community College District holds the contracts for modular construction.

3. To bid on this Project, the Bidder is required to possess one or more of the following State of California Contractor Licenses:

   A or B

   The Bidder's license(s) must remain active and in good standing throughout the term of the Contract.

4. To bid on this Project, the Bidder is required to be registered as a public works contractor with the Department of Industrial Relations. The Bidder's registration must remain active throughout the term of the Contract.

5. Contract Documents are available on January 24, 2018, for review at the District Fiscal Services Office. In addition, Contract Documents are available for bidders' review at the following builders' exchanges:

   A. Marin Builders Exchange
   B. North Coast Builders Exchange
   C. District Fiscal Services Website: http://fiscal.marin.edu/bids

6. Sealed Bids will be received until **2:00p.m., Thursday March 1, 2018**, at the Marin Community College District Indian Valley Campus, District Fiscal Services Office, Bldg. 8, 1800 Ignacio Blvd., Novato, California, 94949, at or after which time the bids will be opened and publicly read aloud. Any bid that is submitted after this time shall be non-responsive and returned to the bidder. Any claim by a bidder of error in

its bid must be made in compliance with section 5100 et seq. of the Public Contract Code.

7. All bids shall be on the form provided by the District. Each bid must conform and be responsive to all pertinent Contract Documents, including, but not limited to, the Instructions to Bidders.

8. A bid bond by an admitted surety insurer on the form provided by the District, cash, or a cashier's check or a certified check, drawn to the order of the Marin Community College District, in the amount of ten percent (10%) of the total bid price, shall accompany the Bid Form and Proposal, as a guarantee that the Bidder will, within seven (7) calendar days after the date of the Notice of Award, enter into a contract with the District for the performance of the services as stipulated in the bid.

9. A mandatory pre-bid conference and site visit will be held on **Tuesday February 13, 2018, at 1:30 p.m.** at Marin Community College District Indian Valley Campus, District Fiscal Services Office, Bldg. 8, 1800 Ignacio Blvd., Novato, California, 94949. All participants are required to sign in. The site visit is expected to take approximately 1 hour. Failure to attend or tardiness will render bid ineligible.

10. The successful Bidder shall be required to furnish a 100% Performance Bond and a 100% Payment Bond if it is awarded the contract for the Work.

11. The successful Bidder may substitute securities for any monies withheld by the District to ensure performance under the Contract, in accordance with the provisions of section 22300 of the Public Contract Code.

12. The Contractor and all Subcontractors under the Contractor shall pay all workers on all work performed pursuant to this Contract not less than the general prevailing rate of per diem wages and the general prevailing rate for holiday and overtime work as determined by the Director of the Department of Industrial Relations, State of California, for the type of work performed and the locality in which the work is to be performed within the boundaries of the District, pursuant to sections 1770 et seq. of the California Labor Code. Prevailing wage rates are also available from the District or on the Internet at: <http://www.dir.ca.gov>.

13. This Project is subject to labor compliance monitoring and enforcement by the Department of Industrial Relations pursuant to Labor Code section 1771.4 and subject to the requirements of Title 8 of the California Code of Regulations. The Contractor and all Subcontractors under the Contractor shall furnish electronic certified payroll records directly to the Labor Commissioner weekly or within ten (10) days of any request by the District or the Labor Commissioner. The successful Bidder shall comply with all requirements of Division 2, Part 7, Chapter 1, of the Labor Code.

14. The District's Board has found and determined that the following item(s) shall be used on this Project based on the purpose(s) indicated. (Public Contract Code section 3400(c)): A particular material, product, thing, or service is designated by specific brand or trade name for the following purpose(s):

(1) In order to match other products in use on a particular public improvement either completed or in the course of completion:

- Secureall electronic lock door hardware
- Schlage for hard keyed locks
- Primex Clocks
- Delta Controls for Energy Management System (EMS)
- Simplex Fire Alarm Systems
- Honeywell Notifier Alarm Control Panel
- Rain Bird sprinklers, timers and control systems for irrigation

15. The District shall award the Contract, if it awards it at all, to the lowest responsive responsible bidder based on:

    A. The base bid amount only.

16. The Board reserves the right to reject any and all bids and/or waive any irregularity in any bid received. If the District awards the Contract, the security of unsuccessful bidder(s) shall be returned within sixty (60) days from the time the award is made. Unless otherwise required by law, no bidder may withdraw its bid for ninety (90) days after the date of the bid opening.

17. The Engineers Estimate for this project is $1,287,000

END OF DOCUMENT

DOCUMENT 00 11 00

INSTRUCTIONS TO BIDDERS

Contractors shall follow the instructions in this document, and shall submit all documents, forms, and information required for consideration of a Bid.

Marin Community College District ("District") will evaluate information submitted by the apparent low Bidder and, if incomplete or unsatisfactory to District, Bidder's bid may be rejected at the sole discretion of District.

1. Bids are requested for a general construction contract, or work described in general, for the following project ("Project" or "Contract"):

I21-35617 – ORGANIC FARM CLASSROOMS

2. District will receive sealed Bids from Bidders as stipulated in the Notice to Bidders.

3. Bidders must submit Bids on the Bid Form and Proposal and all other required District forms. Bids not submitted on the District's required forms shall be deemed non-responsive and shall not be considered. Additional sheets required to fully respond to requested information are permissible.

4. Bidders must supply all information required by each Bid Document. Bids must be full and complete. District reserves the right in its sole discretion to reject any Bid as non-responsive as a result of any error or omission in the Bid. Bidders must complete and submit all of the following documents with the Bid Form and Proposal:

   a. Bid form and proposal
   b. Bid Bond on the District's form or other security.
   c. Designated Subcontractors List.
   d. Site-Visit Certification
   e. Non-collusion Declaration.
   f. Iran Contracting Act Certification, if contract value is $1,000,000 or more.

   All information or responses of a Bidder in its Bid Proposal and other documents accompanying the Bid Proposal shall be complete, accurate and true. Incomplete, inaccurate or untrue responses or information provided therein by a Bidder shall be grounds for the District to reject such Bidder's Bid Proposal for non-responsiveness.

5. Bidders must submit with their Bids cash, a cashier's check or a certified check payable to District, or a bid bond by an admitted surety insurer of not less than ten percent (10%) of amount of base Bid, plus all additive alternates. If Bidder chooses to provide a Bid Bond as security, Bidder must use the required form of corporate surety provided by District. The Surety on Bidder's Bid Bond must be an insurer admitted in the State of California and authorized to issue surety bonds in the State of California. Bids submitted without necessary bid security will be deemed non-responsive and will not be considered.

7. If Bidder to whom Contract is awarded fails or neglects to enter into Contract and submit required bonds, insurance certificates, and all other required documents, within **SEVEN (7)** calendar days after the date of the Notice of Award, District may deposit Bid Bond, cash, cashier's check, or certified check for collection, and proceeds thereof may be retained by District as liquidated damages for failure of Bidder to enter into Contract, in the sole discretion of District, and may thereupon award the Contract for the Work to the responsible Bidder submitting the next lowest Bid Proposal or may reject all bids and call for new bids, in its sole and exclusive discretion. It is agreed that calculation of damages District may suffer as a result of Bidder's failure to enter into the Contract would be extremely difficult and impractical to determine and that the amount of the Bidder's required bid security shall be the agreed and conclusively presumed amount of damages.

8. Bidders must submit with the Bid the Designated Subcontractors List for those subcontractors who will perform any portion of Work, including labor, rendering of service, or specially fabricating and installing a portion of the Work or improvement according to detailed drawings contained in the plans and specifications, in excess of one half of one percent (0.5%) of total Bid. All of the listed subcontractors are required to be registered as a public works contractor with the Department of Industrial Relations. The subcontractor's registration must remain active throughout the term of the Contract. Failure to submit this list when required by law shall result in Bid being deemed non-responsive and the Bid will not be considered.

    a. An inadvertent error in listing the California contractor license number on the Designated Subcontractors List shall not be grounds for filing a bid protest or grounds for considering the bid nonresponsive if the correct contractor's license number is submitted to the District within 24 hours after the bid opening and the corrected number corresponds with the submitted name and location for that subcontractor.

    b. An inadvertent error listing an unregistered subcontractor shall not be grounds for filing a bid protest or grounds for considering the bid nonresponsive provided that any of the following apply:

        (1) The subcontractor is registered prior to the bid opening.

        (2) The subcontractor is registered and has paid the penalty registration fee within 24 hours after the bid opening.

        (3) The subcontractor is replaced by another registered subcontractor pursuant to Public Contract Code section 4107.

9. If a mandatory pre-bid conference and site visit ("Site Visit") is requested as referenced in the Notice to Bidders, then Bidders must submit the Site-Visit Certification with their Bid. District will transmit to all prospective Bidders of record such Addenda as District in its discretion considers necessary in response to questions arising at the Site Visit. Oral statements shall not be relied upon and will not be binding or legally effective. Addenda issued by the District as a result of the Site Visit, if any, shall constitute the sole and exclusive record and statement of the results of the Site Visit.

10. Bidders shall submit the Noncollusion Declaration with their Bids. Bids submitted without the Noncollusion Declaration shall be deemed non-responsive and will not be considered.

11. Bids shall be clearly written without erasure or deletions. District reserves the right to reject any Bid containing erasures or deletions.

12. Bidders shall not modify the Bid Form and Proposal or qualify their Bids. Bidders shall not submit to the District a scanned, re-typed, word-processed, or otherwise recreated version of the Bid Form and Proposal or other District-provided document.

13. The Bidder and all Subcontractors under the Contractor shall pay all workers on all work performed pursuant to this Contract not less than the general prevailing rate of per diem wages and the general prevailing rate for holiday and overtime work as determined by the Director of the Department of Industrial Relations, State of California, for the type of work performed and the locality in which the work is to be performed within the boundaries of the District, pursuant to sections 1770 et seq. of the California Labor Code. Copies of the general prevailing rates of per diem wages for each craft, classification, or type of worker needed to execute the Contract, as determined by Director of the State of California Department of Industrial Relations, are available upon request at the District's principal office. Prevailing wage rates are also available on the internet at http://www.dir.ca.gov.

14. Submission of Bid signifies careful examination of Contract Documents and complete understanding of the nature, extent, and location of Work to be performed. Bidders must complete the tasks listed below as a condition to bidding, and submission of a Bid shall constitute the Bidder's express representation to District that Bidder has fully completed the following:

    a. Bidder has visited the Site, if required, and has examined thoroughly and understood the nature and extent of the Contract Documents, Work, Site, locality, actual conditions, as-built conditions, and all local conditions and federal, state and local laws, and regulations that in any manner may affect cost, progress, performance, or furnishing of Work or that relate to any aspect of the means, methods, techniques, sequences, or procedures of construction to be employed by Bidder and safety precautions and programs incident thereto;

    b. Bidder has conducted or obtained and has understood all examinations, investigations, explorations, tests, reports, and studies that pertain to the subsurface conditions, as-built conditions, underground facilities, and all other physical conditions at or contiguous to the Site or otherwise that may affect the cost, progress, performance, or furnishing of Work, as Bidder considers necessary for the performance or furnishing of Work at the Contract Sum, within the Contract Time, and in accordance with the other terms and conditions of Contract Documents, including specifically the provisions of the General Conditions; and no additional examinations, investigations,

explorations, tests, reports, studies, or similar information or data are or will be required by Bidder for such purposes;

c. Bidder has correlated its knowledge and the results of all such observations, examinations, investigations, explorations, tests, reports, and studies with the terms and conditions of the Contract Documents;

d. Bidder has given the District prompt written notice of all conflicts, errors, ambiguities, or discrepancies that it has discovered in or among the Contract Documents and the actual conditions, and the written resolution thereof by the District is acceptable to Bidder;

e. Bidder has made a complete disclosure in writing to the District of all facts bearing upon any possible interest, direct or indirect, that Bidder believes any representative of the District or other officer or employee of the District presently has or will have in this Contract or in the performance thereof or in any portion of the profits thereof;

f. Bidder must, prior to bidding, perform the work, investigations, research, and analysis required by this document and that Bidder represented in its Bid Form and Proposal and the Agreement that it performed prior to bidding. Contractor under this Contract is charged with all information and knowledge that a reasonable bidder would ascertain from having performed this required work, investigation, research, and analysis. Bid prices must include entire cost of all work "incidental" to completion of the Work.

g. Conditions Shown on the Contract Documents: Information as to underground conditions, as-built conditions, or other conditions or obstructions, indicated in the Contract Documents, e.g., on Drawings or in Specifications, has been obtained with reasonable care, and has been recorded in good faith. However, District only warrants, and Contractor may only rely, on the accuracy of limited types of information.

(1) As to above-ground conditions or as-built conditions shown or indicated in the Contract Documents, there is no warranty, express or implied, or any representation express or implied, that such information is correctly shown or indicated. This information is verifiable by independent investigation and Contractor is required to make such verification as a condition to bidding. In submitting its Bid, Contractor shall rely on the results of its own independent investigation. In submitting its Bid, Contractor shall not rely on District-supplied information regarding above-ground conditions or as-built conditions.

(2) As to any subsurface condition shown or indicated in the Contract Documents, Contractor may rely only upon the general accuracy of actual reported depths, actual reported character of materials, actual reported soil types, actual reported water conditions, or actual obstructions shown or indicated. District is not responsible for the completeness of such information for bidding or construction; nor is

District responsible in any way for any conclusions or opinions of Contractor drawn from such information; nor is the District responsible for subsurface conditions that are not specifically shown (for example, District is not responsible for soil conditions in areas contiguous to areas where a subsurface condition is shown).

h. Conditions Shown in Reports and Drawings Supplied for Informational Purposes: Reference is made to the document entitled Geotechnical Data, and the document entitled Existing Conditions, for identification of:

(1) Subsurface Conditions: Those reports of explorations and tests of subsurface conditions at or contiguous to the Site that have been utilized by Architect in preparing the Contract Documents; and

(2) Physical Conditions: Those drawings of physical conditions in or relating to existing surface or subsurface structures at or contiguous to the Site that has been utilized by Architect in preparing the Contract Documents.

(3) These reports and drawings are **not** Contract Documents and, except for any "technical" data regarding subsurface conditions specifically identified in Geotechnical Data and Existing Conditions, and underground facilities data, Contractor may not in any manner rely on the information in these reports and drawings. Subject to the foregoing, Contractor must make its own independent investigation of all conditions affecting the Work and must not rely on information provided by District.

15. Any Bidder may withdraw its Bid by either written request actually received by the District prior to the scheduled closing time for the receipt of Bids and the District's public opening and reading of Bids. Bids may not be withdrawn for a period of sixty (60) days after the opening of bids, except as permitted pursuant to Public Contract Code section 5103.

16. Bidders may examine any available "as-built" drawings of previous work by giving District reasonable advance notice. District will not be responsible for accuracy of "as-built" drawings. The document entitled Existing Conditions applies to all supplied "as-built" drawings.

17. All questions about the meaning or intent of the Contract Documents are to be directed in writing to the District. Interpretations or clarifications considered necessary by the District in response to such questions will be issued in writing by Addenda emailed, faxed, mailed, or delivered to all parties recorded by the District as having received the Contract Documents. Questions received less than **THREE (3)** calendar days prior to the date for opening Bids may not be answered. Only questions answered by formal written Addenda will be binding. Oral and other interpretations or clarifications will be without legal effect.

18. Addenda may also be issued to modify other parts of the Contract Documents as deemed advisable by the District.

19. Each Bidder must acknowledge each Addendum in its Bid Form and Proposal by number or its Bid shall be considered non-responsive. Each Addendum shall be part of the Contract Documents. A complete listing of Addenda may be secured from the District.

20. Bids shall be based on products and systems specified in Contract Documents or listed by name in Addenda. Whenever in the Specifications any materials, process, or article is indicated or specified by grade, patent, or proprietary name, or by name of manufacturer, that Specification shall be deemed to be followed by the words "or equal." Bidder may, unless otherwise stated, offer any material, process, or article that shall be substantially equal or better in every respect to that so indicated or specified. The District is not responsible and/or liable in any way for a Contractor's damages and/or claims related, in any way, to that Contractor's basing its bid on any requested substitution that the District has not approved. Contractors and materials suppliers who submit requests for substitutions prior to the award of the Contract must do so in writing and in compliance with Public Contract Code section 3400. All requests must comply with the following:

    a. District must receive any request for substitution a minimum of **TEN (10)** calendar days prior to bid opening.

    b. Within 35 days after the date of the Notice of Award, the Successful Bidder shall submit data substantiating a request for substitution containing sufficient information to assess acceptability of product or system and impact on Project, including, without limitation, the requirements specified in the Special Conditions and the Specifications. Insufficient information shall be grounds for rejection of substitution.

    c. Approved substitutions, if any, shall be listed in Addenda. District reserves the right not to act upon submittals of substitutions until after bid opening.

    d. Substitutions may be requested after Contract has been awarded only if indicated in and in accordance with requirements specified in the Special Conditions and the Specifications.

21. All Bids must be sealed, and marked with name and address of the Bidder and the Project Number, Bid number, Bid package, and time of bid opening. Bids will be received as indicated in the Notice to Bidders.

    a. Mark envelopes with the name of the Project.

    b. Bids must be submitted to the **District Buyer Office, College of Marin Indian Valley Campus, 1800 Ignacio Blvd., Building 8 in AS Room 130, Novato, California, 94949** by date and time shown in the Notice to Bidders.

    c. Bids must contain all documents as required herein.

22. Bids will be opened at or after the time indicated for receipt of bids.

23. This Contract may include alternates. Alternates are defined as alternate products, materials, equipment, systems, methods, or major elements of the construction that may, at the District's option and under terms established in the Contract and pursuant to section 20103.8 of the Public Contract Code, be selected for the Work.

24. The District shall award the Contract, if it awards it at all, to the lowest responsive responsible bidder based on the criteria as indicated in the Notice to Bidders. In the event two or more responsible bidders submit identical bids, the District shall select the Bidder to whom to award the Contract by lot.

25. Time for Completion: District may issue a Notice to Proceed within **THREE (3)** months from the date of the Notice of Award. Once Contractor has received the Notice to Proceed, Contractor shall complete the Work within the period of time indicated in the Contract Documents.

    a. In the event that the District desires to postpone issuing the Notice to Proceed beyond this 3-month period, it is expressly understood that with reasonable notice to the Contractor, the District may postpone issuing the Notice to Proceed.

    b. It is further expressly understood by Contractor that Contractor shall not be entitled to any claim of additional compensation as a result of the postponement of the issuance of the Notice to Proceed beyond a 3-month period. If the Contractor believes that a postponement of issuance of the Notice to Proceed will cause a hardship to the Contractor, the Contractor may terminate the Contract. Contractor's termination due to a postponement beyond this 3-month period shall be by written notice to District within **TEN (10)** calendar days after receipt by Contractor of District's notice of postponement.

    c. It is further understood by the Contractor that in the event that Contractor terminates the Contract as a result of postponement by the District, the District shall only be obligated to pay Contractor for the Work that Contractor had performed at the time of notification of postponement and which the District had in writing authorized Contractor to perform prior to issuing a Notice to Proceed.

    d. Should the Contractor terminate the Contract as a result of a notice of postponement, District shall have the authority to award the Contract to the next lowest responsive responsible bidder.

26. The Bidder to whom Contract is awarded shall execute and submit the following documents by 5:00 p.m. of the **SEVENTH (7th)** calendar day following the date of the Notice of Award. Failure to properly and timely submit these documents entitles District to reject the bid as non-responsive.

    a. Agreement: To be executed by successful Bidder. Submit four (4) copies, each bearing an original signature.

b. Escrow of Bid Documentation: This must include all required documentation. See the document Escrow of Bid Documentation for more information.

c. Performance Bond (100%): On the form provided in the Contract Documents and fully executed as indicated on the form.

d. Payment Bond (100%) (Contractor's Labor and Material Bond): On the form provided in the Contract Documents and fully executed as indicated on the form.

e. Insurance Certificates and Endorsements as required.

f. Workers' Compensation Certification.

g. Prevailing Wage and Related Labor Requirements Certification.

h. Drug-Free Workplace Certification.

i. Tobacco-Free Environment Certification.

j. Hazardous Materials Certification.

k. Lead-Based Paint Certification.

l. Imported Materials Certification.

m. Sex Offender Registration Act Certification

n. Iran Contracting Act Certification. [**IF APPLICABLE]**

27. Any bid protest by any Bidder regarding any other bid must be submitted in writing to the District, before 5:00 p.m. of the **SEVENTH (7TH)** calendar day following bid opening.

a. Only a Bidder who has actually submitted a bid, and who could be awarded the Contract if the bid protest is upheld, is eligible to submit a bid protest. Subcontractors are not eligible to submit bid protests. A Bidder may not rely on the bid protest submitted by another Bidder.

b. A bid protest must contain a complete statement of any and all bases for the protest and all supporting documentation. Materials submitted after the bid protest deadline will not be considered.

c. The protest must refer to the specific portions of all documents that form the basis for the protest.

(1) Without limitation to other bases for protest, an inadvertent error in listing the California contractor license number on the Designated Subcontractors List shall not be grounds for filing a bid protest or grounds for considering the bid nonresponsive if the correct

contractor's license number is submitted to the District within 24 hours after the bid opening and the corrected number corresponds with the submitted name and location for that subcontractor.

(2) Without limitation to other bases for protest, an inadvertent error listing an unregistered subcontractor shall not be grounds for filing a bid protest or grounds for considering the bid nonresponsive provided that any of the following apply:

(i) The subcontractor is registered prior to the bid opening.

(ii) The subcontractor is registered and has paid the penalty registration fee within 24 hours after the bid opening.

(iii) The subcontractor is replaced by another registered subcontractor pursuant to Public Contract Code section 4107.

d. The protest must include the name, address and telephone number of the person representing the protesting party.

e. The party filing the protest must concurrently transmit a copy of the protest and any attached documentation to all other parties with a direct financial interest that may be adversely affected by the outcome of the protest. Such parties shall include all other bidders or proposers who appear to have a reasonable prospect of receiving an award depending upon the outcome of the protest.

f. The procedure and time limits set forth in this paragraph are mandatory and are each bidder's sole and exclusive remedy in the event of bid protest. Failure to comply with these procedures shall constitute a waiver of any right to further pursue the bid protest, including filing a Government Code Claim or legal proceedings.

28. The bid proposals and other documents responding to the bid become the exclusive property of the District upon submittal to the District. At such time as the District issues the Notice of Intent to award the Contract pursuant to the Instructions for Bidders, all bid proposals and other documents submitted in response to the bid become a matter of public record and shall thereupon be considered public records, except for information contained in such bid proposals deemed to be Trade Secrets (as defined in California Civil Code §3426.1) and information provided in response to the District's Pre-Qualification Questionnaire, if applicable. A bidder that indiscriminately marks all or most of its bid proposal as exempt from disclosure as a public record, whether by the notations of "Trade Secret," "Confidential," "Proprietary," or otherwise, may result in render the bid proposal non-responsive and rejected. The District shall not be liable or responsible for the disclosure of such records, including those exempt from disclosure if disclosure is deemed required by law, by an order of a Court of competent jurisdiction, or which occurs through inadvertence, mistake or negligence on the part of the District or its officers, employees or agents. At such time as bid proposals are deemed a matter of public record, pursuant to the above, any bidder or other party shall be afforded access for

inspection and/or copying of such bid proposals, by request made to the District in conformity with the California Access to Public Records Act, California Government Code §§6250 - 6270. If the District is required to defend or otherwise respond to any action or proceeding wherein request is made for the disclosure of the contents of any portion of a bid proposal deemed exempt from disclosure hereunder, the bidder submitting the materials sought by such action or proceeding agrees to defend, indemnify and hold harmless the District in any action or proceeding from and against any liability, including without limitation attorneys' fees arising therefrom. The party submitting materials sought by any other party shall be solely responsible for the cost and defense in any action or proceeding seeking to compel disclosure of such materials; the District's sole involvement in any such action shall be that of a stakeholder, retaining the requested materials until otherwise ordered or directed by a court of competent jurisdiction.

29. District reserves the right to reject any or all bids, including without limitation the right to reject any or all nonconforming, non-responsive, unbalanced, or conditional bids, to re-bid, and to reject the bid of any bidder if District believes that it would not be in the best interest of the District to make an award to that bidder, whether because the bid is not responsive or the bidder is unqualified or of doubtful financial ability or fails to meet any other pertinent standard or criteria established by District. District also reserves the right to waive inconsequential deviations not involving price, time, or changes in the Work. For purposes of this paragraph, an "unbalanced bid" is one having nominal prices for some work items and/or enhanced prices for other work items.

30. Discrepancies between written words and figures, or words and numerals, will be resolved in favor of numerals or figures.

31. Prior to the award of Contract, District reserves the right to consider the responsibility of the Bidder. District may conduct investigations as District deems necessary to assist in the evaluation of any bid and to establish the responsibility, including, without limitation, qualifications and financial ability of Bidders, proposed subcontractors, suppliers, and other persons and organizations to perform and furnish the Work in accordance with the Contract Documents to District's satisfaction within the prescribed time.

END OF DOCUMENT

COLLEGE OF MARIN

Last Date and Time questions can be received is
Date: 02/20/2018 Time: 11:00 A.M.

To: Marin Community College District 1800 Ignacio Blvd Novato, CA 94949	
Attention: Daniel Park	**Email :** dpark@gilbaneco.com **Cc:** mramirez@marin.edu

Bid Package #17/18 – MB7
Organic Farm Classrooms - #I21-35617

Bid Question

From : Company_____ **Attention:**_____	**Date:**_____	**Re:**
Reference Drawing No. _____ Reference Detail(s) :_____	Reference Spec. Section _____ Reference Paragraph(s) :_____	
Question:		

Answer:	
Answered By: _____ Firm:_____	Date: _____

Question Included in Addendum No. _____ to Bid Package No. _____	By: _____ Date:_____

DOCUMENT 00 31 19

EXISTING CONDITIONS

1. Summary

This document describes existing conditions at or near the Project, and use of information available regarding existing conditions. This document is **not** part of the Contract Documents. See General Conditions for definition(s) of terms used herein.

2. Reports and Information on Existing Conditions

a. Documents providing a general description of the Site and conditions of the Work may have been collected by Marin Community College District ("District "), its consultants, contractors, and tenants. These documents may include previous contracts, contract specifications, tenant improvement contracts, as-built drawings, utility drawings, and information regarding underground facilities.

b. Information regarding existing conditions may be inspected at the District offices or the Construction Manager's offices, if any, and copies may be obtained at cost of reproduction and handling upon Bidder's agreement to pay for such copies. These reports, documents, and other information are **not** part of the Contract Documents.

c. Information regarding existing conditions may also be included in the Project Manual, but shall **not** be considered part of the Contract Documents.

d. Prior to commencing this Work, Contractor and the District's representative shall survey the Site to document the condition of the Site. Contractor will record the survey in digital videotape format and provide an electronic copy to the District within fourteen (14) days of the survey.

e. Contractor may also document any pre-existing conditions in writing, provided that both the Contractor and the District's representative agree on said conditions and sign a memorandum documenting the same.

f. The reports and other data or information regarding existing conditions and underground facilities at or contiguous to the Project are the following:

(1) Original Construction Drawings.

3. Use of Information

a. Information regarding existing conditions was obtained only for use of District and its consultants, contractors, and tenants for planning and design and is **not** part of the Contract Documents.

b. District does not warrant, and makes no representation regarding, the accuracy or thoroughness of any information regarding existing conditions. Bidder represents and agrees that in submitting a bid it is not relying on any information regarding existing conditions supplied by District.

c. Under no circumstances shall District be deemed to warrant or represent existing above-ground conditions, as-built conditions, or other actual conditions, verifiable by independent investigation. These conditions are verifiable by Contractor by the performance of its own independent investigation that Contractor must perform as a condition to bidding and Contractor should not and shall not rely on this information or any other information supplied by District regarding existing conditions.

d. Any information shown or indicated in the reports and other data supplied herein with respect to existing underground facilities at or contiguous to the Project may be based upon information and data furnished to District by the District's employees and/or consultants or builders of such underground facilities or others. District does not assume responsibility for the completeness of this information, and Bidder is solely responsible for any interpretation or conclusion drawn from this information.

e. District shall be responsible only for the general accuracy of information regarding underground facilities, and only for those underground facilities that are owned by District, and only where Bidder has conducted the independent investigation required of it pursuant to the Instructions to Bidders, and discrepancies are not apparent.

4. Investigations/Site Examinations

a. Before submitting a Bid, each Bidder is responsible for conducting or obtaining any additional or supplementary examinations, investigations, explorations, tests, studies, and data concerning conditions (surface, subsurface, and underground facilities) at or contiguous to the Site or otherwise, that may affect cost, progress, performance, or furnishing of Work or that relate to any aspect of the means, methods, techniques, sequences, or procedures of construction to be employed by Bidder and safety precautions and programs incident thereto or that Bidder deems necessary to determine its Bid for performing and furnishing the Work in accordance with the time, price, and other terms and conditions of Contract Documents.

b. On request, District will provide each Bidder access to the Site to conduct such examinations, investigations, explorations, tests, and studies, as each Bidder deems necessary for submission of a Bid. Bidders must fill all holes and clean up and restore the Site to its former condition upon completion of its explorations, investigations, tests, and studies. Such investigations and Site examinations may be performed during any and all Site visits indicated in the Notice to Bidders and only under the provisions of the Contract Documents, including, but not limited to, proof of insurance and obligation to indemnify against claims arising from such work, and District’s prior approval.

END OF DOCUMENT

DOCUMENT 00 31 32

GEOTECHNICAL DATA

1. Summary

This document describes geotechnical data at or near the Project that is in the District's possession available for Contractor's review, and use of data resulting from various investigations. This document is **not** part of the Contract Documents. See General Conditions for definition(s) of terms used herein.

2. Geotechnical Reports

a. Geotechnical reports may have been prepared for and around the Site by soil investigation engineers hired by Marin Community College District ("District"), and its consultants, contractors, and tenants.

b. Geotechnical reports may be inspected at the District offices or the Construction Manager's offices, if any, and copies may be obtained at cost of reproduction and handling upon Bidder's agreement to pay for such copies. These reports are **not** part of the Contract Documents.

c. The reports and drawings of physical conditions that may relate to the Project are the following:

Geological Hazards Study dated August 15, 2017

3. Use of Data

a. Geotechnical data were obtained only for use of District and its consultants, contractors, and tenants for planning and design and are **not** a part of Contract Documents.

b. Except as expressly set forth below, District does not warrant, and makes no representation regarding, the accuracy or thoroughness of any geotechnical data. Bidder represents and agrees that in submitting a Bid it is not relying on any geotechnical data supplied by District, except as specifically allowed below.

c. Under no circumstances shall District be deemed to make a warranty or representation of existing above ground conditions, as-built conditions, or other actual conditions verifiable by independent investigation. These conditions are verifiable by Contractor by the performance of its own independent investigation that Contractor should perform as a condition to bidding and Contractor must not and shall not rely on information supplied by District.

4. Limited Reliance Permitted on Certain Information

a. Reference is made herein for identification of:

Reports of explorations and tests of subsurface conditions at or contiguous to the Site that have been utilized by District in preparation of the Contract Documents.

Drawings of physical conditions in or relating to existing subsurface structures (except underground facilities) that are at or contiguous to the Site and have been utilized by District in preparation of the Contract Documents.

b. Bidder may rely upon the general accuracy of the "technical data" contained in the reports and drawings identified above, but only insofar as it relates to subsurface conditions, provided Bidder has conducted the independent investigation required pursuant to Instructions to Bidders, and discrepancies are not apparent. The term "technical data" in the referenced reports and drawings shall be limited as follows:

(1) The term "technical data" shall include actual reported depths, reported quantities, reported soil types, reported soil conditions, and reported material, equipment or structures that were encountered during subsurface exploration. The term "technical data" does not include, and Bidder may not rely upon, any other data, interpretations, opinions or information shown or indicated in such drawings or reports that otherwise relate to subsurface conditions or described structures.

(2) The term "technical data" shall not include the location of underground facilities.

(3) Bidder may not rely on the completeness of reports and drawings for the purposes of bidding or construction. Bidder may rely upon the general accuracy of the "technical data" contained in such reports or drawings.

(4) Bidder is solely responsible for any interpretation or conclusion drawn from any "technical data" or any other data, interpretations, opinions, or information provided in the identified reports and drawings.

5. Investigations/Site Examinations

a. Before submitting a Bid, each Bidder is responsible for conducting or obtaining any additional or supplementary examinations, investigations, explorations, tests, studies, and data concerning conditions (surface, subsurface, and underground facilities) at or contiguous to the Site or otherwise, that may affect cost, progress, performance, or furnishing of Work or that relate to any aspect of the means, methods, techniques, sequences, or procedures of construction to be employed by Bidder and safety precautions and programs incident thereto or that Bidder deems necessary to determine its Bid for performing and furnishing the Work in accordance with the time, price, and other terms and conditions of Contract Documents.

b. On request, District will provide each Bidder access to the Site to conduct such examinations, investigations, explorations, tests, and studies, as each Bidder deems necessary for submission of a Bid. Bidders must fill all holes and clean up and restore the Site to its former condition upon completion of its explorations, investigations, tests, and studies. Such investigations and Site examinations may be performed during any and all Site visits indicated in the Notice to Bidders and only under the provisions of the Contract Documents, including, but not limited to, proof of insurance and obligation to indemnify against claims arising from such work, and District's prior approval.

END OF DOCUMENT

DOCUMENT 00 41 13

BID FORM AND PROPOSAL

To: Governing Board of Marin Community College District ("District" or "Owner")

From: _____
(Proper Name of Bidder)

The undersigned declares that the Contract Documents including, without limitation, the Notice to Bidders and the Instructions to Bidders have been read and agrees and proposes to furnish all necessary labor, materials, and equipment to perform and furnish all work in accordance with the terms and conditions of the Contract Documents, including, without limitation, the Drawings and Specifications of Bid No. 17/18 MB7.

PROJECT: **I21-35617 – ORGANIC FARM CLASSROOMS**

("Project" or "Contract") and will accept in full payment for that Work the following total lump sum amount, all taxes included:

_____	**dollars**	**$** _____
BASE BID		

Twenty Thousand	**dollars**	**$ 20,000**
ALLOWANCE #1		

_____	**dollars**	**$** _____
ALLOWANCE #2		

_____	**dollars**	**$** _____
TOTAL BASE BID INCLUSIVE OF ALLOWANCES		

1. **Allowance #1.** Repair and Relocation of undocumented underground utilities damaged or discovered during site demolition work

2. **Allowance #2.** The Bidder's Base Bid and each alternate shall include a ten percent (10%) allowance for unforeseen items.

   The above allowance(s) shall only be allocated for unforeseen items relating to the Work. Contractor shall not bill for or be due any portion of these allowance(s) unless the District has identified specific work, Contractor has submitted a price for that work or the District has proposed a price for that work, the District has accepted the cost for that work, and the District has prepared a change order incorporating that work. Contractor hereby authorizes the District to execute a unilateral deductive change order at or near the end of the Project for all or any portion of the allowance(s) not allocated.

3. The undersigned has reviewed the Work outlined in the Contract Documents and fully understands the scope of Work required in this Proposal, understands the construction and project management function(s) is described in the Contract Documents, and that each Bidder who is awarded a contract shall be in fact a prime contractor, not a subcontractor, to the District, and agrees that its Proposal, if accepted by the District, will be the basis for the Bidder to enter into a contract with the District in accordance with the intent of the Contract Documents.

4. The undersigned has notified the District in writing of any discrepancies or omissions or of any doubt, questions, or ambiguities about the meaning of any of the Contract Documents, and has contacted the Construction Manager before bid date to verify the issuance of any clarifying Addenda.

5. The undersigned agrees to commence work under this Contract on the date established in the Contract Documents and to complete all work within the time specified in the Contract Documents.

6. The liquidated damages clause of the General Conditions and Agreement is hereby acknowledged.

7. It is understood that the District reserves the right to reject this bid and that the bid shall remain open to acceptance and is irrevocable for a period of ninety (90) days.

8. The following documents are attached hereto:

   - Bid Bond on the District's form or other security
   - Designated Subcontractors List
   - Site-Visit Certification
   - Noncollusion Declaration
   - Iran Contracting Act Certification **[IF CONTRACT VALUE IS $1,000,000 OR MORE]**

9. Receipt and acceptance of the following addenda is hereby acknowledged:

No.___, Dated _____	No.___, Dated _____
No.___, Dated _____	No.___, Dated _____
No.___, Dated _____	No.___, Dated _____

10. Bidder acknowledges that the license required for performance of the Work is a **A or B** license.

11. The undersigned hereby certifies that Bidder is able to furnish labor that can work in harmony with all other elements of labor employed or to be employed on the Work.

12. Bidder specifically acknowledges and understands that if it is awarded the Contract, Bidder will execute and deliver to the District within seven (7) calendar days after notification of award of the Contract the following documents: (a) the Agreement; (b) Certificates of Insurance evidencing all insurance coverages required under the Contract Documents; (c) the Performance Bond; (d) the Labor and Material Payment Bond; (e) the Certificate of Workers' Compensation Insurance; and (f) the certifications listed in Section 28 of the Instructions to Bidders. Failure of the Bidder awarded the Contract to strictly comply with the preceding may result in the District's rescission of the award of the Contract and forfeiture of the Bidder's Bid Security. In such event, the District may, in its sole and exclusive discretion elect to award the Contract to the responsible Bidder submitting the next lowest Bid Proposal, or to reject all Bid Proposals. In addition, Bidder acknowledges and understands that if it is awarded the Contract, that it shall perform the Work of the Project while complying with all requirements of the Department of Industrial Relations [and with all requirements of the Project Stabilization Agreement].

13. The Bidder represents that it is competent, knowledgeable, and has special skills with respect to the nature, extent, and inherent conditions of the Work to be performed. Bidder further acknowledges that there are certain peculiar and inherent conditions existent in the construction of the Work that may create, during the Work, unusual or peculiar unsafe conditions hazardous to persons and property.

14. Bidder expressly acknowledges that it is aware of such peculiar risks and that it has the skill and experience to foresee and to adopt protective measures to adequately and safely perform the Work with respect to such hazards.

15. Bidder expressly acknowledges that it is aware that if a false claim is knowingly submitted (as the terms "claim" and "knowingly" are defined in the California False Claims Act, Cal. Gov. Code, §12650 et seq.), the District will be entitled to civil

remedies set forth in the California False Claim Act. It may also be considered fraud and the Contractor may be subject to criminal prosecution.

16. The undersigned Bidder certifies that it is, at the time of bidding, and shall be throughout the period of the contract, licensed by the State of California to do the type of work required under the terms of the Contract Documents and registered as a public works contractor with the Department of Industrial Relations. Bidder further certifies that it is regularly engaged in the general class and type of work called for in the Contract Documents.

Furthermore, Bidder hereby certifies to the District that all representations, certifications, and statements made by Bidder, as set forth in this bid form, are true and correct and are made under penalty of perjury.

Dated this _____ day of _____ 20 ___

Name of Bidder _____

Type of Organization _____

Signed by _____

Title of Signer _____

Address of Bidder _____

Taxpayer's Identification No. of Bidder _____

Telephone Number _____

Fax Number _____

E-mail _____ Web page _____

Contractor's License No(s): No.: _____ Class: _____ Expiration Date: _____

No.: _____ Class: _____ Expiration Date: _____

No.: _____ Class: _____ Expiration Date: _____

Public Works Contractor Registration No.: _____

If Bidder is a corporation, affix corporate seal.

Name of Corporation: _____

President: _____

Secretary: _____

Treasurer: _____

Manager: _____

END OF DOCUMENT

DOCUMENT 00 43 13

BID BOND

(Note: If Bidder is providing a bid bond as its bid security, Bidder must use this form, NOT a surety company form.)

KNOW ALL PERSONS BY THESE PRESENTS:

That the undersigned, as _____ as Principal ("Principal"),

and _____ as Surety ("Surety"), a corporation organized and existing under and by virtue of the laws of the State of California and authorized to do business as a surety in the State of California, are held and firmly bound unto the Marin Community College District ("District") of County, State of California as Obligee, in the sum of

_____ Dollars ($ _____)

lawful money of the United States of America, for the payment of which sum well and truly to be made, we, and each of us, bind ourselves, our heirs, executors, administrators, successors, and assigns, jointly and severally, firmly by these presents.

THE CONDITION OF THIS OBLIGATION IS SUCH that whereas the Principal has submitted a bid to the District for all Work specifically described in the accompanying bid;

NOW, THEREFORE, if the Principal is awarded the Contract and, within the time and manner required under the Contract Documents, after the prescribed forms are presented to Principal for signature, enters into a written contract, in the prescribed form in accordance with the bid, and files two bonds, one guaranteeing faithful performance and the other guaranteeing payment for labor and materials as required by law, and meets all other conditions to the contract between the Principal and the Obligee becoming effective, or if the Principal shall fully reimburse and save harmless the Obligee from any damage sustained by the Obligee through failure of the Principal to enter into the written contract and to file the required performance and labor and material bonds, and to meet all other conditions to the Contract between the Principal and the Obligee becoming effective, then this obligation shall be null and void; otherwise, it shall be and remain in full force and effect. The full payment of the sum stated above shall be due immediately if Principal fails to execute the Contract within seven (7) days of the date of the District's Notice of Award to Principal.

Surety, for value received, hereby stipulates and agrees that no change, extension of time, alteration or addition to the terms of the Contract or the call for bids, or to the work to be performed thereunder, or the specifications accompanying the same, shall in any way affect its obligation under this bond, and it does hereby waive notice of any such change, extension of time, alteration or addition to the terms of the Contract or the call for bids, or to the work, or to the specifications.

In the event suit is brought upon this bond by the Obligee and judgment is recovered, the Surety shall pay all costs incurred by the Obligee in such suit, including a reasonable attorneys' fee to be fixed by the Court.

If the District awards the bid, the security of unsuccessful bidder(s) shall be returned within sixty (60) days from the time the award is made. Unless otherwise required by law, no bidder may withdraw its bid for ninety (90) days after the date of the bid opening.

IN WITNESS WHEREOF, this instrument has been duty executed by the Principal and Surety above named, on the _____ day of _____, 2017.

(Affix Corporate Seal)

_____
Principal

_____
By

(Affix Corporate Seal)

_____
Surety

_____
By

_____
Name of California Agent of Surety

_____
Address of California Agent of Surety

_____
Telephone Number of California Agent of Surety

Bidder must attach Power of Attorney and Certificate of Authority for Surety and a Notarial Acknowledgment for all Surety's signatures. The California Department of Insurance must authorize the Surety to be an admitted Surety Insurer.

END OF DOCUMENT

DOCUMENT 00 43 36

DESIGNATED SUBCONTRACTORS LIST

(TO BE EXECUTED BY BIDDER AND SUBMITTED WITH BID)

PROJECT: **I21-35617 – ORGANIC FARM CLASSROOMS**

Bidder acknowledges and agrees that under Public Contract Code section 4100, et seq., it must clearly set forth below the name, location and California contractor license number of each subcontractor who will perform work or labor or render service to the Bidder in or about the construction of the Work or who will specially fabricate and install a portion of the Work according to detailed drawings contained in the plans and specifications in an amount in excess of one-half of one percent (0.5%) of Bidder's total Bid and the kind of Work that each will perform. Vendors or suppliers of materials only do not need to be listed.

Bidder acknowledges and agrees that under Public Contract Code section 4100, et seq., if Bidder fails to list as to any portion of Work, or if Bidder lists more than one subcontractor to perform the same portion of Work, Bidder must perform that portion itself or be subjected to penalty under applicable law. In case more than one subcontractor is named for the same kind of Work, state the portion of the kind of Work that each subcontractor will perform.

If alternate bids are called for and Bidder intends to use subcontractors different from or in addition to those subcontractors listed for work under the base Bid, Bidder must list subcontractors that will perform Work in an amount in excess of one half of one percent (0.5%) of Bidder's total Bid, including alternates.

If further space is required for the list of proposed subcontractors, attach additional sheets showing the required information, as indicated below.

Subcontractor Name: _____

CA Cont. Lic. #: _____ Location: _____

Portion of Work: _____

Subcontractor Name: _____

CA Cont. Lic. #: _____ Location: _____

Portion of Work: _____

Subcontractor Name: _____

CA Cont. Lic. #: _____ Location: _____

Portion of Work: _____

Subcontractor Name: _____

CA Cont. Lic. #: _____ Location: _____

Portion of Work: _____

Subcontractor Name: _____

CA Cont. Lic. #: _____ Location: _____

Portion of Work: _____

Subcontractor Name: _____

CA Cont. Lic. #: _____ Location: _____

Portion of Work: _____

Subcontractor Name: _____

CA Cont. Lic. #: _____ Location: _____

Portion of Work: _____

Subcontractor Name: _____

CA Cont. Lic. #: _____ Location: _____

Portion of Work: _____

Subcontractor Name: _____

CA Cont. Lic. #: _____ Location: _____

Portion of Work: _____

Subcontractor Name: _____

CA Cont. Lic. #: _____ Location: _____

Portion of Work: _____

Subcontractor Name: _____

CA Cont. Lic. #: _____ Location: _____

Portion of Work: _____

Date: _____

Proper Name of Bidder: _____

Signature: _____

Print Name: _____

Title: _____

END OF DOCUMENT

DOCUMENT 00 45 01

SITE VISIT CERTIFICATION

TO BE EXECUTED BY BIDDER AND SUBMITTED WITH BID
IF SITE VISIT WAS MANDATORY

PROJECT: **I21-35617 – ORGANIC FARM CLASSROOMS**

Check option that applies:

_____ I certify that I visited the Site of the proposed Work and became fully acquainted with the conditions relating to construction and labor. I fully understand the facilities, difficulties, and restrictions attending the execution of the Work under contract.

_____ I certify that _____ (Bidder's representative) visited the Site of the proposed Work and became fully acquainted with the conditions relating to construction and labor. The Bidder's representative fully understood the facilities, difficulties, and restrictions attending the execution of the Work under contract.

Bidder fully indemnifies the Marin Community College School District, its Architect, its Engineer, its Construction Manager, and all of their respective officers, agents, employees, and consultants from any damage, or omissions, related to conditions that could have been identified during my visit and/or the Bidder's representative's visit to the Site.

I certify under penalty of perjury under the laws of the State of California that the foregoing is true and correct.

Date: _____

Proper Name of Bidder: _____

Signature: _____

Print Name: _____

Title: _____

END OF DOCUMENT

DOCUMENT 00 45 19

NON-COLLUSION DECLARATION
TO BE EXECUTED BY BIDDER AND SUBMITTED WITH BID
Public Contract Code Section 7106

The undersigned declares:

I am the_____ of _____, the party making the foregoing bid.

The bid is not made in the interest of, or on behalf of, any undisclosed person, partnership, company, association, organization, or corporation. The bid is genuine and not collusive or sham. The bidder has not directly or indirectly induced or solicited any other bidder to put in a false or sham bid. The bidder has not directly or indirectly colluded, conspired, connived, or agreed with any bidder or anyone else to put in a sham bid, or to refrain from bidding. The bidder has not in any manner, directly or indirectly, sought by agreement, communication, or conference with anyone to fix the bid price of the bidder or any other bidder, or to fix any overhead, profit, or cost element of the bid price, or of that of any other bidder. All statements contained in the bid are true. The bidder has not, directly or indirectly, submitted his or her bid price or any breakdown thereof, or the contents thereof, or divulged information or data relative thereto, to any corporation, partnership, company, association, organization, bid depository, or to any member or agent thereof, to effectuate a collusive or sham bid, and has not paid, and will not pay, any person or entity for such purpose.

Any person executing this declaration on behalf of a bidder that is a corporation, partnership, joint venture, limited liability company, limited liability partnership, or any other entity, hereby represents that he or she has full power to execute, and does execute, this declaration on behalf of the bidder.

I declare under penalty of perjury under the laws of the State of California that the foregoing is true and correct and that this declaration is executed on _____ _____[date], at _____[city], _____[state].

Date: _____

Proper Name of Bidder: _____

Signature: _____

Print Name: _____

Title: _____

END OF DOCUMENT

DOCUMENT 00 45 26

WORKERS' COMPENSATION CERTIFICATION

PROJECT/CONTRACT NO.: **I21-35617 – ORGANIC FARM CLASSROOMS** between Marin Community College District ("District") and _____ ("Contractor" or "Bidder") ("Contract" or "Project").

Labor Code section 3700, in relevant part, provides:

> Every employer except the State shall secure the payment of compensation in one or more of the following ways:
>
> a. By being insured against liability to pay compensation by one or more insurers duly authorized to write compensation insurance in this state; and/or
>
> b. By securing from the Director of Industrial Relations a certificate of consent to self-insure, which may be given upon furnishing proof satisfactory to the Director of Industrial Relations of ability to self-insure and to pay any compensation that may become due to his employees.

I am aware of the provisions of section 3700 of the Labor Code which require every employer to be insured against liability for workers' compensation or to undertake self-insurance in accordance with the provisions of that code, and I will comply with such provisions before commencing the performance of the Work of this Contract.

Date: _____

Proper Name of Contractor: _____

Signature: _____

Print Name: _____

Title: _____

(In accordance with Article Labor Code sections 1860 and 1861, the above certificate must be signed and filed with the awarding body prior to performing any Work under this Contract.)

END OF DOCUMENT

DOCUMENT 00 45 46.03

DRUG-FREE WORKPLACE CERTIFICATION

PROJECT/CONTRACT NO.: **I21-35617 – ORGANIC FARM CLASSROOMS** between Marin Community College District ("District") and _____ _____ ("Contractor" or "Bidder") ("Contract" or "Project").

This Drug-Free Workplace Certification form is required from the successful Bidder pursuant to Government Code section 8350 et seq., the Drug-Free Workplace Act of 1990. The Drug-Free Workplace Act of 1990 requires that every person or organization awarded a contract or grant for the procurement of any property or service from any state agency must certify that it will provide a drug-free workplace by doing certain specified acts. In addition, the Act provides that each contract or grant awarded by a state agency may be subject to suspension of payments or termination of the contract or grant, and the contractor or grantee may be subject to debarment from future contracting, if the contracting agency determines that specified acts have occurred.

The District is not a "state agency" as defined in the applicable section(s) of the Government Code, but the District is a local agency and public school district under California law and requires all contractors on District projects to comply with the provisions and requirements of Government Code section 8350 et seq., the Drug-Free Workplace Act of 1990.

Contractor shall certify that it will provide a drug-free workplace by doing all of the following:

a. Publishing a statement notifying employees that the unlawful manufacture, distribution, dispensation, possession, or use of a controlled substance is prohibited in the person's or organization's workplace and specifying actions which will be taken against employees for violations of the prohibition.

b. Establishing a drug-free awareness program to inform employees about all of the following:

   (1) The dangers of drug abuse in the workplace.
   (2) The person's or organization's policy of maintaining a drug-free workplace.
   (3) The availability of drug counseling, rehabilitation, and employee-assistance programs.
   (4) The penalties that may be imposed upon employees for drug abuse violations.

c. Requiring that each employee engaged in the performance of the contract or grant be given a copy of the statement required above, and that, as a condition of employment on the contract or grant, the employee agrees to abide by the terms of the statement.

I, the undersigned, agree to fulfill the terms and requirements of Government Code section 8355 listed above and will publish a statement notifying employees concerning (a) the

prohibition of controlled substance at the workplace, (b) establishing a drug-free awareness program, and (c) requiring that each employee engaged in the performance of the Contract be given a copy of the statement required by section 8355(a), and requiring that the employee agree to abide by the terms of that statement.

I also understand that if the District determines that I have either (a) made a false certification herein, or (b) violated this certification by failing to carry out the requirements of section 8355, that the Contract awarded herein is subject to termination, suspension of payments, or both. I further understand that, should I violate the terms of the Drug-Free Workplace Act of 1990, I may be subject to debarment in accordance with the requirements of the aforementioned Act.

I acknowledge that I am aware of the provisions of Government Code section 8350 et seq. and hereby certify that I will adhere to the requirements of the Drug-Free Workplace Act of 1990.

Date: _____

Proper Name of Contractor: _____

Signature: _____

Print Name: _____

Title: _____

END OF DOCUMENT

DOCUMENT 00 45 46.04

TOBACCO-FREE ENVIRONMENT CERTIFICATION

PROJECT/CONTRACT NO.: **I21-35617 – ORGANIC FARM CLASSROOMS** between Marin Community College District ("District") and _____ _____ ("Contractor" or "Bidder") ("Contract" or "Project").

This Tobacco-Free Environment Certification form is required from the successful Bidder.

Pursuant to, without limitation, 20 U.S.C section 6083, Labor Code section 6400 et seq., Health & Safety Code section 104350 et seq. and District Board Policies, all District sites, including the Project site, are tobacco-free environments. Smoking and the use of tobacco products by all persons is prohibited on or in District property. District property includes school buildings, school grounds, school owned vehicles and vehicles owned by others while on District property.

I acknowledge that I am aware of the District's policy regarding tobacco-free environments at District sites, including the Project site and hereby certify that I will adhere to the requirements of that policy and not permit any of my firm's employees, agents, subcontractors, or my firm's subcontractors' employees or agents to use tobacco and/or smoke on the Project site.

Date: _____

Proper Name of Contractor: _____

Signature: _____

Print Name: _____

Title: _____

END OF DOCUMENT

DOCUMENT 00 45 46.05

HAZARDOUS MATERIALS CERTIFICATION

PROJECT/CONTRACT NO.: **I21-35617 – ORGANIC FARM CLASSROOMS** between Marin Community College District ("District") and _____ _____ ("Contractor" or "Bidder") ("Contract" or "Project").

1. Contractor hereby certifies that no Asbestos, or Asbestos-Containing Materials, polychlorinated biphenyl (PCB), or any material listed by the federal or state Environmental Protection Agency or federal or state health agencies as a hazardous material, or any other material defined as being hazardous under federal or state laws, rules, or regulations ("New Hazardous Material"), shall be furnished, installed, or incorporated in any way into the Project or in any tools, devices, clothing, or equipment used to affect any portion of Contractor's work on the Project for District.

2. Contractor further certifies that it has instructed its employees with respect to the above-mentioned standards, hazards, risks, and liabilities.

3. Asbestos and/or asbestos-containing material shall be defined as all items containing fibrous forms of various hydrated minerals, but not limited to chrysotile, crocidolite, amosite, fibrous tremolite, fibrous anthophyllite, and fibrous actinolite. Any or all material containing greater than one-tenth of one percent (0.1%) asbestos by weight shall be defined as asbestos-containing material.

4. Any disputes involving the question of whether or not material is New Hazardous Material shall be settled by electron microscopy or other appropriate and recognized testing procedure, at the District's determination. The costs of any such tests shall be paid by Contractor if the material is found to be New Hazardous Material.

5. All Work or materials found to be New Hazardous Material or Work or material installed with equipment containing "New Hazardous Material" will be immediately rejected and this Work will be removed at Contractor's expense at no additional cost to the District.

6. Contractor has read and understood the document Hazardous Materials Procedures & Requirements, and shall comply with all the provisions outlined therein.

Date: _____

Proper Name of Contractor: _____

Signature: _____

Print Name: _____

Title: _____

END OF DOCUMENT

DOCUMENT 00 45 46.06

LEAD-BASED MATERIALS CERTIFICATION

PROJECT/CONTRACT NO.: **I21-35617 – ORGANIC FARM CLASSROOMS** between Marin Community College District ("District") and _____ _____ ("Contractor" or "Bidder") ("Contract" or "Project").

This certification provides notice to the Contractor that:

(1) Contractor's work may disturb lead-containing building materials.

(2) Contractor shall notify the District if any work may result in the disturbance of lead-containing building materials.

(3) Contractor shall comply with the Renovation, Repair and Painting Rule, if lead-based paint is disturbed in a six-square-foot or greater area indoors or a 20-square-foot or greater area outdoors.

1. Lead as a Health Hazard

Lead poisoning is recognized as a serious environmental health hazard facing children today. Even at low levels of exposure, much lower than previously believed, lead can impair the development of a child's central nervous system, causing learning disabilities, and leading to serious behavioral problems. Lead enters the environment as tiny lead particles and lead dust disburses when paint chips, chalks, peels, wears away over time, or is otherwise disturbed. Ingestion of lead dust is the most common pathway of childhood poisoning; lead dust gets on a child's hands and toys and then into a child's mouth through common hand-to-mouth activity. Exposures may result from construction or remodeling activities that disturb lead paint, from ordinary wear and tear of windows and doors, or from friction on other surfaces.

Ordinary construction and renovation or repainting activities carried out without lead-safe work practices can disturb lead-based paint and create significant hazards. Improper removal practices, such as dry scraping, sanding, or water blasting painted surfaces, are likely to generate high volumes of lead dust.

Because the Contractor and its employees will be providing services for the District, and because the Contractor's work may disturb lead-containing building materials, CONTRACTOR IS HEREBY NOTIFIED of the potential presence of lead-containing materials located within certain buildings utilized by the District. All school buildings built prior to 1978 are presumed to contain some lead-based paint until sampling proves otherwise.

2. Overview of California Law

Education Code section 32240 et seq. is known as the Lead-Safe Schools Protection Act. Under this act, the Department of Health Services is to conduct a sample survey of schools in the State of California for the purpose of developing risk factors to predict lead contamination in public schools. (Ed. Code, § 32241.)

Any school that undertakes any action to abate existing risk factors for lead is required to utilize trained and state-certified contractors, inspectors, and workers. (Ed. Code, § 32243, subd. (b).) Moreover, lead-based paint, lead plumbing, and solders, or other potential sources of lead contamination, shall not be utilized in the construction of any new school facility or the modernization or renovation of any existing school facility. (Ed. Code, § 32244.)

Both the Federal Occupational Safety and Health Administration ("Fed/OSHA") and the California Division of Occupational Safety and Health ("Cal/OSHA") have implemented safety orders applicable to all construction work where a contractor's employee may be occupationally exposed to lead.

The OSHA Regulations apply to all construction work where a contractor's employee may be occupationally exposed to lead. The OSHA Regulations contain specific and detailed requirements imposed on contractors subject to that regulation. The OSHA Regulations define construction work as work for construction, alteration, and/or repair, including painting and decorating. It includes, but is not limited to, the following:

a. Demolition or salvage of structures where lead or materials containing lead are present;

b. Removal or encapsulation of materials containing lead;

c. New construction, alteration, repair, or renovation of structures, substrates, or portions thereof, that contain lead, or materials containing lead;

d. Installation of products containing lead;

e. Lead contamination/emergency cleanup;

f. Transportation, disposal, storage, or containment of lead or materials containing lead on the site or location at which construction activities are performed; and

g. Maintenance operations associated with the construction activities described in the subsection.

Because it is assumed by the District that all painted surfaces (interior as well as exterior) within the District contain some level of lead, it is imperative that the Contractor, its workers and subcontractors fully and adequately comply with all applicable laws, rules and regulations governing lead-based materials (including title 8, California Code of Regulations, section 1532.1).

Contractor shall notify the District if any Work may result in the disturbance of lead-containing building materials. Any and all Work that may result in the disturbance of lead-containing building materials shall be coordinated through the District. A signed copy of this Certification shall be on file prior to beginning Work on the Project, along with all current insurance certificates.

3. Renovation, Repair and Painting Rule, Section 402(c)(3) of the Toxic Substances Control Act

The EPA requires lead safe work practices to reduce exposure to lead hazards created by renovation, repair and painting activities that disturb lead-based paint. Pursuant to the Renovation, Repair and Painting Rule (RRP), renovations in homes, childcare facilities, and schools built prior to 1978 must be conducted by certified renovations firms, using renovators with training by a EPA-accredited training provider, and fully and adequately complying with all applicable laws, rules and regulations governing lead-based materials, including those rules and regulations appearing within title 40 of the Code of Federal Regulations as part 745 (40 CFR 745).

The RRP requirements apply to all contractors who disturb lead-based paint in a six-square-foot or greater area indoors or a 20-square-foot or greater area outdoors. If a DPH-certified inspector or risk assessor determines that a home constructed before 1978 is lead-free, the federal certification is not required for anyone working on that particular building.

4. Contractor's Liability

If the Contractor fails to comply with any applicable laws, rules, or regulations, and that failure results in a site or worker contamination, the Contractor will be held solely responsible for all costs involved in any required corrective actions, and shall defend, indemnify, and hold harmless the District, pursuant to the indemnification provisions of the Contract, for all damages and other claims arising therefrom.

If lead disturbance is anticipated in the Work, only persons with appropriate accreditation, registrations, licenses, and training shall conduct this Work.

It shall be the responsibility of the Contractor to properly dispose of any and all waste products, including, but not limited to, paint chips, any collected residue, or any other visual material that may occur from the prepping of any painted surface. It will be the responsibility of the Contractor to provide the proper disposal of any hazardous waste by a certified hazardous waste hauler. This company shall be registered with the Department of Transportation (DOT) and shall be able to issue a current manifest number upon transporting any hazardous material from any school site within the District.

The Contractor shall provide the District with any sample results prior to beginning Work, during the Work, and after the completion of the Work. The District may request to examine, prior to the commencement of the Work, the lead training records of each employee of the Contractor.

THE CONTRACTOR HEREBY ACKNOWLEDGES, UNDER PENALTY OF PERJURY, THAT IT:

1. HAS RECEIVED NOTIFICATION OF POTENTIAL LEAD-BASED MATERIALS ON THE OWNER'S PROPERTY;

2. IS KNOWLEDGEABLE REGARDING AND WILL COMPLY WITH ALL APPLICABLE LAWS, RULES, AND REGULATIONS GOVERNING WORK WITH, AND DISPOSAL, OF LEAD.

THE UNDERSIGNED WARRANTS THAT HE/SHE HAS THE AUTHORITY TO SIGN ON BEHALF OF AND BIND THE CONTRACTOR. THE DISTRICT MAY REQUIRE PROOF OF SUCH AUTHORITY.

Date: _____

Proper Name of Contractor: _____

Signature: _____

Print Name: _____

Title: _____

END OF DOCUMENT

DOCUMENT 00 45 46.07

IMPORTED MATERIALS CERTIFICATION

PROJECT/CONTRACT NO.: **I21-35617 – ORGANIC FARM CLASSROOMS** between Marin Community College District ("District") and _____ _____ ("Contractor" or "Bidder") ("Contract" or "Project").

This form shall be executed by all entities that, in any way, provide or deliver and/or supply any soils, aggregate, or related materials ("Fill") to the Project Site. All Fill shall satisfy all requirements of any environmental review of the Project performed pursuant to the statutes and guidelines of the California Environmental Quality Act, section 21000 et seq. of the Public Resources Code ("CEQA"), and all requirements of section 17210 et seq. of the Education Code, including requirements for a Phase I environmental assessment acceptable to the State of California Department of Education and Department of Toxic Substances Control.

To the furthest extent permitted by California law, the indemnification provisions in the Contract Documents apply to, without limitation, any claim(s) connected with providing, delivering, and/or supplying Fill.

Certification of:
- □ Delivery Firm/Transporter
- □ Supplier
- □ Manufacturer
- □ Wholesaler
- □ Broker
- □ Retailer
- □ Distributor
- □ Other _____

Type of Entity
- □ Corporation
- □ General Partnership
- □ Limited Partnership
- □ Limited Liability Company
- □ Sole Proprietorship
- □ Other _____

Name of firm ("Firm"): _____

Mailing address: _____

Addresses of branch office used for this Project: _____

If subsidiary, name and address of parent company: _____ _____

_____

_____

By my signature below, I hereby certify that I am aware of section 25260 of the Health and Safety Code and the sections referenced therein regarding the definition of hazardous material. I further certify on behalf of the Firm that all soils, aggregates, or related materials provided, delivered, and/or supplied or that will be provided, delivered, and/or supplied by this Firm to the Project Site are free of any and all hazardous material as defined in section 25260 of the Health and Safety Code. I further certify that I am authorized to make this certification on behalf of the Firm.

Date: _____

Proper Name of Firm: _____

Signature: _____

Print Name: _____

Title: _____

END OF DOCUMENT

DOCUMENT 00 45 46.08

SEX OFFENDER REGISTRATION ACT CERTIFICATION

PROJECT/CONTRACT NO.: **I21-35617 – ORGANIC FARM CLASSROOMS** between the Marin Community College District ("District") and _____ _____ ("Contractor" or "Bidder") ("Contract" or "Project").

This certification provides notice to the Contractor that:

- Penal Code section 290.01 requires every person required to register pursuant to sections 290 to 290.009, inclusive, of the Sex Offender Registration Act who is carrying on a vocation at the community college for more than fourteen (14) days, or for an aggregate period exceeding thirty (30) days in a calendar year, shall, in addition to the registration required by the Sex Offender Registration Act, register with the campus police department within five working days of commencing employment at that community college on a form as may be required by the Department of Justice. The terms "employed or carries on a vocation" include employment whether or not financially compensated, volunteered, or performed for government or educational benefit.

- If the community college has no campus police department, the registrant shall instead register with the police of the city in which the campus is located or the sheriff of the county in which the campus is located if the campus is located in an unincorporated area or in a city that has no police department, on a form as may be required by the Department of Justice.

- The registrant shall also notify the campus police department within five (5) working days of ceasing to be employed, or ceasing to carry on a vocation, at the community college.

Contractor hereby acknowledges, under penalty of perjury, that it is aware of the provisions of section 290.01 of the Penal Code, and it will provide notice of the above provisions to all of its employees, subcontractors, and employees of subcontractors regardless of whether they are designated as employees or acting as independent contractors of the Contractor at least five (5) working days before commencing the performance of the Work of this Contract.
THE UNDERSIGNED WARRANTS THAT HE/SHE HAS THE AUTHORITY TO SIGN ON BEHALF OF AND BIND THE CONTRACTOR. THE DISTRICT MAY REQUIRE PROOF OF SUCH AUTHORITY.

Date: _____

Proper Name of Contractor: _____

Signature: _____

Print Name: _____

Title: _____

END OF DOCUMENT

DOCUMENT 00 45 46.11

IRAN CONTRACTING ACT CERTIFICATION
(Public Contract Code sections 2202-2208)

PROJECT/CONTRACT NO.: **I21-35617 – ORGANIC FARM CLASSROOMS** between Marin Community College District ("District") and _____ _____ ("Contractor" or "Bidder") ("Contract" or "Project").

Prior to bidding on or submitting a proposal for a contract for goods or services of $1,000,000 or more to the District, the Bidder must either: a) certify it is **not** on the current list of persons engaged in investment activities in Iran created by the California Department of General Services ("DGS") pursuant to Public Contract Code section 2203(b) and is not a financial institution extending twenty million dollars ($20,000,000) or more in credit to another person, for 45 days or more, if that other person will use the credit to provide goods or services in the energy sector in Iran and is identified on the current list of persons engaged in investment activities in Iran created by DGS; or b) demonstrate it has been exempted from the certification requirement for that solicitation or contract pursuant to Public Contract Code section 2203(c) or (d).

To comply with this requirement, please insert your vendor or financial institution name and Federal ID Number (if available) and complete **one** of the options below. Please note: California law establishes penalties for providing false certifications, including civil penalties equal to the greater of $250,000 or twice the amount of the contract for which the false certification was made; contract termination; and three-year ineligibility to bid on contracts. (Public Contract Code section 2205.)

OPTION #1 - CERTIFICATION

I, the official named below, certify I am duly authorized to execute this certification on behalf of the vendor/financial institution identified below, and the vendor/financial institution identified below is **not** on the current list of persons engaged in investment activities in Iran created by DGS and is not a financial institution extending twenty million dollars ($20,000,000) or more in credit to another person/vendor, for 45 days or more, if that other person/vendor will use the credit to provide goods or services in the energy sector in Iran and is identified on the current list of persons engaged in investment activities in Iran created by DGS.

Vendor Name/Financial Institution (Printed)	*Federal ID Number (or n/a)*
By (Authorized Signature)	
Printed Name and Title of Person Signing	
Date Executed	*Executed in*

OPTION #2 – EXEMPTION

Pursuant to Public Contract Code sections 2203(c) and (d), a public entity may permit a vendor/financial institution engaged in investment activities in Iran, on a case-by-case basis, to be eligible for, or to bid on, submit a proposal for, or to enter into or to renew, a contract for goods and services.

If you have obtained an exemption from the certification requirement under the Iran Contracting Act, please fill out the information below, and attach documentation demonstrating the exemption approval.

Vendor Name/Financial Institution (Printed)	*Federal ID Number (or n/a)*
By (Authorized Signature)	
Printed Name and Title of Person Signing	*Date Executed*

END OF DOCUMENT

DOCUMENT 00 45 90

POST BID INTERVIEW

PART 1 – GENERAL

1.01 SUMMARY

If requested by the District, this Section requires the apparent low bidder to attend and participate in a Post Bid Interview with the Construction Manager, prior to award of any contract by the District. The Post Bid Interview will be scheduled by the CONSTRUCTION Manager within three (3) calendar days after the date of bid.

1.02 REQUIRED ATTENDANCE

A. Duly authorized representatives of the apparent low bidder are required to attend the Post Bid Interview, in person, and shall bring those members of their team limited to three (3) people who will occupy key positions on the Project such as Project Superintendents, Project Managers, Project Executives so that the District interviews individuals who will work on the Project. The apparent low bidder shall not bring marketing personnel.

B. One authorized representative of the apparent low bidder must have signatory authority on behalf of the apparent low bidder.

C. Failure to attend the Post Bid Interview will be considered just cause for the District to reject the Bid.

1.03 POST BID INTERVIEW PROCEDURE

A. The Construction Manager will review the Bid with the attendees.

B. The Construction Manager will review the Contract Documents with the attendees, including but not limited to:

(1) Insurance

(2) Bonding

(3) Addenda

(4) Pre-Bid Clarifications

(5) Scope of Work

(6) Bid Packages Descriptions

(7) Bid Alternates

(8) The Contract Plans

SAMPLE

(9) The Contract Specifications

(10) The Project Schedule and Schedule Requirements

(11) Critical Dates Requirement for Other Bid Packages

(12) Prevailing Wage Requirements

(13) Liquidated Damages

(14) Required Documentation for Contract Administration

(15) Contract Coordination Requirements

1.04 POST BID INTERVIEW DOCUMENTATION

The Construction Manager will document the Post Bid Interview on the form attached to this Section. Both the Apparent Low Bidder and the Construction Manager are required to sign the Post Bid Interview Documentation.

SAMPLE

POST BID INTERVIEW

CONSTRUCTION MANAGER
Daniel Park
Gilbane Building Company
1800 Ignacio Blvd.
Novato, CA 94949
415-883-2211 ext. 8141

BIDDER: _____

DATE: _____ TIME: _____ PHONE # _____

I. INTRODUCTIONS:

A. Present _____ _____
CONTRACTOR CONTRACTOR
_____ _____
_____ _____
[CM] [CM]

II. PROPOSED CONTRACT: _____

III. PURPOSE OF INTERVIEW IS TO ASSURE:

A.	Do you acknowledge submission of a complete and accurate bid?	Yes	No
B.	Do you acknowledge the Bid Document submittal timelines after NOA and NTP and can you meet those timelines?	Yes	No
C.	Do you acknowledge the requirements for the escrow of bid documents?	Yes	No
D.	Do you acknowledge and understand the Project is subject to a Project Stabilization Agreement? (if applicable)	Yes	No

IV. CONTRACTUAL REQUIREMENTS:

A.	Do you understand you are a prime contractor?	Yes	No
B.	Can you meet specified insurance requirements?	Yes	No
1.	Does any of your policies that require Additional Insured endorsements exceed the minimum coverage requirements?	Yes	No
2.	Are you requesting that the District accept an Umbrella or		

SAMPLE

Excess Liability Insurance Policy to meet the policy limit? Yes No

3. Will there be a gap between the per occurrence amount of any underlying policy and the start of the coverage under the Umbrella or Excess Liability Insurance Policy? Yes No

C. Will you provide the Performance, and a Labor and Material Bond for 100% of the Contract Price as stipulated? Yes No

1. Cost for bond: _____%

2. Is the cost of your bond in your base bid? Yes No

3. Is your surety licensed is issue bonds in California? Yes No

D. Do you understand and agree the Bid requires liquidated damages? Yes No

V. SCOPE OF WORK:

A. Acknowledged Receipt of Addenda #1-__ Yes No

B. Are the costs for addenda items included in your bid? (if applicable) Yes No

C. Do you have a complete understanding of your Scope of Work under the proposed Agreement? Yes No

D. You have re-reviewed the documents and understand the Scope of the Work. Are there any items that require clarification? Yes No

If yes, please identify them.

1. _____

_____

2. _____

_____

3. _____

_____

4. _____

_____

5. _____

_____

SAMPLE

Is (are) the cost(s) for above items? Yes No

C. Review bid alternative (if applicable) #1-___

D. Are the plans and specifications clear and understandable to your satisfaction? Yes No

VI. SCHEDULE:

A. Do you acknowledge and agree to the stipulated completion dates and milestones in the contract? Yes No

1. Will you provide a detailed construction schedule to _____ within the required ten (10) days, per the contract? Yes No

2. It is understood that the Project schedule is critical and that that weekend and overtime work may be required to meet the milestones. Yes No

3. It is understood that if rain does occur, then all dewatering and And protection of work is required, per the contract. Yes No

If not, what must change and why? _____

_____

_____

B. Indentify critical materials, deliveries, long lead items and other dependencies, including Owner Furnished items that could affect the completion of your work.

1. _____

2. _____

3. _____

4. _____

5. _____

VII. CONTRACTOR COMMENTS/SUGGESTIONS:

1. _____

2. _____

3. _____

SAMPLE

4. _____

5. _____

VIII. CONTRACTOR

You agree the information contained herein is part of your contractual obligations. Your signature acknowledges your agreement to perform all Work in the Contract Documents, and that costs for all Work are included in your bid.

The foregoing information is true and accurate, and I am authorized to sign as an officer of the company I am representing.

[Company Name]

_____

Signature _____ Title: _____

Date: _____

IX. CONSTRUCTION MANAGER

Signature _____ Title: _____

Date: _____

Title of Document: POST BID INTERVIEW
Number of Pages: _____
Date of Document: _____

END OF DOCUMENT

SAMPLE

DOCUMENT 00 51 00

NOTICE OF AWARD

Dated: _____ 20___

To: _____
(Contractor)

To: _____
(Address)

From: Governing Board ("Board") of Marin Community College District ("District" or "Owner")

PROJECT: **I21-35617 – ORGANIC FARM CLASSROOMS**

("Project" or "Contract").

Contractor has been awarded the referenced Contract on _____, 20___,

by action of the District's Board

The Contract Price is _____ Dollars ($_____)

One (1) copy of each of the Contract Documents including Drawings accompany this Notice of Award. Additional electronic sets of the Drawings will be available separately.

You must comply with the following conditions precedent within **SEVEN (7)** calendar days of the date of this Notice of Award.

The Bidder to whom Contract is awarded shall execute and submit the following documents by 5:00 p.m. of the **SEVENTH (7th)** calendar day following the date of the Notice of Award.

a. Agreement: To be executed by successful Bidder. Submit four (4) copies, each bearing an original signature.

b. Escrow of Bid Documentation: This must include all required documentation. See the document Escrow of Bid Documentation for more information.

c. Performance Bond (100%): On the form provided in the Contract Documents and fully executed as indicated on the form.

d. Payment Bond (Contractor's Labor & Material Bond) (100%): On the form provided in the Contract Documents and fully executed as indicated on the form.

e. Insurance Certificates and Endorsements as required.

f. Workers' Compensation Certification.

SAMPLE

g. Prevailing Wage and Related Labor Requirements Certification.

h. Drug-Free Workplace Certification.

i. Tobacco-Free Environment Certification.

j. Hazardous Materials Certification.

k. Lead-Based Materials Certification.

l. Imported Materials Certification.

m. Business Enterprise Declaration

n. W-9

Failure to comply with these conditions within the time specified will entitle District to consider your bid abandoned, to annul this Notice of Award, and to declare your Bid Security forfeited, as well as any other rights the District may have against the Contractor.

After you comply with those conditions, District will return to you one fully signed counterpart of the Agreement.

MARIN COMMUNITY COLLEGE SCHOOL DISTRICT

BY: _____

NAME: _____

TITLE: _____

END OF DOCUMENT

SAMPLE

DOCUMENT 00 53 00

AGREEMENT

THIS AGREEMENT IS MADE AND ENTERED INTO THIS _____ DAY OF _____ _____, 20___, by and between the Marin Community College District ("District") and _____ _____ ("Contractor") ("Agreement").

WITNESSETH: That the parties hereto have mutually covenanted and agreed, and by these presents do covenant and agree with each other, as follows:

1. The Work: Contractor agrees to furnish all tools, equipment, apparatus, facilities, labor, and material necessary to perform and complete in a good and workmanlike manner, the work of the following project:

PROJECT: **I21-35617 – ORGANIC FARM CLASSROOMS**

("Project" or "Contract" or "Work")

It is understood and agreed that the Work shall be performed and completed as required in the Contract Documents including, without limitation, the Drawings and Specifications and submission of all documents required to secure funding or by the Division of the State Architect for close-out of the Project, under the direction and supervision of, and subject to the approval of, the District or its authorized representative.

2. The Contract Documents: The complete Contract consists of all Contract Documents as defined in the General Conditions and incorporated herein by this reference. Any and all obligations of the District and Contractor are fully set forth and described in the Contract Documents. All Contract Documents are intended to cooperate so that any Work called for in one and not mentioned in the other or vice versa is to be executed the same as if mentioned in all Contract Documents.

3. Interpretation of Contract Documents: Should any question arise concerning the intent or meaning of Contract Documents, including the Drawings or Specifications, the question shall be submitted to the District for interpretation. If a conflict exists in the Contract Documents, modifications, beginning with the most recent, shall control over this Agreement (if any), which shall control over the Special Conditions, which shall control over any Supplemental Conditions, which shall control over the General Conditions, which shall control over the remaining Division 0 documents, which shall control over Division 1 Documents which shall control over Division 2 through Division 18 documents, which shall control over figured dimensions, which shall control over large-scale drawings, which shall control over small-scale drawings. In no case shall a document calling for lower quality and/or quantity material or workmanship control. The decision of the District in the matter shall be final.

4. Time for Completion: It is hereby understood and agreed that the work under this contract shall be completed within One Hundred Thirty One(131) consecutive

SAMPLE

calendar days ("Contract Time") from the date specified in the District's Notice to Proceed.

5. **Completion-Extension of Time**: Should the Contractor fail to complete this Contract, and the Work provided herein, within the time fixed for completion, due allowance being made for the contingencies provided for herein, the Contractor shall become liable to the District for all loss and damage that the District may suffer on account thereof. The Contractor shall coordinate its work with the Work of all other contractors. The District shall not be liable for delays resulting from Contractor's failure to coordinate its Work with other contractors in a manner that will allow timely completion of Contractor's Work. Contractor shall be liable for delays to other contractors caused by Contractor's failure to coordinate its Work with the work of other contractors.

6. **Liquidated Damages**: Time is of the essence for all work under this Agreement. It is hereby understood and agreed that it is and will be difficult and/or impossible to ascertain and determine the actual damage that the District will sustain in the event of and by reason of Contractor's delay; therefore, Contractor agrees that it shall pay to the District the sum of **One Thousand** dollars (**$1,000.00/DAY**) per day as liquidated damages for each and every day's delay beyond the time herein prescribed in finishing the Work.

It is hereby understood and agreed that this amount is not a penalty.

In the event that any portion of the liquidated damages is not paid to the District, the District may deduct that amount from any money due or that may become due the Contractor under this Agreement. The District's right to assess liquidated damages is as indicated herein and in the General Conditions.

The time during which the Contract is delayed for cause as hereinafter specified may extend the time of completion for a reasonable time as the District may grant. This provision does not exclude the recovery of damages for delay by either party under other provisions in the Contract Documents.

7. **Loss Or Damage**: The District and its authorized representatives shall not in any way or manner be answerable or suffer loss, damage, expense, or liability for any loss or damage that may happen to the Work, or any part thereof, or in or about the same during its construction and before acceptance, and the Contractor shall assume all liabilities of every kind or nature arising from the Work, either by accident, negligence, theft, vandalism, or any cause whatever; and shall hold the District and its authorized representatives harmless from all liability of every kind and nature arising from accident, negligence, or any cause whatever.

8. **Insurance and Bonds**: Before commencing the Work, Contractor shall provide all required certificates of insurance, and payment and performance bonds as evidence thereof.

9. **Prosecution of Work**: If the Contractor should neglect to prosecute the Work properly or fail to perform any provisions of this contract, the District, may, pursuant

to the General Conditions and without prejudice to any other remedy it may have, make good such deficiencies and may deduct the cost thereof from the payment then or thereafter due the Contractor.

10. **Authority of Architect, Project Inspector, and DSA**: Contractor hereby acknowledges that the Architect(s), the Project Inspector(s), and the Division of the State Architect have authority to approve and/or stop Work if the Contractor's Work does not comply with the requirements of the Contract Documents, Title 24 of the California Code of Regulations, and all applicable laws. The Contractor shall be liable for any delay caused by its non-compliant Work.

11. **Assignment of Contract**: Neither the Contract, nor any part thereof, nor any moneys due or to become due thereunder, may be assigned by the Contractor without the written approval of the District, nor without the written consent of the Surety on the Contractor's Performance Bond (the "Surety"), unless the Surety has waived in writing its right to notice of assignment.

12. **Classification of Contractor's License**: Contractor hereby acknowledges that it currently holds valid Type _____ Contractor's license(s) issued by the State of California, Contractor's State Licensing Board, in accordance with division 3, chapter 9, of the Business and Professions Code and in the classification called for in the Contract Documents.

13. **Registration as Public Works Contractor**: The Contractor and all Subcontractors currently are registered as public works contractors with the Department of Industrial Relations, State of California, in accordance with Labor Code section 1771.4.

14. **Payment of Prevailing Wages**: The Contractor and all Subcontractors shall pay all workers on all Work performed pursuant to this Contract not less than the general prevailing rate of per diem wages and the general prevailing rate for holiday and overtime work as determined by the Director of the Department of Industrial Relations, State of California, for the type of work performed and the locality in which the work is to be performed within the boundaries of the District, pursuant to sections 1770 et seq. of the California Labor Code.

15. This Project is subject to labor compliance monitoring and enforcement by the Department of Industrial Relations pursuant to Labor Code section 1771.4 and Title 8 of the California Code of Regulations. Contractor specifically acknowledges and understands that it shall perform the Work of this Agreement while complying with all the applicable provisions of Division 2, Part 7, Chapter 1, of the Labor Code, including, without limitation, the requirement that the Contractor and all of its Subcontractors shall timely submit complete and accurate electronic certified payroll records as required by the Contract Documents, or the District may not issue payment.

16. **Contract Price**: In consideration of the foregoing covenants, promises, and agreements on the part of the Contractor, and the strict and literal fulfillment of each and every covenant, promise, and agreement, and as compensation agreed upon for the Work and construction, erection, and completion as aforesaid, the District

SAMPLE

covenants, promises, and agrees that it will well and truly pay and cause to be paid to the Contractor in full, and as the full Contract Price and compensation for construction, erection, and completion of the Work hereinabove agreed to be performed by the Contractor, the following price:

_____ Dollars

($ _____),

in lawful money of the United States, which sum is to be paid according to the schedule provided by the Contractor and accepted by the District and subject to additions and deductions as provided in the Contract. This amount supersedes any previously stated and/or agreed to amount(s).

17. Severability: If any term, covenant, condition, or provision in any of the Contract Documents is held by a court of competent jurisdiction to be invalid, void or unenforceable, the remainder of the provisions in the Contract Documents shall remain in full force and effect and shall in no way be affected, impaired, or invalidated thereby.

18. Authority to Execute: The individual(s) executing this Agreement on behalf of the Contractor is/are duly and fully authorized to execute this Agreement on behalf of Contractor and to bind the Contractor to each and every term, condition and covenant of the Contract Documents.

IN WITNESS WHEREOF, accepted and agreed on the date indicated above:

CONTRACTOR	**DISTRICT**
_____	MARIN COMMUNITY COLLEGE DISTRICT
By: _____	By: _____
Title: _____	Title: _____

NOTE: If the party executing this Contract is a corporation, a certified copy of the by-laws, or of the resolution of the Board of Directors, authorizing the officers of said corporation to execute the Contract and the bonds required thereby must be attached hereto.

END OF DOCUMENT

SAMPLE

DOCUMENT 00 55 00

NOTICE TO PROCEED

Dated: _____, 20___

TO: _____
("Contractor")

ADDRESS: _____

_____

_____

PROJECT: **I21-35617 – ORGANIC FARM CLASSROOMS**

between the Marin Community College District and Contractor ("Contract").

You are notified that the Contract Time under the above Contract will commence to run on _____, 20___. By that date, you are to start performing your obligations under the Contract Documents. In accordance with the Agreement executed by Contractor, the date of completion is _____, 20___.

You must submit the following documents by 5:00 p.m. of the **(TENTH (10th))** calendar day following the date of this Notice to Proceed:

a. Contractor's preliminary schedule of construction.

b. Contractor's preliminary schedule of values for all of the Work.

c. Contractor's preliminary schedule of submittals, including Shop Drawings, Product Data, and Samples submittals

d. Contractor's Safety Plan specifically adapted for the Project.

e. A complete subcontractors list, including the name, address, telephone number, facsimile number, California State Contractors License number, classification, and monetary value of all Subcontracts.

Thank you. We look forward to a very successful Project.

MARIN COMMUNITY COLLEGE DISTRICT

BY: _____

SAMPLE

NAME: _____

TITLE: _____

END OF DOCUMENT

SAMPLE

DOCUMENT 00 56 00

ESCROW BID DOCUMENTATION

1. Requirement to Escrow Bid Documentation

a. Contractor shall submit, within **SEVEN (7)** calendar days after the date of the Notice of Award, one copy of all documentary information received or generated by Contractor in preparation of bid prices for this Contract, as specified herein. This material is referred to herein as "Escrow Bid Documentation." The Escrow Bid Documentation of the Contractor will be held in escrow for the duration of the Contract.

b. Contractor agrees, as a condition of award of the Contract, that the Escrow Bid Documentation constitutes all written information used in the preparation of its bid, and that no other written bid preparation information shall be considered in resolving disputes or claims. Contractor also agrees that nothing in the Escrow Bid Documentation shall change or modify the terms or conditions of the Contract Documents.

c. The Escrow Bid Documentation will not be opened by District except as indicated herein. The Escrow Bid Documentation will be used only for the resolution of change orders and claims disputes.

d. Contractor's submission of the Escrow Bid Documentation, as with the bonds and insurance documents required, is considered an essential part of the Contract award. Should the Contractor fail to make the submission within the allowed time specified above, District may deem the Contractor to have failed to enter into the Contract, and the Contractor shall forfeit the amount of its bid security, accompanying the Contractor's bid, and District may award the Contract to the next lowest responsive responsible bidder.

e. NO PAYMENTS WILL BE MADE, NOR WILL DISTRICT ACCEPT PROPOSED CHANGE ORDERS UNTIL THE ABOVE REQUIRED INFORMATION IS SUBMITTED AND APPROVED.

f. The Escrow Bid Documentation shall be submitted in person by an authorized representative of the Contractor to the District.

2. Ownership of Escrow Bid Documentation

a. The Escrow Bid Documentation is, and shall always remain, the property of Contractor, subject to review by District, as provided herein.

b. Escrow Bid Documentation constitute trade secrets, not known outside Contractor's business, known only to a limited extent and only by a limited number of employees of Contractor, safeguarded while in Contractor's possession, extremely valuable to Contractor, and could be extremely valuable to Contractor's competitors by virtue of it reflecting Contractor's

contemplated techniques of construction. Subject to the provisions herein, District agrees to safeguard the Escrow Bid Documentation, and all information contained therein, against disclosure to the fullest extent permitted by law.

3. Format and Contents of Escrow Bid Documentation

a. Contractor may submit Escrow Bid Documentation in its usual cost-estimating format; a standard format is not required. The Escrow Bid Documentation shall be submitted in the language (e.g., English) of the specification.

b. Escrow Bid Documentation must clearly itemize the estimated costs of performing the work of each bid item contained in the bid schedule, separating bid items into sub-items as required to present a detailed cost estimate and allow a detailed cost review. The Escrow Bid Documentation shall include all subcontractor bids or quotes, supplier bids or quotes, quantity takeoffs, crews, equipment, calculations of rates of production and progress, copies of quotes from subcontractors and suppliers, and memoranda, narratives, add/deduct sheets, and all other information used by the Contractor to arrive at the prices contained in the bid proposal. Estimated costs should be broken down into Contractor's usual estimate categories such as direct labor, repair labor, equipment ownership and operation, expendable materials, permanent materials, and subcontract costs as appropriate. Plant and equipment and indirect costs should be detailed in the Contractor's usual format. The Contractor's allocation of indirect costs, contingencies, markup, and other items to each bid item shall be identified.

c. All costs shall be identified. For bid items amounting to less than $10,000, estimated unit costs are acceptable without a detailed cost estimate, provided that labor, equipment, materials, and subcontracts, as applicable, are included and provided that indirect costs, contingencies, and markup, as applicable, are allocated.

d. Bid Documentation provided by District should not be included in the Escrow Bid Documentation unless needed to comply with the following requirements.

4. Submittal of Escrow Bid Documentation

a. The Escrow Bid Documentation shall be submitted by the Contractor in a sealed container within **SEVEN (7)** calendar days after the date of the Notice of Award. The container shall be clearly marked on the outside with the Contractor's name, date of submittal, project name and the words "Escrow Bid Documentation – Intended to be opened in the presence of Authorized Representatives of Both District and Contractor".

b. By submitting Escrow Bid Documentation, Contractor represents that the material in the Escrow Bid Documentation constitutes all the documentary information used in preparation of the bid and that the Contractor has personally examined the contents of the Escrow Bid Documentation container and has found that the documents in the container are complete.

c. If Contractor's proposal is based upon subcontracting any part of the work, each subcontractor whose total subcontract price exceeds 5 percent of the total contract price proposed by Contractor, shall provide separate Escrow Documents to be included with those of Contractor. Those documents shall be opened and examined in the same manner and at the same time as the examination described above for Contractor.

d. If Contractor wishes to subcontract any portion of the Work after award, District retains the right to require Contractor to submit Escrow Documents for the Subcontractor before the subcontract is approved.

5. Storage, Examination and Final Disposition of Escrow Bid Documentation

a. The Escrow Bid Documentation will be placed in escrow, for the life of the Contract, in a mutually agreeable institution. The cost of storage will be paid by Contractor for the duration of the project until final Contract payment. The storage facilities shall be the appropriate size for all the Escrow Bid Documentation and located conveniently to both District's and Contractor's offices.

b. The Escrow Bid Documentation shall be examined by both District and Contractor, at any time deemed necessary by either District or Contractor, to assist in the negotiation of price adjustments and change orders or the settlement of disputes and claims. In the case of legal proceedings, Escrow Bid Documentation shall be used subject to the terms of an appropriate protective order if requested by Contractor and ordered by a court of competent jurisdiction. Examination of the Escrow Bid Documentation is subject to the following conditions:

(1) As trade secrets, the Escrow Bid Documentation is proprietary and confidential to the extent allowed by law.

(2) District and Contractor shall each designate, in writing to the other party **SEVEN (7)** calendar days prior to any examination, the names of representatives who are authorized to examine the Escrow Bid Documentation. No other person shall have access to the Escrow Bid Documentation.

(3) Access to the documents may take place only in the presence of duly designated representatives of the District and Contractor. If Contractor fails to designate a representative or appear for joint examination on **SEVEN (7)** calendar days notice, then the District representative may examine the Escrow Bid Documents alone upon an additional **THREE (3)** calendar days notice if a representative of the Contractor does not appear at the time set.

(4) If a subcontractor has submitted sealed information to be included in the Escrow Bid Documents, access to those documents may take place only in the presence of a duly designated representative of the District,

Contractor and that subcontractor. If that subcontractor fails to designate a representative or appear for joint examination on **SEVEN (7)** calendar days notice, then the District representative and/or the Contractor may examine the Escrow Bid Documentation without that subcontractor present upon an additional **THREE (3)** calendar days notice if a representative of that subcontractor does not appear at the time set.

c. The Escrow Bid Documentation will be returned to Contractor at such time as the Contract has been completed and final settlement has been achieved.

END OF DOCUMENT

DOCUMENT 00 57 00

ESCROW AGREEMENT IN LIEU OF RETENTION
Public Contact Code Section 22300

(Note: Contractor must use this form.)

This Escrow Agreement ("Escrow Agreement") is made and entered into this _____ day of _____, 20___, by and between the Marin Community College District ("District"), whose address is _____,California, and _____ ("Contractor"), whose address is _____, and _____ ("Escrow Agent"), a state or federally chartered bank in the state of California, whose address is _____ _____.

For the consideration hereinafter set forth, District, Contractor, and Escrow Agent agree as follows:

1. Pursuant to section 22300 of Public Contract Code of the State of California, which is hereby incorporated by reference, Contractor has the following two (2) options:

   ☐ Deposit securities with Escrow Agent as a substitute for retention earnings required to be withheld by District pursuant to the Construction Contract No. _____entered into between District and Contractor for the **I21-35617 – ORGANIC FARM CLASSROOMS** Project, in the amount of _____ Dollars ($_____) dated, _____, 20_____, (the "Contract"); **or**

   ☐ On written request of Contractor, District shall make payments of the retention earnings for the above referenced Contract directly to Escrow Agent.

   When Contractor deposits the securities as a substitute for Contract earnings (first option), Escrow Agent shall notify District within ten (10) calendar days of the deposit. The market value of the securities at the time of substitution and at all times from substitution until the termination of the Escrow Agreement shall be at least equal to the cash amount then required to be withheld as retention under terms of Contract between District and Contractor.

   Securities shall be held in name of Marin Community College Community College District, and shall designate Contractor as beneficial owner.

2. District shall make progress payments to Contractor for those funds which otherwise would be withheld from progress payments pursuant to Contract provisions, provided that Escrow Agent holds securities in form and amount specified above.

3. When District makes payment of retention earned directly to Escrow Agent, Escrow Agent shall hold them for the benefit of Contractor until the time that the escrow

created under this Escrow Agreement is terminated. Contractor may direct the investment of the payments into securities. All terms and conditions of this Escrow Agreement and the rights and responsibilities of the Parties shall be equally applicable and binding when District pays Escrow Agent directly.

4. Contractor shall be responsible for paying all fees for the expenses incurred by Escrow Agent in administering the Escrow Account, and all expenses of District. The District will charge Contractor $_____ for each of District's deposits to the escrow account. These expenses and payment terms shall be determined by District, Contractor, and Escrow Agent.

5. Interest earned on securities or money market accounts held in escrow and all interest earned on that interest shall be for sole account of Contractor and shall be subject to withdrawal by Contractor at any time and from time to time without notice to District.

6. Contractor shall have the right to withdraw all or any part of the principal in the Escrow Account only by written notice to Escrow Agent accompanied by written authorization from District to Escrow Agent that District consents to withdrawal of amount sought to be withdrawn by Contractor.

7. District shall have the right to draw upon the securities and/or withdraw amounts from the Escrow Account in the event of default by Contractor. Upon seven (7) days' written notice to Escrow Agent from District of the default, if applicable, Escrow Agent shall immediately convert the securities to cash and shall distribute the cash as instructed by District.

8. Upon receipt of written notification from District certifying that the Contract is final and complete, and that Contractor has complied with all requirements and procedures applicable to the Contract, Escrow Agent shall release to Contractor all securities and interest on deposit less escrow fees and charges of the Escrow Account. The escrow shall be closed immediately upon disbursement of all monies and securities on deposit and payments of fees and charges.

9. Escrow Agent shall rely on written notifications from District and Contractor pursuant to Paragraphs 5 through 8, inclusive, of this Escrow Agreement and District and Contractor shall hold Escrow Agent harmless from Escrow Agent's release and disbursement of securities and interest as set forth above.

10. Names of persons who are authorized to give written notice or to receive written notice on behalf of District and on behalf of Contractor in connection with the foregoing, and exemplars of their respective signatures are as follows:

On behalf of District:

Title

Name

Signature

Address

On behalf of Contractor:

Title

Name

Signature

Address

On behalf of Escrow Agent:

Title

Name

Signature

Address

At the time of Escrow Account is opened, District and Contractor shall deliver to Escrow Agent a fully executed of this Agreement.

IN WITNESS WHEREOF, the parties have executed this Agreement by their proper officers on the date first set forth above.

On behalf of District:

Title

Name

Signature

Address

On behalf of Contractor:

Title

Name

Signature

Address

END OF DOCUMENT

DOCUMENT 00 61 13.13

PERFORMANCE BOND
(100% of Contract Price)

(Note: Bidders must use this form, NOT a surety company form.)

KNOW ALL PERSONS BY THESE PRESENTS:

WHEREAS, the governing board ("Board") of the Marin Community College District, ("District") and _____ ("Principal") have entered into a contract for the furnishing of all materials and labor, services and transportation, necessary, convenient, and proper to perform the following project:

I21-35617 – ORGANIC FARM CLASSROOMS (Project Name)

("Project" or "Contract") which Contract dated _____, 20___, and all of the Contract Documents attached to or forming a part of the Contract, are hereby referred to and made a part hereof; and

WHEREAS, said Principal is required under the terms of the Contract to furnish a bond for the faithful performance of the Contract.

NOW, THEREFORE, the Principal and _____ _____ ("Surety") are held and firmly bound unto the Board of the District in the penal sum of

_____ Dollars ($_____), lawful money of the United States, for the payment of which sum well and truly to be made we bind ourselves, our heirs, executors, administrators, successors, and assigns jointly and severally, firmly by these presents, to:

- Perform all the work required to complete the Project; and

- Pay to the District all damages the District incurs as a result of the Principal's failure to perform all the Work required to complete the Project.

The condition of the obligation is such that, if the above bounden Principal, his or its heirs, executors, administrators, successors, or assigns, shall in all things stand to and abide by, and well and truly keep and perform the covenants, conditions, and agreements in the Contract and any alteration thereof made as therein provided, on his or its part to be kept and performed at the time and in the intent and meaning, including all contractual guarantees and warrantees of materials and workmanship, and shall indemnify and save harmless the District, its trustees, officers and agents, as therein stipulated, then this obligation shall become null and void, otherwise it shall be and remain in full force and virtue.

Surety expressly agrees that the District may reject any contractor or subcontractor proposed by Surety to fulfill its obligations in the event of default by the Principal. Surety

shall not utilize Principal in completing the Work nor shall Surety accept a Bid from Principal for completion of the Work if the District declares the Principal to be in default and notifies Surety of the District's objection to Principal's further participation in the completion of the Work.

As a condition precedent to the satisfactory completion of the Contract, the above obligation shall hold good for a period equal to the warranty and/or guarantee period of the Contract, during which time Surety's obligation shall continue if Contractor shall fail to make full, complete, and satisfactory repair and replacements and totally protect the District from loss or damage resulting from or caused by defective materials or faulty workmanship. The obligations of Surety hereunder shall continue so long as any obligation of Contractor remains. Nothing herein shall limit the District's rights or the Contractor or Surety's obligations under the Contract, law or equity, including, but not limited to, California Code of Civil Procedure section 337.15.

The Surety, for value received, hereby stipulates and agrees that no change, extension of time, alteration, or addition to the terms of the contract or to the work to be performed thereunder or the specifications accompanying the same shall in any way affect its obligation on this bond, and it does hereby waive notice of any such change, extension of time, alteration, or addition to the terms of the Contract or to the work or to the specifications.

In the event that suit or other proceeding is brought upon this Bond by the Obligee, the Surety shall pay to the Obligee all costs, expenses and fees incurred by the Obligee in connection therewith, including without limitation, attorneys' fees.

IN WITNESS WHEREOF, two (2) identical counterparts of this instrument, each of which shall for all purposes be deemed an original thereof, have been duly executed by the Principal and Surety above named, on the _____ day of _____, 20___.

(Affix Corporate Seal)

_____
Principal

_____
By

_____
Surety

_____
By

_____
Name of California Agent of Surety

_____
Address of California Agent of Surety

_____
Telephone No. of California Agent of Surety

Bidder must attach a Notarial Acknowledgment for all Surety's signatures and a Power of Attorney and Certificate of Authority for Surety. The California Department of Insurance must authorize the Surety to be an admitted surety insurer.

END OF DOCUMENT

DOCUMENT 00 61 13.16

PAYMENT BOND
Contractor's Labor & Material Bond
(100% of Contract Price)

(Note: Bidders must use this form, NOT a surety company form.)

KNOW ALL PERSONS BY THESE PRESENTS:

WHEREAS, the governing board ("Board") of the Marin Community College District, (or "District") and _____ _____, ("Principal") have entered into a contract for the furnishing of all materials and labor, services and transportation, necessary, convenient, and proper to perform the following project:

I21-35617 – ORGANIC FARM CLASSROOMS (Project Name/Project Number)

("Project" or "Contract") which Contract dated _____, 2017, and all of the Contract Documents attached to or forming a part of the Contract, are hereby referred to and made a part hereof; and

WHEREAS, pursuant to law and the Contract, the Principal is required, before entering upon the performance of the work, to file a good and sufficient bond with the body by which the Contract is awarded in an amount equal to one hundred percent (100%) of the Contract price, to secure the claims to which reference is made in sections 9000 through 9510 and 9550 through 9566 of the Civil Code, and division 2, part 7, of the Labor Code.

NOW, THEREFORE, the Principal and_____ ("Surety") are held and firmly bound unto all laborers, material men, and other persons referred to in said statutes in the sum of _____ Dollars ($_____), lawful money of the United States, being a sum not less than the total amount payable by the terms of Contract, for the payment of which sum well and truly to be made, we bind ourselves, our heirs, executors, administrators, successors, or assigns, jointly and severally, by these presents.

The condition of this obligation is that if the Principal or any of his or its subcontractors, of the heirs, executors, administrators, successors, or assigns of any, all, or either of them shall fail to pay for any labor, materials, provisions, provender, or other supplies, used in, upon, for or about the performance of the work contracted to be done, or for any work or labor thereon of any kind, or for amounts required to be deducted, withheld, and paid over to the Employment Development Department from the wages of employees of the Principal or any of his or its subcontractors of any tier under Section 13020 of the Unemployment Insurance Code with respect to such work or labor, that the Surety will pay the same in an amount not exceeding the amount herein above set forth, and also in case suit is brought upon this bond, will pay a reasonable attorney's fee to be awarded and fixed by the Court, and to be taxed as costs and to be included in the judgment therein rendered.

It is hereby expressly stipulated and agreed that this bond shall inure to the benefit of any and all persons, companies, and corporations entitled to file claims under section 9100 of

the Civil Code, so as to give a right of action to them or their assigns in any suit brought upon this bond.

Should the condition of this bond be fully performed, then this obligation shall become null and void; otherwise it shall be and remain in full force and affect.

And the Surety, for value received, hereby stipulates and agrees that no change, extension of time, alteration, or addition to the terms of Contract or the specifications accompanying the same shall in any manner affect its obligations on this bond, and it does hereby waive notice of any such change, extension, alteration, or addition.

IN WITNESS WHEREOF, two (2) identical counterparts of this instrument, each of which shall for all purposes be deemed an original thereof, have been duly executed by the Principal and Surety above named, on the _____ day of _____, 2017.

(Affix Corporate Seal)

_____
Principal

_____
By

_____
Surety

_____
By

_____
Name of California Agent of Surety

_____
Address of California Agent of Surety

_____
Telephone No. of California Agent of Surety

Bidder must attach a Notarial Acknowledgment for all Surety's signatures and a Power of Attorney and Certificate of Authority for Surety. The California Department of Insurance must authorize the Surety to be an admitted surety insurer.

END OF DOCUMENT

DOCUMENT 00 65 19.26

AGREEMENT AND RELEASE OF ANY AND ALL CLAIMS

THIS AGREEMENT AND RELEASE OF CLAIMS ("Agreement and Release") IS MADE AND ENTERED INTO THIS _____ DAY OF _____, 20___ by and between the MARIN COMMUNITY COLLEGE DISTRICT ("District") and _____ _____ ("Contractor"), whose place of business is _____ _____.

RECITALS:

A. California Public Contract Code section 7100 provides that a public entity is not prohibited from placing in a public works contract and enforcing a contract provision which provides that payment of undisputed contract amounts is contingent upon the contractor furnishing the public entity with a release of all claims against the public entity arising by virtue of the public works contract related to those amounts; provided that disputed contract claims in stated amounts may be specifically excluded by the contractor from the operation of the release.

B. District and Contractor entered into PROJECT/CONTRACT NO.: **I21-35617 – ORGANIC FARM CLASSROOMS** ("Contract" or "Project") in the County of Marin, California.

C. The Work under the Contract has been completed and the parties desire to enter into this Agreement and Release as provided in California Public Contract Code section 7100 concerning payment of undisputed contract amounts under the Contract.

NOW, THEREFORE, it is mutually agreed between District and Contractor as follows:

AGREEMENT

1. Contractor will only be assessed liquidated damages as detailed below:

   Original Contract Sum $_____

   Modified Contract Sum $_____

   Payment to Date $_____

   Liquidated Damages $_____

   Payment Due Contractor $_____

2. Subject to the provisions hereof, District shall forthwith pay to Contractor the undisputed sum of _____ Dollars ($_____) under the Contract, less any amounts represented by any notice to withhold funds on file with District as of the date of such payment.

3. Contractor acknowledges and hereby agrees that there are no unresolved or outstanding claims in dispute against District arising from the performance of work under the Contract, except for the claims described in Paragraph 4 and continuing obligations described in Paragraph 6. It is the intention of the parties in executing this Agreement and Release that this Agreement and Release shall be effective as a full, final and general release of all claims, demands, actions, causes of action, obligations, costs, expenses, damages, losses and liabilities of Contractor against District, all its respective agents, employees, inspectors, assignees and transferees except for the Disputed Claim is set forth in Paragraph 4 and continuing obligations described in Paragraph 6 hereof.

4. The following claims submitted under Document 00 72 13 (General Conditions), Article 25, are disputed (hereinafter, the "Disputed Claims") and are specifically excluded from the operation of this Agreement and Release:

Claim No. Submitted	Description of Claim	Amount of Claim	Date Claim
_____	_____	$_____	_____
_____	_____	$_____	_____
_____	_____	$_____	_____

[If further space is required, attach additional sheets showing the required information.]

5. Consistent with California Public Contract Code section 7100, Contractor hereby agrees that, in consideration of the payment set forth in Paragraph 2 hereof, Contractor hereby releases and forever discharges District, all its agents, employees, inspectors, assignees, and transferees from any and all liability, claims, demands, actions, or causes of action of whatever kind or nature arising out of or in any way concerned with the Work under the Contract.

6. Guarantees and warranties for the Work, and any other continuing obligation of Contractor, shall remain in full force and effect as specified in the Contract Documents.

7. To the furthest extent permitted by California law, Contractor shall defend, indemnify, and hold harmless the District, its agents, representatives, officers, consultants, employees, trustees, and volunteers (the "indemnified parties") from any and all losses, liabilities, claims, suits, and actions of any kind, nature, and description, including, but not limited to, attorneys' fees and costs, directly or indirectly arising out of, connected with, or resulting from the performance of the Contract unless caused wholly by the sole negligence or willful misconduct of the indemnified parties.

8. Contractor hereby waives the provisions of California Civil Code section 1542 which provides as follows:

A GENERAL RELEASE DOES NOT EXTEND TO CLAIMS WHICH THE CREDITOR DOES NOT KNOW OR SUSPECT TO EXIST IN HIS OR HER FAVOR AT THE TIME OF EXECUTING THE RELEASE, WHICH IF KNOWN BY HIM OR HER MUST HAVE MATERIALLY AFFECTED HIS OR HER SETTLEMENT WITH THE DEBTOR.

9. The provisions of this Agreement and Release are contractual in nature and not mere recitals and shall be considered independent and severable. If any such provision or any part thereof shall be at any time held invalid in whole or in part under any federal, state, county, municipal, or other law, ruling, or regulations, then such provision, or part thereof, shall remain in force and effect to the extent permitted by law, and the remaining provisions of this Agreement and Release shall also remain in full force and effect, and shall be enforceable.

10. All rights of District shall survive completion of the Work or termination of Contract, and execution of this Release.

* * * CAUTION: THIS IS A RELEASE - READ BEFORE EXECUTING * * *

MARIN COMMUNITY COLLEGE DISTRICT

SIGNATURE: _____

PRINT NAME: _____

TITLE: _____

CONTRACTOR: _____

SIGNATURE: _____

PRINT NAME: _____

TITLE: _____

END OF DOCUMENT

DOCUMENT 00 65 36

GUARANTEE FORM

_____("Contractor") hereby agrees that the _____ _____ ("Work" of Contractor) which Contractor has installed for the Marin Community College District ("District") for the following project:

PROJECT: **I21-35617 – ORGANIC FARM CLASSROOMS**

("Project" or "Contract") has been performed in accordance with the requirements of the Contract Documents and that the Work as installed will fulfill the requirements of the Contract Documents.

The undersigned agrees to repair or replace any or all of such Work that may prove to be defective in workmanship or material together with any other adjacent Work that may be displaced in connection with such replacement within a period of _____ year(s) from the date of completion as defined in Public Contract Code section 7107, subdivision (c), ordinary wear and tear and unusual abuse or neglect excepted. The date of completion is _____, 20___.

In the event of the undersigned's failure to comply with the above-mentioned conditions within a reasonable period of time, as determined by the District, but not later than seven (7) days after being notified in writing by the District, the undersigned authorizes the District to proceed to have said defects repaired and made good at the expense of the undersigned. The undersigned shall pay the costs and charges therefor upon demand.

Date: _____

Proper Name of Contractor: _____

Signature: _____

Print Name: _____

Title: _____

Representatives to be contacted for service subject to terms of Contract:

NAME: _____

ADDRESS: _____

PHONE NO.: _____

END OF DOCUMENT

DOCUMENT 00 72 13

TABLE OF CONTENTS

GENERAL CONDITIONS 1

1. CONTRACT TERMS AND DEFINITIONS 1

1.1. Definitions 1

1.2. Laws Concerning The Contract 6

1.3. No Oral Agreements 6

1.4. No Assignment 6

1.5. Notice And Service Thereof 6

1.6. No Waiver 7

1.7. Substitutions For Specified Items 7

1.8. Materials and Work 7

2. [RESERVED] 8

3. ARCHITECT 9

4. CONSTRUCTION MANAGER 9

5. INSPECTOR, INSPECTIONS, AND TESTS 10

5.1. Project Inspector 10

5.2. Tests and Inspections 10

5.3. Costs for After Hours and/or Off Site Inspections 11

6. CONTRACTOR 11

6.1. Status of Contractor 11

6.2. Project inspection Card(s) 11

6.3. Contractor's Supervision 12

6.4. Duty to Provide Fit Workers 12

6.5. Field Office 13

6.6. Purchase of Materials and Equipment 13

6.7. Documents On Work 13

6.8. Preservation of Records 14

6.9. Integration of Work 14

6.10. Notifications 14

6.11 Obtaining of Permits and Licenses 14

6.12. Royalties and Patents 15

6.13. Work to Comply With Applicable Laws and Regulations 15

6.14. Safety/Protection of Persons and Property 16

6.15. Working Evenings and Weekends 18

6.16. Cleaning Up 18

7. SUBCONTRACTORS 19

8. OTHER CONTRACTS/CONTRACTORS 21

9. DRAWINGS AND SPECIFICATIONS 21

10. CONTRACTOR'S SUBMITTALS AND SCHEDULES 23

10.1. Schedule of Work and Schedule of Values 23

10.2. Monthly Progress Schedule(s) 25

10.3. Material Safety Data Sheets (MSDS) 25

11. SITE ACCESS, CONDITIONS, AND REQUIREMENTS 26

11.1. Site Investigation 26

11.2. Soils Investigation Report 26

11.3. Access to Work 26

11.4. Layout and Field Engineering 27

11.5. Utilities 27

11.6. Sanitary Facilities 27

11.7. Surveys 27

11.8. Regional Notification Center 27

11.9. Existing Utility Lines 28

11.10. Notification 28

11.11. Hazardous Materials 28

11.12. No Signs 29

12. TRENCHES 29

12.1. Trenches Greater Than Five Feet 29

12.2. Excavation Safety 29

12.3. No Tort Liability of District 29

12.4. No Excavation Without Permits 29

12.5. Discovery of Hazardous Waste and/or Unusual Conditions 29

13. INSURANCE AND BONDS 30

13.1 Insurance 30

13.2 Contract Security - Bonds 34

14. WARRANTY/GUARANTEE/INDEMNITY 34

14.1. Warranty/Guarantee 34

14.2. Indemnity 35

15. TIME 36

15.1. Notice to Proceed 36

15.2. Computation of Time / Adverse Weather 37

15.3. Hours of Work 38

15.4. Progress and Completion 38

15.5. Schedule 38

15.6. Expeditious Completion 38

16. EXTENSIONS OF TIME – LIQUIDATED DAMAGES 38

16.1. Liquidated Damages 38

16.2. Excusable Delay 39

16.3. No Additional Compensation for Delays Within Contractor's Control 39

16.4. Float or Slack in the Schedule 40

17. CHANGES IN THE WORK 40

17.1. No Changes Without Authorization 40

17.2. Architect Authority 41

17.3. Change Orders 41

17.4. Construction Change Directives 41

17.5. Force Account Directives 42

17.6. Price Request 43

17.7. Proposed Change Order 43

17.8. Format for Proposed Change Order 45

17.9. Change Order Certification 47

17.10. Determination of Change Order Cost 47
17.11. Deductive Change Orders 48
17.12. Addition or Deletion of Alternate Bid Item(s) 48
17.13. Discounts, Rebates, and Refunds 48
17.14. Accounting Records 48
17.15. Notice Required 49
17.16. Applicability to Subcontractors 49
17.17. Alteration to Change Order Language 49
17.18. Failure of Contractor to Execute Change Order 49
18. REQUEST FOR INFORMATION 49
19. PAYMENTS 50
19.1. Contract Price 50
19.2. Applications for Progress Payments 50
19.3. Progress Payments 53
19.4. Decisions to Withhold Payment 54
19.5. Subcontractor Payments 57
20. COMPLETION OF THE WORK 57
20.1. Completion 57
20.2. Close-Out Procedures 58
20.3. Final Inspection 59
20.4. Costs of Multiple Inspections 60
20.5. Partial Occupancy or Use Prior to Completion 60
21. FINAL PAYMENT AND RETENTION 61

21.1. Final Payment 61

21.2. Prerequisites for Final Payment 61

21.3. Retention 62

21.4. Substitution of Securities 62

22. UNCOVERING OF WORK 62

23. NONCONFORMING WORK AND CORRECTION OF WORK 62

23.1. Nonconforming Work 62

23.2. Correction of Work 63

23.3 District's Right to Perform Work 63

24. TERMINATION AND SUSPENSION 64

24.1. District's Right to Terminate Contractor for Cause 64

24.2. Termination of Contractor for Convenience 67

24.3. Suspension of Work 67

25. CLAIMS AND DISPUTES 68

25.1. Performance During Dispute or Claim Process 68

25.2. Definition of Dispute 68

25.3. Dispute Presentation 68

25.4. Dispute Resolution 69

25.5. Definition of Claim 70

25.6. Claim Presentations 70

25.7. Claim Resolution 71

25.8. Dispute and Claim Resolution Non-Applicability 73

26. STATE LABOR, WAGE & HOUR, APPRENTICE, AND RELATED PROVISIONS 73

26.1. [RESERVED] 73

26.2. Wage Rates, Travel, and Subsistence 73

26.3. Hours of Work 75

26.4. Payroll Records 75

26.5. [RESERVED] 77

26.6. Apprentices 77

26.7. Non-Discrimination 78

26.8. Labor First Aid 78

27. [RESERVED] 78

28. MISCELLANEOUS 79

28.1. Assignment of Antitrust Actions 79

28.2. Excise Taxes 80

28.3. Taxes 80

28.4. Shipments 80

28.5. Compliance with Government Reporting Requirements 80

DOCUMENT 00 72 13

GENERAL CONDITIONS

1. CONTRACT TERMS AND DEFINITIONS

1.1. Definitions

Wherever used in the Contract Documents, the following terms shall have the meanings indicated, which shall be applicable to both the singular and plural thereof:

1.1.1. Adverse Weather: Shall be only weather that satisfies all of the following conditions: (1) unusually severe precipitation, sleet, snow, hail, heat, or cold conditions in excess of the norm for the location and time of year it occurred, (2) unanticipated, and (3) at the Project.

1.1.2. Approval, Approved, and/or Accepted: Refer to written authorization, unless stated otherwise.

1.1.3. Architect: The individual, partnership, corporation, joint venture, or any combination thereof, named as Architect, who will have the rights and authority assigned to the Architect in the Contract Documents. The term Architect means the Design Professional in General Responsible Charge as defined in DSA PR 13-02 on this Project or the Architect's authorized representative.

1.1.4. As-Built Drawings: Unless otherwise defined in the Special Conditions, reproducible blue line prints of drawings to be prepared on a monthly basis pursuant to the Contract Documents, that reflect changes made during the performance of the Work, recording differences between the original design of the Work and the Work as constructed since the preceding monthly submittal.

1.1.5. Bidder: A contractor who intends to provide a proposal to the District to perform the Work of this Contract.

1.1.6. Change Order: A written order to the Contractor authorizing an addition to, deletion from, or revision in the Work, and/or authorizing an adjustment in the Contract Price or Contract Time.

1.1.7. Claim: A Dispute that remains unresolved at the conclusion of the all the applicable Dispute Resolution requirements provided herein.

1.1.8. Construction Change Directive: A written order prepared and issued by the District, the Construction Manager, and/or the Architect and signed by the District and the Architect, directing a change in the Work.

1.1.9. Construction Manager: The individual, partnership, corporation, joint venture, or any combination thereof, or its authorized representative, named as such by the District. If no Construction Manager is used on the Project that is the subject

of this Contract, then all references to Construction Manager herein shall be read to refer to District.

1.1.10. Construction Schedule: The progress schedule of construction of the Project as provided by Contractor and approved by District.

1.1.11. Contract, Contract Documents: The Contract consists exclusively of the documents evidencing the agreement of the District and Contractor, identified as the Contract Documents. The Contract Documents consist of the following documents:

1.1.11.1. Notice to Bidders
1.1.11.2. Instructions to Bidders
1.1.11.3. Bid Form and Proposal
1.1.11.4. Bid Bond
1.1.11.5. Designated Subcontractors List
1.1.11.6. Site-Visit Certification (if a site visit was required)
1.1.11.7. Noncollusion Declaration
1.1.11.8. Notice of Award
1.1.11.9. Notice to Proceed
1.1.11.10. Agreement
1.1.11.11. Escrow of Bid Documentation
1.1.11.12. Escrow Agreement for Security Deposits in Lieu of Retention
1.1.11.13. Performance Bond
1.1.11.14. Payment Bond (Contractor's Labor & Material Bond)
1.1.11.15. General Conditions
1.1.11.16. Special Conditions (if applicable)
1.1.11.17. Labor Compliance Program Information and Forms (if applicable)
1.1.11.18. Hazardous Materials Procedures and Requirements
1.1.11.19. Workers' Compensation Certification
1.1.11.20. Prevailing Wage Certification
1.1.11.21. Disabled Veterans Business Enterprise Participation Certification (if applicable)
1.1.11.22. Drug-Free Workplace Certification
1.1.11.23. Tobacco-Free Environment Certification
1.1.11.24. Hazardous Materials Certification
1.1.11.25. Lead-Based Paint Certification
1.1.11.26. Imported Materials Certification
1.1.11.27. Criminal Background Investigation/Fingerprinting Certification
1.1.11.28. Buy American Certification (if applicable)
1.1.11.29. Roofing Project Certification (if applicable)
1.1.11.30. Iran Contracting Act Certification (if applicable)
1.1.11.31. Letter of Assent (if applicable)
1.1.11.32. All Plans, Technical Specifications, and Drawings
1.1.11.33. Any and all addenda to any of the above documents
1.1.11.34. Any and all change orders or written modifications to the above documents if approved in writing by the District

1.1.12. Contract Price: The total monies payable to the Contractor under the terms and conditions of the Contract Documents.

1.1.13. Contract Time: The time period stated in the Agreement for the completion of the Work.

1.1.14. Contractor: The person or persons identified in the Agreement as contracting to perform the Work to be done under this Contract, or the legal representative of such a person or persons.

1.1.15. Daily Job Report(s): Daily Project reports prepared by the Contractor's employee(s) who are present on Site, which shall include the information required herein.

1.1.16. Day(s): Unless otherwise designated, day(s) means calendar day(s).

1.1.17. Department of Industrial Relations (or "DIR"): is responsible, among other things, for labor compliance monitoring and enforcement of California prevailing wage laws and regulations for public works contracts.

1.1.18. Dispute: A separate demand by Contractor for a time extension; payment of money or damages arising from Work done by or on behalf of the Contractor pursuant to the Contract and payment of which is not otherwise expressly provided for or Contractor is not otherwise entitled to; or an amount of payment disputed by the District.

1.1.19. District: The public agency or the school district for which the Work is performed. The governing board of the District or its designees will act for the District in all matters pertaining to the Contract. The District may, at any time,

1.1.19.1. Direct the Contractor to communicate with or provide notice to the Construction Manager or the Architect on matters for which the Contract Documents indicate the Contractor will communicate with or provide notice to the District; and/or

1.1.19.2. Direct the Construction Manager or the Architect to communicate with or direct the Contractor on matters for which the Contract Documents indicate the District will communicate with or direct the Contractor.

1.1.20. Drawings (or "Plans"): The graphic and pictorial portions of the Contract Documents showing the design, location, scope and dimensions of the work, generally including plans, elevations, sections, details, schedules, sequence of operation, and diagrams.

1.1.21. DSA: Division of the State Architect.

1.1.22. Force Account Directive: A process that may be used when the District and the Contractor cannot agree on a price for a specific portion of work or before the Contractor prepares a prices for a specific portion of work and whereby the Contractor performs the work as indicated herein on a time and materials basis.

1.1.23. Labor Commissioner's Office (or "Labor Commissioner") also known as the Division of Labor Standards Enforcement ("DLSE"): Division of the DIR responsible for adjudicating wage claims, investigating discrimination and public works complaints, and enforcing Labor Code statutes and Industrial Welfare Commission orders.

1.1.24. Municipal Separate Storm Sewer System (or "MS4"): A system of conveyances used to collect and/or convey storm water, including, without limitation, catch basins, curbs, gutters, ditches, man-made channels, and storm drains.

1.1.25. Premises: The real property owned by the District on which the Site is located.

1.1.26. Product(s): New material, machinery, components, equipment, fixtures and systems forming the Work, including existing materials or components required and approved by the District for reuse.

1.1.27. Product Data: Illustrations, standard schedules, performance charts, instructions, brochures, diagrams, and other information furnished by the Contractor to illustrate a material, product, or system for some portion of the Work.

1.1.28. Project: The planned undertaking as provided for in the Contract Documents.

1.1.29. Project Inspector (or "Inspector"): The individual(s) retained by the District in accordance with title 24 of the California Code of Regulations to monitor and inspect the Project.

1.1.30. Project Stabilization Agreement (or "PSA"): a prehire collective bargaining agreement in accordance with Public Contract Code section 2500 et seq. that establishes terms and conditions of employment for a specific construction project or projects and/or is an agreement described in Section 158(f) of Title 29 of the United States Code.

1.1.31. Program Manager: The individual, partnership, corporation, joint venture, or any combination thereof, or its authorized representative, named as such by the District. If no Program Manager is designated for Project that is the subject of this Contract, then all references to Project Manager herein shall be read to refer to District.

1.1.32. Provide: Shall include "provide complete in place," that is, "furnish and install," and "provide complete and functioning as intended in place" unless specifically stated otherwise.

1.1.33. Qualified SWPPP Practitioners ("QSP"): certified personnel that attended a State Water Resources Control Board sponsored or approved training class and passed the qualifying exam.

1.1.34. Record Drawings: Unless otherwise defined in the Special Conditions, Reproducible drawings (or Plans) prepared pursuant to the requirements of the

Contract Documents, that reflect all changes made during the performance of the Work, recording differences between the original design of the Work and the Work as constructed upon completion of the Project.

1.1.35. Request for Information (or "RFI")**:** A written request prepared by the Contractor requesting that the Architect provide additional information necessary to clarify or amplify an item in the Contract Documents that the Contractor believes is not clearly shown or called for in the Drawings or Specifications or other portions of the Contract Documents, or to address problems that have arisen under field conditions.

1.1.36. Request for Substitution for Specified Item: A request by Contractor to substitute an equal or superior material, product, thing, or service for a specific material, product, thing, or service that has been designated in the Contract Documents by a specific brand or trade name.

1.1.37. Safety Orders: Written and/or verbal orders for construction issued by the California Division of Industrial Safety ("CalOSHA") or by the United States Occupational Safety and Health Administration ("OSHA").

1.1.38. Safety Plan: Contractor's safety plan specifically adapted for the Project. Contractor's Safety Plan shall comply with all provisions regarding Project safety, including all applicable provisions in these General Conditions.

1.1.39. Samples: Physical examples that illustrate materials, products, equipment, finishes, colors, or workmanship and that, when approved in accordance with the Contract Documents, establish standards by which portions of the Work will be judged.

1.1.40. Shop Drawings: All drawings, prints, diagrams, illustrations, brochures, schedules, and other data that are prepared by the Contractor, a subcontractor, manufacturer, supplier, or distributor, that illustrate how specific portions of the Work shall be fabricated or installed.

1.1.41. Site: The Project site as shown on the Drawings.

1.1.42. Specifications: That portion of the Contract Documents, Division 1 through Division 17, and all technical sections, and addenda to all of these, if any, consisting of written descriptions and requirements of a technical nature of materials, equipment, construction methods and systems, standards, and workmanship.

1.1.43. State: The State of California.

1.1.44. Storm Water Pollution Prevention Plan (or "SWPPP")**:** A document which identifies sources and activities at a particular facility that may contribute pollutants to storm water and contains specific control measures and time frames to prevent or treat such pollutants.

1.1.45. Subcontractor: A contractor and/or supplier who is under contract with the Contractor or with any other subcontractor, regardless of tier, to perform a portion of the Work of the Project.

1.1.46. Submittal Schedule: The schedule of submittals as provided by Contractor and approved by District.

1.1.47. Surety: The person, firm, or corporation that executes as surety the Contractor's Performance Bond and Payment Bond, and must be a California admitted surety insurer as defined in the Code of Civil Procedure section 995.120.

1.1.48. Work: All labor, materials, equipment, components, appliances, supervision, coordination, and services required by, or reasonably inferred from, the Contract Documents, that are necessary for the construction and completion of the Project.

1.2. Laws Concerning The Contract

Contract is subject to all provisions of the Constitution and laws of California and the United States governing, controlling, or affecting District, or the property, funds, operations, or powers of District, and such provisions are by this reference made a part hereof. Any provision required by law to be included in this Contract shall be deemed to be inserted.

1.3. No Oral Agreements

No oral agreement or conversation with any officer, agent, or employee of District, either before or after execution of Contract, shall affect or modify any of the terms or obligations contained in any of the documents comprising the Contract.

1.4. No Assignment

Contractor shall not assign this Contract or any part thereof including, without limitation, any services or money to become due hereunder without the prior written consent of the District. Assignment without District's prior written consent shall be null and void. Any assignment of money due or to be come due under this Contract shall be subject to a prior lien for services rendered or material supplied for performance of work called for under this Contract in favor of all persons, firms, or corporations rendering services or supplying material to the extent that claims are filed pursuant to the Civil Code, Code of Civil Procedure, Government Code, Labor Code, and/or Public Contract Code, and shall also be subject to deductions for liquidated damages or withholding of payments as determined by District in accordance with this Contract. Contractor shall not assign or transfer in any manner to a Subcontractor or supplier the right to prosecute or maintain an action against the District.

1.5. Notice And Service Thereof

1.5.1. Any notice from one party to the other or otherwise under Contract shall be in writing and shall be dated and signed by the party giving notice or by a duly

authorized representative of that party. Any notice shall not be effective for any purpose whatsoever unless served in one of the following manners:

1.5.1.1. If notice is given by personal delivery thereof, it shall be considered delivered on the day of delivery.

1.5.1.2. If notice is given by overnight delivery service, it shall be considered delivered on (1) day after date deposited, as indicated by the delivery service.

1.5.1.3. If notice is given by depositing same in United States mail, enclosed in a sealed envelope, it shall be considered delivered three (3) days after date deposited, as indicated by the postmarked date.

1.5.1.4. If notice is given by registered or certified mail with postage prepaid, return receipt requested, it shall be considered delivered on the day the notice is signed for.

1.6. No Waiver

The failure of District in any one or more instances to insist upon strict performance of any of the terms of this Contract or to exercise any option herein conferred shall not be construed as a waiver or relinquishment to any extent of the right to assert or rely upon any such terms or option on any future occasion. No action or failure to act by the District, Architect, or Construction Manager shall constitute a waiver of any right or duty afforded the District under the Contract, nor shall any action or failure to act constitute an approval of or acquiescence in any breach thereunder, except as may be specifically agreed in writing.

1.7. Substitutions For Specified Items

Unless the Special Conditions contain different provisions, Contractor shall not substitute different items for any items identified in the Contract Documents without prior written approval of the District.

1.8. Materials and Work

1.8.1. Except as otherwise specifically stated in this Contract, Contractor shall provide and pay for all materials, labor, tools, equipment, transportation, supervision, temporary constructions of every nature, and all other services, management, and facilities of every nature whatsoever necessary to execute and complete this Contract within the Contract Time.

1.8.2. Unless otherwise specified, all materials shall be new and the best of their respective kinds and grades as noted or specified, and workmanship shall be of good quality.

1.8.3. Materials shall be furnished in ample quantities and at such times as to insure uninterrupted progress of Work and shall be stored properly and protected as required.

1.8.4. For all materials and equipment specified or indicated in the Drawings, the Contractor shall provide all labor, materials, equipment, and services necessary for complete assemblies and complete working systems, functioning as intended. Incidental items not indicated on Drawings, nor mentioned in the Specifications, that can legitimately and reasonably be inferred to belong to the Work described, or be necessary in good practice to provide a complete assembly or system, shall be furnished as though itemized here in every detail. In all instances, material and equipment shall be installed in strict accordance with each manufacturer's most recent published recommendations and specifications.

1.8.5. Contractor shall, after award of Contract by District and after relevant submittals have been approved, place orders for materials and/or equipment as specified so that delivery of same may be made without delays to the Work. Contractor shall, upon demand from District, present documentary evidence showing that orders have been placed.

1.8.6. District reserves the right but has no obligation, for any neglect in complying with the above instructions, to place orders for such materials and/or equipment as it may deem advisable in order that the Work may be completed at the date specified in the Agreement, and all expenses incidental to the procuring of said materials and/or equipment shall be paid for by Contractor or withheld from payment(s) to Contractor.

1.8.7. Contractor warrants good title to all material, supplies, and equipment installed or incorporated in Work and agrees upon completion of all Work to deliver the Site to District, together with all improvements and appurtenances constructed or placed thereon by it, and free from any claims, liens, or charges. Contractor further agrees that neither it nor any person, firm, or corporation furnishing any materials or labor for any work covered by the Contract shall have any right to lien any portion of the Premises or any improvement or appurtenance thereon, except that Contractor may install metering devices or other equipment of utility companies or of political subdivision, title to which is commonly retained by utility company or political subdivision. In the event of installation of any such metering device or equipment, Contractor shall advise District as to owner thereof.

1.8.7.1. If a lien or a claim based on a stop payment notice of any nature should at any time be filed against the Work or any District property, by any entity that has supplied material or services at the request of the Contractor, Contractor and Contractor's Surety shall promptly, on demand by District and at Contractor's and Surety's own expense, take any and all action necessary to cause any such lien or a claim based on a stop payment notice to be released or discharged immediately therefrom.

1.8.7.2. If the Contractor fails to furnish to the District within ten (10) calendar days after demand by the District, satisfactory evidence that a lien or a claim based on a stop payment notice has been so released, discharged, or secured, the District may discharge such indebtedness and deduct the amount required therefor, together with any and all losses, costs, damages, and attorney's fees and expense incurred or suffered by District from any sum payable to Contractor under the Contract.

1.8.8. Nothing contained in this Article, however, shall defeat or impair the rights of persons furnishing materials or labor under any bond given by Contractor for their protection or any rights under any law permitting such protection or any rights under any law permitting such persons to look to funds due Contractor in hands of District (e.g., stop payment notices), and this provision shall be inserted in all subcontracts and material contracts and notice of its provisions shall be given to all persons furnishing material for work when no formal contract is entered into for such material.

1.8.9. Title to new materials and/or equipment for the Work of this Contract and attendant liability for its protection and safety shall remain with Contractor until incorporated in the Work of this Contract and accepted by District. No part of any materials and/or equipment shall be removed from its place of storage except for immediate installation in the Work of this Contract. Should the District, in its discretion, allow the Contractor to store materials and/or equipment for the Work off-site, Contractor will store said materials and/or equipment at a bonded warehouse and with appropriate insurance coverage at no cost to District. Contractor shall keep an accurate inventory of all materials and/or equipment in a manner satisfactory to District or its authorized representative and shall, at the District's request, forward it to the District.

2. [RESERVED]

3. ARCHITECT

3.1. The Architect shall represent the District during the Project and will observe the progress and quality of the Work on behalf of the District. Architect shall have the authority to act on behalf of District to the extent expressly provided in the Contract Documents and to the extent determined by District. Architect shall have authority to reject materials, workmanship, and/or the Work whenever rejection may be necessary, in Architect's reasonable opinion, to insure the proper execution of the Contract.

3.2. Architect shall, with the District and on behalf of the District, determine the amount, quality, acceptability, and fitness of all parts of the Work, and interpret the Specifications, Drawings, and shall, with the District, interpret all other Contract Documents.

3.3. Architect shall have all authority and responsibility established by law, including title 24 of the California Code of Regulations.

3.4. Contractor shall provide District and the Construction Manager with a copy of all written communication between Contractor and Architect at the same time as that communication is made to Architect, including, without limitation, all RFIs, correspondence, submittals, claims, and proposed change orders.

4. CONSTRUCTION MANAGER

4.1. If a construction manager is used on this Project ("Construction Manager" or "CM"), the Construction Manager will provide administration of the Contract on the

District's behalf. After execution of the Contract and Notice to Proceed, all correspondence and/or instructions from Contractor and/or District shall be forwarded through the Construction Manager. The Construction Manager will not be responsible for and will not have control or charge of construction means, methods, techniques, sequences, or procedures or for safety precautions in connection with the Work, which shall all remain the Contractor's responsibility.

4.2. The Construction Manager, however, will have authority to reject materials and/or workmanship not conforming to the Contract Documents, as determined by the District, the Architect, and/or the Project Inspector. The Construction Manager shall also have the authority to require special inspection or testing of any portion of the Work, whether it has been fabricated, installed, or fully completed. Any decision made by the Construction Manager, in good faith, shall not give rise to any duty or responsibility of the Construction Manager to the Contractor, any Subcontractor, their agents, employees, or other persons performing any of the Work. The Construction Manager shall have free access to any or all parts of Work at any time.

4.3. If the District does not use a Construction Manager on this Project, all references to Construction Manager or CM shall be read as District.

5. INSPECTOR, INSPECTIONS, AND TESTS

5.1. Project Inspector

5.1.1. One or more Project Inspector(s), including special Project Inspector(s), as required, will be assigned to the Work by District, in accordance with requirements of title 24, part 1, of the California Code of Regulations, to enforce the building code and monitor compliance with Plans and Specifications for the Project previously approved by the DSA. Duties of Project Inspector(s) are specifically defined in section 4-342 of said part 1 of title 24.

5.1.2. No Work shall be carried on except with the knowledge and under the inspection of the Project Inspector(s). The Project Inspector(s) shall have free access to any or all parts of Work at any time. Contractor shall furnish Project Inspector(s) reasonable opportunities for obtaining such information as may be necessary to keep Project Inspector(s) fully informed respecting progress and manner of work and character of materials, including, but not limited to, submission of form DSA 156 (or the most current version) to the Project Inspector at least 48 hours in advance of the commencement and completion of construction of each and every aspect of the Work. Forms are available on the DSA's website at: http://www.dgs.ca.gov/dsa/Forms.aspx. Inspection of Work shall not relieve Contractor from an obligation to fulfill this Contract. Project Inspector(s) and the DSA are authorized to stop work whenever the Contractor and/or its Subcontractor(s) are not complying with the Contract Documents. Any work stoppage by the Project Inspector(s) and/or DSA shall be without liability to the District. Contractor shall instruct its Subcontractors and employees accordingly.

5.1.3. If Contractor and/or any Subcontractor requests that the Project Inspector(s) perform any inspection off-site, this shall only be done if it is allowable

pursuant to applicable regulations and DSA, if the Project Inspector(s) agree to do so, and at the expense of the Contractor.

5.2. Tests and Inspections

5.2.1. Tests and Inspections shall comply with title 24, part 1, California Code of Regulations, group 1, article 5, section 4-335, and with the provisions of the Specifications.

5.2.2. The District will select an independent testing laboratory to conduct the tests. Selection of the materials required to be tested shall be by the laboratory or the District's representative and not by the Contractor. The Contractor shall notify the District's representative a sufficient time in advance of its readiness for required observation or inspection.

5.2.3. The Contractor shall notify the District's representative a sufficient time in advance of the manufacture of material to be supplied under the Contract Documents, which must by terms of the Contract Documents be tested, in order that the District may arrange for the testing of same at the source of supply. This notice shall be, at a minimum, seventy-two (72) hours prior to the manufacture of the material that needs to be tested.

5.2.4. Any material shipped by the Contractor from the source of supply prior to having satisfactorily passed such testing and inspection or prior to the receipt of notice from said representative that such testing and inspection will not be required, shall not be incorporated into and/or onto the Project.

5.2.5. The District will select and pay testing laboratory costs for all tests and inspections. Costs of tests of any materials found to be not in compliance with the Contract Documents shall be paid for by the District and reimbursed by the Contractor or deducted from the Contract Price.

5.3. Costs for After Hours and/or Off Site Inspections

If the Contractor performs Work outside the Inspector's regular working hours or requests the Inspector to perform inspections off Site, costs of any inspections required outside regular working hours or off Site shall be borne by the Contractor and may be invoiced to the Contractor by the District or the District may deduct those expenses from the next Progress Payment.

6. CONTRACTOR

Contractor shall construct the Work for the Contract price including any adjustment(s) to the Contract Price pursuant to provisions herein regarding changes to the Contract Price. Except as otherwise noted, Contractor shall provide and pay for all labor, materials, equipment, permits, fees, licenses, facilities, transportation, taxes, and services necessary for the proper execution and completion of the Work, except as indicated herein.

6.1. Status of Contractor

6.1.1. Contractor is and shall at all times be deemed to be an independent contractor and shall be wholly responsible for the manner in which it and its Subcontractors perform the services required of it by the Contract Documents. Nothing herein contained shall be construed as creating the relationship of employer and employee, or principal and agent, between the District, or any of the District's employees or agents, and Contractor or any of Contractor's Subcontractors, agents or employees. Contractor assumes exclusively the responsibility for the acts of its employees as they relate to the services to be provided during the course and scope of their employment. Contractor, its Subcontractors, agents, and its employees shall not be entitled to any rights or privileges of District employees. District shall be permitted to monitor the Contractor's activities to determine compliance with the terms of this Contract.

6.1.2. As required by law, Contractor and all Subcontractors shall be properly licensed and regulated by the Contractor's State License Board 9821 Business Park Drive, Sacramento, California 95827, http://www.cslb.ca.gov.

6.1.3. As required by law, Contractor and all Subcontractors shall be properly registered as public works contractors by the Department of Industrial Relations at https://efiling.dir.ca.gov/PWCR/ or current URL.

6.2. Project Inspection Card(s)

Contractor shall verify that forms DSA 152 (or current version) are issued for the Project prior to the commencement of construction.

6.3. Contractor's Supervision

6.3.1. During progress of the Work, Contractor shall keep on the Premises, and at all other locations where any Work related to the Contract is being performed, a competent project manager and construction superintendent who are employees of the Contractor, to whom the District does not object and at least one of whom shall be fluent in English, written and verbal.

6.3.2. The project manager and construction superintendent shall both speak fluently the predominant language of the Contractor's employees.

6.3.3. Before commencing the Work herein, Contractor shall give written notice to District of the name of its project manager and construction superintendent. Neither the Contractor's project manager nor construction superintendent shall be changed except with prior written notice to District, unless the Contractor's project manager and/or construction superintendent proves to be unsatisfactory to Contractor, District, any of the District's employees, agents, the Construction Manager, or the Architect, in which case, Contractor shall notify District in writing. The Contractor's project manager and construction superintendent shall each represent Contractor, and all directions given to Contractor's project manager and/or construction superintendent shall be as binding as if given to Contractor.

6.3.4. Contractor shall give efficient supervision to Work, using its best skill and attention. Contractor shall carefully study and compare all Contract Documents,

Drawings, Specifications, and other instructions and shall at once report to District, Construction Manager, and Architect any error, inconsistency, or omission that Contractor or its employees and Subcontractors may discover, in writing, with a copy to District's Project Inspector(s). The Contractor shall have responsibility for discovery of errors, inconsistencies, or omissions.

6.4. Duty to Provide Fit Workers

6.4.1. Contractor and Subcontractor(s) shall at all times enforce strict discipline and good order among their employees and shall not employ or work any unfit person or anyone not skilled in work assigned to that person. It shall be the responsibility of Contractor to ensure compliance with this requirement. District may require Contractor to permanently remove unfit persons from Project Site.

6.4.2. Any person in the employ of Contractor or Subcontractor(s) whom District may deem incompetent or unfit shall be excluded from working on the Project and shall not again be employed on the Project except with the prior written consent of District.

6.4.3. The Contractor shall furnish labor that can work in harmony with all other elements of labor employed or to be employed in the Work.

6.4.4. If Contractor intends to make any change in the name or legal nature of the Contractor’s entity, Contractor must first notify the District. The District shall determine if Contractor’s intended change is permissible while performing this Contract.

6.5. Field Office

6.5.1. Contractor shall provide a temporary office on the Work Site for the District’s use exclusively, during the term of the Contract.

6.6. Purchase of Materials and Equipment

The Contractor is required to order, obtain, and store materials and equipment sufficiently in advance of its Work at no additional cost or advance payment from District to assure that there will be no delays.

6.7. Documents On Work

6.7.1. Contractor shall at all times keep on the Work Site, or at another location as the District may authorize in writing, one legible copy of all Contract Documents, including Addenda and Change Orders, and Titles 19 and 24 of the California Code of Regulations, the specified edition(s) of the Uniform Building Code, all approved Drawings, Plans, Schedules, and Specifications, and all codes and documents referred to in the Specifications, and made part thereof. These documents shall be kept in good order and available to District, Construction Manager, Architect, Architect's representatives, the Project Inspector(s), and all authorities having jurisdiction. Contractor shall be acquainted with and comply with the provisions of these titles as they relate to this Project. (See particularly the duties of Contractor, Title 24, Part 1, California Code of Regulations, section 4-343.) Contractor shall also be acquainted with and comply with all California Code of Regulations provisions relating to conditions on this Project, particularly Titles 8 and 17. Contractor shall coordinate with Architect and Construction Manager and shall submit its verified report(s) according to the requirements of Title 24.

6.7.2. Daily Job Reports.

6.7.2.1. Contractor shall maintain, at a minimum, at least one (1) set of Daily Job Reports on the Project. These must be prepared by the Contractor's employee(s) who are present on Site, and must include, at a minimum, the following information:

6.7.2.1.1. A brief description of all Work performed on that day.
6.7.2.1.2. A summary of all other pertinent events and/or occurrences on that day.
6.7.2.1.3. The weather conditions on that day.
6.7.2.1.4. A list of all Subcontractor(s) working on that day,
6.7.2.1.5. A list of each Contractor employee working on that day and the total hours worked for each employee.
6.7.2.1.6. A complete list of all equipment on Site that day, whether in use or not.
6.7.2.1.7. All complete list of all materials, supplies, and equipment delivered on that day.
6.7.2.1.8. A complete list of all inspections and tests performed on that day.

6.7.2.2. Each day Contractor shall provide a copy of the previous day's Daily Job Report to the District or the Construction Manager.

6.8. Preservation of Records

The District shall have the right to examine and audit all Daily Job Reports or other Project records of Contractor's project manager(s), project superintendent(s), and/or project foreperson(s), all certified payroll records and/or related documents including, without limitation, payroll, payment, timekeeping and tracking documents; all books, estimates, records, contracts, documents, bid documents, bid cost data, subcontract job cost reports, and other data of the Contractor, any Subcontractor, and/or supplier,

including computations and projections related to bidding, negotiating, pricing, or performing the Work or Contract modification, in order to evaluate the accuracy, completeness, and currency of the cost, manpower, coordination, supervision, or pricing data at no additional cost to the District. These documents may be duplicative and/or be in addition to any Bid Documents held in escrow by the District. The Contractor shall make available at its office at all reasonable times the materials described in this paragraph for the examination, audit, or reproduction until three (3) years after final payment under this Contract. Notwithstanding the provisions above, Contractor shall provide any records requested by any governmental agency, if available, after the time set forth above.

6.9. Integration of Work

6.9.1. Contractor shall do all cutting, fitting, patching, and preparation of Work as required to make its several parts come together properly, to fit it to receive or be received by work of other contractors, and to coordinate tolerances to various pieces of work, showing upon, or reasonably implied by, the Drawings and Specifications for the completed structure, and shall conform them as District and/or Architect may direct.

6.9.2. Contractor shall make its own layout of lines and elevations and shall be responsible for the accuracy of both Contractor's and Subcontractors' work resulting therefrom.

6.9.3. Contractor and all Subcontractors shall take all field dimensions required in performance of the Work, and shall verify all dimensions and conditions on the Site. All dimensions affecting proper fabrication and installation of all Work must be verified prior to fabrication by taking field measurements of the true conditions. If there are any discrepancies between dimensions in drawings and existing conditions which will affect the Work, Contractor shall bring such discrepancies to the attention of the District and Architect for adjustment before proceeding with the Work. In doing so, it is recognized that Contractor is not acting in the capacity of a licensed design professional, and that Contractor's examination is made in good faith to facilitate construction and does not create an affirmative responsibility to detect errors, omissions or inconsistencies in the Contract Documents or to ascertain compliance with applicable laws, building codes or regulations. Following receipt of written notice from Contractor, the District and/or Architect shall inform Contractor what action, if any, Contractor shall take with regard to such discrepancies

6.9.4. All cost caused by defective or ill-timed Work shall be borne by Contractor, inclusive of repair work.

6.9.5. Contractor shall not endanger any work performed by it or anyone else by cutting, excavating, or otherwise altering work and shall not cut or alter work of any other contractor except with consent of District.

6.10. Notifications

6.10.1. Contractor shall notify the Architect and Project Inspector, in writing, of the commencement of construction of each and every aspect of the Work at least 48 hours in advance by submitting form DSA 156 (or current version) to the Project

Inspector. Forms are available on the DSA's website at: http://www.dgs.ca.gov/dsa/Forms.aspx.

6.10.2. Contractor shall notify the Architect and Project Inspector, in writing, of the completion of construction of each and every aspect of the Work at least 48 hours in advance by submitting form DSA 156 (or current version) to the Project Inspector.

6.11. Obtaining of Permits, Licenses and Registration

Contractor shall secure and pay for all permits, licenses, registrations and certificates necessary for prosecution of Work, including but not limited to those listed in the Special Conditions, if any, before the date of the commencement of the Work or before the permits, licenses, registrations and certificates are legally required to continue the Work without interruption. The Contractor shall obtain and pay, only when legally required, for all licenses, registrations, permits, inspections, and inspection certificates required to be obtained from or issued by any authority having jurisdiction over any part of the Work included in the Contract. All final permits, licenses, and certificates shall be delivered to District before demand is made for final payment.

6.12. Royalties and Patents

6.12.1. Contractor shall obtain and pay, only when legally required, all royalties and license fees necessary for prosecution of Work before the earlier of the date of the commencement of the Work or the date that the license is legally required to continue the Work without interruption. Contractor shall defend suits or claims of infringement of patent, copyright, or other rights and shall hold the District, the Architect, and the Construction Manager harmless and indemnify them from loss on account thereof except when a particular design, process, or make or model of product is required by the Contract Documents. However, if the Contractor has reason to believe that the required design, process, or product is an infringement of a patent or copyright, the Contractor shall indemnify and defend the District, Architect and Construction Manager against any loss or damage unless the Contractor promptly informs the District of its information.

6.12.2. The review by the District or Architect of any method of construction, invention, appliance, process, article, device, or material of any kind shall be only its adequacy for the Work and shall not approve use by the Contractor in violation of any patent or other rights of any person or entity.

6.13. Work to Comply With Applicable Laws and Regulations

6.13.1. Contractor shall give all notices and comply with the following specific laws, ordinances, rules, and regulations and all other applicable laws, ordinances, rules, and regulations bearing on conduct of Work as indicated and specified, including but not limited to the appropriate statutes and administrative code sections. If Contractor observes that Drawings and Specifications are at variance therewith, or should Contractor become aware of the development of conditions not covered by Contract Documents that will result in finished Work being at variance

therewith, Contractor shall promptly notify District in writing and any changes deemed necessary by District shall be made as provided in Contract for changes in Work.

6.13.1.1. National Electrical Safety Code, U. S. Department of Commerce
6.13.1.2. National Board of Fire Underwriters' Regulations
6.13.1.3. Uniform Building Code, latest addition, and the California Code of Regulations, title 24, and other amendments
6.13.1.4. Manual of Accident Prevention in Construction, latest edition, published by A.G.C. of America
6.13.1.5. Industrial Accident Commission's Safety Orders, State of California
6.13.1.6. Regulations of the State Fire Marshall (title 19, California Code of Regulations) and Pertinent Local Fire Safety Codes
6.13.1.7. Americans with Disabilities Act
6.13.1.8. Education Code of the State of California
6.13.1.9. Government Code of the State of California
6.13.1.10. Labor Code of the State of California, division 2, part 7, Public Works and Public Agencies
6.13.1.11. Public Contract Code of the State of California
6.13.1.12. California Art Preservation Act
6.13.1.13. U. S. Copyright Act
6.13.1.14. U. S. Visual Artists Rights Act

6.13.2. Contractor shall comply with all applicable mitigation measures, if any, adopted by any public agency with respect to this Project pursuant to the California Environmental Quality Act (Public Resources Code section 21000 et seq.)

6.13.3. If Contractor performs any Work that it knew, or through exercise of reasonable care should have known, to be contrary to any applicable laws, ordinance, rules, or regulations, Contractor shall bear all costs arising therefrom.

6.13.4. Where Specifications or Drawings state that materials, processes, or procedures must be approved by the DSA, State Fire Marshall, or other body or agency, Contractor shall be responsible for satisfying requirements of such bodies or agencies.

6.14. Safety/Protection of Persons and Property

6.14.1. The Contractor will be solely and completely responsible for conditions of the Work Site, including safety of all persons and property during performance of the Work. This requirement will apply continuously and not be limited to normal working hours.

6.14.2. The wearing of hard hats will be mandatory at all times for all personnel on Site. Contractor shall supply sufficient hard hats to properly equip all employees and visitors.

6.14.3. Any construction review of the Contractor's performance is not intended to include review of the adequacy of the Contractor's safety measures in, on, or near the Work Site.

6.14.4. Implementation and maintenance of safety programs shall be the sole responsibility of the Contractor.

6.14.5. The Contractor shall furnish to the District a copy of the Contractor's safety plan within the time frame indicated in the Contract Documents and specifically adapted for the Project.

6.14.6. Contractor shall be responsible for all damages to persons or property that occur as a result of its fault or negligence in connection with the prosecution of this Contract and shall take all necessary measures and be responsible for the proper care and completion and final acceptance by District. All Work shall be solely at Contractor's risk with the exception of damage to the Work caused by "acts of God" as defined in Public Contract Code section 7105.

6.14.7. Contractor shall take, and require Subcontractors to take, all necessary precautions for safety of workers on the Project and shall comply with all applicable federal, state, local, and other safety laws, standards, orders, rules, regulations, and building codes to prevent accidents or injury to persons on, about, or adjacent to premises where Work is being performed and to provide a safe and healthful place of employment. Contractor shall furnish, erect, and properly maintain at all times, all necessary safety devices, safeguards, construction canopies, signs, nets, barriers, lights, and watchmen for protection of workers and the public and shall post danger signs warning against hazards created by such features in the course of construction.

6.14.8. Hazards Control – Contractor shall store volatile wastes in covered metal containers and remove them from the Site daily. Contractor shall prevent accumulation of wastes that create hazardous conditions. Contractor shall provide adequate ventilation during use of volatile or noxious substances.

6.14.9. Contractor shall designate a responsible member of its organization on the Project, whose duty shall be to post information regarding protection and obligations of workers and other notices required under occupational safety and health laws, to comply with reporting and other occupational safety requirements, and to protect the life, safety, and health of workers. Name and position of person so designated shall be reported to District by Contractor.

6.14.10. Contractor shall correct any violations of safety laws, rules, orders, standards, or regulations. Upon the issuance of a citation or notice of violation by the Division of Occupational Safety and Health, Contractor shall correct such violation promptly.

6.14.11. Contractor shall comply with any District storm water requirements that are approved by the District and applicable to the Project, at no additional cost to the District.

6.14.12. In an emergency affecting safety of life or of work or of adjoining property, Contractor, without special instruction or authorization, shall act, at its discretion, to prevent such threatened loss or injury. Any compensation claimed by Contractor on account of emergency work shall be determined by agreement.

6.14.13. All salvage materials will become the property of the Contractor and shall be removed from the Site unless otherwise called for in the Contract Documents. However, the District reserves the right to designate certain items of value that shall be turned over to the District unless otherwise directed by District.

6.14.14. All connections to public utilities and/or existing on-site services shall be made and maintained in such a manner as to not interfere with the continuing use of same by the District during the entire progress of the Work.

6.14.15. Contractor shall provide such heat, covering, and enclosures as are necessary to protect all Work, materials, equipment, appliances, and tools against damage by weather conditions, such as extreme heat, cold, rain, snow, dry winds, flooding, or dampness.

6.14.16. The Contractor shall protect and preserve the Work from all damage or accident, providing any temporary roofs, window and door coverings, boxings, or other construction as required by the Architect. The Contractor shall be responsible for existing structures, walks, roads, trees, landscaping, and/or improvements in working areas; and shall provide adequate protection therefor. If temporary removal is necessary of any of the above items, or damage occurs due to the Work, the Contractor shall replace same at his expense with same kind, quality, and size of Work or item damaged. This shall include any adjoining property of the District and others.

6.14.17. Contractor shall take adequate precautions to protect existing roads, sidewalks, curbs, pavements, utilities, adjoining property, and structures (including, without limitation, protection from settlement or loss of lateral support), and to avoid damage thereto, and repair any damage thereto caused by construction operations.

6.14.18. Contractor shall confine apparatus, the storage of materials, and the operations of workers to limits indicated by law, ordinances, permits, or directions of Architect, and shall not interfere with the Work or unreasonably encumber Premises or overload any structure with materials. Contractor shall enforce all instructions of District and Architect regarding signs, advertising, fires, and smoking, and require that all workers comply with all regulations while on Project Site.

6.14.19. Contractor, Contractor's employees, Subcontractors, Subcontractors' employees, or any person associated with the Work shall conduct themselves in a manner appropriate for a school site. No verbal or physical contact with neighbors, students, and faculty, profanity, or inappropriate attire or behavior will be permitted. District may require Contractor to permanently remove non-complying persons from Project Site.

6.14.20. Contractor shall take care to prevent disturbing or covering any survey markers, monuments, or other devices marking property boundaries or corners. If such markers are disturbed, Contractor shall have a civil engineer, registered as a professional engineer in California, replace them at no cost to District.

6.14.21. In the event that the Contractor enters into any agreement with owners of any adjacent property to enter upon the adjacent property for the purpose of performing the Work, Contractor shall fully indemnify, defend, and hold harmless each person, entity, firm, or agency that owns or has any interest in adjacent property. The form and content of the agreement of indemnification shall be approved by the District prior to the commencement of any Work on or about the adjacent property. The Contractor shall also indemnify the District as provided in the indemnification provision herein. These provisions shall be in addition to any other requirements of the owners of the adjacent property.

6.15. Working Evenings and Weekends

Contractor may be required to work evenings and/or weekends at no additional cost to the District. Contractor shall give the District seventy-two (72) hours notice prior to performing any evening and/or weekend work. Contractor shall perform all evening and/or weekend work only upon District's approval and in compliance with all applicable rules, regulations, laws, and local ordinances including, without limitation, all noise and light limitations. Contractor shall reimburse the District for any Inspector charges necessitated by the Contractor's evening and/or weekend work.

6.16. Cleaning Up

6.16.1. The Contractor shall provide all services, labor, materials, and equipment necessary for protecting the Work, all school occupants, furnishings, equipment, and building structure from damage until its completion and final acceptance by District. Dust barriers shall be provided to isolate dust and dirt from construction operations. At completion of the Work and portions thereof, Contractor shall clean to the original state any areas beyond the Work area that become dust laden as a result of the Work. The Contractor must erect the necessary warning signs and barricades to ensure the safety of all school occupants. The Contractor at all times must maintain good housekeeping practices to reduce the risk of fire damage and must make a fire extinguisher, fire blanket, and/or fire watch, as applicable, available at each location where cutting, braising, soldering, and/or welding is being performed or where there is an increased risk of fire.

6.16.2. Contractor at all times shall keep Premises free from debris such as waste, rubbish, and excess materials and equipment caused by the Work. Contractor shall not leave debris under, in, or about the Premises, but shall promptly remove same from the Premises on a daily basis. If Contractor fails to clean up, District may do so and the cost thereof shall be charged to Contractor. If Contract is for work on an existing facility, Contractor shall also perform specific clean-up on or about the Premises upon request by the District as it deems necessary for the continuing education process. Contractor shall comply with all related provisions of the Specifications.

6.16.3. If the Construction Manager, Architect, or District observes the accumulation of trash and debris, the District will give the Contractor a 24-hour written notice to mitigate the condition.

6.16.4. Should the Contractor fail to perform the required clean-up, or should the clean-up be deemed unsatisfactory by the District, the District will then perform the clean-up. All cost associated with the clean-up work (including all travel, payroll burden, and costs for supervision) will be deducted from the Contract Price, or District may withhold those amounts from payment(s) to Contractor.

7. SUBCONTRACTORS

7.1. Contractor shall provide the District with information for all Subcontracts as indicated in the Contractor's Submittals and Schedules Section herein.

7.2. No contractual relationship exists between the District and any Subcontractor, supplier, or sub-subcontractor by reason of this Contract.

7.3. Contractor agrees to bind every Subcontractor by terms of this Contract as far as those terms are applicable to Subcontractor's work including, without limitation, all labor, wage & hour, apprentice and related provisions and requirements. If Contractor shall subcontract any part of this Contract, Contractor shall be as fully responsible to District for acts and omissions of any Subcontractor and of persons either directly or indirectly employed by any Subcontractor, as it is for acts and omissions of persons directly employed by Contractor. The divisions or sections of the Specifications are not intended to control the Contractor in dividing the Work among Subcontractors or limit the work performed by any trade.

7.4. District's consent to, or approval of, or failure to object to, any Subcontractor under this Contract shall not in any way relieve Contractor of any obligations under this Contract and no such consent shall be deemed to waive any provisions of this Contract.

7.5. Contractor is directed to familiarize itself with sections 4100 through 4114 of the Public Contract Code of the State of California, as regards subletting and subcontracting, and to comply with all applicable requirements therein. In addition, Contractor is directed to familiarize itself with sections 1720 through 1861 of the Labor Code of the State of California, as regards the payment of prevailing wages and related issues, and to comply with all applicable requirements therein all including, without limitation, section 1775 and the Contractor's and Subcontractors' obligations and liability for violations of prevailing wage law and other applicable laws.

7.6. No Contractor whose Bid is accepted shall, without consent of the awarding authority and in full compliance with section 4100, et seq. of the Public Contract Code, and section 1771.1 of the Labor Code, including, without limitation, sections 4107, 4107.5, and 4109 of the Public Contract Code, either:

7.6.1. Substitute any person as a Subcontractor in place of the Subcontractor designated in the original Bid; or

7.6.2. Permit any Subcontract to be assigned or transferred, or allow any portion of the Work to be performed by anyone other than the original Subcontractor listed in the Bid; or

7.6.3. Sublet or subcontract any portion of the Work in excess of one-half of one percent (0.5%) of the Contractor's total bid as to which his original bid did not designate a Subcontractor.

7.7. The Contractor shall be responsible for the coordination of the trades, Subcontractors, sub-subcontractors, and material or equipment suppliers working on the Project.

7.7.1. [Reserved].

7.7.2. Contractor is responsible for ensuring that all Subcontractors are properly registered as public works contractors by the Department of Industrial Relations.

7.8. Contractor is solely responsible for settling any differences between the Contractor and its Subcontractor(s) or between Subcontractors.

7.9. Contractor must include in all of its subcontracts the assignment provisions as indicated in the Termination section of these General Conditions.

8. OTHER CONTRACTS/CONTRACTORS

8.1. District reserves the right to let other contracts, and/or to perform work with its own forces, in connection with the Project. Contractor shall afford other contractors reasonable opportunity for introduction and storage of their materials and execution of their work and shall properly coordinate and connect Contractor's Work with the work of other contractors.

8.2. In addition to Contractor's obligation to protect its own Work, Contractor shall protect the work of any other contractor that Contractor encounters while working on the Project.

8.3. If any part of Contractor's Work depends for proper execution or results upon work of District or any other contractor, the Contractor shall inspect and promptly report to the District in writing before proceeding with its Work any defects in District's or any other contractor's work that render Contractor's Work unsuitable for proper execution and results. Contractor shall be held accountable for damages to District for District's or any other contractor's work that Contractor failed to inspect or should have inspected. Contractor's failure to inspect and report shall constitute Contractor's acceptance of all District's or any other contractor's work as fit and proper for reception of Contractor's Work, except as to defects that may develop in District's or any other contractor's work after execution of Contractor's Work.

8.4. To ensure proper execution of its subsequent work, Contractor shall measure and inspect work already in place and shall at once report to the District in writing any discrepancy between that executed work and the Contract Documents.

8.5. Contractor shall ascertain to its own satisfaction the scope of the Project and nature of District's or any other contracts that have been or may be awarded by District in prosecution of the Project to the end that Contractor may perform this Contract in light of the other contracts, if any.

8.6. Nothing herein contained shall be interpreted as granting to Contractor exclusive occupancy of the Site, the Premises, or of the Project. Contractor shall not cause any unnecessary hindrance or delay to the use and/or school operation(s) of the Premises and/or to District or any other contractor working on the Project. If simultaneous execution of any contract or school operation is likely to cause interference with performance of Contractor's Contract, Contractor shall coordinate with those contractor(s), person(s), and/or entity(s) and shall notify the District of the resolution.

9. DRAWINGS AND SPECIFICATIONS

9.1. A complete list of all Drawings that form a part of the Contract is to be found as an index on the Drawings themselves, and/or may be provided to the Contractor and/or in the Table of Contents.

9.2. Materials or Work described in words that so applied have a well known technical or trade meaning shall be deemed to refer to recognized standards, unless noted otherwise.

9.3. Trade Name or Trade Term. It is not the intention of this Contract to go into detailed descriptions of any materials and/or methods commonly known to the trade under "trade name" or "trade term." The mere mention or notation of "trade name" or "trade term" shall be considered a sufficient notice to Contractor that it will be required to complete the work so named, complete, finished, and operable, with all its appurtenances, according to the best practices of the trade.

9.4. The naming of any material and/or equipment shall mean furnishing and installing of same, including all incidental and accessory items thereto and/or labor therefor, as per best practices of the trade(s) involved, unless specifically noted otherwise.

9.5. Contract Documents are complementary, and what is called for by one shall be binding as if called for by all. As such, Drawings and Specifications are intended to be fully cooperative and to agree. However, if Contractor observes that Drawings and Specifications are in conflict, Contractor shall promptly notify District and Architect in writing, and any necessary changes shall be made as provided in the Contract Documents.

9.6. In the case of discrepancy or ambiguity in the Contract Documents, the order of precedence in the Agreement shall prevail. However, in the case of discrepancy or ambiguity solely between and among the Drawings and Specifications, the discrepancy or ambiguity shall be resolved in favor of the interpretation that will provide District with the functionally complete and operable Project described in the Drawings and Specifications. In case of ambiguity, conflict, or lack of information, District will furnish clarifications with reasonable promptness.

9.7. Drawings and Specifications are intended to comply with all laws, ordinances, rules, and regulations of constituted authorities having jurisdiction, and where referred to in the Contract Documents, the laws, ordinances, rules, and regulations shall be

considered as a part of the Contract within the limits specified. Contractor shall bear all expense of correcting work done contrary to said laws, ordinances, rules, and regulations.

9.8. Ownership of Drawings

All copies of Plans, Drawings, Designs, Specifications, and copies of other incidental architectural and engineering work, or copies of other Contract Documents furnished by District, are the property of District. They are not to be used by Contractor in other work and, with the exception of signed sets of Contract Documents, are to be returned to District on request at completion of Work, or may be used by District as it may require without any additional costs to District. Neither the Contractor nor any Subcontractor, or material or equipment supplier shall own or claim a copyright in the Drawings, Specifications, and other documents prepared by the Architect. District hereby grants the Contractor, Subcontractors, sub-subcontractors, and material or equipment suppliers a limited license to use applicable portions of the Drawings prepared for the Project in the execution of their Work under the Contract Documents.

10. CONTRACTOR'S SUBMITTALS AND SCHEDULES

Contractor's submittals shall comply with the provisions and requirements of the Specifications including, without limitation Submittals.

10.1. Schedule of Work, Schedule of Submittals, and Schedule of Values

10.1.1. Within **TEN (10)** calendar days after the date of the Notice to Award (unless otherwise specified in the Specifications), the Contractor shall prepare and submit to the District for review, in a form supported by sufficient data to substantiate its accuracy as the District may require:

10.1.1.1. Preliminary Schedule. A preliminary schedule of construction indicating the starting and completion dates of the various stages of the Work, including any information and following any form as may be specified in the Specifications. Once approved by District, this shall become the Construction Schedule. This schedule shall include and identify all tasks that are on the Project's critical path with a specific determination of the start and completion of each critical path task as well as all Contract milestones and each milestone's completion date(s) as may be required by the District.

10.1.1.2. Preliminary Schedule of Values. A preliminary schedule of values for all of the Work, which must include quantities and prices of items aggregating the Contract Price and must subdivide the Work into component parts in sufficient detail to serve as the basis for progress payments during construction. Unless the Special Conditions contain different limits, this preliminary schedule of values shall include, at a minimum, the following information and the following structure:

10.1.1.2.1. Divided into at least the following categories:

10.1.1.2.1.1. Overhead and profit;

10.1.1.2.1.2. Supervision;
10.1.1.2.1.3. General conditions;
10.1.1.2.1.4. Layout;
10.1.1.2.1.5. Mobilization;
10.1.1.2.1.6. Submittals;
10.1.1.2.1.7. Bonds and insurance;
10.1.1.2.1.8. Close-out/Certification documentation;
10.1.1.2.1.9. Demolition;
10.1.1.2.1.10. Installation;
10.1.1.2.1.11. Rough-in;
10.1.1.2.1.12. Finishes;
10.1.1.2.1.13. Testing;
10.1.1.2.1.14. Punchlist and acceptance.

10.1.1.2.2. Divided by each of the following areas:

10.1.1.2.2.1. Site work;
10.1.1.2.2.2. By each building;
10.1.1.2.2.3. By each floor.

10.1.1.2.3. The preliminary schedule of values shall not provide for values any greater than the following percentages of the Contract value:

10.1.1.2.3.1. Mobilization and layout combined to equal not more than 1%;
10.1.1.2.3.2. Submittals, samples and shop drawings combined to equal not more than 3%;
10.1.1.2.3.3. Bonds and insurance combined to equal not more than 2%.

10.1.1.2.4. Closeout documentation shall have a value in the preliminary schedule of not less than 5%.

10.1.1.2.5. Notwithstanding any provision of the Contract Documents to the contrary, payment of the Contractor's overhead, supervision, general conditions costs, and profit, as reflected in the Cost Breakdown, shall be paid based on percentage complete, with the disbursement of Progress Payments and the Final Payment.

10.1.1.2.6. Contractor shall certify that the preliminary schedule of values as submitted to the District is accurate and reflects the costs as developed in preparing Contractor’s bid. The preliminary schedule of values shall be subject to the District's review and approval of the form and content thereof. In the event that the District objects to any portion of the preliminary schedule of values, the District shall notify the Contractor, in writing, of the District's objection(s) to the preliminary schedule of values. Within five (5) calendar days of the date of the District's written objection(s), Contractor shall submit a revised preliminary schedule of values to the District for review and approval. The foregoing procedure for the preparation, review and approval of

the preliminary schedule of values shall continue until the District has approved the entirety of the preliminary schedule of values.

10.1.1.2.7. Once the preliminary schedule of values is approved by the District, this shall become the Schedule of Values. The Schedule of Values shall not be thereafter modified or amended by the Contractor without the prior consent and approval of the District, which may be granted or withheld in the sole discretion of the District.

10.1.1.3. Preliminary Schedule of Submittals. A preliminary schedule of submittals, including Shop Drawings, Product Data, and Samples submittals. Once approved by District, this shall become the Submittal Schedule. All submittals shall be forwarded to the District by the date indicated on the approved Submittal Schedule, unless an earlier date is necessary to maintain the Construction Schedule, in which case those submittals shall be forwarded to the District so as not to delay the Construction Schedule. Upon request by the District, Contractor shall provide an electronic copy of all submittals to the District.

10.1.1.4. Safety Plan. Contractor's Safety Plan specifically adapted for the Project. Contractor's Safety Plan shall comply with the following requirements:

10.1.1.4.1. All applicable requirements of California Division of Industrial Safety ("CalOSHA") and/or of the United States Occupational Safety and Health Administration ("OSHA").

10.1.1.4.2. All provisions regarding Project safety, including all applicable provisions in these General Conditions.

10.1.1.4.3. Contractor's Safety Plan shall be in English and in the language(s) of the Contractor's and its Subcontractors' employees.

10.1.1.5. Complete Subcontractor List. The name, address, telephone number, facsimile number, California State Contractors License number, classification, and monetary value of all Subcontracts for parties furnishing labor, material, or equipment for completion of the Project.

10.1.2. Contractor must provide all schedules both in hard copy and electronically, in a format (e.g., Microsoft Project or Primavera) approved in advance by the District.

10.1.3. The District will review the schedules submitted and the Contractor shall make changes and corrections in the schedules as requested by the District and resubmit the schedules until approved by the District.

10.1.4. The District shall have the right at any time to revise the schedule of values if, in the District's sole opinion, the schedule of values does not accurately reflect the value of the Work performed.

10.1.5. All submittals and schedules must be approved by the District before Contractor can rely on them as a basis for payment.

10.2. Monthly Progress Schedule(s)

10.2.1. Contractor shall provide Monthly Progress Schedule(s) to the District. A Monthly Progress Schedule shall update the approved Construction Schedule or the last Monthly Progress Schedule, showing all work completed and to be completed. The monthly Progress Schedule shall be sent within the timeframe requested by the District and shall be in a format acceptable to the District and contain a written narrative of the progress of work that month and any changes, delays, or events that may affect the work. The process for District approval of the Monthly Progress Schedule shall be the same as the process for approval of the Construction Schedule.

10.2.2. Contractor shall submit Monthly Progress Schedule(s) with all payment applications.

10.3. Material Safety Data Sheets (MSDS)

Contractor is required to ensure Material Safety Data Sheets are available in a readily accessible place at the Work Site for any material requiring a Material Safety Data Sheet per the Federal "Hazard Communication" standard, or employees right to know law. The Contractor is also required to ensure proper labeling on substance brought onto the job site and that any person working with the material or within the general area of the material is informed of the hazards of the substance and follows proper handling and protection procedures. Two additional copies of the Material Safety Data Sheets shall also be submitted directly to the District.

11. SITE ACCESS, CONDITIONS, AND REQUIREMENTS

11.1. Site Investigation

Before bidding on this Work, Contractor shall make a careful investigation of the Site and thoroughly familiarize itself with the requirements of the Contract. By the act of submitting a bid for the Work included in this Contract, Contractor shall be deemed to have made a complete study and investigation, and to be familiar with and accepted the existing conditions of the Site.

Prior to commencing the Work, Contractor and the District's representative shall survey the Site to document the condition of the Site. Contractor will record the survey in digital videotape format and provide an electronic copy to the District within fourteen (14) days of the survey. This electronic record shall serve as a basis for determining any damages caused by the Contractor during the Project. The Contractor may also document any pre-existing conditions in writing, provided that both the Contractor and the District's representative agree on said conditions and sign a memorandum documenting the same.

11.2. Soils Investigation Report

11.2.1. When a soils investigation report obtained from test holes at Site is available, that report shall be available to the Contractor but shall not be a part of this Contract. Any information obtained from that report or any information given on Drawings as to subsurface soil condition or to elevations of existing grades or elevations of underlying rock is approximate only, is not guaranteed, does not form a part of this Contract, and Contractor may not rely thereon. By submitting its bid, Contractor acknowledges that it has made visual examination of Site and has made whatever tests Contractor deems appropriate to determine underground condition of soil.

11.2.2. Contractor agrees that no claim against District will be made by Contractor for damages and hereby waives any rights to damages if, during progress of Work, Contractor encounters subsurface or latent conditions at Site materially differing from those shown on Drawings or indicated in Specifications, or for unknown conditions of an unusual nature that differ materially from those ordinarily encountered in the work of the character provided for in Plans and Specifications, except as indicated in the provisions of these General Conditions regarding trenches, trenching, and/or existing utility lines.

11.3. Access to Work

District and its representatives shall at all times have access to Work wherever it is in preparation or progress, including storage and fabrication. Contractor shall provide safe and proper facilities for such access so that District's representatives may perform their functions.

11.4. Layout and Field Engineering

11.4.1. All field engineering required for layout of this Work and establishing grades for earthwork operations shall be furnished by Contractor at its expense. This Work shall be done by a qualified, California-registered civil engineer approved in writing by District and Architect. Any required Record and/or As-Built Drawings of Site development shall be prepared by the approved civil engineer.

11.4.2. The Contractor shall be responsible for having ascertained pertinent local conditions such as location, accessibility, and general character of the Site and for having satisfied itself as to the conditions under which the Work is to be performed. Contractor shall follow best practices, including but not limited to pot holing to avoid utilities. District shall not be liable for any claim for allowances because of Contractor’s error, failure to follow best practices, or negligence in acquainting itself with the conditions at the Site.

11.4.3. Contractor shall protect and preserve established benchmarks and monuments and shall make no changes in locations without the prior written approval of District. Contractor shall replace any benchmarks or monuments that are lost or destroyed subsequent to proper notification of District and with District's approval.

11.5. Utilities

Utilities shall be provided as indicated in the Specifications.

11.6. Sanitary Facilities

Sanitary facilities shall be provided as indicated in the Specifications.

11.7. Surveys

Contractor shall provide surveys done by a California-licensed civil engineer surveyor to determine locations of construction, grading, and site work as required to perform the Work.

11.8. Regional Notification Center

The Contractor, except in an emergency, shall contact the appropriate regional notification center at least two (2) days prior to commencing any excavation if the excavation will be conducted in an area or in a private easement that is known, or reasonably should be known, to contain subsurface installations other than the underground facilities owned or operated by the District, and obtain an inquiry identification number from that notification center. No excavation shall be commenced and/or carried out by the Contractor unless an inquiry identification number has been assigned to the Contractor or any Subcontractor and the Contractor has given the District the identification number. Any damages arising from Contractor's failure to make appropriate notification shall be at the sole risk and expense of the Contractor. Any delays caused by failure to make appropriate notification shall be at the sole risk of the Contractor and shall not be considered for an extension of the Contract time.

11.9. Existing Utility Lines

11.9.1. Pursuant to Government Code section 4215, District assumes the responsibility for removal, relocation, and protection of main or trunk utility lines and facilities located on the construction Site at the time of commencement of construction under this Contract with respect to any such utility facilities that are not identified in the Plans and Specifications. Contractor shall not be assessed for liquidated damages for delay in completion of the Project caused by failure of District or the owner of a utility to provide for removal or relocation of such utility facilities.

11.9.2. Locations of existing utilities provided by District shall not be considered exact, but approximate within reasonable margin and shall not relieve Contractor of responsibilities to exercise reasonable care costs of repair due to Contractor’s failure to do so. District shall compensate Contractor for the costs of locating, repairing damage not due to the failure of Contractor to exercise reasonable care, and removing or relocating such utility facilities not indicated in the Plans and Specifications with reasonable accuracy, and for equipment necessarily idle during such work.

11.9.3. No provision herein shall be construed to preclude assessment against Contractor for any other delays in completion of the Work. Nothing in this Article shall be deemed to require District to indicate the presence of existing service laterals, appurtenances, or other utility lines, within the exception of main or trunk

utility lines. Whenever the presence of these utilities on the Site of the construction Project can be inferred from the presence of other visible facilities, such as buildings, meter junction boxes, on or adjacent to the Site of the construction.

11.9.4. If Contractor, while performing Work under this Contract, discovers utility facilities not identified by District in Contract Plans and Specifications, Contractor shall immediately notify the District and the utility in writing. The cost of repair for damage to above-mentioned visible facilities without prior written notification to the District shall be borne by the Contractor.

11.10. Notification

Contractor understands, acknowledges and agrees that the purpose for prompt notification to the District pursuant to these provisions is to allow the District to investigate the condition(s) so that the District shall have the opportunity to decide how the District desires to proceed as a result of the condition(s). Accordingly, failure of Contractor to promptly notify the District in writing, pursuant to these provisions, shall constitute Contractor's waiver of any claim for damages or delay incurred as a result of the condition(s).

11.11. Hazardous Materials

Contractor shall comply with all provisions and requirements of the Contract Documents related to hazardous materials including, without limitation, Hazardous Materials Procedures and Requirements.

11.12. No Signs

Neither the Contractor nor any other person or entity shall display any signs not required by law or the Contract Documents at the Site, fences trailers, offices, or elsewhere on the Site without specific prior written approval of the District.

12. TRENCHES

12.1. Trenches Greater Than Five Feet

Pursuant to Labor Code section 6705, if the Contract Price exceeds $25,000 and involves the excavation of any trench or trenches five (5) feet or more in depth, the Contractor shall, in advance of excavation, promptly submit to the District and/or a registered civil or structural engineer employed by the District or Architect, a detailed plan, stamped by a licensed engineer retained by the Contractor, showing the design of shoring for protection from the hazard of caving ground during the excavation of such trench or trenches.

12.2. Excavation Safety

If such plan varies from the Shoring System Standards established by the Construction Safety Orders, the plan shall be prepared by a registered civil or structural engineer, but in no case shall such plan be less effective than that required by the Construction Safety Orders. No excavation of such trench or trenches shall be commenced until said

plan has been accepted by the District or by the person to whom authority to accept has been delegated by the District.

12.3. No Tort Liability of District

Pursuant to Labor Code section 6705, nothing in this Article shall impose tort liability upon the District or any of its employees.

12.4. No Excavation Without Permits

The Contractor shall not commence any excavation Work until it has secured all necessary permits including the required CAL OSHA excavation/shoring permit. Any permits shall be prominently displayed on the Site prior to the commencement of any excavation.

12.5. Discovery of Hazardous Waste and/or Unusual Conditions

12.5.1. Pursuant to Public Contract Code section 7104, if the Work involves digging trenches or other excavations that extend deeper than four feet below the Surface, the Contractor shall promptly, and before the following conditions are disturbed, notify the District, in writing, of any:

12.5.1.1. Material that the Contractor believes may be material that is hazardous waste, as defined in section 25117 of the Health and Safety Code, is required to be removed to a Class I, Class II, or Class III disposal site in accordance with provisions of existing law.

12.5.1.2. Subsurface or latent physical conditions at the Site differing from those indicated.

12.5.1.3. Unknown physical conditions at the Site of any unusual nature, different materially from those ordinarily encountered and generally recognized as inherent in work of the character provided for in the Contract.

12.5.2. The District shall promptly investigate the conditions, and if it finds that the conditions do materially so differ, or do involve hazardous waste, and cause a decrease or increase in the Contractor's cost of, or the time required for, performance of any part of the Work, shall issue a Change Order under the procedures described herein.

12.5.3. In the event that a dispute arises between District and the Contractor whether the conditions materially differ, or involve hazardous waste, or cause a decrease or increase in the Contractor's cost of, or time required for, performance of any part of the Work, the Contractor shall not be excused from any scheduled completion date provided for by the Contract, but shall proceed with all work to be performed under the Contract. The Contractor shall retain any and all rights provided either by Contract or by law that pertain to the resolution of disputes and protests.

13. INSURANCE AND BONDS

13.1. Insurance

Unless different provisions and/or limits are indicated in the Special Conditions, all insurance required of Contractor and/or its Subcontractor(s) shall be in the amounts and include the provisions set forth herein.

13.1.1. Commercial General Liability and Automobile Liability Insurance

13.1.1.1. Contractor shall procure and maintain, during the life of this Contract, Commercial General Liability Insurance and Automobile Liability Insurance that shall protect Contractor, District, State, Construction Manager(s), Project Inspector(s), and Architect(s) from all claims for bodily injury, property damage, personal injury, death, advertising injury, and medical payments arising from operations under this Contract. This coverage shall be provided in a form at least as broad as Insurance Services (ISO) Form CG 0001 11188. Contractor shall ensure that Products Liability and Completed Operations coverage, Fire Damage Liability, and Any Auto including owned, non-owned, and hired, are included within the above policies and at the required limits, or Contractor shall procure and maintain these coverages separately.

13.1.1.2. Contractor's deductible or self-insured retention for its Commercial General Liability Insurance policy shall not exceed $25,000 unless approved in writing by District.

13.1.1.3. All such policies shall be written on an occurrence form.

13.1.2. Excess Liability Insurance

13.1.2.1. Contractor may procure and maintain, during the life of this Contract, an Excess Liability Insurance Policy to meet the policy limit requirements of the required policies if Contractor's underlying policy limits are less than required.

13.1.2.2. There shall be no gap between the per occurrence amount of any underlying policy and the start of the coverage under the Excess Liability Insurance Policy. Any Umbrella or Excess Liability Insurance Policy shall be written on a following form and shall protect Contractor, District, State, Construction Manager(s), Project Manager(s), and Architect(s) in amounts and including the provisions as set forth in the Supplementary Conditions (if any) and/or Special Conditions, and that complies with all requirements for Commercial General Liability and Automobile Liability and Employers' Liability Insurance.

13.1.3. Subcontractor(s): Contractor shall require its Subcontractor(s), if any, to procure and maintain Commercial General Liability Insurance, Automobile Liability Insurance, and Excess Liability Insurance (if Subcontractor elects to satisfy, in part the insurance required herein by procuring and maintaining an Excess Liability

Insurance Policy) with forms of coverage and limits equal to the amounts required of the Contractor.

13.1.4. Workers' Compensation and Employers' Liability Insurance

13.1.4.1. In accordance with provisions of section 3700 of the California Labor Code, the Contractor and every Subcontractor shall be required to secure the payment of compensation to its employees.

13.1.4.2. Contractor shall procure and maintain, during the life of this Contract, Workers' Compensation Insurance and Employers' Liability Insurance for all of its employees engaged in work under this Contract, on/or at the Site of the Project. This coverage shall cover, at a minimum, medical and surgical treatment, disability benefits, rehabilitation therapy, and survivors' death benefits. Contractor shall require its Subcontractor(s), if any, to procure and maintain Workers' Compensation Insurance and Employers' Liability Insurance for all employees of Subcontractor(s). Any class of employee or employees not covered by a Subcontractor's insurance shall be covered by Contractor's insurance. If any class of employee or employee engaged in Work under this Contract, on or at the Site of the Project, is not protected under the Workers' Compensation Insurance, Contractor shall provide, or shall cause a Subcontractor to provide, adequate insurance coverage for the protection of any employee(s) not otherwise protected before any of those employee(s) commence work.

13.1.5. Builder's Risk Insurance: Builder's Risk "All Risk" Insurance

Contractor shall procure and maintain, during the life of this Contract, Builder's Risk (Course of Construction), or similar first party property coverage acceptable to the District, issued on a replacement cost value basis. The cost shall be consistent with the total replacement cost of all insurable Work of the Project included within the Contract Documents. Coverage is to insure against all risks of accidental physical loss and shall include without limitation the perils of vandalism and/or malicious mischief (both without any limitation regarding vacancy or occupancy), sprinkler leakage, civil authority, theft, sonic disturbance, earthquake, flood, collapse, wind, fire, war, terrorism, lightning, smoke, and rioting. Coverage shall include debris removal, demolition, increased costs due to enforcement of all applicable ordinances and/or laws in the repair and replacement of damaged and undamaged portions of the property, and reasonable costs for the Architect's and engineering services and expenses required as a result of any insured loss upon the Work and Project, including completed Work and Work in progress, to the full insurable value thereof.

13.1.6. Pollution Liability Insurance

13.1.6.1. Contractor shall procure and maintain Pollution Liability Insurance that shall protect Contractor, District, State, Construction Manager(s), Project Inspector(s), and Architect(s) from all claims for bodily injury, property damage, including natural resource damage, cleanup costs, removal, storage, disposal, and/or use of the pollutant arising from operations under this Contract, and defense, including costs and expenses incurred in the investigation, defense, or settlement of claims. Coverage shall apply to sudden and/or gradual pollution

conditions resulting from the escape or release of smoke, vapors, fumes, acids, alkalis, toxic chemicals, liquids, or gases, natural gas, waste materials, or other irritants, contaminants, or pollutants, including asbestos. This coverage shall be provided in a form at least as broad as Insurance Services (ISO) Form CG 2415, or Contractor shall procure and maintain these coverages separately.

13.1.6.2. Contractor shall warrant that any retroactive date applicable to coverage under the policy predates the effective date of the Contract and that continuous coverage will be maintained or an extended reporting or discovery period will be exercised for a period of three (3) years, beginning from the time that the Work under the Contract is completed.

13.1.6.3. If Contractor is responsible for removing any pollutants from a site, then Contractor shall ensure that Any Auto, including owned, non-owned, and hired, are included within the above policies and at the required limits, to cover its automobile exposure from transporting the pollutants from the site to an approved disposal site. This coverage shall include the Motor Carrier Act Endorsement, MCS 90.

13.1.7. Proof of Carriage of Insurance and Other Requirements: Endorsements and Certificates

13.1.7.1. Contractor shall not commence Work nor shall it allow any Subcontractor to commence Work under this Contract, until Contractor and its Subcontractor(s) have procured all required insurance and Contractor has delivered in duplicate to the District complete endorsements (or entire insurance policies) and certificates indicating the required coverages have been obtained, and the District has approved these documents.

13.1.7.2. Endorsements, certificates, and insurance policies shall include the following:

13.1.7.2.1. A clause stating:

"This policy shall not be amended, canceled or modified and the coverage amounts shall not be reduced until notice has been mailed to District, Architect, and Construction Manager stating date of amendment, modification, cancellation or reduction. Date of amendment, modification, cancellation or reduction may not be less than thirty (30) days after date of mailing notice."

13.1.7.2.2. Language stating in particular those insured, extent of insurance, location and operation to which insurance applies, expiration date, to whom cancellation and reduction notice will be sent, and length of notice period.

13.1.7.3. All endorsements, certificates and insurance policies shall state that District, its trustees, employees and agents, the State of California, Construction Manager(s), Project Manager(s), Inspector(s) and Architect(s) are named

additional insureds under all policies except Workers' Compensation Insurance and Employers' Liability Insurance.

13.1.7.4. Insurance written on a "claims made" basis is to be renewed by the Contractor and all Subcontractors for a period of five (5) years following completion of the Work or termination of this Agreement. Such insurance must have the same coverage and limits as the policy that was in effect during the term of this Agreement, and will cover the Contractor and all Subcontractors for all claims made.

13.1.7.5. Contractor's and Subcontractors' insurance policy(s) shall be primary and non-contributory to any insurance or self-insurance maintained by District, its trustees, employees and/or agents, the State of California, Construction Manager(s), Project Manager(s), Inspector(s), and/or Architect(s).

13.1.7.6. All endorsements shall waive any right to subrogation against any of the named additional insureds.

13.1.7.7. Unless otherwise stated in the Special Conditions, all of Contractor's insurance shall be with insurance companies with an A.M. Best rating of no less than **A: VII.**

13.1.7.8. The insurance requirements set forth herein shall in no way limit the Contractor's liability arising out of or relating to the performance of the Work or related activities.

13.1.7.9. Failure of Contractor and/or its Subcontractor(s) to comply with the insurance requirements herein shall be deemed a material breach of the Agreement.

13.1.8. Insurance Policy Limits

.

Unless different limits are indicated in the Special Conditions, the limits of insurance shall not be less than the following amounts:

Commercial General Liability	Product Liability and Completed Operations, Fire Damage Liability – Split Limit	**$2,000,000 per occurrence; $4,000,000 aggregate**
Automobile Liability – Any Auto	Combined Single Limit	$1,000,000
Workers Compensation		Statutory limits pursuant to State law
Employers' Liability		$1,000,000
Builder's Risk (Course of Construction)		Issued for the value and scope of Work indicated herein.
Pollution Liability		$1,000,000 per claim; $2,000,000 aggregate

13.2. Contract Security - Bonds

13.2.1. Contractor shall furnish two surety bonds issued by a California admitted surety insurer as follows:

13.2.1.1. Performance Bond: A bond in an amount at least equal to one hundred percent (100%) of Contract Price as security for faithful performance of this Contract.

13.2.1.2. Payment Bond: A bond in an amount at least equal to one hundred percent (100%) of the Contract Price as security for payment of persons performing labor and/or furnishing materials in connection with this Contract.

13.2.2. Cost of bonds shall be included in the Bid and Contract Price.

13.2.3. All bonds related to this Project shall be in the forms set forth in these Contract Documents and shall comply with all requirements of the Contract Documents, including, without limitation, the bond forms.

14. WARRANTY/GUARANTEE/INDEMNITY

14.1. Warranty/Guarantee

14.1.1. The Contractor shall obtain and preserve for the benefit of the District, manufacturer's warranties on materials, fixtures, and equipment incorporated into the Work.

14.1.2. In addition to guarantees required elsewhere, Contractor shall, and hereby does guarantee and warrant all Work furnished on the job against all defects for a period of **ONE (1)** year after the later of the following dates:

14.1.2.1. The date of completion as defined in Public Contract Code section 7107, subdivision (c), or

14.1.2.2. The commissioning date for the Project, if any.

At the District's sole option, Contractor shall repair or replace any and all of that Work, together with any other Work that may be displaced in so doing, that may prove defective in workmanship and/or materials within a **ONE (1)** year period from date of completion as defined above without expense whatsoever to District. In the event of failure of Contractor and/or Surety to commence and pursue with diligence said replacements or repairs within ten (10) days after being notified in writing, Contractor and Surety hereby acknowledge and agree that District is authorized to proceed to have defects repaired and made good at expense of Contractor and/or Surety who hereby agree to pay costs and charges therefore immediately on demand.

14.1.3. If, in the opinion of District, defective work creates a dangerous condition or requires immediate correction or attention to prevent further loss to District or to prevent interruption of operations of District, District will attempt to give the notice required above. If Contractor or Surety cannot be contacted or neither complies with District's request for correction within a reasonable time as determined by District, District may, notwithstanding the above provision, proceed to make any and all corrections and/or provide attentions the District believes are necessary. The costs of correction or attention shall be charged against Contractor and Surety of the guarantees provided in this Article or elsewhere in this Contract.

14.1.4. The above provisions do not in any way limit the guarantees on any items for which a longer guarantee is specified or on any items for which a manufacturer gives a guarantee for a longer period. Contractor shall furnish to District all appropriate guarantee or warranty certificates as indicated in the Specifications or upon request by District.

14.1.5. Nothing herein shall limit any other rights or remedies available to District.

14.2. Indemnity

14.2.1. To the furthest extent permitted by California law, the Contractor shall indemnify, defend with legal counsel reasonably acceptable to the District, keep and hold harmless the District, the Architect, and the Construction Manager, their consultants and separate contractors, and their respective board members, officers, representatives, contractors, agents, and employees, in both individual and official capacities ("Indemnitees"), against all suits, claims, damages, losses, and expenses, including but not limited to attorney's fees, caused by, arising out of, resulting from, or incidental to, the performance of the Work under this Contract by the Contractor, its Subcontractors, vendors, or suppliers, except to the extent caused by the sole negligence, active negligence, or willful misconduct of the Indemnitees, and/or to

any extent that would render these provisions void or unenforceable. This agreement and obligation of the Contractor shall not be construed to negate, abridge, or otherwise reduce any right or obligation of indemnity that would otherwise exist as to any party or person described herein. This indemnification, defense, and hold harmless obligation includes any failure or alleged failure by Contractor to comply with any provision of law, any failure or alleged failure to timely and properly fulfill all of its obligations under the Contract Documents in strict accordance with their terms, and without limitation, any stop payment notice actions or liens, including Civil Wage and Penalty Assessments and/or Orders by the California Department of Industrial Relations.

14.2.2. The Contractor shall give prompt notice to the District in the event of any injury (including death), loss, or damage included herein. Without limitation of the provisions herein, if the Contractor's agreement to indemnify, defend, and hold harmless the Indemnitees as provided herein shall be determined to be void or unenforceable, in whole or in part, it is the intention of the parties that these circumstances shall not otherwise affect the validity or enforceability of the Contractor's agreement to indemnify, defend, and hold harmless the rest of the Indemnitees, as provided herein. Further, the Contractor shall be and remain fully liable on its agreements and obligations herein to the full extent permitted by law.

14.2.3. In any and all claims against any of the Indemnitees by any employee of the Contractor, any Subcontractor, anyone directly or indirectly employed by any of them or anyone for whose acts any of them may be liable, the Contractor's indemnification obligation herein shall not be limited in any way by any limitation on the amount or type of damages, compensation, or benefits payable by or for the Contractor or any Subcontractor under workers' compensation acts, disability benefit acts, or other employee benefit acts.

14.2.4. The District may retain so much of the moneys due the Contractor as shall be considered necessary, until disposition of any such suit, claims or actions for damages or until the District, Architect and Construction Manager have received written agreement from the Contractor that they will unconditionally defend the District, Architect and Construction Manager, their officers, agents and employees, and pay any damages due by reason of settlement or judgment.

14.2.5. The defense and indemnification obligations hereunder shall survive the completion of Work, including the warranty/guarantee period, and/or the termination of the Agreement.

15. TIME

15.1. Notice to Proceed

15.1.1. District may issue a Notice to Proceed within three (3) months from the date of the Notice of Award. Once Contractor has received the Notice to Proceed, Contractor shall complete the Work within the period of time indicated in the Contract Documents.

15.1.2. In the event that the District desires to postpone issuing the Notice to Proceed beyond this 3-month period, it is expressly understood that with reasonable notice to the Contractor, the District may postpone issuing the Notice to Proceed. It is further expressly understood by Contractor that Contractor shall not be entitled to any claim of additional compensation as a result of the postponement of the issuance of the Notice to Proceed.

15.1.3. If the Contractor believes that a postponement of issuance of the Notice to Proceed will cause a hardship to Contractor, Contractor may terminate the Contract. Contractor's termination due to a postponement shall be by written notice to District within ten (10) days after receipt by Contractor of District's notice of postponement. It is further understood by Contractor that in the event that Contractor terminates the Contract as a result of postponement by the District, the District shall only be obligated to pay Contractor for the Work that Contractor had performed at the time of notification of postponement. Should Contractor terminate the Contract as a result of a notice of postponement, District shall have the authority to award the Contract to the next lowest responsive responsible bidder.

15.2. Computation of Time / Adverse Weather

15.2.1. The Contractor will only be allowed a time extension for Adverse Weather conditions if requested by Contractor and only if all of the following conditions are met:

15.2.1.1. The weather conditions constitute Adverse Weather, as defined herein and further specified in the Special Conditions;

15.2.1.2. Contractor can verify that the Adverse Weather caused delays in excess of five hours of the indicated labor required to complete the scheduled tasks of Work on the day affected by the Adverse Weather;

15.2.1.3. The Contractor's crew is dismissed as a result of the Adverse Weather;

15.2.1.4. Said delay adversely affects the critical path in the Construction Schedule; and

15.2.1.5. The number of days of delay for the month exceeds those indicated in the Special Conditions.

15.2.2. If the aforementioned conditions are met, a day-for-day extension will only be allowed for those days in excess of those indicated in the Special Conditions.

15.2.3. The Contractor shall work seven (7) days per week, if necessary, irrespective of inclement weather, to maintain access and the Construction Schedule, and to protect the Work under construction from the effects of Adverse Weather, all at no further cost to the District.

15.2.4. The Contract Time has been determined with consideration given to the average climate weather conditions prevailing in the County in which the Project is located.

15.3. Hours of Work

15.3.1. Sufficient Forces

Contractor and Subcontractors shall continuously furnish sufficient forces to ensure the prosecution of the Work in accordance with the Construction Schedule.

15.3.2. Performance During Working Hours

Work shall be performed during regular working hours as permitted by the appropriate governmental agency except that in the event of an emergency, or when required to complete the Work in accordance with job progress, Work may be performed outside of regular working hours with the advance written consent of the District and approval of any required governmental agencies.

15.4. Progress and Completion

15.4.1. Time of the Essence

Time limits stated in the Contract Documents are of the essence to the Contract. By executing the Agreement, the Contractor confirms that the Contract Time is a reasonable period for performing the Work.

15.4.2. No Commencement Without Insurance or Bonds

The Contractor shall not commence operations on the Project or elsewhere prior to the effective date of insurance and bonds. The date of commencement of the Work shall not be changed by the effective date of such insurance or bonds. If Contractor commences Work without insurance and bonds, all Work is performed at Contractor's peril and shall not be compensable until and unless Contractor secures bonds and insurance pursuant to the terms of the Contract Documents and subject to District claim for damages.

15.5. Schedule

Contractor shall provide to District, Construction Manager, and Architect a schedule in conformance with the Contract Documents and as required in the Notice to Proceed and the Contractor's Submittals and Schedules section of these General Conditions.

15.6. Expeditious Completion

The Contractor shall proceed expeditiously with adequate forces and shall achieve Completion within the Contract Time.

16. EXTENSIONS OF TIME – LIQUIDATED DAMAGES

16.1. Liquidated Damages

Contractor and District hereby agree that the exact amount of damages for failure to complete the Work within the time specified is extremely difficult or impossible to determine. If the Work is not completed within the time specified in the Contract Documents, it is understood that the District will suffer damage. It being impractical and unfeasible to determine the amount of actual damage, it is agreed the Contractor shall pay to District as fixed and liquidated damages, and not as a penalty, the amount set forth in the Agreement for each calendar day of delay in completion. Contractor and its Surety shall be liable for the amount thereof pursuant to Government Code section 53069.85.

16.2. Excusable Delay

16.2.1. Contractor shall not be charged for liquidated damages because of any delays in completion of Work which are not the fault of Contractor or its Subcontractors, including acts of God as defined in Public Contract Code section 7105, acts of enemy, epidemics, and quarantine restrictions. Contractor shall, within five (5) calendar days of beginning of any delay, notify District in writing of causes of delay including documentation and facts explaining the delay. District shall review the facts and extent of any delay and shall grant extension(s) of time for completing Work when, in its judgment, the findings of fact justify an extension. Extension(s) of time shall apply only to that portion of Work affected by delay, and shall not apply to other portions of Work not so affected. An extension of time may only be granted if Contractor has timely submitted the Construction Schedule as required herein.

16.2.2. Contractor shall notify the District pursuant to the claims provisions in these General Conditions of any anticipated delay and its cause. Following submission of a claim, the District may determine whether the delay is to be considered avoidable or unavoidable, how long it continues, and to what extent the prosecution and completion of the Work might be delayed thereby.

16.2.3. In the event the Contractor requests an extension of Contract Time for unavoidable delay, such request shall be submitted in accordance with the provisions in the Contract Documents governing changes in Work. When requesting time, requests must be submitted with full justification and documentation. If the Contractor fails to submit justification, it waives its right to a time extension at a later date. Such justification must be based on the official Construction Schedule as updated at the time of occurrence of the delay or execution of Work related to any changes to the Scope of Work. Any claim for delay must include the following information as support, without limitation:

16.2.3.1. The duration of the activity relating to the changes in the Work and the resources (manpower, equipment, material, etc.) required to perform the activities within the stated duration.

16.2.3.2. Specific logical ties to the Contract Schedule for the proposed changes and/or delay showing the activity/activities in the Construction Schedule that are affected by the change and/or delay. (A portion of any delay of seven (7) days or more must be provided.)

16.2.3.3. A recovery schedule must be submitted within twenty (20) calendar days of written notification to the District of causes of delay.

16.3. No Additional Compensation for Delays Within Contractor's Control

16.3.1. Contractor is aware that governmental agencies, including, without limitation, the Division of the State Architect, the Department of General Services, gas companies, electrical utility companies, water districts, and other agencies may have to approve Contractor-prepared drawings or approve a proposed installation. Accordingly, Contractor shall include in its bid, time for possible review of its drawings and for reasonable delays and damages that may be caused by such agencies. Thus, Contractor is not entitled to make a claim for damages or delays arising from the review of Contractor's drawings.

16.3.2. Contractor shall only be entitled to compensation for delay when all of the following conditions are met:

16.3.2.1. The District is responsible for the delay;

16.3.2.2. The delay is unreasonable under the circumstances involved;

16.3.2.3. The delay was not within the contemplation of the District and Contractor; and

16.3.2.4. Contractor complies with the claims procedure of the Contract Documents.

16.4. Float or Slack in the Schedule

Float or slack is the amount of time between the early start date and the late start date, or the early finish date and the late finish date, of any of the activities in the schedule. Float or slack is not for the exclusive use of or benefit of either the District or the Contractor, but its use shall be determined solely by the District.

17. CHANGES IN THE WORK

17.1. No Changes Without Authorization

17.1.1. There shall be no change whatsoever in the Drawings, Specifications, or in the Work without an executed Change Order or a written Construction Change Directive authorized by the District as herein provided. District shall not be liable for the cost of any extra work or any substitutions, changes, additions, omissions, or deviations from the Drawings and Specifications unless the District's governing board has authorized the same and the cost thereof has been approved in writing by Change Order or Construction Change Directive. No extension of time for performance of the Work shall be allowed hereunder unless claim for such extension is made at the time changes in the Work are ordered, and such time duly adjusted in writing in the Change Order or Construction Change Directive. Contractor shall be responsible for any costs incurred by the District for professional services and DSA

fees and/or delay to the Project Schedule, if any, for DSA to review any request for changes to the DSA approved plans and specifications for the convenience of the Contractor and/or to accommodate the Contractor's means and methods. The provisions of the Contract Documents shall apply to all such changes, additions, and omissions with the same effect as if originally embodied in the Drawings and Specifications.

17.1.2. Contractor shall perform immediately all work that has been authorized by a fully executed Change Order or Construction Change Directive. Contractor shall be fully responsible for any and all delays and/or expenses caused by Contractor's failure to expeditiously perform this Work.

17.1.3. Should any Change Order result in an increase in the Contract Price, the cost of that Change Order shall be agreed to, in writing, in advance by Contractor and District and be subject to the monetary limitations set forth in Public Contract Code section 20118.4. In the event that Contractor proceeds with any change in Work without a Change Order executed by the District or Construction Change Directive, Contractor waives any claim of additional compensation or time for that additional work.

17.1.4. Contractor understands, acknowledges, and agrees that the reason for District authorization is so that District may have an opportunity to analyze the Work and decide whether the District shall proceed with the Change Order or alter the Project so that a change in Work becomes unnecessary.

17.2. Architect Authority

The Architect will have authority to order minor changes in the Work not involving any adjustment in the Contract Price, or an extension of the Contract Time, or a change that is inconsistent with the intent of the Contract Documents. These changes shall be effected by written Change Order, Construction Change Directive, or by Architect's response(s) to RFI(s)) by Architect's Supplemental Instructions ("ASI").

.

17.3. Change Orders

17.3.1. A Change Order is a written instrument prepared and issued by the District and/or the Architect and signed by the District (as authorized by the District's Board of Trustees), the Contractor, the Architect, and approved by the Project Inspector (if necessary) and DSA (if necessary), stating their agreement regarding all of the following:

17.3.1.1. A description of a change in the Work;

17.3.1.2. The amount of the adjustment in the Contract Price, if any; and

17.3.1.3. The extent of the adjustment in the Contract Time, if any.

17.4. Construction Change Directives

17.4.1. A Construction Change Directive is a written order prepared and issued by the District, the Construction Manager, and/or the Architect and signed by the District and the Architect, directing a change in the Work. The District may as provided by law, by Construction Change Directive and without invalidating the Contract, order changes in the Work consisting of additions, deletions, or other revisions. The adjustment to the Contract Price or Time, if any, is subject to the provisions of this section regarding Changes in the Work. If all or a portion of the Project is being funded by funds requiring approval by the State Allocation Board (SAB), these revisions may be subject to compensation once approval of same is received and funded by the SAB, and funds are released by the Office of Public School Construction (OPSC). Any dispute as to the adjustment in the Contract Price, if any, of the Construction Change Directive or timing of payment shall be resolved pursuant to the Payment and Claims and Disputes provisions herein.

17.4.2. The District may issue a Construction Change Directive in the absence of agreement on the terms of a Change Order.

17.5. Force Account Directives

17.5.1. When work, for which a definite price has not been agreed upon in advance, is to be paid for on a force account basis, all direct costs necessarily incurred and paid by the Contractor for labor, material, and equipment used in the performance of that Work, shall be subject to the approval of the District and compensation will be determined as set forth herein.

17.5.2. The District will issue a Force Account Directive to proceed with the Work on a force account basis, and a not-to-exceed budget will be established by the District.

17.5.3. All requirements regarding direct cost for labor, labor burden, material, equipment, and markups on direct costs for overhead and profit described in this section shall apply to Force Account Directives. However, the District will only pay for actual costs verified in the field by the District or its authorized representative(s) on a daily basis.

17.5.4. The Contractor shall be responsible for all cost related to the administration of Force Account Directive. The markup for overheard and profit for Contractor modifications shall be full compensation to the Contractor to administer Force Account Directive.

17.5.5. The Contractor shall notify the District or its authorized representative(s) at least twenty-four (24) hours prior to proceeding with any of the force account work. Furthermore, the Contractor shall notify the District when it has consumed eighty percent (80%) of the budget, and shall not exceed the budget unless specifically authorized in writing by the District. The Contractor will not be compensated for force account work in the event that the Contractor fails to timely notify the District regarding the commencement of force account work, or exceeding the force account budget.

17.5.6. The Contractor shall diligently proceed with the work, and on a daily basis, submit a daily force account report on a form supplied by the District no later than 5:00 p.m. each day. The report shall contain a detailed itemization of the daily labor, material, and equipment used on the force account work only. The names of the individuals performing the force account work shall be included on the daily force account reports. The type and model of equipment shall be identified and listed. The District will review the information contained in the reports, and sign the reports no later than the next work day, and return a copy of the report to the Contractor for their records. The District will not sign, nor will the Contractor receive compensation for work the District cannot verify. The Contractor will provide a weekly force account summary indicating the status of each Force Account Directive in terms of percent complete of the not-to-exceed budget and the estimated percent complete of the work

17.5.7. In the event the Contractor and the District reach a written agreement on a set cost for the work while the work is proceeding based on a Force Account Directive, the Contractor's signed daily force account reports shall be discontinued and all previously signed reports shall be invalid.

17.6. Price Request

17.6.1. Definition of Price Request

A Price Request ("PR") is a written request prepared by the Architect requesting the Contractor to submit to the District and the Architect an estimate of the effect of a proposed change in the Work on the Contract Price and the Contract Time.

17.6.2. Scope of Price Request

A Price Request shall contain adequate information, including any necessary Drawings and Specifications, to enable Contractor to provide the cost breakdowns required herein. The Contractor shall not be entitled to any additional compensation for preparing a response to a Price Request, whether ultimately accepted or not.

17.7. Proposed Change Order

17.7.1. Definition of Proposed Change Order

A Proposed Change Order ("PCO") is a written request prepared by the Contractor requesting that the District and the Architect issue a Change Order based upon a proposed change to the Work.

17.7.2. Changes in Contract Price

A PCO shall include breakdowns pursuant to the revisions herein to validate any change in Contract Price. In no case shall Contractor or any of its Subcontractors be permitted to reserve rights for additional compensation for Change Order Work.

17.7.3. Changes in Time

A PCO shall also include any changes in time required to complete the Project. Any additional time requested shall not be the number of days to make the proposed change, but must be based upon the impact to the Construction Schedule as defined in the Contract Documents. If Contractor fails to request a time extension in a PCO, then the Contractor is thereafter precluded from requesting time and/or claiming a delay. In no case shall Contractor or any of its Subcontractors be permitted to reserve rights for additional time for Change Order Work.

17.7.4. Unknown and/or Unforeseen Conditions

If Contractor submits a PCO requesting an increase in Contract Price and/or Contract Time that is based at least partially on Contractor's assertion that Contractor has encountered unknown and/or unforeseen condition(s) on the Project, then Contractor shall base the PCO on provable information that, beyond a reasonable doubt and to the District's satisfaction, demonstrates that the unknown and/or unforeseen condition(s) were actually unknown and/or unforeseen and that the condition(s) were reasonably unknown and/or unforeseen. If not, the District shall deny the PCO and the Contractor shall complete the Project without any increase in Contract Price and/or Contract Time based on that PCO.

[REMAINDER OF PAGE INTENTIONALLY BLANK]

17.8. Format for Proposed Change Order

17.8.1. The following format shall be used as applicable by the District and the Contractor (e.g. Change Orders, PCO's) to communicate proposed additions and deductions to the Contract, supported by attached documentation. Any spaces left blank will be deemed no change to cost or time.

	WORK PERFORMED OTHER THAN BY CONTRACTOR	**ADD**	**DEDUCT**
(a)	**Material** (attach itemized quantity and unit cost plus sales tax)		
(b)	**Add Labor** (attach itemized hours and rates, fully encumbered)		
(c)	**Add Equipment** (attach suppliers' invoice)		
(d)	**Subtotal**		
(e)	**Add overhead and profit for any and all tiers of Subcontractor,** the total not to exceed ten percent (10%) of Item (d)		
(f)	**Subtotal**		
(g)	**Add overhead and profit for Contractor**, not to exceed five percent (5%) of Item (f)		
(h)	**Subtotal**		
(i)	**Add Bond and Insurance,** not to exceed one and a half percent (1.5%) of Item (h)		
(j)	**TOTAL**		
(k)	**Time** (zero unless indicated)	**____ Calendar Days**	

	WORK PERFORMED BY CONTRACTOR	**ADD**	**DEDUCT**
(a)	**Material** (attach itemized quantity and unit cost plus sales tax)		
(b)	**Add Labor** (attach itemized hours and rates, fully encumbered)		
(c)	**Add Equipment** (attach suppliers' invoice)		
(d)	**Subtotal**		
(e)	**Add overhead and profit for Contractor,** not to exceed fifteen percent (15%) of Item (d)		
(f)	**Subtotal**		
(g)	**Add Bond and Insurance,** not to exceed one and a half percent (1.5%) of Item (f)		
(h)	**TOTAL**		
(i)	**Time** (zero unless indicated)	**____ Calendar Days**	

	WORK PERFORMED OTHER THAN BY CONTRACTOR	**ADD**	**DEDUCT**

(a)	**Material** (attach itemized quantity and unit cost plus sales tax)		
(b)	**Add Labor** (attach itemized hours and rates, fully encumbered)		
(c)	**Add Equipment** (attach suppliers' invoice)		
(d)	**Subtotal**		
(e)	**Add overhead and profit for any and all tiers of Subcontractor,** the total not to exceed ten percent (10%) of Item (d)		
(f)	**Subtotal**		
(g)	**Add overhead and profit for Contractor**, not to exceed five percent (5%) of Item (f)		
(h)	**Subtotal**		
(i)	**Add Bond and Insurance,** not to exceed one and a half percent (1.5%) of Item (h)		
(j)	**TOTAL**		
(k)	**Time** (zero unless indicated)	**____ Calendar Days**	

	WORK PERFORMED BY CONTRACTOR	**ADD**	**DEDUCT**
(a)	**Material** (attach itemized quantity and unit cost plus sales tax)		
(b)	**Add Labor** (attach itemized hours and rates, fully encumbered)		
(c)	**Add Equipment** (attach suppliers' invoice)		
(d)	**Subtotal**		
(e)	**Add overhead and profit for Contractor,** not to exceed fifteen percent (15%) of Item (d)		
(f)	**Subtotal**		
(g)	**Add Bond and Insurance,** not to exceed one and a half percent (1.5%) of Item (f)		
(h)	**TOTAL**		
(i)	**Time** (zero unless indicated)	**____ Calendar Days**	

17.8.2. Labor. Contractor shall be compensated for the costs of labor actually and directly utilized in the performance of the Work. Such labor costs shall be limited to field labor for which there is a prevailing wage rate classification. Wage rates for labor shall not exceed the prevailing wage rates in the locality of the Site and shall be in the labor classification(s) necessary for the performance of the Work. Labor costs shall exclude costs incurred by the Contractor in preparing estimate(s) of the costs of the change in the Work, in the maintenance of records relating to the costs of the change in the Work, coordination and assembly of materials and information relating to the change in the Work or performance thereof, or the supervision and other overhead and general conditions costs associated with the change in the Work or performance thereof, including but not limited to the cost for the job superintendent.

17.8.3. Materials. Contractor shall be compensated for the costs of materials necessarily and actually used or consumed in connection with the performance of the change in the Work. Costs of materials may include reasonable costs of transportation from a source closest to the Site of the Work and delivery to the Site. If discounts by material suppliers are available for materials necessarily used in the performance of the change in the Work, they shall be credited to the District. If materials necessarily used in the performance of the change in the Work are obtained from a supplier or source owned in whole or in part by the Contractor, compensation therefor shall not exceed the current wholesale price for such materials. If, in the reasonable opinion of the District, the costs asserted by the Contractor for materials in connection with any change in the Work are excessive, or if the Contractor fails to provide satisfactory evidence of the actual costs of such materials from its supplier or vendor of the same, the costs of such materials and the District's obligation to pay for the same shall be limited to the then lowest wholesale price at which similar materials are available in the quantities required to perform the change in the Work. The District may elect to furnish materials for the change in the Work, in which event the Contractor shall not be compensated for the costs of furnishing such materials or any mark-up thereon.

17.8.4. Equipment. As a precondition for the District's duty to pay for Equipment rental or loading and transportation, Contractor shall provide satisfactory evidence of the actual costs of Equipment from the supplier, vendor or rental agency of same. Contractor shall be compensated for the actual cost of the necessary and direct use of Equipment in the performance of the change in the Work. Use of such Equipment in the performance of the change in the Work shall be compensated in increments of fifteen (15) minutes. Rental time for Equipment moved by its own power shall include time required to move such Equipment to the site of the Work from the nearest available rental source of the same. If Equipment is not moved to the Site by its own power, Contractor will be compensated for the loading and transportation costs in lieu of rental time. The foregoing notwithstanding, neither moving time or loading and transportation time shall be allowed if the Equipment is used for performance of any portion of the Work other than the change in the Work. Unless prior approval in writing is obtained by the Contractor from the Architect, the Project Inspector and the District, no costs or compensation shall be allowed for time while Construction Equipment is inoperative, idle or on standby, for any reason. Contractor shall not be entitled to an allowance or any other compensation for Equipment or tools used in the performance of change in the Work where such

Equipment or tools have a replacement value of **$500.00** or less. Equipment costs claimed by the Contractor in connection with the performance of any Work shall not exceed rental rates established by distributors or construction equipment rental agencies in the locality of the Site; any costs asserted which exceed such rental rates shall not be allowed or paid. Unless otherwise specifically approved in writing by the Architect, the Project Inspector and the District, the allowable rate for the use of Equipment in connection with the Work shall constitute full compensation to the Contractor for the cost of rental, fuel, power, oil, lubrication, supplies, necessary attachments, repairs or maintenance of any kind, depreciation, storage, insurance, labor (exclusive of labor costs of the Equipment operator), and any and all other costs incurred by the Contractor incidental to the use of such Equipment.

17.9. Change Order Certification

17.9.1. All Change Orders and PCOs must include the following certification by the Contractor:

17.9.1.1. The undersigned Contractor approves the foregoing as to the changes, if any, and the Contract Price specified for each item and as to the extension of time allowed, if any, for completion of the entire Work as stated herein, and agrees to furnish all labor, materials, and service, and perform all work necessary to complete any additional work specified for the consideration stated herein. Submission of sums which have no basis in fact or which Contractor knows are false are at the sole risk of Contractor and may be a violation of the False Claims Act set forth under Government Code section 12650 et seq. It is understood that the changes herein to the Contract shall only be effective when approved by the governing board of the District.

17.9.1.2. It is expressly understood that the value of the extra Work or changes expressly includes any and all of the Contractor's costs and expenses, direct and indirect, resulting from additional time required on the Project or resulting from delay to the Project. Any costs, expenses, damages, or time extensions not included are deemed waived.

17.10. Determination of Change Order Cost

17.10.1. The amount of the increase or decrease in the Contract Price from a Change Order, if any, shall be determined in one or more of the following ways as applicable to a specific situation and at the District's discretion:

17.10.1.1. District acceptance of a PCO;

17.10.1.2. By unit prices contained in Contractor's original bid;

17.10.1.3. By agreement between District and Contractor.

17.11. Deductive Change Orders

All deductive Change Order(s) must be prepared pursuant to the provisions herein. Where a portion of the Work is deleted from the Contract, the reasonable value of the deducted work less the value of work performed shall be considered the appropriate deduction. The value submitted on the Schedule of Values shall be used to calculate the credit amount unless the bid documentation is being held in escrow as part of the Contract Documents. If Contractor offers a proposed amount for a deductive Change Order(s), Contractor shall include a minimum of five percent (5%) total profit and overhead to be deducted with the amount of the work of the Change Order(s). If Subcontractor work is involved, Subcontractors shall also include a minimum of five percent (5%) profit and overhead to be deducted with the amount of its deducted work. Any deviation from this provision shall not be allowed.

17.12. Addition or Deletion of Alternate Bid Item(s)

If the Bid Form and Proposal includes proposal(s) for Alternate Bid Item(s), during Contractor's performance of the Work, the District may elect to add or delete any such Alternate Bid Item(s) if not included in the Contract at the time of award. If the District elects to add or delete Alternate Bid Item(s) after Contract award, the cost or credit for such Alternate Bid Item(s) shall be as set forth in the Bid Form and Proposal unless the parties agree to a different price and the Contract Time shall be adjusted by the number of days allocated in the Contract Documents. If days are not allocated in the Contract Documents, the Contract Time shall be equitably adjusted.

17.13. Discounts, Rebates, and Refunds

For purposes of determining the cost, if any, of any change, addition, or omission to the Work hereunder, all trade discounts, rebates, refunds, and all returns from the sale of surplus materials and equipment shall accrue and be credited to the Contractor, and the Contractor shall make provisions so that such discounts, rebates, refunds, and returns may be secured, and the amount thereof shall be allowed as a reduction of the Contractor's cost in determining the actual cost of construction for purposes of any change, addition, or omission in the Work as provided herein.

17.14. Accounting Records

With respect to portions of the Work performed by Change Orders and Construction Change Directives, the Contractor shall keep and maintain cost-accounting records satisfactory to the District, which shall be available to the District on the same terms as any other books and records the Contractor is required to maintain under the Contract Documents. Such records shall include without limitation hourly records for Labor and Equipment and itemized records of materials and Equipment used that day in connection with the performance of any Work. All records maintained hereunder shall be subject to inspection, review and/or reproduction by the District, the Architect or the Project Inspector upon request. In the event that the Contractor fails or refuses, for any reason, to maintain or make available for inspection, review and/or reproduction such records, the District's reasonable good faith determination of the extent of adjustment to the Contract Price shall be final, conclusive, dispositive and binding upon Contractor.

17.15. Notice Required

If the Contractor desires to make a claim for an increase in the Contract Price, or any extension in the Contract Time for completion, it shall notify the District pursuant to the provisions herein, including the Article on Claims and Disputes. No claim shall be considered unless made in accordance with this subparagraph. Contractor shall proceed to execute the Work even though the adjustment may not have been agreed upon. Any change in the Contract Price or extension of the Contract Time resulting from such claim shall be authorized by a Change Order.

17.16. Applicability to Subcontractors

Any requirements under this Article shall be equally applicable to Change Orders or Construction Change Directives issued to Subcontractors by the Contractor to the extent as required by the Contract Documents.

17.17. Alteration to Change Order Language

Contractor shall not alter Change Orders or reserve time in Change Orders. Contractor shall execute finalized Change Orders and proceed under the provisions herein with proper notice.

17.18. Failure of Contractor to Execute Change Order

Contractor shall be in default of the Contract if Contractor fails to execute a Change Order when the Contractor agrees with the addition and/or deletion of the Work in that Change Order.

18. REQUEST FOR INFORMATION

18.1. Any Request for Information shall reference all applicable Contract Document(s), including Specification section(s), detail(s), page number(s), drawing number(s), and sheet number(s), etc. The Contractor shall make suggestions and interpretations of the issue raised by each Request for Information. A Request for Information cannot modify the Contract Price, Contract Time, or the Contract Documents. Upon request by the District, Contractor shall provide an electronic copy of the Request for Information in addition to the hard copy.

18.2. The Contractor shall be responsible for any costs incurred for professional services that District may deduct from any amounts owing to the Contractor, if a Request for Information requests an interpretation or decision of a matter where the information sought is equally available to the party making the request. District, at its sole discretion, shall deduct from and/or invoice Contractor for all the professional services arising herein.

19. PAYMENTS

19.1. Contract Price

The Contract Price is stated in the Agreement and, including authorized adjustments, is the total amount payable by the District to the Contractor for performance of the Work under the Contract Documents.

19.2. Applications for Progress Payments

19.2.1. Procedure for Applications for Progress Payments

19.2.1.1. Application for Progress Payment

19.2.1.1.1. Not before the fifth (5th) day of each calendar month during the progress of the Work, Contractor shall submit to the District and the Architect an itemized Application for Payment for operations completed in accordance with the Schedule of Values. Such application shall be notarized, if required, and supported by the following or each portion thereof unless waived by the District in writing:

19.2.1.1.1.1. The amount paid to the date of the Application to the Contractor, to all its Subcontractors, and all others furnishing labor, material, or equipment for its Contract;

19.2.1.1.1.2. The amount being requested under the Application for Payment by the Contractor on its own behalf and separately stating the amount requested on behalf of each of the Subcontractors and all others furnishing labor, material, and equipment under the Contract;

19.2.1.1.1.3. The balance that will be due to each of such entities after said payment is made;

19.2.1.1.1.4. A certification that the As-Built Drawings and annotated Specifications are current;

19.2.1.1.1.5. Itemized breakdown of work done for the purpose of requesting partial payment;

19.2.1.1.1.6. An updated and acceptable construction schedule in conformance with the provisions herein;

19.2.1.1.1.7. The additions to and subtractions from the Contract Price and Contract Time;

19.2.1.1.1.8. A total of the retentions held;

19.2.1.1.1.9. Material invoices, evidence of equipment purchases, rentals, and other support and details of cost as the District may require from time to time;

19.2.1.1.1.10. The percentage of completion of the Contractor's Work by line item;

19.2.1.1.1.11. Schedule of Values updated from the preceding Application for Payment;

19.2.1.1.1.12. A duly completed and executed conditional waiver and release upon progress payment compliant with Civil Code section 8132 from the Contractor and each subcontractor of any tier and supplier to be paid from the current progress payment;

19.2.1.1.1.13. A duly completed and executed unconditional waiver and release upon progress payment compliant with Civil Code section 8134 from the Contractor and each subcontractor of any tier and supplier that was paid from the previous progress payment(s); and

19.2.1.1.1.14. A certification by the Contractor of the following:

The Contractor warrants title to all Work performed as of the date of this payment application has been completed in accordance with the Contract Documents for the Project. The Contractor further warrants that all amounts have been paid for work which previous Certificates for Payment were issued and payments received and all Work performed as of the date of this payment application is free and clear of liens, claims, security interests, or encumbrances in favor of the Contractor, Subcontractors, material and equipment suppliers, workers, or other persons or entities making a claim by reason of having provided labor, materials, and equipment relating to the Work, except those of which the District has been informed.

19.2.1.1.1.15. The Contractor shall be subject to the False Claims Act set forth in Government Code section 12650 et seq. for information provided with any Application for Progress Payment.

19.2.1.1.1.16. All remaining certified payroll records ("CPR(s)") for each journeyman, apprentice, worker, or other employee employed by the Contractor and/or each Subcontractor in connection with the Work for the period of the Application for Payment. As indicated herein, the District shall not make any payment to Contractor until:

19.2.1.1.1.16.1 Contractor and/or its Subcontractor(s) provide electronic CPRs weekly for all weeks any journeyman, apprentice, worker or other employee was employed in connection with the Work directly to the DIR, or within ten (10) days of any request by the District or the DIR, and

19.2.1.1.1.16.2 Any delay in Contractor and/or its Subcontractor(s) providing CPRs in a timely manner may directly delay the Contractor's payment.

19.2.2. Prerequisites for Progress Payments

19.2.2.1. First Payment Request: The following items, if applicable, must be completed before the District will accept and/or process the Contractor's first payment request:

19.2.2.1.1. Installation of the Project sign;

19.2.2.1.2. Installation of field office;

19.2.2.1.3. Installation of temporary facilities and fencing;

19.2.2.1.4. Schedule of Values;

19.2.2.1.5. Contractor's Construction Schedule;

19.2.2.1.6. Schedule of unit prices, if applicable;

19.2.2.1.7. Submittal Schedule;

19.2.2.1.8. Receipt by Architect of all submittals due as of the date of the payment application;

19.2.2.1.9. Copies of necessary permits;

19.2.2.1.10. Copies of authorizations and licenses from governing authorities;

19.2.2.1.11. Initial progress report;

19.2.2.1.12. Surveyor qualifications;

19.2.2.1.13. Written acceptance of District's survey of rough grading, if applicable;

19.2.2.1.14. List of all Subcontractors, with names, license numbers, telephone numbers, and Scope of Work;

19.2.2.1.15. All bonds and insurance endorsements; and

19.2.2.1.16. Resumes of Contractor's project manager, and if applicable, job site secretary, record documents recorder, and job site superintendent.

19.2.2.2. Second Payment Request The District will not process the second payment request until and unless all submittals and Shop Drawings have been accepted for review by the Architect.

19.2.2.3. No Waiver of Criteria Any payments made to Contractor where criteria set forth herein have not been met shall not constitute a waiver of said

criteria by District. Instead, such payment shall be construed as a good faith effort by District to resolve differences so Contractor may pay its Subcontractors and suppliers. Contractor agrees that failure to submit such items may constitute a breach of contract by Contractor and may subject Contractor to termination.

19.3. Progress Payments

19.3.1. District's Approval of Application for Payment

19.3.1.1. Upon receipt of a Application for Payment, The District shall act in accordance with both of the following:

19.3.1.1.1. Each Application for Payment shall be reviewed by the District as soon as practicable after receipt for the purpose of determining that the Application for Payment is a proper Application for Payment.

19.3.1.1.2. Any Application for Payment determined not to be a proper Application for Payment suitable for payment shall be returned to the Contractor as soon as practicable, but not later than seven (7) days, after receipt. An Application for Payment returned pursuant to this paragraph shall be accompanied by a document setting forth in writing the reasons why the Application for Payment is not proper. The number of days available to the District to make a payment without incurring interest pursuant to this section shall be reduced by the number of days by which the District exceeds this seven-day return requirement.

19.3.1.1.3. An Application for Payment shall be considered properly executed if funds are available for payment of the Application for Payment, and payment is not delayed due to an audit inquiry by the financial officer of the District.

19.3.1.2. The District's review of the Contractor's Application for Payment will be based on the District's and the Architect's observations at the Site and the data comprising the Application for Payment that the Work has progressed to the point indicated and that, to the best of the District's and the Architect's knowledge, information, and belief, the quality of the Work is in accordance with the Contract Documents. The foregoing representations are subject to:

19.3.1.2.1. Observation of the Work for general conformance with the Contract Documents,

19.3.1.2.2. Results of subsequent tests and inspections,

19.3.1.2.3. Minor deviations from the Contract Documents correctable prior to completion, and

19.3.1.2.4. Specific qualifications expressed by the Architect.

19.3.1.3. District's approval of the certified Application for Payment shall be based on Contractor complying with all requirements for a fully complete and valid certified Application for Payment.

19.3.2. Payments to Contractor

19.3.2.1. Within thirty (30) days after approval of the Application for Payment, Contractor shall be paid a sum equal to ninety-five percent (95%) of the value of the Work performed (as verified by Architect and Inspector and certified by Contractor) up to the last day of the previous month, less the aggregate of previous payments and amount to be withheld. The value of the Work completed shall be Contractor's best estimate. No inaccuracy or error in said estimate shall operate to release the Contractor, or any Surety upon any bond, from damages arising from such Work, or from the District's right to enforce each and every provision of this Contract, and the District shall have the right subsequently to correct any error made in any estimate for payment.

19.3.2.2. The Contractor shall not be entitled to have any payment requests processed, or be entitled to have any payment made for Work performed, so long as any lawful or proper direction given by the District concerning the Work, or any portion thereof, remains incomplete.

19.3.2.3. If the District fails to make any progress payment within thirty (30) days after receipt of an undisputed and properly submitted Application for Payment from the Contractor, the District shall pay interest to the Contractor equivalent to the legal rate set forth in subdivision (a) of Section 685.010 of the Code of Civil Procedure.

19.3.3. No Waiver

No payment by District hereunder shall be interpreted so as to imply that District has inspected, approved, or accepted any part of the Work. Notwithstanding any payment, the District may enforce each and every provision of this Contract. The District may correct or require correction of any error subsequent to any payment.

19.4. Decisions to Withhold Payment

19.4.1. Reasons to Withhold Payment

The District may withhold payment in whole, or in part, to the extent reasonably necessary to protect the District if, in the District's opinion, the representations to the District required herein cannot be made. The District may withhold payment, in whole, or in part, to such extent as may be necessary to protect the District from loss because of, but not limited to:

19.4.1.1. Defective Work not remedied within **FORTY-EIGHT (48)** hours of written notice to Contractor.

19.4.1.2. Stop Payment Notices or other liens served upon the District as a result of the Contract. Contractor agrees that the District may withhold up to 125% of the amount claimed in the Stop Payment Notice to answer the claim and to provide for the District's reasonable cost of any litigation pursuant to the stop payment notice.

19.4.1.3. Liquidated damages assessed against the Contractor.

19.4.1.4. The cost of completion of the Contract if there exists reasonable doubt that the Work can be completed for the unpaid balance of the Contract Price or by the completion date.

19.4.1.5. Damage to the District or other contractor(s).

19.4.1.6. Unsatisfactory prosecution of the Work by the Contractor.

19.4.1.7. Failure to store and properly secure materials.

19.4.1.8. Failure of the Contractor to submit, on a timely basis, proper, sufficient, and acceptable documentation required by the Contract Documents, including, without limitation, a Construction Schedule, Schedule of Submittals, Schedule of Values, Monthly Progress Schedules, Shop Drawings, Product Data and samples, Proposed product lists, executed Change Orders, and/or verified reports.

19.4.1.9. Failure of the Contractor to maintain As-Built Drawings.

19.4.1.10. Erroneous estimates by the Contractor of the value of the Work performed, or other false statements in an Application for Payment.

19.4.1.11. Unauthorized deviations from the Contract Documents.

19.4.1.12. Failure of the Contractor to prosecute the Work in a timely manner in compliance with the Construction Schedule, established progress schedules, and/or completion dates.

19.4.1.13. Failure to provide acceptable electronic certified payroll records, as required by the Labor Code, by these Contract Documents, or by written request; for each journeyman, apprentice, worker, or other employee employed by the Contractor and/or by each Subcontractor in connection with the Work for the period of the Application for Payment or if payroll records are delinquent or inadequate.

19.4.1.14. Failure to properly pay prevailing wages as required in Labor Code section 1720 et seq., failure to comply with any other Labor Code requirements, and/or failure to comply with labor compliance monitoring and enforcement by the DIR.

19.4.1.15. Failure to properly pay prevailing wages as required in Labor Code section 1720 et seq., failure to comply with any other Labor Code requirements,

and/or failure to comply with State labor compliance monitoring and enforcement, if applicable.

19.4.1.16. Failure to comply with any applicable federal statutes and regulations regarding minimum wages, withholding, payrolls and basic records, apprentice and trainee employment requirements, equal employment opportunity requirements, Copeland Act requirements, Davis-Bacon Act and related requirements, Contract Work Hours and Safety Standards Act requirements, if applicable.

19.4.1.17. Failure to properly maintain or clean up the Site.

19.4.1.18. Failure to timely indemnify, defend, or hold harmless the District.

19.4.1.19. Any payments due to the District, including but not limited to payments for failed tests, utilities changes, or permits.

19.4.1.20. Failure to pay Subcontractor(s) or supplier(s) as required by law and by the Contract Documents.

19.4.1.21. Failure to pay any royalty, license or similar fees.

19.4.1.22. Contractor is otherwise in breach, default, or in substantial violation of any provision of this Contract.

19.4.1.23. Failure to perform any implementation and/or monitoring required by any SWPPP for the Project and/or the imposition of any penalties or fines therefore whether imposed on the District or Contractor.

19.4.2. Reallocation of Withheld Amounts

19.4.2.1. District may, in its discretion, apply any withheld amount to pay outstanding claims or obligations as defined herein. In so doing, District shall make such payments on behalf of Contractor. If any payment is so made by District, then that amount shall be considered a payment made under Contract by District to Contractor and District shall not be liable to Contractor for any payment made in good faith. These payments may be made without prior judicial determination of claim or obligation. District will render Contractor an accounting of funds disbursed on behalf of Contractor.

19.4.2.2. If Contractor defaults or neglects to carry out the Work in accordance with the Contract Documents or fails to perform any provision thereof, District may, after **FORTY-EIGHT (48)** hours written notice to the Contractor and, without prejudice to any other remedy, make good such deficiencies. The District shall adjust the total Contract Price by reducing the amount thereof by the cost of making good such deficiencies. If District deems it inexpedient to correct Work that is damaged, defective, or not done in accordance with Contract provisions, an equitable reduction in the Contract Price (of at least one hundred fifty percent (150%) of the estimated reasonable value of the nonconforming Work) shall be made therefor.

19.4.3. Payment After Cure

When Contractor removes the grounds for declining approval, payment shall be made for amounts withheld because of them. No interest shall be paid on any retainage or amounts withheld due to the failure of the Contractor to perform in accordance with the terms and conditions of the Contract Documents.

19.5. Subcontractor Payments

19.5.1. Payments to Subcontractors

No later than seven (7) days after receipt, or pursuant to Business and Professions Code section 7108.5 and Public Contract Code section 7107, the Contractor shall pay to each Subcontractor, out of the amount paid to the Contractor on account of such Subcontractor's portion of the Work, the amount to which said Subcontractor is entitled. The Contractor shall, by appropriate agreement with each Subcontractor, require each Subcontractor to make payments to its Sub-subcontractors in a similar manner.

19.5.2. No Obligation of District for Subcontractor Payment

The District shall have no obligation to pay, or to see to the payment of, money to a Subcontractor except as may otherwise be required by law.

19.5.3. Joint Checks

District shall have the right in its sole discretion, if necessary for the protection of the District, to issue joint checks made payable to the Contractor and Subcontractors and/or material or equipment suppliers. The joint check payees shall be responsible for the allocation and disbursement of funds included as part of any such joint payment. In no event shall any joint check payment be construed to create any contract between the District and a Subcontractor of any tier, or a material or equipment supplier, any obligation from the District to such Subcontractor or a material or equipment supplier, or rights in such Subcontractor or a material or equipment supplier against the District.

20. COMPLETION OF THE WORK

20.1. Completion

20.1.1. District will accept completion of Contract and have the Notice of Completion recorded when the entire Work shall have been completed to the satisfaction of District.

20.1.2. The Work may only be accepted as complete by action of the governing board of the District.

20.1.3. District, at its sole option, may accept completion of Contract and have the Notice of Completion recorded when the entire Work shall have been completed

to the satisfaction of District, except for minor corrective items, as distinguished from incomplete items. If Contractor fails to complete all minor corrective items within fifteen (15) days after the date of the District's acceptance of completion, District shall withhold from the final payment one hundred fifty percent (150%) of an estimate of the amount sufficient to complete the corrective items, as determined by District, until the item(s) are completed.

20.1.4. At the end of the 15-day period, if there are any items remaining to be corrected, District may elect to proceed as provided herein related to adjustments to Contract Price, and/or District's right to perform the Work of the Contractor.

20.2. Close-Out/Certification Procedures

20.2.1. Punch List

The Contractor shall notify the Architect when Contractor considers the Work complete. Upon notification, Architect will prepare a list of minor items to be completed or corrected ("Punch List"). The Contractor and/or its Subcontractors shall proceed promptly to complete and correct items on the Punch List. Failure to include an item on Punch List does not alter the responsibility of the Contractor to complete all Work in accordance with the Contract Documents.

20.2.2. Close-Out/Certification Requirements

20.2.2.1. Utility Connections

Buildings shall be connected to water, gas, sewer, and electric services, complete and ready for use. Service connections shall be made and existing services reconnected.

20.2.2.2. Record Drawings

20.2.2.2.1. Contractor shall provide exact Record Drawings of the Work upon completion of the Project as indicated in the Specifications.

20.2.2.2.2. Contractor is liable and responsible for any and all inaccuracies in the Record Drawings, even if inaccuracies become evident at a future date.

20.2.2.2.3. Upon completion of the Work and as a condition precedent to approval of final payment, Contractor shall obtain the Inspector's approval of the corrected prints and employ a competent draftsman to transfer the Record Drawings information to the most current version of Autocad that is, at that time, currently utilized for plan check submission by either the District, the Architect, OPSC, and/or DSA, and print a complete set of transparent sepias. When completed, Contractor shall deliver corrected sepias and diskette/CD/other data storage device acceptable to District with Autocad file to the District.

20.2.2.3. Maintenance Manuals: Contractor shall prepare all operation and maintenance manuals and date as indicated in the Specifications.

20.2.2.4. Source Programming: Contractor shall provide all source programming for all items in the Project.

20.2.2.5. Verified Reports: Contractor shall completely and accurately fill out and file forms DSA 6-C or DSA 152 (or current form), as appropriate. Refer to section 4-336 and section 4-343 of Part 1, Title 24 of the California Code of Regulations.

20.3. Final Inspection

20.3.1. Contractor shall comply with Punch List procedures as provided herein, and maintain the presence of a Project Superintendent and Project Manager until the Punch List is complete to ensure proper and timely completion of the Punch List. Under no circumstances shall Contractor demobilize its forces prior to completion of the Punch List. Upon receipt of Contractor's written notice that all of the Punch List items have been fully completed and the Work is ready for final inspection and acceptance, Architect and Project Inspector will inspect the Work and shall submit to Contractor and District a final inspection report noting the Work, if any, required in order to complete in accordance with the Contract Documents. Absent unusual circumstances, this report shall consist of the Punch List items not yet satisfactorily completed.

20.3.2. Upon Contractor's completion of all items on the Punch List and any other uncompleted portions of the Work, the Contractor shall notify the District and Architect, who shall again inspect such Work. If the Architect finds the Work complete and acceptable under the Contract Documents, the Architect will notify Contractor, who shall then jointly submit to the Architect and the District its final Application for Payment.

20.3.3. Final Inspection Requirements

20.3.3.1. Before calling for final inspection, Contractor shall determine that the following have been performed:

20.3.3.1.1. The Work has been completed.

20.3.3.1.2. All life safety items are completed and in working order.

20.3.3.1.3. Mechanical and electrical Work are complete and tested, fixtures are in place, connected, and ready for tryout.

20.3.3.1.4. Electrical circuits scheduled in panels and disconnect switches labeled.

20.3.3.1.5. Painting and special finishes complete.

20.3.3.1.6. Doors complete with hardware, cleaned of protective film, relieved of sticking or binding, and in working order.

20.3.3.1.7. Tops and bottoms of doors sealed.

20.3.3.1.8. Floors waxed and polished as specified.

20.3.3.1.9. Broken glass replaced and glass cleaned.

20.3.3.1.10. Grounds cleared of Contractor's equipment, raked clean of debris, and trash removed from Site.

20.3.3.1.11. Work cleaned, free of stains, scratches, and other foreign matter, of damaged and broken material replaced.

20.3.3.1.12. Finished and decorative work shall have marks, dirt, and superfluous labels removed.

20.3.3.1.13. Final cleanup, as provided herein.

20.4. Costs of Multiple Inspections

More than two (2) requests of the District to make a final inspection shall be considered an additional service of District, Architect, Construction Manager, and/or Project Inspector, and all subsequent costs will be invoiced to Contractor and if funds are available, withheld from remaining payments.

20.5. Partial Occupancy or Use Prior to Completion

20.5.1. District's Rights to Occupancy

The District may occupy or use any completed or partially completed portion of the Work at any stage, and such occupancy shall not constitute the District's Final Acceptance of any part of the Work. Neither the District's Final Acceptance, the making of Final Payment, any provision in Contract Documents, nor the use or occupancy of the Work, in whole or in part, by District shall constitute acceptance of Work not in accordance with the Contract Documents nor relieve the Contractor or the Contractor's Performance Bond Surety from liability with respect to any warranties or responsibility for faulty or defective Work or materials, equipment and workmanship incorporated therein. In the event that the District occupies or uses any completed or partially completed portion of the Work, the Contractor shall remain responsible for payments, security, maintenance, heat, utilities, damage to the Work, insurance, the period for correction of the Work, and the commencement of warranties required by the Contract Documents unless the Contractor requests in writing, and the District agrees, to otherwise divide those responsibilities. Any dispute as to responsibilities shall be resolved pursuant to the Claims and Disputes provisions herein, with the added provision that during the dispute process, the District shall have the right to occupy or use any portion of the Work that it needs or desires to use.

20.5.2. Inspection Prior to Occupancy or Use

Immediately prior to partial occupancy or use, the District, the Contractor, and the Architect shall jointly inspect the area to be occupied or portion of the Work to be used in order to determine and record the condition of the Work.

20.5.3. No Waiver

Unless otherwise agreed upon, partial or entire occupancy or use of a portion or portions of the Work shall not constitute beneficial occupancy or acceptance of the Work not complying with the requirements of the Contract Documents.

21. FINAL PAYMENT AND RETENTION

21.1. Final Payment

Upon receipt and approval of a valid and final Application for Payment, the Architect will issue a final Certificate of Payment. The District shall thereupon jointly inspect the Work and either accept the Work as complete or notify the Architect and the Contractor in writing of reasons why the Work is not complete. Upon acceptance of the Work of the Contractor as fully complete by the Governing Board of the District (that, absent unusual circumstances, will occur when the Punch List items have been satisfactorily completed), the District shall record a Notice of Completion with the County Recorder, and the Contractor shall, upon receipt of final payment from the District, pay the amount due Subcontractors.

21.2. Prerequisites for Final Payment The following conditions must be fulfilled prior to Final Payment:

21.2.1. A full release of all Stop Payment Notices served in connection with the Work shall be submitted by Contractor.

21.2.2. A duly completed and executed conditional waiver and release upon final payment compliant with Civil Code section 8136, from the Contractor and each subcontractor of any tier and supplier to be paid from the final payment.

21.2.3. A duly completed and executed unconditional waiver and release upon progress payment compliant with Civil Code section 8134, from the Contractor and each subcontractor of any tier and supplier that was paid from the previous progress payments.

21.2.4. A duly completed and executed Document 00 65 19.26, "AGREEMENT AND RELEASE OF ANY AND ALL CLAIMS" from the Contractor.

21.2.5. The Contractor shall have made all corrections to the Work that are required to remedy any defects therein, to obtain compliance with the Contract Documents or any requirements of applicable codes and ordinances, or to fulfill any of the orders or directions of District required under the Contract Documents.

21.2.6. Each Subcontractor shall have delivered to the Contractor all written guarantees, warranties, applications, and bonds required by the Contract Documents for its portion of the Work.

21.2.7. Contractor must have completed all requirements set forth under "Close-Out/Certification Procedures," including, without limitation, submission of an approved set of complete Record Drawings.

21.2.8. Architect shall have issued its written approval that final payment can be made.

21.2.9. The Contractor shall have delivered to the District all manuals and materials required by the Contract Documents.

21.2.10. The Contractor shall have completed final clean-up as provided herein.

21.3. Retention

21.3.1. The retention, less any amounts disputed by the District or that the District has the right to withhold pursuant to provisions herein, shall be paid:

21.3.1.1. After approval of the District by the Architect's Certificate of Payment,

21.3.1.2. After the satisfaction of the conditions set forth herein, and

21.3.1.3. After forty-five (45) days after the recording of the Notice of Completion by District.

21.3.2. No interest shall be paid on any retention, or on any amounts withheld due to a failure of the Contractor to perform, in accordance with the terms and conditions of the Contract Documents, except as provided to the contrary in any Escrow Agreement between the District and the Contractor pursuant to Public Contract Code section 22300.

21.4. Substitution of Securities The District will permit the substitution of securities in accordance with the provisions of Public Contract Code section 22300.

22. UNCOVERING OF WORK

If a portion of the Work is covered without Inspector or Architect approval or not in compliance with the Contract Documents, it must, if required in writing by the District, the Project Inspector, or the Architect, be uncovered for the Project Inspector's or the Architect's observation and be replaced at the Contractor's expense without change in the Contract Price or Contract Time.

23. NONCONFORMING WORK AND CORRECTION OF WORK

23.1. Nonconforming Work

23.1.1. Contractor shall promptly remove from Premises all Work identified by District as failing to conform to the Contract Documents whether incorporated or not. Contractor shall promptly replace and re-execute its own Work to comply with the

Contract Documents without additional expense to the District and shall bear the expense of making good all work of other contractors destroyed or damaged by any removal or replacement pursuant hereto and/or any delays to the District or other Contractors caused thereby.

23.1.2. If Contractor does not remove Work that District has identified as failing to conform to the Contract Documents within a reasonable time, not to exceed **FORTY-EIGHT (48)** hours, District may remove it and may store any material at Contractor's expense. If Contractor does not pay expense(s) of that removal within ten (10) days' time thereafter, District may, upon ten (10) days' written notice, sell any material at auction or at private sale and shall deduct all costs and expenses incurred by the District and/or District may withhold those amounts from payment(s) to Contractor.

23.2. Correction of Work

23.2.1. Correction of Rejected Work

Pursuant to the notice provisions herein, the Contractor shall immediately correct the Work rejected by the District, the Architect, or the Project Inspector as failing to conform to the requirements of the Contract Documents, whether observed before or after Completion and whether or not fabricated, installed, or completed. The Contractor shall bear costs of correcting the rejected Work, including delay costs, additional testing, inspections, and compensation for the Inspector's or the Architect's services and expenses made necessary thereby.

23.2.2. One-Year Warranty Corrections

If, within one (1) year after the date of Completion of the Work or a designated portion thereof, or after the date for commencement of warranties established hereunder, or by the terms of an applicable special warranty required by the Contract Documents, any of the Work is found to be not in accordance with the requirements of the Contract Documents, the Contractor shall correct it promptly after receipt of written notice from the District to do so. This period of one (1) year shall be extended with respect to portions of the Work first performed after Completion by the period of time between Completion and the actual performance of the Work. This obligation hereunder shall survive acceptance of the Work under the Contract and termination of the Contract. The District shall give such notice promptly after discovery of the condition.

23.3. District's Right to Perform Work

23.3.1. If the Contractor should neglect to prosecute the Work properly or fail to perform any provisions of this contract, the District, after **FORTY-EIGHT (48)** hours written notice to the Contractor, may, without prejudice to any other remedy it may have, make good such deficiencies and may deduct the cost thereof from the payment then or thereafter due the Contractor.

23.3.2. If it is found at any time, before or after completion of the Work, that Contractor has varied from the Drawings and/or Specifications, including, but not

limited to, variation in material, quality, form, or finish, or in the amount or value of the materials and labor used, District may require at its option:

23.3.2.1. That all such improper Work be removed, remade or replaced, and all work disturbed by these changes be made good by Contractor at no additional cost to the District;

23.3.2.2. That the District deduct from any amount due Contractor the sum of money equivalent to the difference in value between the work performed and that called for by the Drawings and Specifications; or

23.3.2.3. That the District exercise any other remedy it may have at law or under the Contract Documents, including but not limited to the District hiring its own forces or another contractor to replace the Contractor's nonconforming Work, in which case the District shall either issue a deductive Change Order, a Construction Change Directive, or invoice the Contractor for the cost of that work. Contractor shall pay any invoices within thirty (30) days of receipt of same or District may withhold those amounts from payment(s) to Contractor.

24. TERMINATION AND SUSPENSION

24.1. District's Right to Terminate Contractor for Cause

24.1.1. Grounds for Termination The District, in its sole discretion, may terminate the Contract and/or terminate the Contractor's right to perform the work of the Contract based upon the following:

24.1.1.1. Contractor refuses or fails to execute the Work or any separable part thereof with sufficient diligence as will ensure its completion within the time specified or any extension thereof, or

24.1.1.2. Contractor fails to complete said Work within the time specified or any extension thereof, or

24.1.1.3. Contractor persistently fails or refused to perform Work or provide material of sufficient quality as to be in compliance with Contract Documents; or

24.1.1.4. Contractor files a petition for relief as a debtor, or a petition is filed against the Contractor without its consent, and the petition not dismissed within sixty (60) days; or

24.1.1.5. Contractor makes a general assignment for the benefit of its creditors, or a receiver is appointed on account of its insolvency; or

24.1.1.6. Contractor persistently or repeatedly refuses fails, except in cases for which extension of time is provided, to supply enough properly skilled workers or proper materials to complete the Work in the time specified; or

24.1.1.7. Contractor fails to make prompt payment to Subcontractors, or for material, or for labor; or

24.1.1.8. Contractor persistently disregards laws, or ordinances, or instructions of District; or

24.1.1.9. Contractor fails to supply labor, including that of Subcontractors, that can work in harmony with all other elements of labor employed or to be employed on the Work; or

24.1.1.10. Contractor or its Subcontractor(s) is/are otherwise in breach, default, or in substantial violation of any provision of this Contract, including but not limited to a lapse in licensing or registration.

24.1.2. Notification of Termination

24.1.2.1. Upon the occurrence at District's sole determination of any of the above conditions, District may, without prejudice to any other right or remedy, serve written notice upon Contractor and its Surety of District's termination of this Contract and/or the Contractor's right to perform the work of the Contract. This notice will contain the reasons for termination. Unless, within three (3) days after the service of the notice, any and all condition(s) shall cease, and any and all violation(s) shall cease, or arrangement satisfactory to District for the correction of the condition(s) and/or violation(s) be made, this Contract shall cease and terminate. Upon Determination, Contractor shall not be entitled to receive any further payment until the entire Work is finished.

24.1.2.2. Upon Termination, District may immediately serve written notice of tender upon Surety whereby Surety shall have the right to take over and perform this Contract only if Surety:

24.1.2.2.1. Within three (3) days after service upon it of the notice of tender, gives District written notice of Surety's intention to take over and perform this Contract; and

24.1.2.2.2. Commences performance of this Contract within (three (3) days from date of serving of its notice to District.

24.1.2.3. Surety shall not utilize Contractor in completing the Project if the District notifies Surety of the District's objection to Contractor's further participation in the completion of the Project. Surety expressly agrees that any contractor which Surety proposes to fulfill Surety's obligations is subject to District's approval. District's approval shall not be unreasonably withheld, conditioned or delayed.

24.1.2.4. If Surety fails to notify District or begin performance as indicated herein, District may take over the Work and execute the Work to completion by any method it may deem advisable at the expense of Contractor and/or its Surety. Contractor and/or its Surety shall be liable to District for any excess cost or other damages the District incurs thereby. Time is of the essence in this Contract. If the District takes over the Work as herein provided, District may, without liability for so doing, take possession of and utilize in completing the

Work such materials, appliances, plan, and other property belonging to Contractor as may be on the Site of the Work, in bonded storage, or previously paid for.

24.1.3. Effect of Termination

24.1.3.1. Contractor shall, only if ordered to do so by the District, immediately remove from the Site all or any materials and personal property belonging to Contractor that have not been incorporated in the construction of the Work, or which are not in place in the Work. The District retains the right, but not the obligation, to keep and use any materials and personal property belonging to Contractor that have not been incorporated in the construction of the Work, or which are not in place in the Work. The Contractor and its Surety shall be liable upon the performance bond for all damages caused the District by reason of the Contractor's failure to complete the Contract.

24.1.3.2. In the event that the District shall perform any portion of, or the whole of the Work, pursuant to the provisions of the General Conditions, the District shall not be liable nor account to the Contractor in any way for the time within which, or the manner in which, the Work is performed by the District or for any changes the District may make in the Work or for the money expended by the District in satisfying claims and/or suits and/or other obligations in connection with the Work.

24.1.3.3. In the event that the Contract is terminated for any reason, no allowances or compensation will be granted for the loss of any anticipated profit by the Contractor or any impact or impairment of Contractor's bonding capacity.

24.1.3.4. If the expense to the District to finish the Work exceeds the unpaid Contract Price, Contractor and Surety shall pay difference to District within twenty-one (21) days of District's request.

24.1.3.5. The District shall have the right (but shall have no obligation) to assume and/or assign to a general contractor or construction manager or other third party who is qualified and has sufficient resources to complete the Work, the rights of the Contractor under its subcontracts with any or all Subcontractors. In the event of an assumption or assignment by the District, no Subcontractor shall have any claim against the District or third party for Work performed by Subcontractor or other matters arising prior to termination of the Contract. The District or any third party, as the case may be, shall be liable only for obligations to the Subcontractor arising after assumption or assignment. Should the District so elect, the Contractor shall execute and deliver all documents and take all steps, including the legal assignment of its contractual rights, as the District may require, for the purpose of fully vesting in the District the rights and benefits of it Subcontractor under Subcontracts or other obligations or commitments. All payments due the Contractor hereunder shall be subject to a right of offset by the District for expenses and damages suffered by the District as a result of any default, acts, or omissions of the Contractor. Contractor must include this assignment provision in all of its contracts with its Subcontractors.

24.1.3.6. The foregoing provisions are in addition to and not in limitation of any other rights or remedies available to District.

24.1.4. Emergency Termination of Public Contracts Act of 1949

24.1.4.1. This Contract is subject to termination as provided by sections 4410 and 4411 of the Government Code of the State of California, being a portion of the Emergency Termination of Public Contracts Act of 1949.

24.1.4.1.1. Section 4410 of the Government Code states:

> In the event a national emergency occurs, and public work, being performed by contract, is stopped, directly or indirectly, because of the freezing or diversion of materials, equipment or labor, as the result of an order or a proclamation of the President of the United States, or of an order of any federal authority, and the circumstances or conditions are such that it is impracticable within a reasonable time to proceed with a substantial portion of the work, then the public agency and the contractor may, by written agreement, terminate said contract.

24.1.4.1.2. Section 4411 of the Government Code states:

> Such an agreement shall include the terms and conditions of the termination of the contract and provision for the payment of compensation or money, if any, which either party shall pay to the other or any other person, under the facts and circumstances in the case.

24.1.4.2. Compensation to the Contractor shall be determined at the sole discretion of District on the basis of the reasonable value of the Work done, including preparatory work. As an exception to the foregoing and at the District's discretion, in the case of any fully completed separate item or portion of the Work for which there is a separate previously submitted unit price or item on the accepted schedule of values, that price shall control. The District, at its sole discretion, may adopt the Contract Price as the reasonable value of the work done or any portion thereof.

24.2. Termination of Contractor for Convenience

24.2.1. District in its sole discretion may terminate the Contract upon three (3) days written notice to the Contractor. Under a termination for convenience, the District retains the right to all the options available to the District if there is a termination for cause. In case of a termination for convenience, the Contractor shall have no claims against the District except:

24.2.1.1. The actual cost for labor, materials, and services performed that is unpaid and can be documented through timesheets, invoices, receipts, or otherwise, and

24.2.1.2. Five percent (5%) of the total cost of work performed as of the date of termination, or five percent (5%) of the value of the Work yet to be performed,

whichever is less. This five percent (5%) amount shall be full compensation for all Contractor's and Subcontractor(s)' mobilization and/or demobilization costs and any anticipated loss profits resulting from termination of the Contractor for convenience.

24.3. Suspension of Work

24.3.1. District in its sole discretion may suspend, delay or interrupt the Work in whole or in part for such period of time as the District may determine upon three (3) days written notice to the Contractor.

24.3.1.1. An adjustment may be made for changes in the cost of performance of the Work caused by any such suspension, delay or interruption. No adjustment shall be made to the extent:

24.3.1.1.1. That performance is, was or would have been so suspended, delayed or interrupted by another cause for which Contractor is responsible; or

24.3.1.1.2. That an equitable adjustment is made or denied under another provision of the Contract; or

24.3.1.1.3. That the suspension of Work was the direct or indirect result of Contractor's failure to perform any of its obligations hereunder.

24.3.1.2. Any adjustments in cost of performance may have a fixed or percentage fee as provided in the section on Format for Proposed Change Order herein. This amount shall be full compensation for all Contractor's and its Subcontractor(s)' changes in the cost of performance of the Contract caused by any such suspension, delay or interruption.

25. CLAIMS AND DISPUTES

25.1. Performance During Dispute or Claim Process

Contractor shall continue to perform its Work under the Contract and shall not cause a delay of the Work during any dispute, claim, negotiation, mediation, or arbitration proceeding, except by written agreement by the District.

25.2. Definition of Dispute

25.2.1. The term "Dispute" means a separate demand by the Contractor for:

25.2.1.1. A time extension;

25.2.1.2. Payment of money or damages arising from Work done by or on behalf of the Contractor pursuant to the Contract and payment of which is not otherwise expressly provided for or Contractor is not otherwise entitled to; or

25.2.1.3. An amount of payment disputed by the District.

25.3. Dispute Presentation

25.3.1. If Contractor intends to apply for an increase in the Contract Price or Contract Time for any reason including, without limitation, the acts of District or its agents, Contractor shall, within ten (10) days after the event giving rise to the Dispute, give notice of the Dispute in writing and submit to the District a written statement of the damage sustained or time requested. On or before twenty (20) days after Contractor's written Notice of Dispute, Contractor shall file with the District an itemized statement of the details and amounts of its Dispute for any increase in the Contract Price of Contract Time. Otherwise, Contractor shall have waived and relinquished its dispute against the District and Contractor's claims for compensation or an extension of time shall be forfeited and invalidated. Contractor shall not be entitled to consideration for payment or time on account.

25.3.2. The Notice of Dispute shall identify:

25.3.2.1. The issues, events, conditions, circumstances and/or causes giving rise to the dispute;

25.3.2.2. The pertinent dates and/or durations and actual and/or anticipated effects on the Contract Price, Contract Schedule milestones and/or Contract Time adjustments; and

25.3.2.3. The line-item costs for labor, material, and/or equipment, if applicable.

25.3.3. The Notice of Dispute shall include the following certification by the Contractor:

25.3.3.1. The undersigned Contractor certifies under penalty of perjury that the attached dispute is made in good faith; that the supporting data is accurate and complete to the best of my knowledge and belief; that the amount requested accurately reflects the adjustment for which Contractor believes the District is liable; and that I am duly authorized to certify the dispute on behalf of the Contractor.

25.3.3.2. Furthermore, Contractor understands that the value of the attached dispute expressly includes any and all of the Contractor's costs and expenses, direct and indirect, resulting from the Work performed on the Project, additional time required on the Project and/or resulting from delay to the Project. Any costs, expenses, damages, or time extensions not included are deemed waived.

25.3.4. If a Dispute, or any portion thereof, remains unresolved upon satisfaction of all applicable Dispute Resolution requirements, the Contractor shall comply with all claim resolution requirements as provided in Public Contract Code section 20104.

25.3.5. Contractor shall bind its Subcontractors to the provisions of this section and will hold the District harmless against disputes by Subcontractors.

25.4. Dispute Resolution

25.4.1. Contractor shall file with the District the Notice of Dispute, including the documents necessary to substantiate it, on or before the day of submitting the application for final payment.

25.4.2. District shall respond in writing within forty-five (45) days of receipt of the Dispute or may request in writing within thirty (30) days of receipt of the Dispute any additional documentation supporting the Dispute or relating to defenses or claims District may have against the Contractor.

25.4.2.1. If additional information is required, it shall be requested and provided by mutual agreement of the parties.

25.4.2.2. District's written response to the documented Dispute shall be submitted to the Contractor within fifteen (15) days after receipt of the further documentation or within a period of time no greater than that taken by the Contractor to produce the additional information, whichever is greater.

25.4.3. If Contractor disputes the District's written response, Contractor may file a claim pursuant to the Claim Resolution requirements provided herein.

25.5. Definition of Claim

25.5.1. The term "Claim" means a dispute that remains unresolved at the conclusion of the Dispute Resolution requirements as provided herein.

25.6. Claim Presentations

25.6.1. Contractor must timely submit the Notice of Claim and all documents necessary to substantiate any Claim. Otherwise, Contractor shall have waived and relinquished its Claim against the District and Contractor's Claims for compensation or an extension of time shall be forfeited and invalidated, and Contractor shall not be entitled to consideration for payment or time on account of the instant matter. No Claim shall be presented prior to Project completion. Any statute that might otherwise govern the presentation of an unresolved Dispute, including but not limited to Government Code section 900 et seq. and Public Contract Code section 20104 et seq. shall be tolled for all purposes during the course of construction on the Project.

25.6.1.1. All Claims shall include the following certification by the Contractor:

25.6.1.1.1. The undersigned Contractor certifies under penalty of perjury that the attached claim is made in good faith; that the supporting data is accurate and complete to the best of my knowledge and belief; that the amount requested accurately reflects the adjustment for which Contractor believes the District is liable; and that I am duly authorized to certify the claim on behalf of the Contractor.

25.6.1.1.2. Furthermore, Contractor understands that the value of the attached claim expressly includes any and all of the Contractor's costs and

expenses, direct and indirect, resulting from the Work performed on the Project, additional time required on the Project and/or resulting from delay to the Project. Any costs, expenses, damages, or time extensions not included are deemed waived.

25.6.2. The attention of the Contractor is drawn to Government Code section 12650, et seq. regarding penalties for false claims.

25.6.3. If a Claim, or any portion thereof, remains in dispute upon satisfaction of all applicable Dispute and Claim Resolution requirements, the Contractor shall comply with all claims presentation requirements as provided in Chapter 1 (commencing with section 900) and Chapter 2 (commencing with section 910) of Part 3 of Division 3.6 of Title 1 of Government Code as a condition precedent to the Contractor's right to bring a civil action against the District. For purposes of those provisions, the running of the time within which a Dispute or Claim must be presented to the District shall be tolled from the time the Contractor submits its written Dispute or Claim until the time the Dispute or Claim is denied, including any time utilized by any applicable meet and confer process.

25.6.4. The Contractor shall bind all its Subcontractors to the provisions of this section and will hold the District harmless against claims by Subcontractors.

25.7. Claim Resolution

25.7.1. In the event of a disagreement between the parties as to performance of the Work, the interpretation of this Contract, or payment or nonpayment for Work performed or not performed, the parties shall, after the conclusion of the Dispute Resolution requirements, attempt to resolve the Claim by those procedures set forth herein.

25.7.2. Claims of $375,000 or Less

25.7.2.1. For all Claims of three hundred seventy-five thousand dollars ($375,000) or less which arise between Contractor and District, the procedure set forth in Public Contract Code section 20104 et seq. shall apply:

25.7.2.1.1. Contractor shall file with the District any written Claim, including the documents necessary to substantiate it, upon the application for final payment.

25.7.2.1.2. For claims of less than fifty thousand dollars ($50,000), the District shall respond in writing within forty-five (45) days of receipt of the Claim or may request in writing within thirty (30) days of receipt of the Claim any additional documentation supporting the claim or relating to defenses or claims the District may have against the Contractor.

25.7.2.1.2.1. If additional information is required, it shall be requested and provided by mutual agreement of the parties.

25.7.2.1.2.2. District's written response to the documented Claim shall be submitted to the Contractor within fifteen (15) days after receipt of the further documentation or within a period of time no greater than that taken by the Contractor to produce the additional information, whichever is greater.

25.7.2.1.3. For claims of over fifty thousand dollars ($50,000) and less than or equal to three hundred seventy-five thousand dollars ($375,000), the District shall respond in writing to all written Claims within sixty (60) days of receipt of the claim, or may request, in writing, within thirty (30) days of receipt of the Claim any additional documentation supporting the Claim or relating to defenses or claims the District may have against the Contractor.

25.7.2.1.3.1. If additional information is required, it shall be requested and provided upon mutual agreement of the District and the Contractor.

25.7.2.1.3.2. The District's written response to the claim, as further documented, shall be submitted to the Contractor within thirty (30) days after receipt of the further documentation, or within a period of time no greater than that taken by the Contractor to produce the additional information or requested documentation, whichever is greater.

25.7.2.2. If Contractor disputes the District's written response, or the District fails to respond within the time prescribed, Contractor may so notify the District, in writing, either within fifteen (15) days of receipt of the District's response or within fifteen (15) days of the District's failure to respond within the time prescribed, respectively, and demand an informal conference to meet and confer for settlement of the issues in dispute. Upon a demand, the District shall schedule a meet and confer conference within thirty (30) days for settlement of the dispute.

25.7.2.3. Following the meet and confer conference, if the claim or any portion of it remains in dispute, the Contractor may file a claim as provided in Chapter 1 (commencing with Section 900) and Chapter 2 (commencing with Section 910) of Part 3 of Division 3.6 of Title 1 of the Government Code. For purposes of those provisions the running of the time within which a claim must be filed shall be tolled from the time the Contractor submits its written Claim until the time the Claim is denied, including any period of time utilized by the meet and confer process.

25.7.2.4. For any civil action filed to resolve claims filed pursuant to this section, within sixty (60) days, but no earlier than thirty (30) days, following the filing of responsive pleadings, the court shall submit the matter to nonbinding mediation unless waived by mutual stipulation of both parties. The mediation process shall provide for the selection within fifteen (15) days by both parties of a disinterested third person as mediator, shall be commenced within thirty (30) days of the submittal, and shall be concluded within fifteen (15) days from the commencement of the mediation unless a time requirement is extended upon a good cause showing to the court or by stipulation of both parties. If the parties

fail to select a mediator within the 15-day period, any party may petition the court to appoint the mediator.

25.7.2.5. [Reserved].

25.7.2.6. The District shall not fail to pay money as to any portion of a Claim which is undisputed except as otherwise provided in the Contract Documents. In any suit filed pursuant to this section, the District shall pay interest at the legal rate on any arbitration award or judgment. Interest shall begin to accrue on the date the suit is filed in a court of law.

25.7.3. Claims Over $375,000

25.7.3.1. For all Claims of over three hundred seventy-five thousand dollars ($375,000) which arise between a Contractor and the District, the following procedure shall apply:

25.7.3.1.1. The parties agree to first endeavor to settle the dispute in an amicable manner by mediation before having recourse to a judicial forum. The Claim shall be identified in writing to the District within thirty (30) days from the date of Contractor's application for final payment of all Contract balances not in dispute and shall be mediated within one hundred and twenty (120) days from the submission of the Claim to the District. Mediator fees and administrative costs of the mediation shall be shared equally by the parties.

25.7.3.1.2. District may assert any counter-claims it has for damages against Contractor, including, but not limited to, defective Work, delay damages, and liquidated damages.

25.7.4. Contractor shall bind its Subcontractors to the provisions of this section and will hold the District harmless against disputes by Subcontractors.

25.8. Dispute and Claim Resolution Non-Applicability

25.8.1. The procedures for dispute and claim resolutions set forth in this Article shall not apply to the following:

25.8.1.1. Personal injury, wrongful death or property damage claims;

25.8.1.2. Latent defect or breach of warranty or guarantee to repair;

25.8.1.3. Stop payment notices;

25.8.1.4. District's rights set forth in the Article on Suspension and Termination;

25.8.1.5. Disputes arising out of State labor compliance, if applicable; or

25.8.1.6. District rights and obligations as a public entity set forth in applicable statutes; provided, however, that penalties imposed against a public entity by

statutes, including, but not limited to, Public Contract Code sections 20104.50 and 7107, shall be subject to the Dispute and Claim Resolution requirements provided in this Article.

25.8.1.7. District's rights to seek provisional equitable remedies, including temporary retraining orders or preliminary injunctive relief.

25.9. Contractor's costs incurred in seeking relief under this Article are not recoverable from the District.

26. STATE LABOR, WAGE & HOUR, APPRENTICE, AND RELATED PROVISIONS

26.1. Labor Compliance and Enforcement

Since this Project is subject to labor compliance and enforcement by the Department of Industrial Relations ("DIR"), Contractor specifically acknowledges and understands that it shall perform the Work of this Agreement while complying with all the applicable provisions of Division 2, Part 7, Chapter 1, of the Labor Code and Title 8 of the California Code of Regulations, including, without limitation, the requirement that the Contractor and all Subcontractors shall timely furnish complete and accurate electronic certified payroll records directly to the DIR. The District may not issue payment if this requirement is not met.

26.2. Wage Rates, Travel, and Subsistence

26.2.1. Pursuant to the provisions of article 2 (commencing at section 1770), chapter 1, part 7, division 2, of the Labor Code of California, the general prevailing rate of per diem wages and the general prevailing rate for holiday and overtime work in the locality in which this public work is to be performed for each craft, classification, or type of worker needed to execute this Contract are on file at the District's principal office and copies will be made available to any interested party on request. Contractor shall obtain and post a copy of these wage rates at the job site.

26.2.2. Holiday and overtime work, when permitted by law, shall be paid for at the general prevailing rate of per diem wages for holiday and overtime work on file with the Director of the Department of Industrial Relations, unless otherwise specified. The holidays upon which those rates shall be paid need not be specified by the District, but shall be all holidays recognized in the applicable collective bargaining agreement. If the prevailing rate is not based on a collectively bargained rate, the holidays upon which the prevailing rate shall be paid shall be as provided in Section 6700 of the Government Code.

26.2.3. Contractor shall pay and shall cause to be paid each worker engaged in Work on the Project the general prevailing rate of per diem wages determined by the Director of the Department of Industrial Relations, regardless of any contractual relationship which may be alleged to exist between Contractor or any Subcontractor and such workers.

26.2.4. If during the period this bid is required to remain open, the Director of the Department of Industrial Relations determines that there has been a change in any

prevailing rate of per diem wages in the locality in which the Work under the Contract is to be performed, such change shall not alter the wage rates in the Notice to Bidders or the Contract subsequently awarded.

26.2.5. Pursuant to Labor Code section 1775, Contractor shall, as a penalty to District, forfeit the statutory amount (believed by the District to be currently up to two hundred dollars ($200) for each calendar day, or portion thereof, for each worker paid less than the prevailing rates, determined by the District and/or the Director, for the work or craft in which that worker is employed for any public work done under Contract by Contractor or by any Subcontractor under it. The difference between such prevailing wage rates and the amount paid to each worker for each calendar day or portion thereof for which each worker was paid less than the prevailing wage rate shall be paid to each worker by Contractor.

26.2.6. Any worker employed to perform Work on the Project, which Work is not covered by any classification listed in the general prevailing wage rate of per diem wages determined by the Director, shall be paid not less than the minimum rate of wages specified therein for the classification which most nearly corresponds to Work to be performed by him, and such minimum wage rate shall be retroactive to time of initial employment of such person in such classification.

26.2.7. Pursuant to Labor Code section 1773.1, per diem wages are deemed to include employer payments for health and welfare, pension, vacation, travel time, subsistence pay, and apprenticeship or other training programs authorized by Labor Code section 3093, and similar purposes.

26.2.8. Contractor shall post at appropriate conspicuous points on the Site of Project, a schedule showing all determined minimum wage rates and all authorized deductions, if any, from unpaid wages actually earned. In addition, Contractor shall post a sign-in log for all workers and visitors to the Site, a list of all subcontractors of any tier on the Site, and the required Equal Employment Opportunity poster(s).

26.3. Hours of Work

26.3.1. As provided in article 3 (commencing at section 1810), chapter 1, part 7, division 2, of the Labor Code, eight (8) hours of labor shall constitute a legal days work. The time of service of any worker employed at any time by Contractor or by any Subcontractor on any subcontract under this Contract upon the Work or upon any part of the Work contemplated by this Contract shall be limited and restricted by Contractor to eight (8) hours per day, and forty (40) hours during any one week, except as hereinafter provided. Notwithstanding the provisions hereinabove set forth, Work performed by employees of Contractor in excess of eight (8) hours per day and forty (40) hours during any one week, shall be permitted upon this public work upon compensation for all hours worked in excess of eight (8) hours per day at not less than one and one-half times the basic rate of pay.

26.3.2. Contractor shall keep and shall cause each Subcontractor to keep an accurate record showing the name of and actual hours worked each calendar day and each calendar week by each worker employed by Contractor in connection with the Work or any part of the Work contemplated by this Contract. The record shall be

kept open at all reasonable hours to the inspection of District and to the Division of Labor Standards Enforcement of the DIR.

26.3.3. Pursuant to Labor Code section 1813, Contractor shall as a penalty to the District forfeit the statutory amount (believed by the District to be currently twenty-five dollars ($25)) for each worker employed in the execution of this Contract by Contractor or by any Subcontractor for each calendar day during which such worker is required or permitted to work more than eight (8) hours in any one calendar day and forty (40) hours in any one calendar week in violation of the provisions of article 3 (commencing at section 1810), chapter 1, part 7, division 2, of the Labor Code.

26.3.4. Any Work necessary to be performed after regular working hours, or on Sundays or other holidays shall be performed without additional expense to the District.

26.4. Payroll Records

26.4.1. Contractor shall upload, and shall cause each Subcontractor performing any portion of the Work under this Contract to upload, an accurate and complete certified payroll record ("CPR") using the Public Works Payroll Reporting Form, including certification (DIR Form A-1-131 or current version), and Statement of Employer Payments (DIR Form PW 26) through the eCPR application using PDF to the DIR at https://apps.dir.ca.gov/ecpr/DAS/AltLogin or current application and URL, showing the name, address, social security number, work classification, straight time, and overtime hours worked each day and week, and the actual per diem wages paid to each journeyman, apprentice, worker, or other employee employed by the Contractor and/or each Subcontractor in connection with the Work.

26.4.1.1. The CPRs enumerated hereunder shall be filed directly with the DIR on a weekly basis or to the requesting party, whether the District or DIR, within ten (10) days after receipt of each written request. The CPRs from the Contractor and each Subcontractor for each week shall be provided on or before Wednesday of the week following the week covered by the CPRs. District may not make any payment to Contractor until:

26.4.1.1.1. Contractor and/or its Subcontractor(s) provide CPRs acceptable to the DIR; and

26.4.1.1.2. Any delay in Contractor and/or its Subcontractor(s) providing CPRs to the DIR in a timely manner may directly delay Contractor's payment.

26.4.2. All CPRs shall be available for inspection at all reasonable hours at the principal office of Contractor on the following basis:

26.4.2.1. A certified copy of an employee's CPR shall be made available for inspection or furnished to the employee or his/her authorized representative on request.

26.4.2.2. CPRs shall be made available for inspection or furnished upon request to a representative of District, Division of Labor Standards Enforcement, Division of Apprenticeship Standards, and/or the DIR.

26.4.2.3. CPRs shall be made available upon request by the public for inspection or copies thereof made; provided, however, that a request by the public shall be made through the District, Division of Apprenticeship Standards, or the Division of Labor Standards Enforcement. If the requested CPRs have not been provided pursuant to the provisions herein, the requesting party shall, prior to being provided the records reimburse the costs of preparation by Contractor, Subcontractors, and the entity through which the request was made. The public shall not be given access to the records at the principal office of Contractor.

26.4.3. Any copy of records made available for inspection as copies and furnished upon request to the public or any public agency by District, Division of Apprenticeship Standards, or Division of Labor Standards Enforcement shall be marked or obliterated in such a manner as to prevent disclosure of an individual's name, address, and social security number. The name and address of Contractor awarded Contract or performing Contract shall not be marked or obliterated.

26.4.4. Contractor shall inform District of the location of the records enumerated hereunder, including the street address, city, and county, and shall, within five (5) working days, provide a notice of change of location and address.

26.4.5. In the event of noncompliance with the requirements of this section, Contractor shall have ten (10) days in which to comply subsequent to receipt of written notice specifying in what respects Contractor must comply with this section. Should noncompliance still be evident after the ten (10) day period, Contractor shall, as a penalty to District, forfeit up to one hundred dollars ($100) for each calendar day, or portion thereof, for each worker, until strict compliance is effectuated. Upon the request of Division of Apprenticeship Standards or Division of Labor Standards Enforcement, these penalties shall be withheld from progress payments then due.

26.5. [RESERVED]

26.6. Apprentices

26.6.1. Contractor acknowledges and agrees that, if this Contract involves a dollar amount greater than or a number of working days greater than that specified in Labor Code section 1777.5, then this Contract is governed by the provisions of Labor Code Section 1777.5. It shall be the responsibility of Contractor to ensure compliance with this Article and with Labor Code section 1777.5 for all apprenticeship occupations.

26.6.2. Apprentices of any crafts or trades may be employed and, when required by Labor Code section 1777.5, shall be employed provided they are properly registered in full compliance with the provisions of the Labor Code.

26.6.3. Every such apprentice shall be paid the standard wage paid to apprentices under the regulations of the craft or trade at which he/she is employed, and shall be employed only at the work of the craft or trade to which she/he is registered.

26.6.4. Only apprentices, as defined in section 3077 of the Labor Code, who are in training under apprenticeship standards and written apprentice agreements under chapter 4 (commencing at section 3070), division 3, of the Labor Code, are eligible to be employed. The employment and training of each apprentice shall be in accordance with the provisions of the apprenticeship standards and apprentice agreements under which he/she is training.

26.6.5. Pursuant to Labor Code section 1777.5, if that section applies to this Contract as indicated above, Contractor and any Subcontractors employing workers in any apprenticeable craft or trade in performing any Work under this Contract shall apply to the applicable joint apprenticeship committee for a certificate approving the Contractor or Subcontractor under the applicable apprenticeship standards and fixing the ratio of apprentices to journeymen employed in performing the Work.

26.6.6. Pursuant to Labor Code section 1777.5, if that section applies to this Contract as indicated above, Contractor and any Subcontractor may be required to make contributions to the apprenticeship program.

26.6.7. If Contractor or Subcontractor willfully fails to comply with Labor Code section 1777.5, then, upon a determination of noncompliance by the Administrator of Apprenticeship, it shall:

26.6.7.1. Be denied the right to bid on any subsequent project for one (1) year from the date of such determination;

26.6.7.2. Forfeit as a penalty to District the full amount as stated in Labor Code section 1777.7. Interpretation and enforcement of these provisions shall be in accordance with the rules and procedures of the California Apprenticeship Council and under the authority of the Chief of the Division of Apprenticeship Standards.

26.6.8. Contractor and all Subcontractors shall comply with Labor Code section 1777.6, which section forbids certain discriminatory practices in the employment of apprentices.

26.6.9. Contractor shall become fully acquainted with the law regarding apprentices prior to commencement of the Work. Special attention is directed to sections 1777.5, 1777.6, and 1777.7 of the Labor Code, and title 8, California Code of Regulations, section 200 et seq. Questions may be directed to the State Division of Apprenticeship Standards, 455 Golden Gate Avenue, San Francisco, California 94102.

26.7. Non-Discrimination

26.7.1. Contractor herein agrees not to discriminate in its recruiting, hiring, promotion, demotion, or termination practices on the basis of race, religious creed, national origin, ancestry, sex, age, or physical handicap in the performance of this

Contract and to comply with the provisions of the California Fair Employment and Housing Act as set forth in part 2.8 of division 3 of the California Government Code, commencing at section 12900; the Federal Civil Rights Act of 1964, as set forth in Public Law 88-352, and all amendments thereto; Executive Order 11246, and all administrative rules and regulations found to be applicable to Contractor and Subcontractor.

26.7.2. Special requirements for Federally Assisted Construction Contracts: During the performance of this Contract, Contractor agrees to incorporate in all subcontracts the provisions set forth in Chapter 60-1.4(b) of Title 41 published in Volume 33 No. 104 of the Federal Register dated May 28, 1968.

26.8. Labor First Aid

Contractor shall maintain emergency first aid treatment for Contractor's workers on the Project which complies with the Federal Occupational Safety and Health Act of 1970 (29 U.S.C. § 651 et seq.) and the California Occupational Safety and Health Act of 1973 (8 Cal. Code of Regs., §1 et seq.).

27. [RESERVED]

28. MISCELLANEOUS

28.1. Assignment of Antitrust Actions

28.1.1. Section 7103.5(b) of the Public Contract Code states:

> In entering into a public works contract or subcontract to supply goods, services, or materials pursuant to a public works contract, the Contractor or subcontractor offers and agrees to assign to the awarding body all rights, title, and interest in and to all causes of action it may have under Section 4 of the Clayton Act (15 U.S.C. Sec. 15) or under the Cartwright Act (Chapter 2 (commending with Section 16700) of Part 2 of Division 7 of the Business and Professions Code), arising from purchases of goods, made and become effective at the time the awarding body tenders final payment to the Contractor, without further acknowledgment by the parties.

28.1.2. Section 4552 of the Government Code states:

> In submitting a bid to a public purchasing body, the bidder offers and agrees that if the bid is accepted, it will assign to the purchasing body all rights, title, and interest in and to all causes of action it may have under Section 4 of the Clayton Act (15 U.S.C. Sec. 15) or under the Cartwright Act (Chapter 2 (commencing with Section 16700) of Part 2 of Division 7 of the Business and Professions Code), arising from purchases of goods, materials, or services by the bidder for sale to the purchasing body pursuant to the bid. Such assignment shall be made and become effective at the time the purchasing body tenders final payment to the bidder.

28.1.3. Section 4553 of the Government Code states:

If an awarding body or public purchasing body receives, either through judgment or settlement, a monetary recovery for a cause of action assigned under this chapter, the assignor shall be entitled to receive reimbursement for actual legal costs incurred and may, upon demand, recover from the public body any portion of the recovery, including treble damages, attributable to overcharges that were paid by the assignor but were not paid by the public body as part of the bid price, less the expenses incurred in obtaining that portion of the recovery.

28.1.4. Section 4554 of the Government Code states:

Upon demand in writing by the assignor, the assignee shall, within one year from such demand, reassign the cause of action assigned under this part if the assignor has been or may have been injured by the violation of law for which the cause of action arose and (a) the assignee has not been injured thereby, or (b) the assignee declines to file a court action for the cause of action.

28.1.5. Under this Article, "public purchasing body" is District and "bidder" is Contractor.

28.2. Excise Taxes

If, under Federal Excise Tax Law, any transaction hereunder constitutes a sale on which a Federal Excise Tax is imposed and the sale is exempt from such Federal Excise Tax because it is a sale to a State or Local Government for its exclusive use, District, upon request, will execute documents necessary to show (1) that District is a political subdivision of the State for the purposes of such exemption, and (2) that the sale is for the exclusive use of District. No Federal Excise Tax for such materials shall be included in any Contract Price.

28.3. Taxes

Contract Price is to include any and all applicable sales taxes or other taxes that may be due in accordance with section 7051 of the Revenue and Taxation Code; Regulation 1521 of the State Board of Equalization or any other tax code that may be applicable.

28.4. Shipments

All shipments must be F.O.B. destination to Site or sites, as indicated in the Contract Documents. There must be no charge for containers, packing, unpacking, drayage, or insurance. The total Contract Price shall be all inclusive (including sales tax) and no additional costs of any type will be considered.

28.5. Compliance with Government Reporting Requirements

If this Contract is subject to federal or other governmental reporting requirements because of federal or other governmental financing in whole or in part for the Project of which it is part, or for any other reason, Contactor shall comply with those reporting requirements at the request of the District at no additional cost.

END OF DOCUMENT

DOCUMENT 00 73 13

SPECIAL CONDITIONS

1. Mitigation Measures

Contractor shall comply with all applicable mitigation measures, if any, adopted by any public agency with respect to this Project pursuant to the California Environmental Quality Act. (Public Resources Code section 21000 et seq.)

2. Modernization Projects

2.1. Access. Access to the school buildings and entry to buildings, classrooms, restrooms, mechanical rooms, electrical rooms, or other rooms, for construction purposes, must be coordinated with District and onsite District personnel before Work is to start. Unless agreed to otherwise in writing, only a school custodian will be allowed to unlock and lock doors in existing building(s). The custodian will be available only while school is in session. If a custodian is required to arrive before 7:00 a.m. or leave after 3:30 p.m. to accommodate Contractor's Work, the overtime wages for the custodian will be paid by the Contractor, unless at the discretion of the District, other arrangements are made in advance.

2.2. Maintaining Services. The Contractor is advised that Work is to be performed in spaces regularly scheduled for instruction. Interruption and/or periods of shutdown of public access, electrical service, water service, lighting, or other utilities shall be only as arranged in advance with the District. Contractor shall provide temporary services to all facilities interrupted by Contractor's Work.

2.3. Maintaining Utilities. The Contractor shall maintain in operation during duration of Contract, drainage lines, storm drains, sewers, water, gas, electrical, steam, and other utility service lines within working area.

2.4. Confidentiality. Contractor shall maintain the confidentiality of all information, documents, programs, procedures and all other items that Contractor encounters while performing the Work. This requirement shall be ongoing and shall survive the expiration or termination of this Contract and specifically includes, without limitation, all student, parent, and employee disciplinary information and health information.

2.5. Work During Instructional Time. By submitting its bid, Contractor affirms that Work may be performed during ongoing instruction in existing facilities. If so, Contractor agrees to cooperate to the best of its ability to minimize any disruption to the school up to, and including, rescheduling specific work activities, at no additional cost to District.

2.6. No Work During Student Testing. Contractor shall, at no additional cost to the District and at the District's request, coordinate its Work to not disturb District students including, without limitation, not performing any Work when students at the Site are taking State-required tests.

3. Substitution for Specified Items

3.1. Whenever in the Specifications any materials, process, or article is indicated or specified by grade, patent, or proprietary name, or by name of manufacturer, that Specification shall be deemed to be followed by the words "or equal." Contractor may, unless otherwise stated, offer any material, process, or article that shall be substantially equal or better in every respect to that so indicated or specified.

3.1.1. If the material, process, or article offered by Contractor is not, in the opinion of the District, substantially equal or better in every respect to that specified, then Contractor shall furnish the material, process, or article specified in the Specifications without any additional compensation or change order.

3.1.2. This provision shall not be applicable with respect to any material, product, thing or service for which District made findings and gave notice in accordance with Public Contract Code section 3400(c); therefore, Contractor shall not be entitled to request a substitution with respect to those materials, products or services.

3.2. A request for a substitution shall be submitted as follows:

3.2.1. Contractor shall notify the District in writing of any request for a substitution at least ten (10) days prior to bid opening as indicated in the Instructions to Bidders.

3.2.2. Requests for Substitutions after award of the Contract shall be submitted within thirty-five (35) days of the date of the Notice of Award.

3.3. Within 35 days after the date of the Notice of Award, Contractor shall provide data substantiating a request for substitution of "an equal" item, including but not limited to the following:

3.3.1. All variations of the proposed substitute from the material specified including, but not limited to, principles of operation, materials, or construction finish, thickness or gauge of materials, dimensions, weight, and tolerances;

3.3.2. Available maintenance, repair or replacement services;

3.3.3. Increases or decreases in operating, maintenance, repair, replacement, and spare parts costs;

3.3.4. Whether or not acceptance of the substitute will require other changes in the Work (or in work performed by the District or others under Contract with the District); and

3.3.5. The time impact on any part of the Work resulting directly or indirectly from acceptance of the proposed substitute.

3.4. No substitutions shall be made until approved, in writing, by the District. The burden of proof as to equality of any material, process, or article shall rest with Contractor. The Contractor warrants that if substitutes are approved:

3.4.1. The proposed substitute is equal or superior in all respects to that specified, and that such proposed substitute is suitable and fit for the intended purpose and will perform adequately the function and achieve the results called for by the general design and the Contract Documents;

3.4.2. The Contractor provides the same warranties and guarantees for the substitute that would be provided for that specified;

3.4.3. The Contractor shall be fully responsible for the installation of the substitute and any changes in the Work required, either directly or indirectly, because of the acceptance of such substitute, with no increase in Contract Price or Contract Time. Incidental changes or extra component parts required to accommodate the substitute will be made by the Contractor without a change in the Contract Price or Contract Time;

3.4.4. The Contractor shall be responsible for any re-design costs occasioned by District's acceptance and/or approval of any substitute; and

3.4.5. The Contractor shall, in the event that a substitute is less costly than that specified, credit the District with one hundred percent (100%) of the net difference between the substitute and the originally specified material. In this event, the Contractor agrees to execute a deductive Change Order to reflect that credit.

3.5. In the event Contractor furnishes a material, process, or article more expensive than that specified, the difference in the cost of that material, process, or article so furnished shall be borne by Contractor.

3.6. In no event shall the District be liable for any increase in Contract Price or Contract Time due to any claimed delay in the evaluation of any proposed substitute or in the acceptance or rejection of any proposed substitute.

3.7. Contractor shall be responsible for any costs the District incurs for professional services and/or DSA fees or delay to the Project Schedule, if applicable, while DSA reviews changes for the convenience of Contractor and/or to accommodate Contractor's means and methods. District may deduct those costs from any amounts owing to the Contractor for the review of the request for substitution, even if the request for substitution is not approved. District, at its sole discretion, shall deduct from the payments due to and/or invoice Contractor for all the professional services and/or DSA fees or delay to the Project Schedule, if applicable, while DSA reviews changes for the convenience of Contractor and/or to accommodate Contractor's means and methods arising herein.

4. Weather Days

Delays due to Adverse Weather conditions will only be permitted in compliance with the provisions in the General Conditions and only if the number of days of Adverse Weather exceeds the following parameters and Contractor can verify that the excess days of Adverse Weather caused delays:

January	**11**	July	**0**
February	**10**	August	**0**
March	**10**	September	**1**
April	**6**	October	**4**
May	**3**	November	**7**
June	**1**	December	**10**

5. Insurance Policy Limits

All of Contractor's insurance shall be with insurance companies with an A.M. Best rating of no less than __A: VII_ The limits of insurance shall not be less than:

Commercial General Liability	Product Liability and Completed Operations, Fire Damage Liability – Split Limit	$1,000,000 Per occurrence; $2,000,000 aggregate

6. Permits, Certificates, Licenses, Fees, Approval

6.1. Payment of Fees for Permits, Certificates, Licenses, and Registrations. As required in the General Conditions, the Contractor shall secure and pay for all permits, licenses, registrations, and certificates necessary for the prosecution of the Work with the exception of the following:

6.1.1. WATER CONNECTION FEES

6.1.2. SEWER CONNECTION FEES

6.1.3. STORM DRAIN CONNECTION FEES

With respect to the above listed items, Contractor shall be responsible for securing such items; however, District will be responsible for payment of these charges or fees. Contractor shall notify the District of the amount due with respect to such items and to whom the amount is payable. Contractor shall provide the District with an invoice and receipt with respect to such charges or fees.

6.2. General Permit For Storm Water Discharges Associated With Construction and Land Disturbance Activities

6.2.1. Contractor acknowledges that all California community college districts are obligated to develop and implement the following requirements for the discharge of storm water to surface waters from its construction and land disturbance activities (storm water requirements), without limitation:

6.2.1.1. Municipal Separate Storm Sewer System (MS4) is a system of conveyances used to collect and/or convey storm water, including, without limitation, catch basins, curbs, gutters, ditches, man-made channels, and storm drains.

6.2.1.2. Storm Water Pollution Prevention Plan (SWPPP) contains specific best management practices (BMPs) and establishes numeric effluent limitations at:

6.2.1.2.1. Sites where the District engages in maintenance (e.g., fueling, cleaning, repairing) for transportation activities.

6.2.1.2.2. Construction sites where:

6.2.1.2.2.1. One (1) or more acres of soil will be disturbed, or

6.2.1.2.2.2. The project is part of a larger common plan of development that disturbs more than one (1) acre of soil.

6.2.2. Contractor shall comply with any District storm water requirements that are approved by the District and applicable to the Project, at no additional cost to the District.

6.2.3. At no additional cost to the District, Contractor shall provide a Qualified Storm Water Practitioner who shall be onsite and implement and monitor any and all SWPPP requirements applicable to the Project, including but not limited to:

6.2.3.1. At least forty eight (48) hours prior to a forecasted rain event, implementing the Rain Event Action Plan (REAP) for any rain event requiring implementation of the REAP, including any erosion and sediment control measures needed to protect all exposed portions of the site; and

6.2.3.2. Monitoring any Numeric Action Levels (NALs), if applicable.

7. As-Builts and Record Drawings

7.1. When called for by Division 1, Contractor shall submit As-Built Drawings pursuant to the Contract Documents consisting of one set of As-Built drawings in 30" x 42" color reprographic, plus one set of As Built Drawings in .pdf format provided on disc or thumb drive

7.2. Contractor shall submit Record Drawings pursuant to the Contract Documents consisting of one set of computer-aided design and drafting ("CADD") files, plus one

7.2. Contractor shall submit Record Drawings pursuant to the Contract Documents consisting of one set of computer-aided design and drafting ("CADD") files, plus one set of Record Drawings in 30" x 42" color reprographic, plus one set of Record Drawings in .pdf format provided on disc or thumb drive

8. Construction Manager

The District will use a Construction Manager on the Project that is the subject of this Contract. Gilbane Building Company is the Construction Manager for this Project.

9. Program Manager

Gilbane Building Company is the Program Manager designated for the Project that is the subject of this Contract.

10. Preliminary Schedule of Values

The preliminary schedule of values shall include, at a minimum, the following information and the following structure:

Replace provision in the General Conditions with the following provisions:

10.1.1.2.3. The preliminary schedule of values shall not provide for values any greater than the following percentages of the Contract value:

10.1.1.2.3.1. Mobilization and layout combined to equal not more than **[1]**%;
10.1.1.2.3.2. Submittals, samples and shop drawings combined to equal not more than **[3]**%;
10.1.1.2.3.3. Bonds and insurance combined to equal not more than **[2]**%.

11. Construction Work Hours

Construction activities on campus shall be restricted to between the hours of 7:00 am and 7:00 pm on weekdays and Saturdays. Work on Sundays and holidays will be upon approval and acceptance of the Marin Community College District

END OF DOCUMENT

DOCUMENT 00 73 56

HAZARDOUS MATERIALS PROCEDURES & REQUIREMENTS

1. Summary

This document includes information applicable to hazardous materials and hazard waste abatement.

2. Notice of Hazardous Waste or Materials Conditions

a. Contractor shall give notice in writing to the District, the Construction Manager, and the Architect promptly, before any of the following conditions are disturbed, and in no event later than twenty-four (24) hours after first observance, of any:

(1) Material that Contractor believes may be material that is hazardous waste or hazardous material, as defined in section 25117 of the Health and Safety Code, that is required to be removed to a Class I, Class II, or Class III disposal site in accordance with provisions of existing law;

(2) Other material that may present a substantial danger to persons or property exposed thereto in connection with Work at the site.

b. Contractor's written notice shall indicate whether the hazardous waste or material was shown or indicated in the Contract Documents to be within the scope of Work, and whether the materials were brought to the site by Contractor, its Subcontractors, suppliers, or anyone else for whom Contractor is responsible. As used in this section the term "hazardous materials" shall include, without limitation, asbestos, lead, Polycholrinated biphenyl (PCB), petroleum and related hydrocarbons, and radioactive material.

c. In response to Contractor's written notice, the District shall investigate the identified conditions.

d. If the District determines that conditions do not involve hazardous materials or that no change in terms of Contract is justified, the District shall so notify Contractor in writing, stating reasons. If the District and Contractor cannot agree on whether conditions justify an adjustment in Contract Price or Contract Time, or on the extent of any adjustment, Contractor shall proceed with the Work as directed by the District.

e. If after receipt of notice from the District, Contractor does not agree to resume Work based on a reasonable belief it is unsafe, or does not agree to resume Work under special conditions, then District may order such portion of Work that is in connection with such hazardous condition or such affected area to be deleted from the Work, or performed by others, or District may invoke its rights to terminate the Contract in whole or in part. District will determine entitlement to or the amount or extent of an adjustment, if any, in

Contract Price or Contract Time as a result of deleting such portion of Work, or performing the Work by others.

f. If Contractor stops Work in connection with any hazardous condition and in any area affected thereby, Contractor shall immediately redeploy its workers, equipment, and materials, as necessary, to other portions of the Work to minimize delay and disruption.

3. **Additional Warranties and Representations**

a. Contractor represents and warrants that it, its employees, and its subcontractors and their employees, shall at all times have the required levels of familiarity with the Site and the Work, training, and ability to comply fully with all applicable law and contract requirements for safe and expeditious performance of the Work, including whatever training is or may be required regarding the activities to be performed (including, but not limited to, all training required to address adequately the actual or potential dangers of Contract performance).

b. Contractor represents and warrants that it, its employees, and its subcontractors and their employees, shall at all times have and maintain in good standing any and all certifications and licenses required by applicable federal, state, and other governmental and quasi-governmental requirements applicable to the Work.

c. Contractor represents and warrants that it has studied carefully all requirements of the Specifications regarding procedures for demolition, hazardous waste abatement, or safety practices, specified in the Contract, and prior to submitting its bid, has either (a) verified to its satisfaction that the specified procedures are adequate and sufficient to achieve the results intended by the Contract Documents, or (b) by way of approved "or equal" request or request for clarification and written Addenda, secured changes to the specified procedures sufficient to achieve the results intended by the Contract Documents. Contractor accepts the risk that any specified procedure will result in a completed Project in full compliance with the Contract Documents.

4. Monitoring and Testing

a. District reserves the right, in its sole discretion, to conduct air monitoring, earth monitoring, Work monitoring, and any other tests (in addition to testing required under the agreement or applicable law), to monitor Contract requirements of safe and statutorily compliant work methods and (where applicable) safe re-entry level air standards under state and federal law upon completion of the job, and compliance of the work with periodic and final inspection by public and quasi-public entities having jurisdiction.

b. Contractor acknowledges that District has the right to perform, or cause to be performed, various activities and tests including, but not limited to, pre-abatement, during abatement, and post-abatement air monitoring, that

District shall have no obligation to perform said activities and tests, and that a portion of said activities and tests may take place prior to the completion of the Work by Contractor. In the event District elects to perform these activities and tests, Contractor shall afford District ample access to the Site and all areas of the Work as may be necessary for the performance of these activities and tests. Contractor will include the potential impact of these activities or tests by District in the Contract Price and the Scheduled Completion Date.

c. Notwithstanding District's rights granted by this paragraph, Contractor may retain its own industrial hygiene consultant at Contractor's own expense and may collect samples and may perform tests including, but not limited to, pre-abatement, during abatement, and post-abatement personal air monitoring, and District reserves the right to request documentation of all such activities and tests performed by Contractor relating to the Work and Contractor shall immediately provide that documentation upon request.

5. Compliance with Laws

a. Contractor shall perform safe, expeditious, and orderly work in accordance with the best practices and the highest standards in the hazardous waste abatement, removal, and disposal industry, the applicable law, and the Contract Documents, including, but not limited to, all responsibilities relating to the preparation and return of waste shipment records, all requirements of the law, delivering of all requisite notices, and obtaining all necessary governmental and quasi-governmental approvals.

b. Contractor represents that it is familiar with and shall comply with all laws applicable to the Work or completed Work including, but not limited to, all federal, state, and local laws, statutes, standards, rules, regulations, and ordinances applicable to the Work relating to:

(1) The protection of the public health, welfare and environment;

(2) Storage, handling, or use of asbestos, PCB, lead, petroleum based products or other hazardous materials;

(3) The generation, processing, treatment, storage, transport, disposal, destruction, or other management of asbestos, PCB, lead, petroleum, or hazardous waste materials or other waste materials of any kind; and

(4) The protection of environmentally sensitive areas such as wetlands and coastal areas.

6. **Disposal**

a. Contractor has the sole responsibility for determining current waste storage, handling, transportation, and disposal regulations for the job Site and for each waste disposal facility. Contractor must comply fully at its sole cost and

expense with these regulations and any applicable law. District may, but is not obligated to, require submittals with this information for it to review consistent with the Contract Documents.

b. Contractor shall develop and implement a system acceptable to District to track hazardous waste from the Site to disposal, including appropriate "Hazardous Waste Manifests" on the EPA form, so that District may track the volume of waste it put in each landfill and receive from each landfill a certificate of receipt.

c. Contractor shall provide District with the name and address of each waste disposal facility prior to any disposal, and District shall have the express right to reject any proposed disposal facility. Contractor shall not use any disposal facility to which District has objected. Contractor shall document actual disposal or destruction of waste at a designated facility by completing a disposal certificate or certificate of destruction forwarding the original to the District.

7. Permits

a. Before performing any of the Work, and at such other times as may be required by applicable law, Contractor shall deliver all requisite notices and obtain the approval of all governmental and quasi-governmental authorities having jurisdiction over the Work. Contractor shall submit evidence satisfactory to District that it and any disposal facility

(1) have obtained all required permits, approvals, and the like in a timely manner both prior to commencement of the Work and thereafter as and when required by applicable law, and

(2) are in compliance with all such permits, approvals and the regulations.

For example, before commencing any work in connection with the Work involving asbestos-containing materials, or PCBs, or other hazardous materials subject to regulation, Contractor agrees to provide the required notice of intent to renovate or demolish to the appropriate state or federal agency having jurisdiction, by certified mail, return receipt requested, or by some other method of transmittal for which a return receipt is obtained, and to send a copy of that notice to District. Contractor shall not conduct any Work involving asbestos-containing materials or PCBs unless Contractor has first confirmed that the appropriate agency having jurisdiction is in receipt of the required notification. All permits, licenses, and bonds that are required by governmental or quasi-governmental authorities, and all fees, deposits, tap fees, offsite easements, and asbestos and PCB disposal facilities expenses necessary for the prosecution of the Work, shall be procured and paid for by Contractor. Contractor shall give all notices and comply with the all applicable laws bearing on the conduct of the Work as drawn and specified. If Contractor observes or reasonably should have observed that Plans and Specifications and other Contract Documents are at variance therewith, it shall be responsible for promptly notifying District in writing of such fact. If

Contractor performs any Work contrary to applicable laws, it shall bear all costs arising therefrom.

b. In the case of any permits or notices held in District's name or of necessity to be made in District's name, District shall cooperate with Contractor in securing the permit or giving the notice, but the Contractor shall prepare for District review and execution upon approval, all necessary applications, notices, and other materials.

8. Indemnification

To the extent permitted by law, the indemnities and limitations of liability expressed throughout the Contract Documents apply with equal force and effect to any claims or liabilities imposed or existing by virtue of the removal, abatement, and disposal of hazardous waste. This includes, but is not limited to, liabilities connected to the selection and use of a waste disposal facility, a waste transporter, personal injury, property damage, loss of use of property, damage to the environment or natural resources, or "disposal" and "release" of materials associated with the Work (as defined in 42 U.S.C. § 960l et seq.).

9. Termination

District shall have an absolute right to terminate for default immediately without notice and without an opportunity to cure should Contractor knowingly or recklessly commit a material breach of the terms of the Contract Documents, or any applicable law, on any matter involving the exposure of persons or property to hazardous waste. However, if the breach of contract exposing persons or property to hazardous waste is due solely to an ordinary, unintentional, and non-reckless failure to exercise reasonable care, then the procedures for termination for cause shall apply without modification.

END OF DOCUMENT

DOCUMENT 00 91 00

PREVAILING WAGE AND
RELATED LABOR REQUIREMENTS CERTIFICATION

PROJECT/CONTRACT NO.: **I21-35617 – ORGANIC FARM CLASSROOMS** between Marin Community College District ("District") and _____ ("Contractor" or "Bidder") ("Contract" or "Project").

I hereby certify that I will conform to the State of California Public Works Contract requirements regarding prevailing wages, benefits, on-site audits with 48-hours notice, payroll records, and apprentice and trainee employment requirements, for all Work on the above Project including, without limitation, labor compliance monitoring and enforcement by the Department of Industrial Relations.

Date: _____

Proper Name of Contractor: _____

Signature: _____

Print Name: _____

Title: _____

END OF DOCUMENT

DOCUMENT 01 11 00

SUMMARY OF WORK

PART 1 - GENERAL

1.01 RELATED DOCUMENTS AND PROVISIONS:

All Contract Documents should be reviewed for applicable provisions related to the provisions in this document, including without limitation:

A. General Conditions, including, without limitation, Site Access Conditions and Requirements;

B. Special Conditions.

1.02 SUMMARY OF WORK COVERED BY CONTRACT DOCUMENTS

A. The Work of this Contract may consist of the following:

- Site Contractor shall be responsible for all work indicated in Increment I.
  - i. Increment I: Site improvements including utilities, hardscape, landscape, shade structures, access from parking lot
  - ii. Building 24 is DSA# 109778; access only. Building 24 is a barn and considered a non-building structure. No work to interior of building; limited work to exterior of building including access, lighting, and painting.
  - iii. Building 25 and 26, DSA# 109778, to be salvaged to owner
- Site Contractor has limited work for Increment II; Including Fire Alarm and building foundations for modular buildings. Marin Community College District holds the contract for modular construction.
  - i. Increment II: Three Modular Buildings. Two modular buildings house two classrooms each. One modular building provides offices and restrooms. Fire alarm and signage for buildings, exterior drinking fountain barrier.

1.03 CONTRACTS

A. Perform the Work under a single, fixed-price Contract.

1.04 WORK BY OTHERS

A. Work on the Project that will be performed and completed prior to the start of the Work of this Contract:

None.

B. Work on the Project that will be performed by others concurrent with the Work of this Contract:

(1) On or around May 28, 2018, American Modular Systems will commence installing the modular buildings. This contractor shall coordinate with the modular building installation contractor to allow access to the site as necessary to install the modular buildings. The installation and fit-up of the modular buildings is estimated to take 2 weeks.

(2) On or around July 2nd, 2018, the district will commence installation of owner installed equipment in the demonstration kitchen. By this time, all necessary utility connections to the modular buildings shall be completed, tested, and commissioned.

1.05 CODES, REGULATIONS, AND STANDARDS

A. The codes, regulations, and standards adopted by the state and federal agencies having jurisdiction shall govern minimum requirements for this project. Where codes, regulations, and standards conflict with the Contract Documents, these conflicts shall be brought to the immediate attention of the District and the Architect.

B. Codes, regulations, and standards shall be as published effective as of date of bid opening, unless otherwise specified or indicated.

1.06 PROJECT RECORD DOCUMENTS:

A. Contractor shall maintain on Site one set of the following record documents; Contractor shall record actual revisions to the Work:

(1) Contract Drawings.

(2) Specifications.

(3) Addenda.

(4) Change Orders and other modifications to the Contract.

(5) Reviewed shop drawings, product data, and samples.

(6) Field test records.

(7) Inspection certificates.

(8) Manufacturer's certificates.

B. Contractor shall store Record Documents separate from documents used for construction. Provide files, racks, and secure storage for Record Documents and samples.

C. Contractor shall record information concurrent with construction progress.

D. Specifications: Contractor shall legibly mark and record at each product section of the Specifications the description of the actual product(s) installed, including the following:

(1) Manufacturer's name and product model and number.

(2) Product substitutions or alternates utilized.

(3) Changes made by Addenda and Change Orders and written directives.

1.07 EXAMINATION OF EXISTING CONDITIONS

A. Contractor shall be held to have examined the Project Site and acquainted itself with the conditions of the Site or of the streets or roads approaching the Site.

B. Prior to commencement of Work, Contractor shall survey the Site and existing buildings and improvements to observe existing damage and defects such as cracks, sags, broken, missing or damaged glazing, other building elements and Site improvements, and other damage.

C. Should Contractor observe cracks, sags, and other damage to and defects of the Site and adjacent buildings, paving, and other items not indicated in the Contract Documents, Contractor shall immediately report same to the District and the Architect.

1.08 CONTRACTOR'S USE OF PREMISES

A. If unoccupied and only with District’s prior written approval, Contractor may use the building(s) at the Project Site without limitation for its operations, storage, and office facilities for the performance of the Work. If the District chooses to beneficially occupy any building(s), Contractor must obtain the District's written approval for Contractor's use of spaces and types of operations to be performed within the building(s) while so occupied. Contractor's access to the building(s) shall be limited to the areas indicated.

B. If the space at the Project Site is not sufficient for Contractor's operations, storage, office facilities and/or parking, Contractor shall arrange and pay for any additional facilities needed by Contractor.

C. Contractor shall not interfere with use of or access to occupied portions of the building(s) or adjacent property.

D. Contractor shall maintain corridors, stairs, halls, and other exit-ways of building clear and free of debris and obstructions at all times.

E. No one other than those directly involved in the demolition and construction, or specifically designated by the District or the Architect shall be permitted in the areas of work during demolition and construction activities.

F. The Contractor shall install the construction security fence and maintain that it will be locked when not in use. Keys to this fencing will be provided to the District.

1.09 PROTECTION OF EXISTING STRUCTURES AND UTILITIES

A. The Drawings show above-grade and below-grade structures, utility lines, and other installations that are known or believed to exist in the area of the Work. Contractor shall locate these existing installations before proceeding with excavation and other operations that could damage same; maintain them in service, where appropriate; and repair damage to them caused by the performance of the Work. Should damage occur to these existing installations, the costs of repair shall be at the Contractor's expense and made to the District's satisfaction.

B. Contractor shall be alert to the possibility of the existence of additional structures and utilities. If Contractor encounters additional structures and utilities, Contractor will immediately report to the District for disposition of same as indicated in the General Conditions.

1.10 UTILITY SHUTDOWNS AND INTERRUPTIONS

A. Contractor shall give the District a minimum of three (3) days written notice in advance of any need to shut off existing utility services or to effect equipment interruptions. The District will set exact time and duration for shutdown, and will assist Contractor with shutdown. Work required to re-establish utility services shall be performed by the Contractor.

B. Contractor shall obtain District's written approval as indicated in the General Conditions in advance of deliveries of material or equipment or other activities that may conflict with District's use of the building(s) or adjacent facilities.

1.11 STRUCTURAL INTEGRITY

A. Contractor shall be responsible for and supervise each operation and work that could affect structural integrity of various building elements, both permanent and temporary.

B. Contractor shall include structural connections and fastenings as indicated or required for complete performance of the Work.

PART 2 – PRODUCTS Not Used.

PART 3 – EXECUTION Not Used.

END OF DOCUMENT

DOCUMENT 01 22 00

ALTERNATES AND UNIT PRICING

PART 1 – ALTERNATES

1.01 RELATED DOCUMENTS AND PROVISIONS:

All Contract Documents should be reviewed for applicable provisions related to the provisions in this document, including without limitation:

A. General Conditions;

B. Special Conditions;

C. Bid Form and Proposal;

D. Instruction to Bidders.

1.02 DESCRIPTION

The items of work indicated below propose modifications to, substitutions for, additions to and/or deletions from the various parts of the Work specified in other Sections of the Specifications. The acceptance or rejection of any of the alternates is strictly at the option of the District subject to District's acceptance of Contractor's stated prices contained in this Proposal.

1.03 GENERAL

Where an item is omitted, or scope of Work is decreased, all Work pertaining to the item whether specifically stated or not, shall be omitted and where an items is added or modified or where scope of Work is increased, all Work pertaining to that required to render same ready for use on the Project in accordance with intention of Drawings and Specifications shall be included in an agreed upon price amount.

1.04 BASE BID

The Base Bid includes all work required to construct the Project completely and in accordance with the Contract Documents.

1.05 ALTERNATES

NONE

The above Alternate descriptions are general in nature and for reference purposes only. The Contract Documents, including, without limitation, the Drawings and Specifications, must be referred to for the complete scope of Work.

PART 2 - UNIT PRICING

2.01 GENERAL

Contractor shall completely state all required figures based on Unit Prices listed below. Where scope of Work is decreased, all Work pertaining to the item, whether specifically stated or not, shall be omitted and where scope of Work is increased, all work pertaining to that item required to render same ready for use on the Project in accordance with intention of Drawings and Specifications shall be included in an agreed upon price amount.

2.02 UNIT PRICES

Furnish unit prices for each of the named items on a square foot, lineal foot, or per each basis, as applies. Unit prices shall include all labor, materials, services, profit, overhead, insurance, bonds, taxes, and all other incidental costs of Contractor, subcontractors, and supplier(s).

None

END OF DOCUMENT

DOCUMENT 01 25 13

PRODUCT OPTIONS AND SUBSTITUTIONS

PART 1 - GENERAL

1.01 RELATED DOCUMENTS AND PROVISIONS

All Contract Documents should be reviewed for applicable provisions related to the provisions in this document, including without limitation:

A. Instructions to Bidders;

B. General Conditions, including, without limitation, Substitutions For Specified Items;

C. Special Conditions.

1.02 SUBSTITUTIONS OF MATERIALS AND EQUIPMENT:

A. Catalog numbers and specific brands or trade names followed by the designation "or equal" are used in conjunction with material and equipment required by the Specifications to establish the standards of quality, utility, and appearance required. Substitutions which are equal in quality, utility, and appearance to those specified may be reviewed subject to the provisions of the General Conditions.

B. Wherever more than one manufacturer's product is specified, the first-named product is the basis for the design used in the work and the use of alternative-named manufacturers' products or substitutes may require modifications in that design. If such alternatives are proposed by Contractor and are approved by the District and/or the Architect, Contractor shall assume all costs required to make necessary revisions and modifications of the design resulting from the substitutions requested by the Contractor.

C. When materials and equipment are specified by first manufacturer's name and product number, second manufacturer's name and "or approved equal," supporting data for the second product, if proposed by Contractor, shall be submitted in accordance with the requirements for substitutions.

D. If the District and/or Architect, in reviewing proposed substitute materials and equipment, require revisions or corrections to be made to previously accepted Shop Drawings and supplemental supporting data to be resubmitted, Contractor shall promptly do so. If any proposed substitution is judged by the District and/or Architect to be unacceptable, the specified material or equipment shall be provided.

E. Samples may be required. Tests required by the District and/or Architect for the determination of quality and utility shall be made at the expense of Contractor, with acceptance of the test procedure first given by the District.

F. In reviewing the supporting data submitted for substitutions, the District and/or Architect will use for purposes of comparison all the characteristics of the specified material or equipment as they appear in the manufacturer's published data even though all the characteristics may not have been particularly mentioned in the Contract Documents. If more than two (2) submissions of supporting data are required, the cost of reviewing the additional supporting data shall be borne by Contractor, and the District will deduct the costs from the Contract Price.

PART 2 – PRODUCTS Not Used.

PART 3 – EXECUTION Not Used.

END OF DOCUMENT

SECTION 01 26 00

CONTRACT MODIFICATION PROCEDURES

PART 1 - GENERAL

1.1 SECTION INCLUDES

A. This section specifies administrative and procedural requirements for handling and processing contract modifications.

1.2 RELATED SECTIONS

A. Section 01 29 75: Applications and Certifications for Payment.

B. Section 01 60 00: Product Requirements for administrative procedures for handling request for substitution after award of contract.

1.3 CHANGE ORDER PROPOSAL REQUESTS

A. Owner-Initiated Proposal Requests: The Architect will issue a detailed description of proposed changes in the Work that will require adjustment to the Contract Sum or Contract Time. If necessary, the description will include supplemental or revised Drawings and Specifications.

1. Proposal requests issued by the Architect through the Program Manager are not to be considered as an instruction either to stop work in progress or to execute the proposed change.

2. Should the Owner contemplate making a change in the Work or a change in the Contract Time of Completion, the Architect will issue a “Proposal Request” through the Program Manager to the Contractor.

3. Within 10 working days of receipt of a Proposal Request, initiated by the Owner, submit a quotation of cost necessary to execute the change to the Program Manager for Owner’s review.

a. Include a list of quantities of products required and unit costs, with the total amount of purchases to be made. Where requested, furnish survey data to substantiate quantities.

b. Indicate applicable taxes, delivery charges, equipment rates and hours, and amounts of trade discounts.

c. Include labor rates with man-hours appropriate to the change.

d. Include a line item for applicable overhead and profit and/or fees.

e. Include a statement indicating the effect the proposed change in Work will have on the Contract Time.

1.4 CONSTRUCTION CHANGE DIRECTIVE

A. Construction Change Directive: The Construction Change Directive is an architect issued document to change the DSA approved documents.

B. Field Work Directive: The Field Work Directive instructs the Contractor to proceed with a change in the Work, for subsequent inclusion in a Change Order.

1. The Field Work Directive contains a complete description of the change in the Work. It also designates the method to be followed to determine change in the Contract Sum or Contract Time.

1.5 MINOR CHANGES IN WORK

A. The Architect will issue an Architect's Supplemental Instructions (ASI) authorizing minor changes in Work, not involving adjustment to the Contract Sum or Contract Time.

1.6 CHANGE ORDER PROCEDURES

A. Upon the Owner's approval of a Proposal Request, the Program Manager will issue a Change Order for signatures by the Owner and the Contractor. All Change Orders shall be submitted to DSA per Group I, Chapter 4, Part I, Title 24, CBD by the Architect unless otherwise noted. Change Orders will be submitted to the Board of Trustees for approval on a monthly basis.

B. Basis for Labor Wage Rates: The rates quoted in the Change Order Markup Format will be based upon the Labor Rate Worksheet submitted by the General Contractor within two weeks of Award of Contract. All Subcontractors must submit Labor Rate Worksheets when they first provide a quote for extra work. This Worksheet will provide the basis for any future change orders for which they perform work.

C. General Contractor Mark-ups on Changes to the Work: In the event of Changes to the Work, pursuant to Article 8 of the General Conditions, the General Contractor's mark-up for all overhead, General Conditions costs and profit, shall be as follows:

Mark-ups on General Contractor's Direct Work Only:	15%
Mark-up on Subcontractors (all tiers) Direct Work Only:	5%

The 5% mark-up on Subcontractors is based upon their costs, not the total of their costs and their mark-up. Mark-ups upon subcontractor mark-ups are not allowed. The foregoing limitation on mark-ups shall apply regardless of the number of subcontractors, of any tier, performing any portion of such Change to the work. The contractor may add the actual bond premium fee of no greater than one percent (1%) of the actual direct costs for performance of the change.

D. Subcontractor Mark-ups on Changes to the Work: In the event of Changes to the Work, pursuant to Article 8 of the General Conditions, the Subcontractor's mark-up for all overhead, General Conditions costs and profit, shall be as follows:

Mark-ups on Subcontractor's Direct Work Only:	15%
Mark-up on Lower Tier Subcontractor's Direct Work Only:	5%

The 5% mark-up on Lower Tier Subcontractors is based upon their costs, not the total of their costs and

their mark-up. Mark-ups upon subcontractor mark-ups are not allowed. The foregoing limitation on mark-ups shall apply regardless of the number of subcontractors, of any tier, performing any portion of such Change to the work.

Labor Rate Worksheet

Labor Rate Worksheet (Journeyman)

				Hourly Rate Vacation	$
A.	Trade/Classification Group:		Taxable Gross Total		$
	Hourly Rate (Base):	$			
B.	Fringe Benefits:		$		
	1. Health/Welfare		$		
	2. Pension		$		
	3. Apprenticeship		$		
	4. Other Detail		$		
	Sub-Total Fringe Benefits:			$	
C.	Total Rate of Base + Fringes =			$	

D. Labor Burdens:	% Amount		Base		$ Amount
1. F.I.C.A.	0.00%	X	$	=	$
2. S.U.I.	0.00%	X	$	=	$
3. F.U.I.	0.00%	X	$	=	$
4. Workmen's Comp	0.00%	X	$	=	$
5. Liability	0.00%	X	$	=	$

E. Total Hourly Rate with Fringe Benefits and Burden: $

Total $

Change Order Markup Format

Description of change:_____

	Subcontractor's Costs	
A.	Subcontractor Materials (include itemized quantity and unit costs plus sales tax)	$_____
B.	Subcontractor Labor (include itemized hours, trades/classification, and rates)	$_____
C.	Subcontractor Equipment Rentals (include invoices or standardized rate charges for contractor-owned equipment)	$_____
D.	Sub-Total Subcontractor	$_____
E.	Subcontractor markup on Subcontractor costs (15% of Line D)	$_____
F.	Subcontractor Total (Line D + Line E)	$_____
	General Contractor's Costs	
G.	GC Materials (include itemized quantity and unit costs plus sales tax)	$_____
H.	GC Labor (Include itemized hours, trades and rates)	$_____
I.	GC Equipment Rentals (Include invoices or standardized rate charges for contractor-owned equipment)	$_____
J.	Sub-Total General Contractor	$_____
K.	General Contractor's markup on GC work (15% of Line J)	$_____
L.	General Contractor Total (Line J + Line K)	$_____
	General Contractor Markup on Subcontractors and Bond Fees	
M.	Costs of all Subcontractors (attach separate sheets for multiple Subcontractors performing any portion of this change and add up all line D's)	$_____
N.	General Contractor's Mark-up rate on Subcontractors' work (5% of Line M)	$_____
O.	Sub-Total (All Line F's + Line L + Line N)	$_____
P.	All Direct Costs (all Line D's + Line J)	$_____
Q.	Mark-Up for Bond Fees (1% of Line P)	$_____
	TOTAL CHANGE PROPOSAL (Line O + Line Q)	**$_____**

PART 2- PRODUCTS (NOT USED)

PART 3- EXECUTION (NOT USED)

END OF SECTION

DOCUMENT 01 31 19

PROJECT MEETINGS

PART I – GENERAL

1.01 RELATED DOCUMENTS AND PROVISIONS:

All Contract Documents should be reviewed for applicable provisions related to the provisions in this document, including without limitation:

A. General Conditions;

B. Special Conditions;

C. Summary of Work; and

D. Submittals.

1.02 SECTION INCLUDES:

A. Scheduling of Work under this Contract shall be performed by Contractor in accordance with requirements of this Section.

(1) Development of schedule, cost and resource loading of the schedule, monthly payment requests, and project status reporting requirements of the Contract shall employ computerized Critical Path Method ("CPM") scheduling ("CPM Schedule").

(2) CPM Schedule shall be cost loaded based on Schedule of Values as approved by District.

(3) Submit schedules and reports as specified in the General Conditions.

B. Upon Notice of Award, Contractor shall immediately commence development of Initial and Original CPM Schedules to ensure compliance with CPM Schedule submittal requirements.

1.03 CONSTRUCTION SCHEDULE:

A. Within ten (10) days of the Notice of Award and before request for first progress payment, the Contractor shall prepare and submit to the Project Manager a construction progress schedule conforming to the Milestone Schedule below.

B. The Construction Schedule shall be continuously updated, and an updated schedule shall be submitted with each application for progress payment. Each revised schedule shall indicate the work actually accomplished during the previous period and the schedule for completion of the remaining work.

C. Milestone Schedule:

ACTIVITY DESCRIPTION	REQUIRED COMPLETION
Notice To Proceed Issued	**March 26, 2018**
Final Steel Shop Drawings Reviewed and Approved	**May 4, 2018**
Foundations Ready for Installation of Modular Buildings	**May 28, 2018**
Modular Buildings Ready for Installation of Owner Installed Equipment	**July 2, 2018**
Owner Occupancy of Modular Buildings	**July 16, 2018**
Substantial Completion	**July 20, 2018**
Completion of Contract	**August 3, 2018**

1.04 QUALIFICATIONS

A. Contractor shall employ experienced scheduling personnel qualified to use the latest version of **Primavera Project Planner.** Experience level required is set forth below. Contractor may employ such personnel directly or may employ a consultant for this purpose.

(1) The written statement shall identify the individual who will perform CPM scheduling.

(2) Capability and experience shall be verified by description of construction projects on which individual has successfully applied computerized CPM.

(3) Required level of experience shall include at least two (2) projects of similar nature and scope with value not less than three-fourths (¾) of the Total Bid Price of this Project. The written statement shall provide contact persons for referenced projects with current telephone and address information.

B. District reserves the right to approve or reject Contractor's scheduler or consultant at any time. District reserves the right to refuse replacing Contractor's scheduler or consultant, if District believes replacement will negatively affect the scheduling of Work under this Contract.

1.05 GENERAL

A. Progress Schedule shall be based on and incorporate milestone and completion dates specified in Contract Documents.

B. Overall time of completion and time of completion for each milestone shown on Progress Schedule shall adhere to times in the Contract, unless an earlier (advanced) time of completion is requested by Contractor and agreed to by District. Any such agreement shall be formalized by a Change Order.

(1) District is not required to accept an early completion schedule, i.e., one that shows earlier completion date than the Contract Time.

(2) Contractor shall not be entitled to extra compensation in event agreement is reached on an early completion schedule and Contractor completes its Work, for whatever reason, beyond completion date shown in its early completion schedule but within the Contract Time.

(3) A schedule showing the work completed in less than the Contract Time, and that has been accepted by District, shall be considered to have Project Float. The Project Float is the time between the scheduled completion of the work and the Completion Date. Project Float is a resource available to both District and the Contractor.

C. Ownership Project Float: Neither the District nor Contractor owns Project Float. The Project owns the Project Float. As such, liability for delay of the Completion Date rests with the party whose actions, last in time, actually cause delay to the Completion Date.

(1) For example, if Party A uses some, but not all of the Project Float and Party B later uses remainder of the Project Float as well as additional time beyond the Project Float, Party B shall be liable for the time that represents a delay to the Completion Date.

(2) Party A would not be responsible for the time since it did not consume the entire Project Float and additional Project Float remained; therefore, the Completion Date was unaffected by Party A.

D. Progress Schedule shall be the basis for evaluating job progress, payment requests, and time extension requests. Responsibility for developing Contract CPM Schedule and monitoring actual progress as compared to Progress Schedule rests with Contractor.

E. Failure of Progress Schedule to include any element of the Work, or any inaccuracy in Progress Schedule, will not relieve Contractor from responsibility for accomplishing the Work in accordance with the Contract. District's acceptance of schedule shall be for its use in monitoring and evaluating job progress, payment requests, and time extension requests and shall not, in any manner, impose a duty of care upon District, or act to relieve Contractor of its responsibility for means and methods of construction.

F. Software: Use **District Project Planner for Windows, latest version.** Such software shall be compatible with Windows operating system. Contractor shall transmit contract file to District on compact disk at times requested by District.

G. Transmit each item under the form approved by District.

(1) Identify Project with District Contract number and name of Contractor.

(2) Provide space for Contractor's approval stamp and District's review stamps.

(3) Submittals received from sources other than Contractor will be returned to the Contractor without District's review.

1.06 INITIAL CPM SCHEDULE

A Initial CPM Schedule submitted for review at the pre-construction conference shall serve as Contractor's schedule for up to ninety (90) calendar days after the Notice to Proceed.

B. Indicate detailed plan for the Work to be completed in first ninety (90) days of the Contract; details of planned mobilization of plant and equipment; sequence of early operations; procurement of materials and equipment. Show Work beyond ninety (90) calendar days in summary form.

C. Initial CPM Schedule shall be time-scaled.

D. Initial CPM Schedule shall be cost and resource loaded. Accepted cost and resource loaded schedule will be used as basis for monthly progress payments until acceptance of the Original CPM Schedule. Use of Initial CPM Schedule for progress payments shall not exceed ninety (90) calendar days.

E. District and Contractor shall meet to review and discuss the Initial CPM Schedule within seven (7) calendar days after it has been submitted to District.

(1) District's review and comment on the schedule shall be limited to Contract conformance (with sequencing, coordination, and milestone requirements).

(2) Contractor shall make corrections to schedule necessary to comply with Contract requirements and shall adjust schedule to incorporate any missing information requested by District. Contractor shall resubmit Initial CPM Schedule if requested by District.

F. If, during the first ninety (90) days after Notice to Proceed, the Contractor is of the opinion that any of the Work included on its Initial CPM Schedule has been impacted, the Contractor shall submit to District a written Time Impact Evaluation ("TIE") in accordance with Article 1.12 of this Section. The TIE shall be based on the most current update of the Initial CPM Schedule.

1.07 ORIGINAL CPM SCHEDULE

A. Submit a detailed proposed Original CPM Schedule presenting an orderly and realistic plan for completion of the Work in conformance with requirements as specified herein.

B. Progress Schedule shall include or comply with following requirements:

(1) Time scaled, cost and resource (labor and major equipment) loaded CPM schedule.

(2) No activity on schedule shall have duration longer than fifteen (15) work days, with exception of submittal, approval, fabrication and procurement activities, unless otherwise approved by District.

(a) Activity durations shall be total number of actual work days required to perform that activity.

(3) The start and completion dates of all items of Work, their major components, and milestone completion dates, if any.

(4) District -furnished materials and equipment, if any, identified as separate activities.

(5) Activities for maintaining Project Record Documents.

(6) Dependencies (or relationships) between activities.

(7) Processing/approval of submittals and shop drawings for all material and equipment required per the Contract. Activities that are dependent on submittal acceptance or material delivery shall not be scheduled to start earlier than expected acceptance or delivery dates.

(a) Include time for submittals, re-submittals and reviews by District. Coordinate with accepted schedule for submission of Shop Drawings, samples, and other submittals.

(b) Contractor shall be responsible for all impacts resulting from re-submittal of Shop Drawings and submittals.

(8) Procurement of major equipment, through receipt and inspection at jobsite, identified as separate activity.

(a) Include time for fabrication and delivery of manufactured products for the Work.

(b) Show dependencies between procurement and construction.

(9) Activity description; what Work is to be accomplished and where.

(10) The total cost of performing each activity shall be total of labor, material, and equipment, excluding overhead and profit of Contractor. Overhead and profit of the General Contractor shall be shown as a separate activity in the schedule. Sum of cost for all activities shall equal total Contract value.

(11) Resources required (labor and major equipment) to perform each activity.

(12) Responsibility code for each activity corresponding to Contractor or Subcontractor responsible for performing the Work.

(13) Identify the activities which constitute the controlling operations or critical path. No more than twenty-five (25%) of the activities shall be critical or near critical. Near critical is defined as float in the range of one (1) to (10) days.

(14) Twenty (20) workdays for developing punch list(s), completion of punch-list items, and final clean up for the Work or any designated portion thereof. No other activities shall be scheduled during this period.

(15) Interface with the work of other contractors, District, and agencies such as, but not limited to, utility companies.

(16) Show detailed Subcontractor Work activities. In addition, furnish copies of Subcontractor schedules upon which CPM was built.

(a) Also furnish for each Subcontractor, as determined by District, submitted on Subcontractor letterhead, a statement certifying that Subcontractor concurs with Contractor's Original CPM Schedule and that Subcontractor's related schedules have been incorporated, including activity duration, cost and resource loading.

(b) Subcontractor schedules shall be independently derived and not a copy of Contractor's schedule.

(c) In addition to Contractor's schedule and resource loading, obtain from electrical, mechanical, and plumbing Subcontractors, and other Subcontractors as required by District, productivity calculations common to their trades, such as units per person day, feet of pipe per day per person, feet of wiring per day per person, and similar information.

(d) Furnish schedule for Contractor/Subcontractor CPM schedule meetings which shall be held prior to submission of Original CPM schedule to District. District shall be permitted to attend scheduled meetings as an observer.

(17) Activity durations shall be in Work days.

(18) Submit with the schedule a list of anticipated non-Work days, such as weekends and holidays. The Progress Schedule shall exclude in its Work day calendar all non-Work days on which Contractor anticipates critical Work will not be performed.

C. Original CPM Schedule Review Meeting: Contractor shall, within sixty (60) days from the Notice to Proceed date, meet with District to review the Original CPM Schedule submittal.

(1) Contractor shall have its Project Manager, Project Superintendent, Project Scheduler, and key Subcontractor representatives, as required by District, in attendance. The meeting will take place over a continuous one (1) day period.

(2) District's review will be limited to submittal's conformance to Contract requirements including, but not limited to, coordination requirements. However, review may also include:

(a) Clarifications of Contract Requirements.

(b) Directions to include activities and information missing from submittal.

(c) Requests to Contractor to clarify its schedule.

(3) Within five (5) days of the Schedule Review Meeting, Contractor shall respond in writing to all questions and comments expressed by District at the Meeting.

1.08 ADJUSTMENTS TO CPM SCHEDULE

A. Adjustments to Original CPM Schedule: Contractor shall have adjusted the Original CPM Schedule submittal to address all review comments from original CPM Schedule review meeting and resubmit network diagrams and reports for District's review.

(1) District, within ten (10) days from date that Contractor submitted the revised schedule, will either:

(a) Accept schedule and cost and resource loaded activities as submitted, or

(b) Advise Contractor in writing to review any part or parts of schedule which either do not meet Contract requirements or are unsatisfactory for District to monitor Project's progress, resources, and status or evaluate monthly payment request by Contractor.

(2) District may accept schedule with conditions that the first monthly CPM Schedule update be revised to correct deficiencies identified.

(3) When schedule is accepted, it shall be considered the "Original CPM Schedule" which will then be immediately updated to reflect the current status of the work.

(4) District reserves right to require Contractor to adjust, add to, or clarify any portion of schedule which may later be discovered to be insufficient for monitoring of Work or approval of partial payment requests. No additional compensation will be provided for such adjustments, additions, or clarifications.

B. Acceptance of Contractor's schedule by District will be based solely upon schedule's compliance with Contract requirements.

(1) By way of Contractor assigning activity durations and proposing sequence of Work, Contractor agrees to utilize sufficient and necessary management and other resources to perform work in accordance with the schedule.

(2) Upon submittal of schedule update, updated schedule shall be considered "current" CPM Schedule.

(3) Submission of Contractor's schedule to District shall not relieve Contractor of total responsibility for scheduling, sequencing, and pursuing Work to comply with requirements of Contract Documents, including adverse effects such as delays resulting from ill-timed Work.

C. Submittal of Original CPM Schedule, and subsequent schedule updates, shall be understood to be Contractor's representation that the Schedule meets requirements of Contract Documents and that Work shall be executed in sequence indicated on the schedule.

D. Contractor shall distribute Original CPM Schedule to Subcontractors for review and written acceptance, which shall be noted on Subcontractors' letterheads to Contractor and transmitted to District for the record.

1.09 MONTHLY CPM SCHEDULE UPDATE SUBMITTALS

A. Following acceptance of Contractor's Original CPM Schedule, Contractor shall monitor progress of Work and adjust schedule each month to reflect actual progress and any anticipated changes to planned activities.

(1) Each schedule update submitted shall be complete, including all information requested for the Original CPM Schedule submittal.

(2) Each update shall continue to show all Work activities including those already completed. These completed activities shall accurately reflect "as built" information by indicating when activities were actually started and completed.

B. A meeting will be held on approximately the twenty-fifth (25th) of each month to review the schedule update submittal and progress payment application.

(1) At this meeting, at a minimum, the following items will be reviewed: Percent (%) complete of each activity; Time Impact Evaluations for Change Orders and Time Extension Request; actual and anticipated activity sequence changes; actual and anticipated duration changes; and actual and anticipated Contractor delays.

(2) These meetings are considered a critical component of overall monthly schedule update submittal and Contractor shall have appropriate personnel attend. At a minimum, these meetings shall be attended by Contractor's General Superintendent and Scheduler.

(3) Contractor shall plan on the meeting taking no less than four (4) hours.

C. Within five (5) working days after monthly schedule update meeting, Contractor shall submit the updated CPM Schedule update.

D. Within five (5) work days of receipt of above noted revised submittals, District will either accept or reject monthly schedule update submittal.

(1) If accepted, percent (%) complete shown in monthly update will be basis for Application for Payment by the Contractor. The schedule update shall be submitted as part of the Contractor's Application for Payment.

(2) If rejected, update shall be corrected and resubmitted by Contractor before the Application for Payment is submitted.

E. Neither updating, changing or revising of any report, curve, schedule, or narrative submitted to District by Contractor under this Contract, nor District's review or acceptance of any such report, curve, schedule or narrative shall have the effect of amending or modifying in any way the Completion Date or milestone dates or of modifying or limiting in any way Contractor's obligations under this Contract.

1.10 SCHEDULE REVISIONS

A. Updating the Schedule to reflect actual progress shall not be considered revisions to the Schedule. Since scheduling is a dynamic process, revisions to activity durations and sequences are expected on a monthly basis.

B. To reflect revisions to the schedule, the Contractor shall provide District with a written narrative with a full description and reasons for each Work activity revised. For revisions affecting the sequence of work, the Contractor shall provide a schedule diagram which compares the original sequence to the revised sequence of work. The Contractor shall provide the written narrative and schedule diagram for revisions two (2) working days in advance of the monthly schedule update meeting.

C. Schedule revisions shall not be incorporated into any schedule update until the revisions have been reviewed by District. District may request further information and justification for schedule revisions and Contractor shall, within three (3) days, provide District with a complete written narrative response to District's request.

D. If the Contractor's revision is still not accepted by District, and the Contractor disagrees with District's position, the Contractor has seven (7) calendar days from receipt of District's letter rejecting the revision to provide a written narrative providing full justification and explanation for the revision. The Contractor's failure to respond in writing within seven (7) calendar days of District's written rejection of a schedule revision shall be contractually interpreted as acceptance of District's position, and the Contractor waives its rights to subsequently dispute or file a claim regarding District's position.

E. At District's discretion, the Contractor can be required to provide Subcontractor certifications of performance regarding proposed schedule revisions affecting said Subcontractors.

1.11 RECOVERY SCHEDULE

A. If the Schedule Update shows a completion date twenty-one (21) calendar days beyond the Contract Completion Date, or individual milestone completion dates, the Contractor shall submit to District the proposed revisions to recover the lost time within seven (7) calendar days. As part of this submittal, the Contractor shall provide a written narrative for each revision made to recapture the lost time. If the revisions include sequence changes, the Contractor shall provide a

schedule diagram comparing the original sequence to the revised sequence of work.

B. The revisions shall not be incorporated into any schedule update until the revisions have been reviewed by District.

C. If the Contractor's revisions are not accepted by District, District and the Contractor shall follow the procedures in paragraph 1.09.C, 1.09.D and 1.09.E above.

D. At District's discretion, the Contractor can be required to provide Subcontractor certifications for revisions affecting said Subcontractors.

1.12 TIME IMPACTS EVALUATION ("TIE") FOR CHANGE ORDERS, AND OTHER DELAYS

A. When Contractor is directed to proceed with changed Work, the Contractor shall prepare and submit within fourteen (14) calendar days from the Notice to Proceed a TIE which includes both a written narrative and a schedule diagram depicting how the changed Work affects other schedule activities. The schedule diagram shall show how the Contractor proposes to incorporate the changed Work in the schedule and how it impacts the current schedule-update critical path. The Contractor is also responsible for requesting time extensions based on the TIE's impact on the critical path. The diagram must be tied to the main sequence of schedule activities to enable District to evaluate the impact of changed Work to the scheduled critical path.

B. Contractor shall be required to comply with the requirements of Paragraph 1.09.A for all types of delays such as, but not limited to, Contractor/Subcontractor delays, adverse weather delays, strikes, procurement delays, fabrication delays, etc.

C. Contractor shall be responsible for all costs associated with the preparation of TIEs, and the process of incorporating them into the current schedule update. The Contractor shall provide District with four (4) copies of each TIE.

D. Once agreement has been reached on a TIE, the Contract Time will be adjusted accordingly. If agreement is not reached on a TIE, the Contract Time may be extended in an amount District allows, and the Contractor may submit a claim for additional time claimed by contractor.

1.13 TIME EXTENSIONS

A. The Contractor is responsible for requesting time extensions for time impacts that, in the opinion of the Contractor, impact the critical path of the current schedule update. Notice of time impacts shall be given in accord with the General Conditions.

B. Where an event for which District is responsible impacts the projected Completion Date, the Contractor shall provide a written mitigation plan, including a schedule diagram, which explains how (e.g., increase crew size,

overtime, etc.) the impact can be mitigated. The Contractor shall also include a detailed cost breakdown of the labor, equipment, and material the Contractor would expend to mitigate District-caused time impact. The Contractor shall submit its mitigation plan to District within fourteen (14) calendar days from the date of discovery of the impact. The Contractor is responsible for the cost to prepare the mitigation plan.

C. Failure to request time, provide TIE, or provide the required mitigation plan will result in Contractor waiving its right to a time extension and cost to mitigate the delay.

D. No time will be granted under this Contract for cumulative effect of changes.

E. District will not be obligated to consider any time extension request unless the Contractor complies with requirements of Contract Documents.

F. Failure of the Contractor to perform in accordance with the current schedule update shall not be excused by submittal of time extension requests.

G. If the Contractor does not submit a TIE within the required fourteen (14) calendar days for any issue, it is mutually agreed that the Contractor does not require a time extension for said issue.

1.14 SCHEDULE REPORTS

A. Submit four (4) copies of the following reports with the Initial CPM Schedule, the Original CPM Schedule, and each monthly update.

B. Required Reports:

(1) Two activity listing reports: one sorted by activity number and one by total Project Float. These reports shall also include each activity's early/late and actual start and finish dates, original and remaining duration, Project Float, responsibility code, and the logic relationship of activities.

(2) Cost report sorted by activity number including each activity's associated cost, percentage of Work accomplished, earned value- to-date, previous payments, and amount earned for current update period.

(3) Schedule plots presenting time-scaled network diagram showing activities and their relationships with the controlling operations or critical path clearly highlighted.

(4) Cash flow report calculated by early start, late start, and indicating actual progress. Provide an exhibit depicting this information in graphic form.

(5) Planned versus actual resource (i.e., labor) histogram calculated by early start and late start.

C. Other Reports

In addition to above reports, District may request, from month-to-month, any two of the following reports. Submit four (4) copies of all reports.

(1) Activities by early start.

(2) Activities by late start.

(3) Activities grouped by Subcontractors or selected trades.

(4) Activities with scheduled early start dates in a given time frame, such as fifteen (15) or thirty (30) day outlook.

D. Furnish District with report files on compact disks containing all schedule files for each report generated.

1.15 PROJECT STATUS REPORTING

A. In addition to submittal requirements for CPM scheduling identified in this Section, Contractor shall provide a monthly project status report (i.e., written narrative report) to be submitted in conjunction with each CPM Schedule as specified herein. Status reporting shall be in form specified below.

B. Contractor shall prepare monthly written narrative reports of status of Project for submission to District. Written status reports shall include:

(1) Status of major Project components (percent (%) complete, amount of time ahead or behind schedule) and an explanation of how Project will be brought back on schedule if delays have occurred.

(2) Progress made on critical activities indicated on CPM Schedule.

(3) Explanations for any lack of work on critical path activities planned to be performed during last month.

(4) Explanations for any schedule changes, including changes to logic or to activity durations.

(5) List of critical activities scheduled to be performed next month.

(6) Status of major material and equipment procurement.

(7) Any delays encountered during reporting period.

(8) Contractor shall provide printed report indicating actual versus planned resource loading for each trade and each activity. This report shall be provided on weekly and monthly basis.

(a) Actual resource shall be accumulated in field by Contractor, and shall be as noted on Contractor's daily reports. These reports will be basis for information provided in computer-generated monthly and weekly printed reports.

(b) Contractor shall explain all variances and mitigation measures.

(9) Contractor may include any other information pertinent to status of Project. Contractor shall include additional status information requested by District at no additional cost.

(10) Status reports, and the information contained therein, shall not be construed as claims, notice of claims, notice of delay, or requests for changes or compensation.

1.16 WEEKLY SCHEDULE REPORT

At the Weekly Progress Meeting, the Contractor shall provide and present a time-scaled three (3) week look-ahead schedule that is based and correlated by activity number to the current schedule (i.e., Initial, Original CPM, or Schedule Update).

1.17 DAILY CONSTRUCTION REPORTS

On a daily basis, Contractor shall submit a daily activity report to District for each workday, including weekends and holidays when worked. Contractor shall develop the daily construction reports on a computer-generated database capable of sorting daily Work, manpower, and manhours by Contractor, Subcontractor, area, sub-area, and Change Order Work. Upon request of District, furnish computer disk of this data base. Obtain District's written approval of daily construction report data base format prior to implementation. Include in report:

A. Project name and Project number.

B. Contractor's name and address.

C. Weather, temperature, and any unusual site conditions.

D. Brief description and location of the day's scheduled activities and any special problems and accidents, including Work of Subcontractors. Descriptions shall be referenced to CPM scheduled activities.

E. Worker quantities for its own Work force and for Subcontractors of any tier.

F. Equipment, other than hand tools, utilized by Contractor and Subcontractors.

1.18 PERIODIC VERIFIED REPORTS

Contractor shall complete and verify construction reports on a form prescribed by the Division of the State Architect and file reports on the first day of February, May, August, and November during the preceding quarter year; at the completion of the Contract; at the completion of the Work; at the suspension of Work for a period of more than one (1) month; whenever the services of Contractor or any of Contractor's Subcontractors are terminated for any reason; and at any time a special verified report is required by the Division of the State Architect. Refer to section 4-336 and section 4-343 of Part 1, Title 24 of the California Code of Regulations.

PART 2 - PRODUCTS Not Used.

PART 3 - EXECUTION Not Used.

END OF DOCUMENT

DOCUMENT 01 33 00

SUBMITTALS

PART 1 - GENERAL

1.01 RELATED DOCUMENTS AND PROVISIONS:

All Contract Documents should be reviewed for applicable provisions related to the provisions in this document, including without limitation:

A. General Conditions, including, without limitation, Contractor's Submittals and Schedules, Drawings and Specifications;

B. Special Conditions.

1.02 SECTION INCLUDES:

A. Definitions:

(1) Shop Drawings and Product Data are as indicated in the General Conditions and include, but are not limited to, fabrication, erection, layout and setting drawings, formwork and falsework drawings, manufacturers' standard drawings, descriptive literature, catalogues, brochures, performance and test data, wiring and control diagrams. In addition, there are other drawings and descriptive data pertaining to materials, equipment, piping, duct and conduit systems, and methods of construction as may be required to show that the materials, equipment or systems and all positions conform to the requirement of the Contract Documents, including, without limitation, the Drawings.

(2) "Manufactured" applies to standard units usually mass-produced; "fabricated" means specifically assembled or made out of selected materials to meet design requirements. Shop Drawings shall establish the actual detail of manufactured or fabricated items, indicated proper relation to adjoining work and amplify design details of mechanical and electrical equipment in proper relation to physical spaces in the structure.

(3) Manufacturer's Instructions: Where any item of Work is required by the Contract Documents to be furnished, installed, or performed, at a minimum, in accordance with a specified product manufacturer's instructions, the Contractor shall procure and distribute copies of these to the District, the Architect, and all other concerned parties and shall furnish, install, or perform the work, at a minimum, in accordance with those instructions.

B. Samples, Shop Drawings, Product Data, and other items as specified, in accordance with the following requirements:

(1) Contractor shall submit all Shop Drawings, Product Data, and Samples to the District, the Architect, the Project Inspector, and the Construction Manager.

(2) Contractor shall comply with all time frames herein and in the General Conditions and, in any case, shall submit required information in sufficient time to permit proper consideration and action before ordering any materials or items represented by such Shop Drawings, Product Data, and/or Samples.

(3) Contractor shall comply with all time frames herein and in the General Conditions and, in any case, shall allow sufficient time so that no delay occurs due to required lead time in ordering or delivery of any item to the Site. Contractor shall be responsible for any delay in progress of Work due to its failure to observe these requirements.

(4) Time for completion of Work shall not be extended on account of Contractor's failure to promptly submit Shop Drawings, Product Data, and/or Samples.

(5) Reference numbers on Shop Drawings shall have Architectural and/or Engineering Contract Drawings reference numbers for details, sections, and "cuts" shown on Shop Drawings. These reference numbers shall be in addition to any numbering system that Contractor chooses to use or has adopted as standard.

(6) When the magnitude or complexity of submittal material prevents a complete review within the stated time frame, Contractor shall make this submittal in increments to avoid extended delays.

(7) Contractor shall certify on submittals for review that submittals conform to Contract requirements. In event of any variance, Contractor shall specifically state in transmittal and on Shop Drawings, portions vary and require approval of a substitute. Also certify that Contractor-furnished equipment can be installed in allocated space.

(8) Unless specified otherwise, sampling, preparation of samples, and tests shall be in accordance with the latest standard of the American Society for Testing and Materials.

(9) Upon demand by Architect or District, Contractor shall submit samples of materials and/or articles for tests or examinations and consideration before Contractor incorporates same in Work. Contractor shall be solely responsible for delays due to sample(s) not being submitted in time to allow for tests. Acceptance or rejection will be expressed in writing. Work shall be equal to approved samples in every respect. Samples that are of value after testing will remain the property of Contractor.

C. Submittal Schedule:

(1) Contractor shall prepare its proposed submittal schedule that is coordinated with the its proposed construction schedule and submit both to the District within ten (10) days after the date of the Notice to Proceed. Contractor's proposed schedules shall become the Project Construction Schedule and the Project Submittal Schedule after each is approved by the District.

(2) Contractor is responsible for all lost time should the initial submittal be rejected, marked "revised and resubmit", etc.

(3) All Submittals shall be forwarded to the District by the date indicated on the approved Submittal Schedule, unless an earlier date is necessary to maintain the Construction Schedule, in which case those Submittals shall be forwarded to the District so as not to delay the Construction Schedule..

1.03 SHOP DRAWINGS:

A. Contractor shall submit one reproducible transparency and six (6) opaque reproductions. The District will review and return the reproducible copy and one (1) opaque reproduction to Contractor.

B. Before commencing installation of any Work, the Contractor shall submit and receive approval of all drawings, descriptive data, and material list(s) as required to accomplish Work.

C. Review of Shop Drawings is regarded as a service to assist Contractor and in all cases original Contract Documents shall take precedence as outlined under General Conditions.

D. No claim for extra time or payment shall be based on work shown on Shop Drawings unless the claim is (1) noted on Contractor's transmittal letter accompanying Shop Drawings and (2) Contractor has complied with all applicable provisions of the General Conditions, including, without limitation, provisions regarding changes and payment, and all required written approvals.

E. District shall not review Shop Drawings for quantities of materials or number of items supplied.

F. District's and/or Architect’s review of Shop Drawing will be general. District and/or Architect review does not relieve Contractor of responsibility for accuracy, proper fitting, construction of Work, furnishing of materials, or Work required by Contract Documents and not indicated on Shop Drawings. Shop Drawing reviewed by District and/or Architect is not to be construed as approving departures from Contract Documents.

G. Review of Shop Drawings and Schedules does not relieve Contractor from responsibility for any aspect of those Drawings or Schedules that is a violation of local, County, State, or Federal laws, rules, ordinances, or rules and regulations of commissions, boards, or other authorities or utilities having jurisdiction.

H. Before submitting Shop Drawings for review, Contractor shall check Shop Drawings of its subcontractors for accuracy, and confirm that all Work contiguous with and having bearing on other work shown on Shop Drawings is accurately drawn and in conformance with Contract Documents.

I. Submitted drawings and details must bear stamp of approval of Contractor:

(1) Stamp and signature shall clearly certify that Contractor has checked Shop Drawings for compliance with Drawings.

(2) If Contractor submits a Shop Drawing without an executed stamp of approval, or whenever it is evident (despite stamp) that Drawings have not been checked the District and/or Architect will not consider them and will return them to the Contractor for revision and resubmission. In that event, it will be deemed that Contractor has not complied with this provision and Contractor shall bear risk of all delays to same extent as if it had not submitted any Shop Drawings or details.

J. Submission of Shop Drawings (in either original submission or when resubmitted with correction) constitutes evidence that Contractor has checked all information thereon and that it accepts and is willing to perform Work as shown.

K. Contractor shall pay for cost of any changes in construction due to improper checking and coordination. Contractor shall be responsible for all additional costs, including coordination. Contractor shall be responsible for costs incurred by itself, the District, the Architect, the Project Inspector, the Construction Manager, any other Subcontractor or contractor, etc., due to improperly checked and/or coordination of submittals.

L. Shop Drawings must clearly delineate the following information:

(1) Project name and address.

(2) Architect's name and project number.

(3) Shop Drawing title, number, date, and scale.

(4) Names of Contractor, Subcontractor(s) and fabricator.

(5) Working and erection dimensions.

(6) Arrangements and sectional views.

(7) Necessary details, including complete information for making connections with other Work.

(8) Kinds of materials and finishes.

(9) Descriptive names of materials and equipment, classified item numbers, and locations at which materials or equipment are to be installed in the Work. Contractor shall use same reference identification(s) as shown on Contract Drawings.

M. Contractor shall prepare composite drawings and installation layouts when required to solve tight field conditions.

(1) Shop Drawings shall consist of dimensioned plans and elevations and must give complete information, particularly as to size and location of sleeves, inserts, attachments, openings, conduits, ducts, boxes, structural interferences, etc.

(2) Contractor shall coordinate these composite Shop Drawings and installation layouts in the field between itself and its Subcontractor(s) for proper relationship to the Work, the work of other trades, and the field conditions. The Contractor shall check and approve all submittal(s) before submitting them for final review.

1.04 PRODUCT DATA OR NON REPRODUCIBLE SUBMITTALS:

A. Contractor shall submit manufacturer's printed literature in original form. Any fading type of reproduction will not be accepted. Contract must submit a minimum of six (6) each, to the District. District shall return one (1) to the Contractor, who shall reproduce whatever additional copies it requires for distribution.

B. Contractor shall submit six (6) copies of a complete list of all major items of mechanical, plumbing, and electrical equipment and materials in accordance with the approved Submittal Schedule, except as required earlier to comply with the approved Construction Schedule. Other items specified are to be submitted prior to commencing Work. Contractor shall submit items of like kind at one time in a neat and orderly manner. Partial lists will not be acceptable.

C. Submittals shall include manufacturer's specifications, physical dimensions, and ratings of all equipment. Contractor shall furnish performance curves for all pumps and fans. Where printed literature describes items in addition to that item being submitted, submitted item shall be clearly marked on sheet and superfluous information shall be crossed out. If highlighting is used, Contractor shall mark all copies.

D. Equipment submittals shall be complete and include space requirements, weight, electrical and mechanical requirements, performance data, and supplemental information that may be requested.

1.05 SAMPLES:

A. Contractor shall submit for approval Samples as required and within the time frame in the Contract Documents. Materials such as concrete, mortar, etc., which require on-site testing will be obtained from Project Site.

B. Contractor shall submit four (4) samples except where greater or lesser number is specifically required by Contract Documents including, without limitation, the Specifications.

(1) Samples must be of sufficient size and quality to clearly illustrate functional characteristics, with integrally related parts and attachment devices.

(2) Samples must show full range of texture, color, and pattern.

C. Contractor shall make all Submittals, unless it has authorized Subcontractor(s) to submit and Contractor has notified the District in writing to this effect.

D. Samples to be shipped prepaid or hand-delivered to the District.

E. Contractor shall mark samples to show name of Project, name of Contractor submitting, Contract number and segment of Work where representative Sample will be used, all applicable Specifications Sections and documents, Contract Drawing Number and detail, and ASTM or FS reference, if applicable.

F. Contractor shall not deliver any material to Site prior to receipt of District's and/or Architect's completed written review and approval. Contractor shall furnish materials equal in every respect to approved Samples and execute Work in conformance therewith.

G. District's and/or Architect's review, acceptance, and/or approval of Sample(s) will not preclude rejections of any material upon discovery of defects in same prior to final acceptance of completed Work.

H. After a material has been approved, no change in brand or make will be permitted.

I. Contractor shall prepare its Submittal Schedule and submit Samples of materials requiring laboratory tests to specified laboratory for testing not less than ninety (90) days before such materials are required to be used in Work.

J. Samples which are rejected must be resubmitted promptly after notification of rejection and be marked "Resubmitted Sample" in addition to other information required.

K. Field Samples and Mock-Ups are to be removed by Contractor at District's direction:

(1) Size: As Specified.

(2) Furnish catalog numbers and similar data, as requested.

1.06 REVIEW AND RESUBMISSION REQUIREMENTS:

A. The District will arrange for review of Sample(s), Shop Drawing(s), Product Data, and other submittal(s) by appropriate reviewer and return to Contractor as provided below within twenty-one (21) days after receipt or within twenty-one (21) days after receipt of all related information necessary for such review, whichever is later.

B. One (1) copy of product or materials data will be returned to Contractor with the review status.

C. Samples to be incorporated into the Work will be returned to Contractor, together with a written notice designating the Sample with the appropriate review status and indicating errors discovered on review, if any. Other Samples will not be returned, but the same notice will be given with respect thereto, and that notice shall be considered a return of the Sample.

D. Contractor shall revise and resubmit any Sample(s), Shop Drawing(s), Product Data, and other submittal(s) as required by the reviewer. Such resubmittals will be reviewed and returned in the same manner as original Sample(s), Shop Drawing(s), Product Data, and other submittal(s), within fourteen (14) days after receipt thereof or within fourteen (14) days after receipt of all related information necessary for such review.

E. Contractor may proceed with any of the Work covered by Sample(s), Shop Drawing(s), Product Data, and other submittal(s) upon its return if designated as no exception taken, or revise as noted, provided the Contractor proceeds in accordance with the District and/or the Architect's notes and comments.

F. Contractor shall not begin any of the work covered by a Sample(s), Shop Drawing(s), Product Data, and other submittal(s), designated as revise and resubmit or rejected, until a revision or correction thereof has been reviewed and returned to Contractor.

G. Sample(s), Shop Drawing(s), Product Data, and other submittal(s) designated as revise and resubmit or rejected and requiring resubmittal, shall be revised or corrected and resubmitted to the District no later than fourteen (14) days or a shorter period as required to comply with the approved Construction Schedule, after its return to Contractor.

H. Neither the review nor the lack of review of any Sample(s), Shop Drawing(s), Product Data, and other submittal(s) shall waive any of the requirements of the Contract Documents, or relieve Contractor of any obligation thereunder.

I. District's and/or Architect's review of Shop Drawings does not relieve the Contractor of responsibility for any errors that may exist. Contractor is responsible for the dimensions and design of adequate connections and details and for satisfactory construction of all the Work.

PART 2 – PRODUCTS Not Used.

PART 3 - EXECUTION Not Used.

END OF DOCUMENT

DOCUMENT 01 35 13.23

SITE STANDARDS

PART 1 – GENERAL

1.01 RELATED DOCUMENTS AND PROVISIONS:

All Contract Documents should be reviewed for applicable provisions related to the provisions in this document, including without limitation:

A. General Conditions, including without limitation, Site Access, Conditions, and Regulations;

B. Special Conditions;

C. Drug-Free Workplace Certification;

D. Tobacco-Free Environment Certification;

E. Criminal Background Investigation/Fingerprinting Certification;

F. Temporary Facilities and Controls.

1.02 REQUIREMENTS OF THE DISTRICT:

A. Drug-Free Schools and Safety Requirements:

(1) All school sites and other District Facilities have been declared "Drug-Free Zones." No drugs, alcohol and/or smoking are allowed at any time in any buildings and/or grounds on District property. No students, staff, visitors, or contractors are to use drugs on these sites.

(2) Smoking and the use of tobacco products by all persons is prohibited on or in District property. District property includes school buildings, school grounds, school owned vehicles and vehicles owned by others while on District property. Contractor shall be post: "Non-Smoking Area" in a highly visible location on Site. Contractor may designate a smoking area outside of District property within the public right-of-way, provided that this area remains quiet and unobtrusive to adjacent neighbors. This smoking area is to be kept clean at all times.

(3) Contractor shall ensure that no alcohol, firearms, weapons, or controlled substances enter or are used at the Site. Contractor shall immediately remove from the Site and terminate the employment of any employee(s) found in violation of this provision.

B. Language: Unacceptable and/or loud language will not be tolerated, "Cat calls" or other derogatory language toward students or public will not be allowed.

C. Disturbing the Peace (Noise and Lighting):

(1) Contractor shall observe the noise ordinance of the Site at all times including, without limitation, all applicable local, city, and/or state laws, ordinances, and/or regulations regarding noise and allowable noise levels.

(2) The use of radios, etc., shall be controlled to keep all sound at a level that cannot be heard beyond the immediate area of use. District reserves the right to prohibit the use of radios at the Site, except for handheld communication radios (e.g., Nextel phones or radios).

(3) If portable lights are used after dark, all light must be located so as not to direct light into neighboring property.

D. Traffic:

(1) Driving on the Premises shall be limited to periods when students and public are not present. If driving or deliveries must be made during the school hours, two (2) or more ground guides shall lead the vehicle across the area of travel. In no case shall driving take place across playgrounds or other pedestrian paths during recess, lunch, and/or class period changes. The speed limit on-the Premises shall be five (5) miles per hour (maximum) or less if conditions require.

(2) All paths of travel for deliveries, including without limitation, material, equipment, and supply deliveries, shall be reviewed and approved by District in advance. Any damage will be repaired to the pre-damaged condition by the Contractor.

(3) District shall designate a construction entry to the Site. If Contractor requests, District determines it is required, and to the extent possible, District shall designate a staging area so as not to interfere with the normal functioning of school facilities. Location of gates and fencing shall be approved in advance with District and at Contractor's expense.

(4) Parking areas shall be reviewed and approved by District in advance. No parking is to occur under the drip line of trees or in areas that could otherwise be damaged.

E. All of the above shall be observed and complied with by the Contractor and all workers on the Site. Failure to follow these directives could result in individual(s) being suspended or removed from the work force at the discretion of the District. The same rules and regulations shall apply equally to delivery personnel, inspectors, consultants, and other visitors to the Site.

PART 2 - PRODUCTS Not Used.

PART 3 - EXECUTION Not Used.

END OF DOCUMENT

DOCUMENT 01 41 00

REGULATORY REQUIREMENTS

PART 1 - GENERAL

1.01 RELATED DOCUMENTS AND PROVISIONS:

All Contract Documents should be reviewed for applicable provisions related to the provisions in this document, including without limitation:

A. General Conditions, including, without limitation, Obtaining of Permits and Licenses and Work to Comply with All Applicable Regulations;

B. Special Conditions;

C. Quality Control.

1.02 DESCRIPTION:

This section covers the general requirements for regulatory requirements pertaining to the Work and is supplementary to all other regulatory requirements mentioned or referenced elsewhere in the Contract Documents.

1.03 REQUIREMENTS OF REGULATORY AGENCIES:

A. All statutes, ordinances, laws, rules, codes, regulations, standards, and the lawful orders of all public authorities having jurisdiction of the Work, are hereby incorporated into these Contract Documents as if repeated in full herein and are intended to be included in any reference to Code or Building Code, unless otherwise specified, including, without limitation, the references in the list below. Contractor shall make available at the Site copies of all the listed documents applicable to the Work as the District and/or Architect may request, including, without limitation, applicable portions of the California Code of Regulations ("CCR").

B. This Project shall be governed by applicable regulations, including, without limitation, the State of California ‘s Administrative Regulations for the Division of the State Architect-Structural Safety (DSA/SS), Chapter 4, Part 1, Title 24, CCR, and the most current version on the date the bids are opened and as it pertains to school construction including, without limitation:

(1) Test and testing laboratory per Section 4-335 (District shall pay for the testing laboratory.)

(2) Special inspections per Section 4-333(c).

(3) Verified reports per Section 4-365 & 4-343(c).

(4) Duties of the Architect & Engineers shall be per Section 4-333(a) and 4-341.

(5) Duties of the Contractor shall be per Section 4-343.

(6) Addenda and Change Orders per Section 4-338.

Contractor shall keep and make available a copy of Part 1 and 2 of the most current version of Title 24 at the Site during construction.

C. Items of deferred approval shall be clearly marked on the first sheet of the Architect's and/or Engineer's approved Drawings. All items later submitted for approval shall be per Title 24 requirements to the DSA.

(1) Building Standards Administrative Code, Part 1, Title 24, CCR

(2) California Building Code (CBC), Part 2, Title 24, CCR; (Uniform Building code volumes 1-3 and California Amendments).

(3) California Electrical Code (CEC), Part 3, Title 24, CCR; (National Electrical Code and California Amendments).

(4) California Mechanical Code (CMC), Part 4, Title 24, CCR; (Uniform Mechanical Code and California Amendments).

(5) California Plumbing Code (CPC), Part 5, Title 24, CCR; (Uniform Plumbing Code and California Amendments).

(6) California Fire Code (CFC), Part 9, Title 24, CCR; (Fire Plumbing Code and California Amendments).

(7) California Referenced Standards Code, Part 12, Title 24, CCR.

(8) State Fire Marshal Regulations, Public Safety, Title 19, CCR.

(9) Partial List of Applicable NFPA Standards:

(a) NFPA 13 - Automatic Sprinkler System.

(b) NFPA 14 - Standpipes Systems.

(c) NFPA 17A - Wet Chemical System

(d) NFPA 24 - Private Fire Mains.

(e) (California Amended) NFPA 72 - National Fire Alarm Codes.

(f) NFPA 253 - Critical Radiant Flux of Floor Covering System.

(g) NFPA 2001 - Clean Agent Fire Extinguishing Systems.

(10) California Division of the State Architect interpretation of Regulations.

PART 2 – PRODUCTS Not Used.

PART 3 – EXECUTION Not Used.

END OF DOCUMENT

DOCUMENT 01 42 13

ABBREVIATIONS AND ACRONYMS

PART 1 – GENERAL

1.01 RELATED DOCUMENTS AND PROVISIONS:

All Contract Documents should be reviewed for applicable provisions related to the provisions in this document, including without limitation:

A. General Conditions including without limitation, Definitions;

B. Special Conditions.

1.02 DOCUMENT INCLUDES:

A. Abbreviations used throughout the Contract Documents.

B. Reference to a technical society, organization, or body is by abbreviation, as follows:

1.	AA	Aluminum Association
2.	AAMA	Architectural Aluminum Manufacturers Association
3.	AASHTO	American Association of State Highway and Transportation Officials
4.	ABPA	Acoustical and Board Products Association
5.	ACI	American Concrete Institute
6.	AGA	American Gas Association
7.	AGC	Associated General Contractors
8.	AHC	Architectural Hardware Consultant
9.	AI	Asphalt Institute
10.	AIA	American Institute of Architects
11.	AIEE	American Institute of Electrical Engineers
12.	AISC	American Institute of Steel Construction
13.	AISI	American Iron and Steel Institute
14.	AMCA	Air Moving and Conditioning Association
15.	ANSI	American National Standards Institute
16.	APA	American Plywood Association
17.	ARI	Air Conditioning and Refrigeration Institute
18.	ASHRAE	American Society of Heating, Refrigeration and Air Conditioning Engineers
19.	ASME	American Society of Mechanical Engineers
20.	ASSE	American Society of Structural Engineers
21.	ASTM	American Society of Testing and Materials
22.	AWPB	American Wood Preservers Bureau
23.	AWPI	American Wood preservers Institute
24.	AWS	American Welding Society
25.	AWSC	American Welding Society Code

26.	AWI	Architectural Woodwork Institute
27.	AWWA	American Water Works Association
28.	BIA	Brick Institute of America
29.	CCR	California Code of Regulations
30.	CLFMI	Chain Link Fence Manufacturers Institute
31.	CMG	California Masonry Guild
32.	CRA	California Redwood Association
33.	CRSI	Concrete Reinforcing Steel Institute
34.	CS	Commercial Standards
35.	CSI	Construction Specifications Institute
36.	CTI	Cooling Tower Institute
37.	FGMA	Flat Glass Manufacturer's Association
38.	FIA	Factory Insurance Association
39.	FM	Factory Mutual
40.	FS	Federal Specification
41.	FTI	Facing Title Institute
42.	GA	Gypsum Association
43.	ICC	International Code Council
44.	IEEE	Institute of Electrical and Electronic Engineers
45.	IES	Illumination Engineering Society
46.	LIA	Lead Industries Association
47.	MIA	Marble Institute of America
48.	MLMA	Metal Lath Manufacturers Association
49.	MS	Military Specifications
50.	NAAMM	National Association of Architectural Metal Manufacturers
51.	NBHA	National Builders Hardware Association
52.	NBFU	National Board of Fire Underwriters
53.	NBS	National Bureau of Standards
54.	NCMA	National Concrete Masonry Association
55.	NEC	National Electrical Code
56.	NEMA	National Electrical Manufacturers Association
57.	NFPA	National Fire Protection Association/National Forest Products Association
58.	NMWIA	National Mineral Wool Insulation Association
59.	NTMA	National Terrazzo and Mosaic Association
60.	NWMA	National Woodwork Manufacturer's Association
61.	ORS	Office of Regulatory Services (California)
62.	OSHA	Occupational Safety and Health Act
63.	PCI	Precast Concrete Institute
64.	PCA	Portland Cement Association
65.	PDCA	Painting and Decorating Contractors of America
66.	PDI	Plumbing Drainage Institute
67.	PEI	Porcelain Enamel Institute
68.	PG&E	Pacific Gas & Electric Company
69.	PS	Product Standards
70.	SDI	Steel Door Institute; Steel Deck Institute
71.	SJI	Steel Joist Institute
72.	SSPC	Steel Structures Painting Council
73.	TCA	Tile Council of America

74.	TPI	Truss Plate Institute
75.	UBC	Uniform Building Code
76.	UL	Underwriters Laboratories Code
77.	UMC	Uniform Mechanical Code
78.	USDA	United States Department of Agriculture
79.	VI	Vermiculite Institute
80.	WCLA	West Coast Lumberman's Association
81	WCLB	West Coast Lumber Bureau
82.	WEUSER	Western Electric Utilities Service Engineering Requirements
83.	WIC	Woodwork Institute of California
84.	WPOA	Western Plumbing Officials Association

PART 2 - PRODUCTS Not Used.

PART 3 - EXECUTION Not Used.

END OF DOCUMENT

DOCUMENT 01 42 16

DEFINITIONS

PART 1 - GENERAL

1.01 RELATED DOCUMENTS AND PROVISION

All Contract Documents should be reviewed for applicable provisions related to the provisions in this document, including without limitation:

A. General Conditions including without limitation, Definitions;

B. Special Conditions.

1.02 QUALITY ASSURANCE:

A. For products or workmanship specified by association, trade, or Federal Standards, Contractor shall comply with requirements of the standard, except when more rigid requirements are specified in the Contract Documents, or are required by applicable codes.

B. Contractor shall conform to current reference standard publication date in effect on the date of bid opening.

C. Contractor shall obtain copies of standards unless specifically required not to by the Contract Documents.

D. Contractor shall maintain a copy of all standards at jobsite during submittals, planning, and progress of the specific Work, until final completion, unless specifically required not to by the Contract Documents.

E. Should specified reference standards conflict with Contract Documents, Contractor shall request clarification from the District and./or the Architect before proceeding.

F. The contractual relationship of the parties to the Contract shall not be altered from the contractual relationship as indicated in the Contract Documents by mention or inference otherwise in any referenced document.

G. Governing Codes shall be as shown in the Contract Documents including, without limitation, the Specifications.

END OF DOCUMENT

DOCUMENT 01 42 19

REFERENCES

PART 1 - GENERAL

1.01 SCHEDULE OF REFERENCES:

The following information is intended only for the general assistance of the Contractor, and the District does not represent that all of the information is current. It is the Contractor's responsibility to verify the correct information for each of the entities listed.

AA	Aluminum Association 1525 Wilson Blvd., Suite 600 Arlington, VA 22209 www.aluminum.org	703/358-2960
AABC	Associated Air Balance Council 1518 K Street, NW, Suite 503 Washington, DC 20005 www.aabchq.com	202/737-0202
AAMA	American Architectural Manufacturers Association 1827 Walden Office Sq., Suite 550 Schaumburg, IL 60173-4268 www.aamanet.org	847/303-5664
AASHTO	American Association of State Highway and Transportation Officials 444 N Capitol St. NW - Suite 249 Washington, DC 20001 www.transportation.org	202/624-5800
AATCC	American Association of Textile Chemists and Colorists P.O. Box 12215 One Davis Drive Research Triangle Park, NC 27709 2215 www.aatcc.org	919/549-8141
ACA	American Coatings Association 1500 Rhode Island Ave., NW Washington DC, 20005 www.paint.org	202/462-6272
ACI	American Concrete Institute 38800 Country Club Dr. Farmington Hills, MI 48331-3439 www.aci-int.org	248/848-3700
ACPA	American Concrete Pipe Association 8445 Freeport Parkway, Suite 350 Irving, TX 75063-2595	972/506-7216

	www.concrete-pipe.org	
ADC	Air Diffusion Council 1901 N. Roselle Road, Suite 800 Schaumburg, Illinois 60195 www.flexibleduct.org	847/706-6750
AF&PA	American Forest and Paper Association 1111 Nineteenth Street, NW, Suite 800 Washington, DC 20036 www.afandpa.org	202/463-2700
AGA	American Gas Association 400 North Capitol Street, NW Washington, DC 20001 www.aga.org	202/824-7000
AGC	Associate General Contractors of America 2300 Wilson Blvd., Suite 400 Arlington, VA 22201 www.agc.org	703/548-3118
AHA	American Hardboard Association 1210 West Northwest Highway Palatine, IL 60067 domensino.com/AHA/default.htm	847/934-8800
AI	Asphalt Institute 2696 Research Park Drive Lexington, KY 40511-8480 www.asphaltinstitute.org	859/288-4960
AIA	The American Institute of Architects 1735 New York Ave., NW Washington, DC 20006-5292 www.aia.org	202/626-7300
AISC	American Institute of Steel Construction One East Wacker Drive Suite 700 Chicago, IL 60601-1802 www.aisc.org	312.670.2400
AIA	American Insurance Association (formerly the National Board of Fire Underwriters) 2101 L Street, NW, Suite 400 Washington, DC 20037 www.aiadc.org	202/828-7100
AISI	American Iron and Steel Institute 25 Massachusetts Ave., NW, Suite 800 Washington, DC 20001 www.steel.org	202/452.7100
AITC	American Institute of Timber Construction	303/792.9559

	7012 S. Revere Parkway Suite 140 Centennial, CO 80112 www.aitc-glulam.org	
ALI	Associated Laboratories, Inc. P.O. Box 152837 Dallas, TX 75315 www.assoc-labs.com	214/565-0593
ALSC	American Lumber Standards Committee, Inc. P.O. Box 210 Germantown, MD 20875 www.alsc.org	301/972-1700
AMCA	Air Movement and Control Association International, Inc. 30 W. University Drive Arlington Heights, IL 60004 www.amca.org	847/394-0150
ANLA	American Nursery & Landscape Association 1200 G Street NW, Suite 800 Washington, DC 20005 www.anla.org	202/789-2900
ANSI	American National Standards Institute 1899 L Street, NW, 11th Floor Washington, DC, 20036 www.ansi.org	202/293.8020
APA	APA-The Engineered Wood Association 7011 S. 19th Street Tacoma, WA 98466-5333 www.apawood.org	253/565-6600
APA	Architectural Precast Association 6710 Winkler Road, Suite 8 Fort Myers, Florida 33919 www.archprecast.org	239/454-6989
ARI	Air Conditioning and Refrigeration Institute 4100 N. Fairfax Drive, Suite 200 Arlington, VA 22203 www.lightindustries.com/ARI	703/524-8800
ARMA	Asphalt Roofing Manufacturers Association Public Information Department 750 National Press Building 529 14th Street, NW Washington, DC 20045 www.asphaltroofing.org	202/591-2450
ASA	The Acoustical Society of America ASA Office Manager	516/576-2360

	Suite 1NO1 2 Huntington Quadrangle Melville, NY 11747-4502 http://asa.aip.org	
ASCE	American Society of Civil Engineers 1801 Alexander Bell Drive Reston, VA 20191 www.asce.org	800/548-2723 703/295-6300
ASHRAE	American Society of Heating, Refrigerating and Air Conditioning Engineers 1791 Tullie Circle, NE Atlanta, GA 30329-2305 www.ashrae.org	800/527-4723 404/636-8400
ASLA	American Society of Landscape Architects 636 Eye Street, NW Washington, DC 20001-3736 www.asla.org	202/898-2444
ASME	American Society of Mechanical Engineers Three Park Avenue New York, NY 10016-5990 www.asme.org	800/434-2763
ASPE	American Society of Plumbing Engineers 2980 S River Rd. Des Plaines, IL 60018 http://aspe.org	847/296-0002
ASQ	American Society for Quality P.O. Box 3005 Milwaukee, WI 53201-3005 or 600 North Plankinton Avenue Milwaukee, WI 53203 http://asq.org	800/248-1946 414/272-8575
ASSE	American Society of Sanitary Engineering 901 Canterbury, Suite A Westlake, Ohio 44145 www.asse-plumbing.org	440/835-3040
ASTM	ASTM International 100 Barr Harbor Drive PO Box C700 West Conshohocken, PA, 19428-2959 www.astm.org	610/832-9500
AWCI	Association of the Wall and Ceiling Industry 513 West Broad Street, Suite 210 Falls Church, VA 22046 www.awci.org	703/538-1600

AWPA	American Wood Protection Association P.O. Box 361784 Birmingham, AL 35236-1784 www.awpa.com	205/733-4077
AWPI	American Wood Preservers Institute 2750 Prosperity Ave. Suite 550 Fairfax, VA 22031-4312 www.arcat.com	800/356-AWPI 703/204-0500
AWS	American Welding Society 8669 Doral Boulevard, Suite 130 Doral, Florida 33166 www.aws.org	800/443-9353 305/443-9353
AWI	Architectural Woodwork Institute 46179 Westlake Drive, Suite 120 Potomac Falls, VA 20165-5874 www.awinet.org	571/323-3636
AWWA	American Water Works Association 6666 West Quincy Avenue Denver, CO 80235 www.awwa.org	800/926-7337 303/794 7711
BHMA	Builders Hardware Manufacturers Association 355 Lexington Avenue, 15th floor New York, NY 10017 www.buildershardware.com	212/297-2122
BIA	The Brick Industry Association 1850 Centennial Park Drive, Suite 301 Reston, VA 20191 www.gobrick.com	703/620-0010
CGA	Compressed Gas Association 14501 George Carter Way, Suite 103 Chantilly VA 20151-2923 www.cganet.com	703/788-2700
CISCA	Ceilings & Interior Systems Construction Association 1010 Jorie Blvd, Suite 30 Oak Brook, IL 60523 www.cisca.org	630/584-1919
CISPI	Cast Iron Soil Pipe Institute 1064 Delaware Avenue SE Atlanta, GA 30316 www.cispi.org	404/622-0073
CLFMI	Chain Link Fence Manufacturers Institute	410/290-6267

	10015 Old Columbia Road, Suite B-215 Columbia, MD 21046 www.associationsites.com/main-pub.cfm?usr=clfma	
CPA	Composite Panel Association 19465 Deerfield Avenue, Suite 306 Leesburg, VA 20176 www.compositepanel.org	703/724-1128
CPSC	Consumer Product Safety Commission 4330 East West Highway Bethesda, MD 20814 www.cpsc.gov	301/504-7923 800/638-2772
CRA	California Redwood Association 405 Enfrente Drive, Suite 200 Novato, CA 94949 www.calredwood.org	415/382-0662
CRI	Carpet and Rug Institute P.O. Box 2048 Dalton, Georgia 30722-2048 www.carpet-rug.org	706/278-3176
CRSI	Concrete Reinforcing Steel Institute 933 N. Plum Grove Road Schaumburg, IL 60173 4758 www.crsi.org	847/517-1200
CSI	The Construction Specifications Institute 110 South Union Street, Suite 100 Alexandria VA 22314 www.csinet.org	800/689-2900
CTIOA	Ceramic Tile Institute of America 12061 Jefferson Blvd. Culver City, CA 90230-6219 www.ctioa.org	310/574-7800
DHI	Door and Hardware Institute (formerly National Builders Hardware Association) 14150 Newbrook Dr. Chantilly, VA 20151 www.dhi.org	703/222-2010
DIPRA	Ductile Iron Pipe Research Association 2000 2nd Avenue, South Suite 429 Birmingham, AL 35233 www.dipra.org	205/402-8700
DOC	U.S. Department of Commerce 1401 Constitution Ave., NW Washington, D.C. 20230	202/482-2000

	www.commerce.gov	
DOT	U.S. Department of Transportation 1200 New Jersey Avenue, SE Washington, DC 20590 www.dot.gov	855/368-4200
EJMA	Expansion Joint Manufacturers Association, Inc. 25 North Broadway Tarrytown, NY 10591 www.ejma.org	914/332-0040
EPA	Environmental Protection Agency Ariel Rios Building 1200 Pennsylvania Avenue, N.W. Washington, DC 20460 www.epa.gov	202/272-0167
FCICA	Floor Covering Installation Contractors Association 7439 Millwood Drive West Bloomfield, MI 48322 www.fcica.com	248/661-5015 877/TO-FCICA
FM Global	Factory Mutual Insurance Company Mary Breighner Global Practice Leader Education, Public Entities, Health Care FM Global 9 Woodcrest Court Cincinnati, OH 45246 www.fmglobal.com	513/742-9516
FS	General Services Administration (GSA) Index of Federal Specifications, Standards and Commercial Item Descriptions 470 East L'Enfant Plaza, SW, Suite 8100 Washington, DC 20407 www.gsa.gov	202/619-8925
GA	The Gypsum Association 6525 Belcrest Road, Suite 480 Hyattsville, MD 20782 www.gypsum.org	301/277-8686
GANA	Glass Association of North America 800 SW Jackson St., Suite 1500 Topeka, KS 66612-1200 www.glasswebsite.com	785/271-0208
HMA	Hardwood Manufacturers Association 665 Rodi Road, Suite 305 Pittsburgh, PA 15235 http://hmamembers.org	412/244-0440

HPVA	Hardwood Plywood & Veneer Association 1825 Michael Faraday Drive Reston, Virginia 20190 www.hpva.org	703/435-2900
IAPMO	International Association of Plumbing and Mechanical Officials (formerly the Western Plumbing Officials Association) 4755 E. Philadelphia St. Ontario, CA 91761 www.iapmo.org	909/472-4100
ICC	International Code Council 500 New Jersey Avenue, NW, 6th Floor Washington, DC 20001 www.iccsafe.org	888/422-7233
IEEE	Institute of Electrical and Electronics Engineers 3 Park Avenue, 17th Floor New York, NY 10016-5997 www.ieee.org	212/419-7900
IES	Illuminating Engineering Society 120 Wall Street, Floor 17 New York, NY 10005-4001 www.ies.org	212/248-5000
ITRK	Intertek Testing Services 3933 US Route 11 Cortland, NY 13045 www.intertek.com	607/753-6711
MCAA	Mechanical Contractors Association of America 1385 Piccard Drive Rockville, MD 20850 www.mcaa.org	301/869-5800
MIA	Marble Institute of America 28901 Clemens Rd, Ste 100 Cleveland, OH 44145 www.marble-institute.com	440/250-9222
MMPA (formerly WMMPA)	Moulding & Millwork Producers Association (formerly Wood Moulding & Millwork Producers Association) 507 First Street Woodland, CA 95695 www.wmmpa.com	530/661-9591 800/550-7889

MSS	Manufacturers Standardization Society (MSS) of the Valve and Fittings Industry 127 Park Street, NE Vienna, VA 22180-4602 http://mss-hq.org	703/281-6613
NAAMM	National Association of Architectural Metal Manufacturers 800 Roosevelt Rd. Bldg. C, Suite 312 Glen Ellyn, IL 60137 www.naamm.org	630/942-6591
NAIMA	North American Insulation Manufacturers Association 44 Canal Center Plaza, Suite 310 Alexandria, VA 22314 www.naima.org	703/684-0084
NAPA	National Asphalt Pavement Association 5100 Forbes Blvd. Lanham, MD USA 20706-4407 www.asphaltpavement.org	888/468-6499 301/731-4748
NCSPA	National Corrugated Steel Pipe Association 14070 Proton Road, Suite 100 LB9 Dallas, TX 75244 www.ncspa.org	972/850-1907
NCMA	National Concrete Masonry Association 13750 Sunrise Valley Drive Herndon, VA 20171-4662 www.ncma.org	703/713-1900
NEBB	National Environmental Balancing Bureau 8575 Grovemont Circle Gaithersburg, MD 20877 www.nebb.org	301/977-3698
NECA	National Electrical Contractors Association 3 Bethesda Metro Center, Suite 1100 Bethesda, MD 20814 www.necanet.org	301/657-3110
	National Electrical Manufacturers Association 1300 North 17th Street, Suite 1752 Rosslyn, Virginia 22209 www.nema.org	703/841-3200

NEII	National Elevator Industry, Inc. 1677 County Route 64 P.O. Box 838 Salem, New York 12865-0838 www.neii.org	518/854-3100
NFPA	National Fire Protection Association 1 Batterymarch Park Quincy, Massachusetts USA 02169-7471 www.nfpa.org	617/770-3000
NHLA	National Hardwood Lumber Association PO Box 34518 Memphis, TN 38184 www.nhla.com	901/377-1818
NIA	National Insulation Association 12100 Sunset Hills Road, Suite 330 Reston, VA 20190 www.insulation.org	703/464-6422
NRCA	National Roofing Contractors Association 10255 W. Higgins Road, Suite 600 Rosemont, IL 60018-5607 www.nrca.net	847/299-9070
NSF	NSF International P.O. Box 130140 789 N. Dixboro Road Ann Arbor, MI 48113-0140, USA www.nsf.org	800/673-6275 734/769-8010
NTMA	National Terrazzo and Mosaic Association PO Box 2605 Fredericksburg, TX 78624 www.ntma.com	800/323-9736
OSHA	Occupational Safety and Health Act U.S. Department of Labor Occupational Safety & Health Administration 200 Constitution Ave., NW Washington, D.C. 20210 www.osha.gov	800/321-OSHA (6742)
PCA	Portland Cement Association 5420 Old Orchard Road Skokie, IL 60077 or 500 New Jersey Ave., N.W. 7th Floor Washington, D.C. 20001 www.cement.org	847/966-6200 202/408-9494
PCI	Precast/Prestressed Concrete Institute	312/786-0300

	200 W. Adams St. #2100 Chicago, IL 60606 www.pci.org	
PDCA	Painting and Decorating Contractors of America 2316 Millpark Drive, Ste 220 Maryland Heights, MO 63043 www.pdca.com	800/332-PDCA (7322) 314/514-7322
PDI	Plumbing & Drainage Institute 800 Turnpike Street, Suite 300 North Andover, MA 01845 http://pdionline.org	978/557-0720 800/589-8956
PEI	Porcelain Enamel Institute, Inc. P.O. Box 920220 Norcross, GA 30010 www.porcelainenamel.com	770/676-9366
PG&E	Pacific Gas & Electric Company www.pge.com	800/743-5000
PLANET	Professional Landcare Network 950 Herndon Parkway, Suite 450 Herndon, Virginia 20170 www.landcarenetwork.org	703/736-9666 800/395-2522 703/736-9668
RFCI	Resilient Floor Covering Institute 115 Broad Street, Suite 201 La Grange GA 30240 www.rfci.com	706/882-3833
RIS	Redwood Inspection Service 818 Grayson Road, Suite 201 Pleasant Hill, CA 94523 www.redwoodinspection.com	925/935-1499
SDI	Steel Deck Institute P.O. Box 25 Fox River Grove, IL 60021 www.sdi.org	847/458-4647
SDI	Steel Door Institute 30200 Detroit Road Westlake, Ohio 44145 www.steeldoor.org	440/899-0010
SJI	Steel Joist Institute 234 W. Cheves Street Florence, SC 29501 http://steeljoist.org	843/407-4091
SMA	Stucco Manufacturers Association	949/387.7611

	500 East Yale Loop Irvine, CA 92614 www.stuccomfgassoc.com	
SMACNA	Sheet Metal and Air Conditioning Contractors' National Association 4201 Lafayette Center Drive Chantilly, Virginia 20151-1219 www.smacna.org	703/803-2980
SPI	SPI: The Plastics Industry Trade Association, Inc. 1667 K St., NW, Suite 1000 Washington, DC 20006 www.plasticsindustry.org	202/974-5200
SSPC	Society for Protective Coatings (formerly the Steel Structures Painting Council) 40 24th St 6th Fl Pittsburgh, PA 15222 www.sspc.org	412/281-2331 877/281-7772
TCA	The Tile Council of North America 100 Clemson Research Blvd. Anderson, SC 29625 www.tcnatile.com	864/646-8453
TPI	Truss Plate Institute 218 North Lee Street, Suite 312 Alexandria, VA 22314 www.tpinst.org	703/683-1010
TPI	Turfgrass Producers International 2 East Main Street East Dundee, IL 60118 www.turfgrasssod.org	800/405-8873 847/649-5555
TCIA	Tree Care Industry Association (formerly the National Arborist Association) 136 Harvey Road, Suite 101 Londonderry, NH 03053 www.tcia.org	800/733-2622
TVI	The Vermiculite Institute c/o The Schundler Company 150 Whitman Avenue Edison, NJ. 08817 www.vermiculiteinstitute.org	732/287-2244
UL	Underwriters Laboratories Inc. 333 Pfingsten Road Northbrook, IL 60062-2096 www.ul.com	847/272-8800 877/854-3577
UNI	Uni-Bell PVC Pipe Association	972/243-3902

	2711 LBJ Freeway, Suite 1000 Dallas, TX 75234 www.uni-bell.org	
USDA	U.S. Department of Agriculture 1400 Independence Ave., S.W. Washington, DC 20250 www.usda.gov	202/720-2791
WA	Wallcoverings Association 401 North Michigan Avenue Suite 2200 Chicago, IL 60611 www.wallcoverings.org	312/321-5166
WCLIB	West Coast Lumber Inspection Bureau P.O. Box 23145 Portland, OR 97281 or 6980 S.W. Varns Tigard, OR 97223 www.wclib.org	503/639-0651
WCMA	Window Covering Manufacturers Association 355 Lexington Avenue 15th Floor New York, New York 10017 www.wcmanet.org	212/297-2122
WDMA	Window & Door Manufacturers Association 401 N. Michigan Avenue, Suite 2200 Chicago, IL 60611 or 2025 M Street, NW, Ste. 800 Washington, D.C. 20036-3309 www.wdma.com	312/321-6802 202/367-1157
WI	Woodwork Institute P.O. Box 980247 West Sacramento, CA 95798 www.wicnet.org	916/372-9943
WRI	Wire Reinforcement Institute 942 Main Street Hartford, CT 06103 www.wirereinforcementinstitute.org	860/240-9545
WWCA	Western Wall & Ceiling Contractors Association 1910 N. Lime St. Orange, California 92865 www.wwcca.org	714/221-5520
WWPA	Western Wood Products Association 522 SW Fifth Ave., Suite 500 Portland, OR 97204-2122	503/224-3930

	www2.wwpa.org	

PART 2 - PRODUCTS Not Used.

PART 3 - EXECUTION Not Used.

END OF DOCUMENT

DOCUMENT 01 43 00

MATERIALS AND EQUIPMENT

PART 1 - GENERAL

1.01 RELATED DOCUMENTS AND PROVISIONS

All Contract Documents should be reviewed for applicable provisions related to the provisions in this document, including without limitation:

A. General Conditions, including, without limitation, Purchase of Materials and Equipment;

B. Special Conditions;

C. Imported Materials Certification.

1.02 MATERIAL AND EQUIPMENT

A. Only items approved by the District and/or Architect shall be used.

B. Contractor shall submit lists of products and other product information in accordance with the Contract Documents, including, without limitation, the provisions regarding the submittals.

1.03 MATERIAL AND EQUIPMENT COLORS

A. The District and/or Architect will provide a schedule of colors.

B. No individual color selections will be made until after approval of all pertinent materials and equipment and after receipt of appropriate samples in accordance with the Contract Documents, including, without limitation, the provisions regarding the submittals.

C. Contractor shall request priority in writing for any item requiring advance ordering to maintain the approved Construction Schedule.

1.04 DELIVERY, STORAGE, AND HANDLING

A. Contractor shall deliver manufactured materials in original packages, containers, or bundles (with seals unbroken), bearing name or identification mark of manufacturer.

B. Contractor shall deliver fabrications in as large assemblies as practicable; where specified as shop-primed or shop-finished, package or crate as required to preserve such priming or finish intact and free from abrasion.

C. Contractor shall store materials in such a manner as necessary to properly protect them from damage. Materials or equipment damaged by handling, weather, dirt, or from any other cause will not be accepted.

D. Materials are not be acceptable that have been warehoused for long periods of time, stored or transported in improper environment, improperly packaged, inadequately labeled, poorly protected, excessively shipped, deviated from normal distribution pattern, or reassembled.

E. Contractor shall store material so as to cause no obstructions of sidewalks, roadways, and underground services. Contractor shall protect material and equipment furnished under Contract.

F. Contractor may store materials on Site with prior written approval by the District, all material shall remain under Contractor's control and Contractor shall remain liable for any damage to the materials. Should the Project Site not have storage area available, the Contractor shall provide for off-site storage at a bonded warehouse and with appropriate insurance coverage at no cost to District.

G. When any room in Project is used as a shop or storeroom, the Contractor shall be responsible for any repairs, patching, or cleaning necessary due to that use. Location of storage space shall be subject to prior written approval by District.

PART 2 - PRODUCTS

2.01 MANUFACTURERS

A. Manufacturers listed in various sections of Contract Documents are names of those manufacturers that are believed to be capable of supplying one or more of items specified therein.

B. The listing of a manufacturer does not imply that every product of that manufacturer is acceptable as meeting the requirements of the Contract Documents.

2.02 FACILITIES AND EQUIPMENT

Contractor shall provide, install, maintain, and operate a complete and adequate facility for handling, the execution, disposal, and distribution of material and equipment as required for proper and timely performance of Work connected with Contract.

2.03 MATERIAL REFERENCE STANDARDS

Where material is specified solely by reference to “standard specifications” and if requested by District, Contractor shall submit for review data on actual material proposed to be incorporated into Work of Contract listing name and address of

vendor, manufacturer, or producer, and trade or brand names of those materials, and data substantiating compliance with standard specifications.

PART 3 - EXECUTION

3.01 WORKMANSHIP

A. Where not more specifically described in any other Contract Documents, workmanship shall conform to methods and operations of best standards and accepted practices of trade or trades involved and shall include items of fabrication, construction, or installation regularly furnished or required for completion (including finish and for successful operation, as intended).

B. Work shall be executed by tradespersons skilled in their respective lines of Work. When completed, parts shall have been durably and substantially built and present a neat appearance.

3.02 COORDINATION

A. Contractor shall coordinate installation of Work so as to not interfere with installation of others. Adjustment or rework because of Contractor's failure to coordinate will be at no additional cost to District.

B. Contractor shall examine in-place work for readiness, completeness, fitness to be concealed or to receive other work, and in compliance with Contract Documents. Concealing or covering Work constitutes acceptance of additional cost which will result should in-place Work be found unsuitable for receiving other Work or otherwise deviating from the requirements of the Contract Documents.

3.03 COMPLETENESS

Contractor shall provide all portions of the Work, unless clearly stated otherwise, installed complete and operational with all elements, accessories, anchorages, utility connections, etc., in manner to assure well-balanced performance, in accordance with manufacturer's recommendations and by Contract Documents. For example, electric water coolers require water, electricity, and drain services; roof drains require drain system; sinks fit within countertop, etc. Terms such as "installed complete," "operable condition," "for use intended," "connected to all utilities," "terminate with proper cap," "adequately anchored," "patch and refinish," "to match similar," should be assumed to apply in all cases, except where completeness of functional or operable condition is specifically stated as not required.

3.04 APPROVED INSTALLER OR APPLICATOR

Installation by a manufacturer's approved installer or applicator is an understood part of Specifications and only approved installer or applicator is to provide on-site Work where specified manufacturer has on-going program of approving (i.e. certifying, bonding, re-warranting) installers or applicators. Newly established

relationships between a manufacturer and an installer or applicator who does not have other approved applicator work in progress or completed is not approved for this Project.

3.05 MANUFACTURER'S RECOMMENDATIONS

All installations shall be in accordance with manufacturer's published recommendations and specific written directions of manufacturer's representative. Should Contract Documents differ from recommendations of manufacturer or directions of his representative, Contractor shall analyze differences, make recommendations to the District and the Architect in writing, and shall not proceed until interpretation or clarification has been issued by the District and/or the Architect.

END OF DOCUMENT

DOCUMENT 01 45 00

QUALITY CONTROL

PART 1 - GENERAL

1.01 RELATED DOCUMENTS AND PROVISIONS:

All Contract Documents should be reviewed for applicable provisions related to the provisions in this document, including without limitation:

A. General Conditions, including, without limitation, Inspector, Inspections and Tests, Uncovering of Work and Non-conforming of Work and Correction of Work;

B. Special Conditions.

1.02 RELATED CODES:

A. The Work is governed by requirements of Title 24, California Code of Regulations ("CCR"), and the Contractor shall keep a copy of these available at the job Site for ready reference during construction.

B. The Division of the State Architect ("DSA") shall be notified at or before the start of construction.

1.03 OBSERVATION AND SUPERVISION:

A. The District and Architect or their appointed representatives will review the Work and the Contractor shall provide facilities and access to the Work at all times as required to facilitate this review. Administration by the Architect and any consulting Structural Engineer will be in accordance with applicable regulations, including, without limitation, CCR, Part 1, Title 24, Section 4-341.

B. One or more Project Inspector(s) approved by DSA and employed by or in contract with the District, referred to hereinafter as the "Project Inspector", will observe the work in accordance with CCR, Part 1, Title 24, Sections 4-333(b) and 4-342:

(1) The Project Inspector shall have access to the Work wherever it is in preparation or progress for ascertaining that the Work is in accordance with the Contract Documents and all applicable code sections.. The Contractor shall provide facilities and access as required and shall provide assistance for sampling or measuring materials.

(2) The Project Inspector will notify the District and Architect and call the attention of the Contractor to any observed failure of Work or material to conform to Contract Documents.

(3) The Project Inspector shall observe and monitor all testing and inspection activities required.

The Contractor shall conform with all applicable laws as indicated in the Contract Documents, including, without limitation, to CCR, Part 1, Title 24, Section 4-343. The Contractor shall supervise and direct the Work and maintain a competent superintendent on the job who is authorized to act in all matters pertaining to the Work. The Contractor's superintendent shall also inspect all materials, as they arrive, for compliance with the Contract Documents. Contractor shall reject defective Work or materials immediately upon delivery or failure of the Work or material to comply with the Contract Documents. The Contractor shall submit verified reports as indicated in the Contract Documents, including, without limitation, the Specifications and as required by Part 1, Title 24, Section 4-336.

1.04 TESTING AGENCIES:

A. Testing agencies and tests shall be in conformance with the General Documents and the requirements of Part 1, Title 24, Section 4- 335.

B. Testing and inspection in connection with earthwork shall be under the direction of the District's consulting soils engineer, if any, referred to hereinafter as the "Soils Engineer."

C. Testing and inspection of construction materials and workmanship shall be performed by a qualified laboratory, referred to hereinafter as the "Testing Laboratory." The Testing Laboratory shall be under direction of an engineer registered in the State of California, shall conform to requirements of ASTM E329, and shall be employed by or in contract with the District.

1.05 TESTS AND INSPECTIONS:

A. The Contractor shall be responsible for notifying the District and Project Inspector of all required tests and inspections. Contractor shall notify the District and Project Inspector at least seventy-two hours (72) hours in advance of performing any Work requiring testing or inspection.

B. The Contractor shall provide access to Work to be tested and furnish incidental labor, equipment, and facilities to facilitate all inspections and tests.

C. The District will pay for first inspections and tests required by the “CCR”, and other inspections or tests that the District and/or the Architect may direct to have made, including the following principal items:

(1) Tests and observations for earthwork and paving.

(2) Tests for concrete mix designs, including tests of trial batches.

(3) Tests and inspections for structural steel work.

(4) Field tests for framing lumber moisture content.

(5) Additional tests directed by the District that establish that materials and installation comply with the Contract Documents.

(6) Test and observation of welding and expansion anchors.

D. The District may at its discretion, pay and back charge the Contractor for:

(1) Retests or reinspections, if required, and tests or inspections required due to Contractor error or lack of required identifications of material.

(2) Uncovering of work in accordance with Contract Documents.

(3) Testing done on weekends, holidays, and overtime will be chargeable to the Contractor for the overtime portion.

(4) Testing done off Site.

E. Testing and inspection reports and certifications:

(1) If initially received by Contractor, Contractor shall provide to each of the following a copy of the agency or laboratory report of each test or inspection or certification.

a. The District;

b. The Construction Manager, if any;

c. The Architect;

d. The Consulting Engineer, if any;

e. Other engineers on the Project, as appropriate;

f. The Project Inspector; and

g. The Contractor.

(2) When the test or inspection is one required by the CCR, a copy of the report shall also be provided to the DSA.

PART 2 - PRODUCTS

2.01 TYPE OF TEST AND INSPECTIONS:

A. Slump Test
ASTM C 143

B. Concrete Tests

Testing agency shall test concrete used in the work per the following paragraphs:

(1) Compressive Strength:

a. Minimum number of tests required: One (1) set of three (3) cylinders for each 100 cubic yards (Sec. 2604(h) 01) of concrete or major fraction thereof, placed in one (1) day. See Title 24, Section 2605(g).

b. Two cylinders of each set shall be tested at twenty-eight (28) days. One (1) cylinder shall be held in reserve and tested only when directed by the Architect or District.

c. Concrete shall test the minimum ultimate compressive strength in 28 days, as specified on the structural drawings.

d. In the event that the twenty-eight (28) day test falls below the minimum specified strength, the effective concrete in place shall be tested by taking cores in accordance with UBC Standard No. 26-13 and tested as required for cylinders.

e. In the event that the test on core specimens falls below the minimum specified strength, the concrete will be deemed defective and shall be removed and replaced upon such direction of the Architect, and in a manner acceptable to the Division of the State Architect.

C. Reinforcing, Steel

D. Structural Steel Per Title 24 and as noted:

(1) Material: Steel per Table in Title 24, Section 2712.

(2) Qualification of Welders (UBC Std. 27-6).

(3) Shop fabrication (Section 2712(d). Structural steel only).

(4) Shop and field welding (Section 2712(e)).

E. Post Installed Anchors.

F. Compaction

(1) Subsoil

(2) Sub-base Materials

PART 3 - EXECUTION Not Used.

END OF DOCUMENT

DOCUMENT 01 50 00

TEMPORARY FACILITIES AND CONTROLS

PART 1 – GENERAL

1.01 RELATED DOCUMENTS AND PROVISIONS:

All Contract Documents should be reviewed for applicable provisions related to the provisions in this document, including without limitation:

A. General Conditions;

B. Special Conditions;

C. Site Standards.

1.02 TEMPORARY UTILITIES:

A. Electric Power and Lighting

(1) Contractor will pay for power during the course of the Work. To the extent power is available in the building(s) or on the Site, Contractor may use the District's existing utilities by making prearranged payments to the District for the utilities used by Contractor and all Subcontractors. Contractor shall be responsible for providing temporary facilities required to deliver that power service from its existing location in the building(s) or on the Site to point of intended use.

(2) Contractor shall verify characteristics of power available in building(s) or on the Site. Contractor shall take all actions required to make modifications where power of higher voltage or different phases of current are required. Contractor shall be fully responsible for providing that service and shall pay all costs required therefor.

(3) Contractor shall furnish, wire for, install, and maintain temporary electrical lights wherever it is necessary to provide illumination for the proper performance and/or observation of the Work: a minimum of 20 foot-candles for rough work and 50 foot-candles for finish work.

(4) Contractor shall be responsible for maintaining existing lighting levels in the project vicinity should temporary outages or service interruptions occur.

B. Heat and Ventilation

(1) Contractor shall provide temporary heat to maintain environmental conditions to facilitate progress of the Work, to meet specified minimum conditions for the installation and curing of materials, and to protect materials and finishes from damage due to improper temperature and humidity conditions. Portable heaters shall be standard units complete with controls.

(2) Contractor shall provide forced ventilation and dehumidification, as required, of enclosed areas for proper installation and curing of materials, to disperse humidity, and to prevent hazardous accumulations of dust, fumes, vapors, and gases.

(3) Contractor shall pay the costs of installation, maintenance, operation, and removal of temporary heat and ventilation, including costs for fuel consumed, required for the performance of the Work.

C. Water

(1) Contractor will pay for water during the course of the Work. To the extent water is then available in the building(s) or on the Site, Contractor may use the District's existing utilities by making prearranged payments to the District for the utilities used by Contractor and all Subcontractors. Contractor shall be responsible for providing temporary facilities required to deliver such utility service from its existing location in the building(s) or on the Site to point of intended use.

(2) Contractor shall use backflow preventers on water lines at point of connection to District's water supply. Backflow preventers shall comply with requirements of Uniform Plumbing Code.

(3) Contractor shall make potable water available for human consumption.

D. Sanitary Facilities

(1) Contractor shall provide sanitary temporary facilities in no fewer numbers than required by law and such additional facilities as may be directed by the Inspector for the use of all workers. The facilities shall be maintained in a sanitary condition at all times and shall be left at the Site until removal is directed by the Inspector or Contractor completes all other work at the Site.

(2) Use of toilet facilities in the Work under construction shall not be permitted except by consent of the Inspector and the District.

E. Telephone Service

(1) Contractor shall arrange with local telephone service company for telephone service for the performance of the Work. Contractor shall, at a minimum, provide in its field office one line for telephone and one line for fax machine.

(2) Contractor shall pay the costs for telephone and fax lines installation, maintenance, service, and removal.

F. Fire Protection:

(1) Contractor shall provide and maintain fire extinguishers and other equipment for fire protection. Such equipment shall be designated for use for fire protection only and shall comply with all requirements of the California Fire, State Fire Marshall and/or its designee.

(2) Where on-site welding and burning of steel is unavoidable, Contractor shall provide protection for adjacent surfaces.

G. Trash Removal:

(1) Contractor shall provide trash removal on a timely basis.

H. Temporary Facilities:

(1) **None**

1.03 CONSTRUCTION AIDS:

A. Plant and Equipment:

(1) Contractor shall furnish, operate, and maintain a complete plant for fabricating, handling, conveying, installing, and erecting materials and equipment; and for conveyances for transporting workmen. Include elevators, hoists, debris chutes, and other equipment, tools, and appliances necessary for performance of the Work.

(2) Contractor shall maintain plant and equipment in safe and efficient operating condition. Damages due to defective plant and equipment, and uses made thereof, shall be repaired by Contractor at no expense to the District.

B. None of the District's tools and equipment shall be used by Contractor for the performance of the Work.

1.04 BARRIERS AND ENCLOSURES:

A. Contractor shall obtain the District's written permission for locations and types of temporary barriers and enclosures, including fire-rated materials proposed for use, prior to their installation.

B. Contractor shall provide and maintain temporary enclosures to prevent public entry and to protect persons using other buildings and portions of the Site and/or Premises, the public, and workers. Contractor shall also protect the Work and existing facilities from the elements, and adjacent construction and improvements, persons, and trees and plants from damage and injury from demolition and construction operations.

C. Contractor shall provide site access to existing facilities for persons using other buildings and portions of the Site, the public, and for deliveries and other services and activities.

D. Tree and Plant Protection:

(1) Contractor shall preserve and protect existing trees and plants on the Premises that are not designated or required to be removed, and those adjacent to the Premises.

(2) Contractor shall provide barriers to a minimum height of 4'-0" around drip line of each tree and plant, around each group of trees and plants, as applicable, in the proximity of demolition and construction operations.

(3) Contractor shall not park trucks, store materials, perform Work or cross over landscaped areas. Contractor shall not dispose of paint thinners, water from cleaning, plastering or concrete operations, or other deleterious materials in landscaped areas, storm drain systems, or sewers. Plant materials damaged as a result of the performance of the Work shall, at the option of the District and at Contractor's expense, either be replaced with new plant materials equal in size to those damaged or by payment of an amount representing the value of the damaged materials as determined by the District.

(4) Contractor shall remove soil that has been contaminated during the performance of the Work by oil, solvents, and other materials which could be harmful to trees and plants, and replace with good soil, at Contractor's expense.

(5) Excavation Around Trees:

(a) Excavation within drip lines of trees shall be done only where absolutely necessary and with written permission from the District.

(b) Where trenching for utilities is required within drip lines, tunneling under and around roots shall be by hand digging and shall be approved by the District. Main lateral roots and

taproots shall not be cut. All roots 2 inches in diameter and larger shall be tunneled under and heavily wrapped with wet burlap so as to prevent scarring or excessive drying. Smaller roots that interfere with installation of new work may be cut with prior approval by the District. Roots must first be cut with a Vermeer, or equivalent, root cutter prior to any trenching.

(c) Where excavation for new construction is required within drip line of trees, hand excavation shall be employed to minimize damage to root system. Roots shall be relocated in backfill areas wherever possible. If encountered immediately adjacent to location of new construction, roots shall be cut approximately 6 inches back from new construction.

(d) Approved excavations shall be carefully backfilled with the excavated materials approved for backfilling. Backfill shall conform to adjacent grades without dips, sunken areas, humps, or other surface irregularities. Do not use mechanical equipment to compact backfill. Tamp carefully using hand tools, refilling and tamping until Final Acceptance as necessary to offset settlement.

(e) Exposed roots shall not be allowed to dry out before permanent backfill is placed. Temporary earth cover shall be provided, or roots shall be wrapped with four layers of wet, untreated burlap and temporarily supported and protected from damage until permanently relocated and covered with backfill.

(f) Accidentally broken roots should be sawed cleanly 3 inches behind ragged end.

1.05 SECURITY:

The Contractor shall be responsible for project security for materials, tools, equipment, supplies, and completed and partially completed Work.

1.06 TEMPORARY CONTROLS:

A. Noise Control

(1) Contractor acknowledges that adjacent facilities may remain in operation during all or a portion of the Work period, and it shall take all reasonable precautions to minimize noise as required by applicable laws and the Contract Documents.

(2) Notice of proposed noisy operations, including without limitation, operation of pneumatic demolition tools, concrete saws, and other equipment, shall be submitted to the District a minimum of forty-eight (48) hours in advance of their performance.

B. Noise and Vibration

(1) Equipment and impact tools shall have intake and exhaust mufflers.

(2) Contractor shall cooperate with District to minimize and/or cease the use of noisy and vibratory equipment if that equipment becomes objectionable by its longevity.

C. Dust and Dirt

(1) Contractor shall conduct demolition and construction operations to minimize the generation of dust and dirt, and prevent dust and dirt from interfering with the progress of the Work and from accumulating in the Work and adjacent areas including, without limitation, occupied facilities.

(2) Contractor shall periodically water exterior demolition and construction areas to minimize the generation of dust and dirt.

(3) Contractor shall ensure that all hauling equipment and trucks carrying loads of soil and debris shall have their loads sprayed with water or covered with tarpaulins, and as otherwise required by local and state ordinance.

(4) Contractor shall prevent dust and dirt from accumulating on walks, roadways, parking areas, and planting, and from washing into sewer and storm drain lines.

D. Water

Contractor shall not permit surface and subsurface water, and other liquids, to accumulate in or about the vicinity of the Premises. Should accumulation develop, Contractor shall control the water or other liquid, and suitably dispose of it by means of temporary pumps, piping, drainage lines, troughs, ditches, dams, or other methods.

E. Pollution

(1) No burning of refuse, debris, or other materials shall be permitted on or in the vicinity of the Premises.

(2) Contractor shall comply with applicable regulatory requirements and anti-pollution ordinances during the conduct of the Work including, without limitation, demolition, construction, and disposal operations.

F. Lighting

(1) If portable lights are used after dark, all light must be located so as not to direct light into neighboring property.

1.07 JOB SIGN(S):

A. General:

(1) Contractor shall provide and maintain a Project identification sign with the design, text, and colors designated by the District and/or the Architect; locate sign as approved by the District.

(2) Signs other than the specified Project sign and or signs required by law, for safety, or for egress, shall not be permitted, unless otherwise approved in advance by the District.

B. Materials:

(1) Structure and Framing: Structurally sound, new or used wood or metal; wood shall be nominal 3/4-inch exterior grade plywood.

(2) Sign Surface: Minimum 3/4-inch exterior grade plywood.

(3) Rough Hardware: Galvanized.

(4) Paint: Exterior quality, of type and colors selected by the District and/or the Architect.

C. Fabrication:

(1) Contractor shall fabricate to provide smooth, even surface for painting.

(2) Size: 4'-0" x 8'-0", unless otherwise indicated.

(3) Contractor shall paint exposed surfaces of supports, framing, and surface material with exterior grade paint: one coat of primer and one coat of finish paint.

(4) Text and Graphics: As indicated.

1.08 PUBLICITY RELEASES:

A. Contractor shall not release any information, story, photograph, plan, or drawing relating information about the Project to anyone, including press and other public communications medium, including, without limitation, on website(s).

PART 2 – PRODUCTS Not used.

PART 3 – EXECUTION Not used.

END OF DOCUMENT

DOCUMENT 01 50 13

CONSTRUCTION WASTE MANAGEMENT AND DISPOSAL

PART 1 - GENERAL

1.01 RELATED DOCUMENTS AND PROVISIONS:

All Contract Documents should be reviewed for applicable provisions related to the provisions in this document, including without limitation:

A. General Conditions;

B. Special Conditions;

C. Document 01 50 00.

1.02 SECTION INCLUDES:

A. Administrative and procedural requirements for the following:

(1) Salvaging non-hazardous construction waste.

(2) Recycling non-hazardous construction waste.

(3) Disposing of non-hazardous construction waste.

1.03 DEFINITIONS:

A. Construction Waste: Building and site improvement materials and other solid waste resulting from construction, remodeling, renovation, or repair operations. Construction waste includes packaging.

B. Demolition Waste: Building and site improvement materials resulting from demolition or selective demolition operations.

C. Disposal: Removal off-site of demolition and construction waste and subsequent sale, recycling, reuse, or deposit in landfill or incinerator acceptable to authorities having jurisdiction.

D. Recycle: Recovery of demolition or construction waste for subsequent processing in preparation for reuse.

E. Salvage: Recovery of demolition or construction waste and subsequent sale or reuse in another facility.

F. Salvage and Reuse: Recovery of demolition or construction waste and subsequent incorporation into the Work.

1.04 PERFORMANCE REQUIREMENTS:

A. General: Develop waste management plan that results in end-of Project rates for salvage/recycling of fifty percent (50%) by weight (or by volume, but not a combination) of total waste generated by the Work.

1.05 SUBMITTALS:

A. Waste Management Plan: Submit waste management plan within 30 days of date established for commencement of the Work.

B. Waste Reduction Progress Reports: Concurrent with each Application for Payment, submit copies of report. Include the following information:

(1) Material category.

(2) Generation point of waste.

(3) Total quantity of waste in tons or cubic yards.

(4) Quantity of waste salvaged, both estimated and actual in tons or cubic yards.

(5) Quantity of waste recycled, both estimated and actual in tons or cubic yards.

(6) Total quantity of waste recovered (salvaged plus recycled) in tons or cubic yards.

(7) Total quantity of waste recovered (salvaged plus recycled) as a percentage of total waste.

C. Waste Reduction Calculations: Before request for final payment, submit copies of calculated end-of-Project rates for salvage, recycling, and disposal as a percentage of total waste generated by the Work.

D. Records of Donations: Indicate receipt and acceptance of salvageable waste donated to individuals and organizations. Indicate whether organization is tax exempt.

E. Records of Sales: Indicate receipt and acceptance of salvageable waste sold to individuals and organizations. Indicate whether organization is tax exempt.

F. Recycling and Processing Facility Records: Indicate receipt and acceptance of recyclable waste by recycling and processing facilities licensed to accept them. Include manifests, weight tickets, receipts, and invoices.

G. Landfill and Incinerator Disposal Records: Indicate receipt and acceptance of waste by landfills and incinerator facilities licensed to accept them. Include manifests, weight tickets, receipts, and invoices.

H. CHPS Submittal: CHPS letter template for Credit ME2.0 and ME2.1, signed by Contractor, tabulating total waste material, quantities diverted and means by which it is diverted, and statement that requirements for the credit have been met.

I. Qualification Data: For Waste Management Coordinator.

J. Statement of Refrigerant Recovery: Signed by refrigerant recovery technician responsible for recovering refrigerant, stating that all refrigerant that was present was recovered and that recovery was performed according to EPA regulations. Include name and address of technician and date refrigerant was recovered.

K. Submittal procedures and quantities are specified in Document 01300.

1.06 QUALITY ASSURANCE:

A. Waste Management Coordinator Qualifications: LEED Accredited Professional by U.S. Green Building Council.

B. Regulatory Requirements: Comply with hauling and disposal regulations of authorities having jurisdiction.

C. Waste Management Conference: Conduct conference at Project site to comply with requirements. Review methods and procedures related to waste management including, but not limited to, the following:

(1) Review and discuss waste management plan including responsibilities of Waste Management Coordinator.

(2) Review requirements for documenting quantities of each type of waste and its disposition.

(3) Review and finalize procedures for materials separation and verify availability of containers and bins needed to avoid delays.

(4) Review procedures for periodic waste collection and transportation to recycling and disposal facilities.

(5) Review waste management requirements for each trade.

1.07 WASTE MANAGEMENT PLAN:

A. General: Develop plan consisting of waste identification, waste reduction work plan, and cost/revenue analysis. Indicate quantities by weight or volume, but use same units of measure throughout waste management plan.

B. Waste Identification: Indicate anticipated types and quantities of site-clearing and construction waste generated by the Work. Include estimated quantities and assumptions for estimates.

C. Waste Reduction Work Plan: List each type of waste and whether it will be salvaged, recycled, or disposed of in landfill or incinerator. Include points of waste generation, total quantity of each type of waste, quantity for each means of recovery, and handling and transportation procedures.

(1) Salvaged Materials for Reuse: For materials that will be salvaged and reused in this Project, describe methods for preparing salvaged materials before incorporation into the Work.

(2) Salvaged Materials for Sale: For materials that will be sold to individuals and organizations, include list of their names, addresses, and telephone numbers.

(3) Salvaged Materials for Donation: For materials that will be donated to individuals and organizations, include list of their names, addresses, and telephone numbers.

(4) Recycled Materials: Include list of local receivers and processors and type of recycled materials each will accept. Include names, addresses, and telephone numbers.

(5) Disposed Materials: Indicate how and where materials will be disposed of. Include name, address, and telephone number of each landfill and incinerator facility.

(6) Handling and Transportation Procedures: Include method that will be used for separating recyclable waste including sizes of containers, container labeling, and designated location on Project site where materials separation will be located.

PART 2 - PRODUCTS Not Used.

PART 3 - EXECUTION

3.01 PLAN IMPLEMENTATION:

A. General: Implement approved waste management plan. Provide handling, containers, storage, signage, transportation, and other items as required to implement waste management plan during the entire duration of the Contract.

(1) Comply with Document 01500 for operation, termination, and removal requirements.

B. Waste Management Coordinator: Engage a waste management coordinator to be responsible for implementing, monitoring, and reporting status of waste management work plan. Coordinator shall be present at Project site full time for duration of Project.

C. Training: Train workers, subcontractors, and suppliers on proper waste management procedures, as appropriate for the Work occurring at Project site.

(1) Distribute waste management plan to everyone concerned within 3 days of submittal return.

(2) Distribute waste management plan to entities when they first begin work on site. Review plan procedures and locations established for salvage, recycling, and disposal.

D. Site Access and Temporary Controls: Conduct waste management operations to ensure minimum interference with roads, streets, walks, walkways, and other adjacent occupied and used facilities.

(1) Designate and label specific areas of Project site necessary for separating materials that are to be salvaged, recycled, reused, donated, and sold.

(2) Comply with Document 01500 for controlling dust and dirt, environmental protection, and noise control.

3.02 RECYCLING CONSTRUCTION WASTE:

A. General: Recycle paper and beverage containers used by on-site workers.

B. Recycling Incentives: Revenues, savings, rebates, tax credits, and other incentives received for recycling waste materials shall accrue to the Contractor.

C. Procedures: Separate recyclable waste from other waste materials, trash, and debris. Separate recyclable waste by type at Project site to the maximum extent practical.

(1) Provide appropriately marked containers or bins for controlling recyclable waste until they are removed from Project Site. Include list of acceptable and unacceptable materials at each container and bin.

(a) Inspect containers and bins for contamination and remove contaminated materials if found.

(2) Stockpile processed materials on site without intermixing with other materials. Place, grade, and shape stockpiles to drain surface water. Cover to prevent windblown dust.

(3) Stockpile materials away from construction area. Do not store within drip line of remaining trees.

(4) Store components off the ground and protect from the weather.

(5) Remove recyclable waste off District property and transport to recycling receiver or processor.

D. Packaging:

(1) Cardboard and Boxes: Break down packaging into flat sheets. Bundle and store in a dry location.

(2) Polystyrene Packaging: Separate and bag material.

(3) Pallets: As much as possible, require deliveries using pallets to remove pallets from Project Site. For pallets that remain on Site, break down pallets into component wood pieces and comply with requirements for recycling wood.

(4) Crates: Break down crates into component wood pieces and comply with requirements for recycling wood.

E. Site-Clearing Wastes: Chip brush, branches, and trees on site.

F. Wood Materials:

(1) Clean Cut-Offs of Lumber: Grind or chip into small pieces.

(2) Clean Sawdust: Bag sawdust that does not contain painted or treated wood.

G. Gypsum Board: Stack large clean pieces on wood pallets and store in a dry location.

(1) Clean Gypsum Board: Grind scraps of clean gypsum board using small mobile chipper or hammer mill. Screen out paper after grinding.

3.03 DISPOSAL OF WASTE:

A. General: Except for items or materials to be salvaged, recycled, or otherwise reused, remove waste materials from Project Site and legally dispose of them in a landfill or incinerator acceptable to authorities having jurisdiction.

(1) Except as otherwise specified, do not allow waste materials that are to be disposed of accumulate on site.

(2) Remove and transport debris in a manner that will prevent spillage on adjacent surfaces and areas.

B. Burning: Do not burn waste materials.

C. Disposal: Transport waste materials off District property and legally dispose of them.

END OF SECTION

DOCUMENT 01 52 13

FIELD OFFICES

PART 1 – GENERAL

1.01 RELATED DOCUMENTS AND PROVISIONS:

All Contract Documents should be reviewed for applicable provisions related to the provisions in this document, including without limitation:

A. General Conditions;

B. Special Conditions; and

C. Temporary Facilities and Controls.

1.02 SECTION INCLUDES:

A. Requirements for Field Offices and Field Office Trailers.

1.03 SUMMARY:

A. General: Contractor shall provide District's Field Office Trailer and contents, for District's use exclusively, during the term of the Contract.

B. Property: Trailer, furniture, furnishings, equipment, and the like, supplied by the Contractor with the Office Trailer shall remain the property of the Contractor; District property items installed, delivered, and the like by District within the Office Trailer will remain District's property.

C. Modifications: District reserves the right to modify the trailer or contents, or both, as may be deemed proper by District.

D. Condition: Trailer and contents shall be clean, neat, substantially finished, in good, proper, and safe condition for use, operation, and the like; the trailer and contents shall not be required to be new.

E. Installation Timing: Provide safe, fully furnished, functional, proper, complete, and finished trailer properly ready for entire use, within fourteen (14) calendar days of District's notification of the issuance of Notice to Proceed.

1.04 SUBMITTALS:

A. General: Submit submittals to District in quantity, format, type, and the like, as specified herein.

B. Office Trailer Data: One (1) copy of manufacturer's descriptive data, technical descriptions, regulatory compliance, industry standards, installation, removal, and maintenance instructions.

C. Equipment Data: Two (2) copies of manufacturer data for each type of equipment, if directed by District.

D. Furniture and Furnishings Data: Two (2) copies of manufacturer data for each type of equipment, if directed by District.

E. Plans: One (1) reproducible copy of appropriately scaled plans of trailer layout. Plans shall include, but not be limited to: lighting; furniture; equipment; telephone and electrical outlets; and the like.

F. Product Samples: One (1) complete and entire unit of each type, if directed by District.

1.05 QUALITY ASSURANCE

A. Standards: In the event that provisions of codes, regulations, safety orders, Contract Documents, referenced manufacturer's specifications, manufacturer's instructions, industry standards, and the like, are in conflict, the more restrictive and higher quality shall govern.

B. Installer: Installer or Installers engaged by Contractor must have a minimum of five (5) years of documented and properly authenticated successful experience of specialization in the installation of the items or systems, or both, specified herein.

C. Manufacturer: Contractor shall obtain products from nationally and industry recognized Manufacturer with five (5) years minimum, of immediately recent, continuous, documented and properly authenticated successful experience of specialization in the manufacture of the product specified herein.

D. State Personnel Training: Provide proper training for maintenance and operations, including emergency procedures, and the like, as directed by District.

E. Units: Shall be sound and free of defects, and shall not include any damage or defect that will impair the safety, installation, performance, or the durability of the entire Office Trailer and appurtenant systems.

1.06 REGULATORY REQUIREMENTS

A. General: Work shall be executed in accordance with applicable Codes, Regulations, Statutes, Enactment's, Rulings, Laws, each authority having jurisdiction, and including, but not limited to, Regulatory Requirements specified herein.

B. California Building Standards Code ("CBSC").

C. California Code of Regulations, Title 25, Chapter 3, Sub Chapter 2, Article 3 ("CCR").

D. Coach Insignia: Trailer shall display California Commercial Coach Insignia; such insignia shall be deemed to show that the trailer is in accordance with the Construction and Fire Safety requirements of CCR.

PART 2 – PRODUCTS

2.01 FIELD OFFICE TRAILER

A. General: Provide entire Field Office Trailer of type, function, operation, capacity, size, complete with controls, safety devices, accessories, and the like, for proper and durable installation. Partitions, walls, ceiling, and other interior and exterior surfaces shall be appropriately finished, including, but not limited to, trim, painting, wall base, floor covering, suspended or similar ceiling, and the like; provide systems, components, units, nuts, bolts, screws, anchoring devices, fastening devices, washers, accessories, adhesives, sealants, and other items of type, grade, and class required for the particular use, not identified but required for a complete, weather-tight, appropriately operating, and finished installation.

B. Manufacturers: General Electric Capital Modular Space; The Space Place, Inc.; or equal.

C. Program: Provide a wheel-mounted trailer with stairs, landings, platforms, ramps, stairs, platforms, and the like, in good, proper, safe, clean, and properly finished condition; with proper heavy duty locks, and other proper and effective security at all doors, windows, and the like. Trailer shall be maintained in good, proper, safe, clean, and properly finished condition during the Contract.

(1) Nominal Trailer Size: Four hundred eighty (480) square feet, minimum.

(2) Stairs, Platform: Properly finished stairs, platforms, and ramps.

(3) Doors: Two (2), three (3) foot wide exterior doors with locksets; finished ramp, steps, and entry platform at each exterior door.

(4) Keys: Submit five (5) keys for each door, window, furniture unit, and the like, there shall be no other key copies or originals available; each key shall be identified for District; and shall be labeled, or tagged or both, as directed by District.

(5) HVAC: **[PROVIDE DESCRIPTION OR DELETE]**

(6) Lighting: Sixty-five (65) foot-candles illumination minimum at any point, at thirty (30) inches above finished floor throughout from fluorescent light source, exclusively, or as directed by District.

(7) Electrical Outlets: One (1) duplex outlet evenly spaced every twelve (12) linear horizontal feet of wall face, and electrical service ready for use.

(8) Telephones and Telephone Outlets: Two (2) telephone lines wired, connected to telephone utility service, and ready for use, and two (2) telephone instruments, each with two (2)-line capability, speed dial and hands-free feature. Locate each outlet as directed by District.

(9) Answering Machine: One (1) unit, two (2)-line; digital.

2.02 FIELD OFFICE TRAILER ITEMS

A. General: Provide the Field Office Trailer with the following arranged into two (2) workstations:

(1) Desks: Two (2) desks: thirty-six (36) inches by sixty (60) inches; steel, laminated plastic top; locking, one (1) or two (2) file drawers single pedestal; steel; provide five (5) keys to District.

(2) Tables: Two (2) tables; thirty-six (36) inches by sixty (60) inches; twenty-nine (29) inches high; steel, laminated plastic top tables; one (1) at each desk.

(3) Chairs: Two (2) chairs: swivel; steel; with seat cushion and arms; one (1) at each desk.

(4) Waste Baskets: Two (2) waste baskets, one at each desk.

B. Furniture and Equipment: Provide in the space located to effect efficient and logical use.

(1) File Cabinet: One (1) file cabinet: four (4) drawer; lateral; steel locking.

(2) Plan Table: One (1) plan table: thirty-six (36) inches deep by seventy-two (72) inches wide by forty-two (42) inches high; adjustable; wood or steel; with lockable plan and pencil drawers.

(3) Drafting Stool: One (1) drafting stool; swiveling; steel; padded; adjustable; with footrest and casters.

(4) Bookshelf: One (1) bookshelf: thirty-six (36) inches deep by seventy-two (72) inches wide by forty-two (42) inches high; adjustable; wood or steel; with lockable plan and pencil drawer.

(5) Plan Rack: One (1) wheel mounted plan rack.

(6) Waste Baskets: One (1) large waste basket.

(7) Coat/Hat Hanger: Wall mounted with minimum capacity for four (4) garments and ten (10) hats.

(8) Document Management System: Shall include an integrated high-volume printer, copier, and facsimile machine, including stand, base, and storage cabinet; and shall include the following features:

(a) Type: Laser, dry electrostatic transfer, plain paper, digital, multi-function imaging system.

(b) Network: Ethernet or Token Ring network ready, Plug-and-Play.

(c) Print, send/receive facsimile from any connected workstation.

(d) Resolution: Six hundred (600) dots per inch by six hundred (600) dots per inch, minimum.

(e) Print Speed: Twenty (20) pages per minute, minimum.

(f) Copies: Twenty (20) copies per minute, minimum.

(g) Document Handler: Forty (40) sheet, minimum

(h) Collator: Forty (40) bin, minimum, with stapling.

(i) Duplexing: Capable.

(j) Paper Size: Capable of handling paper sizes to eleven (11) inches by seventeen (17) inches.

(k) Paper Cassettes: One (1) each for eight and one half (8.5) inches by eleven (11) inches, eight and one half (8.5) inches by fourteen (14) inches, and eleven (11) inches by seventeen (17) inches paper sizes; minimum two hundred fifty (250) sheets per cassette.

(l) Reduction/Enlargement: Capable of reduction to twenty-five percent (25%) and enlargement to two hundred percent (200%).

(m) Facsimile Electronic Storage: Capable of storing minimum of fifty (50) speed dial numbers, group faxing and broadcast faxing.

(n) Facsimile Scanning: Capable of scanning into memory a minimum of one hundred (100) pages with maximum scan time of three (3) seconds per page.

(o) Halftone: Sixty-four (64) levels.

(p) Redial: Automatic and Manual.

(9) Maintenance: Contractor shall purchase service agreements for each unit of equipment for the duration of the project plus two (2) months, and shall maintain all equipment in proper working condition. Service agreements shall include provision for replacement of toner cartridges and other items required to effect proper unit use. Service agreements shall also provide for:

(a) Unlimited Service Calls.

(b) Same Day Response.

(c) All parts, labor, preventative maintenance and mileage.

(d) All chemicals, such as toner, fixing agent, and the like.

(e) System training and setup.

(10) Portable Toilets: Two (2); each shall include a urinal; each unit shall be a properly enclosed chemical unit conforming to ANSI Z4.3.

(a) Location: As directed by District.

(b) Maintenance: Maintain each unit and surrounding areas in a clean, hygienic and orderly manner, at all time. Empty, clean, and sanitize each unit each day at a location and time as directed by District.

(c) Removal: Relocate, or remove from the site, each Portable Toilet. Upon such directive by District, the Contractor shall forthwith relocate or remove each Portable Toilet and submit the affected areas to a condition which existed prior to the installation of each Portable Toilet, within three (3) calendar days, or as directed by District in writing, at no cost to District.

2.03 UTILITY AND SERVICES

A. Telephone Service: Contractor shall provide and interface the entire telephone service, and shall properly and timely pay for telephone service for District's non-long-distance use.

B. Electrical Service: Provide all proper connections and continuously pay for service for the duration of the Work.

2.04 FINISHES

A. General: Manufacturer standard finish system over surfaces properly cleaned, pretreated, and prepared to obtain proper bond; all visible surfaces shall be coated.

B. Finish: Color as selected by District from manufacturer standard palette.

PART 3 – EXECUTION

3.01 INSTALLATION

A. General: Properly prepare area and affected items to receive the Work. Set Work accurately in location, alignment, and elevation; rigidly, securely, and firmly anchor to appropriate structure; install plumb, straight, square, level, true, without racking, rigidly anchored to proper solid blocking, substrate, and the like; provide appropriate type and quantity of reinforcements, fasteners, adhesives, self-adhesive and other tapes; lubricants, coatings, accessories, and the like, as required for a complete, structurally rigid, stable, sound, and appropriately finished installation, in accordance with manufacturer's published instructions, and as indicated. The more restrictive and higher quality requirement shall govern. Moving parts shall be properly secured, without binding, looseness, noise, and the like.

B. Installation: Install in accordance with 25 CCR 3.2.3 and as directed by District; jack up trailer and level both ways; mount on proper concrete piers with all load off wheels;

provide required tie down and accessories per Section 4368 of referenced CCR, and as directed by District.

C. Rejected Work: Work, materials, unit, items, systems, and the like, not accepted by District shall be deemed rejected, and shall forthwith be removed and replaced with proper and new Work, materials, unit, items, systems, and the like at no cost to District.

D. Standard: Comply with manufacturer's published instructions, or with instructions as shown or indicated; the more restrictive and higher quality requirement shall govern.

E. Location: As directed by District.

F. Fire Resistance: Construct and install in accordance with UL requirements.

G. Maintenance: Contractor shall maintain trailer and adjacent areas in a safe, clean and hygienic condition throughout the duration of the Work, and as directed by District. Properly repair or replace furniture or other items, as directed by District. Properly remove unsafe, damaged, or broken furniture, or similar items, and replace with safe and proper items. Contractor shall pay cost of all services, repair, and maintenance, or replacement of each item.

H. Janitorial Service: Provide professional janitorial services, including, but not limited to, trash, waste paper baskets, fill paper dispensers; clean and dust all furniture, files, and the like; sweep and mop resilient and similar flooring; and vacuum carpeting and similar flooring.

(1) Frequency: Two (2) times per week, minimum.

I. Removal: Properly remove the Office Trailer and contents from the Site upon completion of the Contract, or as directed by District in writing. Forthwith properly patch and repair affected areas; replace damaged items with new items. Carefully and properly inventory, clean, pack, store, and protect District property; submit District property to District at a date, time and location as directed by District.

END OF DOCUMENT

DOCUMENT 01 64 00

OWNER-FURNISHED PRODUCTS

PART 1 – GENERAL

1.01 RELATED DOCUMENTS AND PROVISIONS:

All Contract Documents should be reviewed for applicable provisions related to the provisions in this document, including without limitation:

A. General Conditions;

B. Special Conditions; and

C. Materials and Equipment.

1.02 SECTION INCLUDES:

A. Requirements for the following:

(1) Installing Owner-furnished materials and equipment.

(2) Providing necessary utilities, connections and rough-ins.

1.03 DEFINITIONS

A. Owner: District, who is providing/furnishing materials and equipment.

B. Installer Contactor: Contractor, who is installing the materials and equipment furnished by the Owner.

1.04 PRODUCT DELIVERY, STORAGE, AND HANDLING:

A. Receive, store and handle products in accordance with the manufacturer's instructions.

B. Protect equipment items as required to prevent damage during storage and construction.

PART 2 – PRODUCTS

2.01 GENERAL PRODUCT REQUIREMENTS:

A. Installer Contractor's Responsibilities:

(1) Verify mounting and utility requirements for Owner-furnished materials and equipment items.

(2) Provide mounting and utility rough in for all items where required.

(a) Rough in locations, sizes, capacities, and similar type items shall be as indicated and required by product manufacturer.

B. Owner and Installer Contractor(s) Responsibilities:

(1) Owner-Furnished/Contractor Installed ("OFCI"): Furnished by the Owner; installed by the Installer Contractor.

(a) General: Owner and Installer Contractor(s) will coordinate deliveries of materials and equipment to coincide with the construction schedule.

(b) Owner will furnish specified materials and equipment delivered to the site. Owner/vendor's representative shall be present on Site at the time of delivery to comply with the contract requirements and Specifications Section 01 43 00, Materials and Equipment, Article 1.04.

(c) The Owner furnishing specified materials and equipment is responsible to provide manufacturer guarantees as required by the Contract to the Installer Contractor.

(d) The Installer Contractor shall:

1) Review, verify and accept the approved manufacturer's submittal/Shop Drawings for all materials and equipment required to be installed by the Installer Contractor and furnished by the Owner. Any discrepancies, including but not limited to possible space conflicts, should be brought to the attention of the Project Manager and/or Program Manager, if applicable.

2) Coordinate timely delivery. Installer Contractor shall receive materials and equipment at Site when delivered and give written receipt at time of delivery, noting visible defects or omissions; if such declaration is not given, the Installer Contractor shall assume responsibility for such defects and omissions.

3) Store materials and equipment until ready for installation and protect from loss and damage. Installer Contractor is responsible for providing adequate storage space.

4) Coordinate with other bid package contractors and field measurement to ensure complete installation.

5) Uncrate, assemble, and set in place.

6) Provide adequate supports.

7) Install materials and equipment in accordance with manufacturer's recommendations, instructions, and Shop Drawings, supplying labor and material required and making mechanical, plumbing, and electrical connections required to operate equipment.

8) Be certified by equipment manufacturer for installation of the specific equipment supplied by the Owner.

9) Provide anchorage and/or bracing as required for seismic restraint per Title 24, UBC Standard 27-11 and all other applicable codes.

10) Provide the contract-required warranty/guarantee for all work, materials/equipment and installation upon its completion and acceptance by the District. Guarantee includes all costs associated with the removal, shipping to and from the Site, and re-installation of any equipment found to be defective.

C. Compatibility with Space and Service Requirements:

(1) Equipment items shall be compatible with space limitations indicated and as shown on the Contract Documents and specified in other sections of the Specifications.

(2) Modifications to equipment items required to conform to space limitations specified for rough in shall not cause additional cost to the District.

D. Manufacturer's printed descriptions, specifications, and instructions shall govern the Work unless specifically indicated or specified otherwise.

2.02 FURNISHED MATERIALS AND EQUIPMENT

A. All furnished materials and equipment are indicated or scheduled on the Contract Documents.

PART 3 – EXECUTION

3.01 INSTALLATION

A. Install equipment items in accordance with the manufacturer's instructions.

B. Set equipment items securely in place, rigidly or flexibly mounted in accordance with manufacturers' directions.

C. Make electrical and mechanical connections as indicated and required.

D. Touch-up and restore damaged or defaced finishes to the District's satisfaction.

3.02 CLEANING AND PROTECTION

A. Repair or replace items not acceptable to the Architect.

B. Upon completion of installation, clean equipment items in accordance with manufacturer's recommendations, and protect from damage until final acceptance of the Work by the District.

END OF DOCUMENT

SECTION 01 66 00

PRODUCT DELIVERY, STORAGE, AND HANDLING

PART 1 - GENERAL

1.01 RELATED DOCUMENTS AND PROVISIONS

All Contract Documents should be reviewed for applicable provisions related to the provisions in this document, including without limitation:

A. General Conditions, including, without limitation, Site Access, Conditions and Requirements;

B. Special Conditions.

1.02 PRODUCTS

A. Products are as defined in the General Conditions.

B. Contractor shall not use and/or reuse materials and/or equipment removed from existing Premises, except as specifically permitted by the Contract Documents.

C. Contractor shall provide interchangeable components of the same manufacturer, for similar components.

1.03 TRANSPORTATION AND HANDLING

A. Contractor shall transport and handle Products in accordance with manufacturer's instructions.

B. Contractor shall promptly inspect shipments to confirm that Products comply with requirements, quantities are correct, and products are undamaged.

C. Contractor shall provide equipment and personnel to handle Products by methods to prevent soiling, disfigurement, or damage.

1.04 STORAGE AND PROTECTION

A. Contractor shall store and protect Products in accordance with manufacturer's instructions, with seals and labels intact and legible. Contractor shall store sensitive products in weather-tight, climate controlled enclosures.

B. For exterior storage of fabricated Products, Contractor shall place on sloped supports, above ground.

C. Contractor shall provide off-site storage and protection when Site does not permit on-site storage or protection.

D. Contractor shall cover products subject to deterioration with impervious sheet covering and provide ventilation to avoid condensation.

E. Contractor shall store loose granular materials on solid flat surfaces in a well-drained area and prevent mixing with foreign matter.

F. Contractor shall provide equipment and personnel to store Products by methods to prevent soiling, disfigurement, or damage.

G. Contractor shall arrange storage of Products to permit access for inspection and periodically inspect to assure Products are undamaged and are maintained under specified conditions.

PART 2 – PRODUCTS Not Used.

PART 3 - EXECUTION Not Used.

END OF DOCUMENT

DOCUMENT 01 71 23

FIELD ENGINEERING

PART 1 - GENERAL

1.01 RELATED DOCUMENTS AND PROVISIONS:

All Contract Documents should be reviewed for applicable provisions related to the provisions in this document, including without limitation:

A. General Conditions, including, without limitation, Site Investigation, and Soils Investigation Report;

B. Special Conditions;

C. Site-Visit Certification.

1.02 REQUIREMENTS INCLUDED:

A. Contractor shall provide and pay for field engineering services by a California-registered engineer, required for the project, including, without limitations:

(1) Survey work required in execution of the Project.

(2) Civil or other professional engineering services specified, or required to execute Contractor's construction methods.

1.03 QUALIFICATIONS OF SURVEYOR OR ENGINEERS:

Contractor shall only use a qualified licensed engineer or registered land surveyor, to whom District makes no objection.

1.04 SURVEY REFERENCE POINTS:

A. Existing basic horizontal and vertical control points for the Project are those designated on the Drawings.

B. Contractor shall locate and protect control points prior to starting Site Work and preserve all permanent reference points during construction. In addition Contractor shall:

(1) Make no changes or relocation without prior written notice to District and Architect.

(2) Report to District and Architect when any reference point is lost or destroyed, or requires relocation because of necessary changes in grades or locations.

(3) Require surveyor to replace Project control points based on original survey control that may be lost or destroyed.

1.05 RECORDS:

Contractor shall maintain a complete, accurate log of all control and survey work as it progresses.

1.06 SUBMITTALS:

A. Contractor shall submit name and address of Surveyor and Professional Engineer to District and Architect prior to its/their work on the Project.

B. On request of District and Architect, Contractor shall submit documentation to verify accuracy of field engineering work, at no additional cost to the District.

C. Contractor shall submit a certificate signed by registered engineer or surveyor certifying that elevations and locations of improvements are in conformance or nonconformance with Contract Documents.

PART 2 – PRODUCTS Not Used.

PART 3 - EXECUTION

3.01 COMPLIANCE WITH LAWS:

Contractor is responsible for meeting all applicable codes, OSHA, safety and shoring requirements.

3.02 NONCONFORMING WORK:

Contractor is responsible for any re-surveying required by correction of nonconforming work.

END OF DOCUMENT

DOCUMENT 01 73 29

CUTTING AND PATCHING

1. PART 1 – GENERAL

1.01 RELATED DOCUMENTS AND PROVISIONS:

All Contract Documents should be reviewed for applicable provisions related to the provisions in this document, including without limitation:

A. General Conditions, including, without limitation, Inspector, Inspections, and Tests, Integration of Work, Nonconforming Work, and Correction of Work, and Uncovering Work;

B. Special Conditions;

C. Hazardous Materials Procedures and Requirements;

D. Hazardous Materials Certification;

E. Lead-Based Paint Certification;

F. Imported Materials Certification.

1.02 CUTTING AND PATCHING:

A. Contractor shall be responsible for all cutting, fitting, and patching, including associated excavation and backfill, required to complete the Work or to:

(1) Make several parts fit together properly.

(2) Uncover portions of Work to provide for installation of ill-timed Work.

(3) Remove and replace defective Work.

(4) Remove and replace Work not conforming to requirements of Contract Documents.

(5) Remove Samples of installed Work as specified for testing.

(6) Provide routine penetrations of non-structural surfaces for installation of piping and electrical conduit.

(7) Attaching new materials to existing remodeling areas – including painting (or other finishes) to match existing conditions.

B. In addition to Contract requirements, upon written instructions from the District, Contractor shall uncover Work to provide for observations of covered Work in accordance with the Contract Documents; remove samples of

installed materials for testing as directed by District; and remove Work to provide for alteration of existing Work.

C. Contractor shall not cut or alter Work, or any part of it, in such a way that endangers or compromises the integrity of the Work, the Project, or work of others.

1.03 SUBMITTALS:

A. Prior to any cutting or alterations that may affect the structural safety of Project, or work of others, and well in advance of executing such cutting or alterations, Contractor shall submit written notice to District pursuant to the applicable notice provisions of the Contract Documents, requesting consent to proceed with the cutting or alteration, including the following:

(1) The work of the District or other trades.

(2) Structural value or integrity of any element of Project.

(3) Integrity or effectiveness of weather-exposed or weather-resistant elements or systems.

(4) Efficiency, operational life, maintenance or safety of operational elements.

(5) Visual qualities of sight-exposed elements.

B. Contractor's Request shall also include:

(1) Identification of Project.

(2) Description of affected Work.

(3) Necessity for cutting, alteration, or excavations.

(4) Affects of Work on District, other trades, or structural or weatherproof integrity of Project.

(5) Description of proposed Work:

(a) Scope of cutting, patching, alteration, or excavation.

(b) Trades that will execute Work.

(c) Products proposed to be used.

(d) Extent of refinishing to be done.

(6) Alternates to cutting and patching.

(7) Cost proposal, when applicable.

(8) The scheduled date the Contractor intends to perform the Work and the duration of time to complete the Work.

(9) Written permission of other trades whose Work will be affected.

1.04 QUALITY ASSURANCE:

A. Contractor shall ensure that cutting, fitting, and patching shall achieve security, strength, weather protection, appearance for aesthetic match, efficiency, operational life, maintenance, safety of operational elements, and the continuity of existing fire ratings.

B. Contractor shall ensure that cutting, fitting, and patching shall successfully duplicate undisturbed adjacent profiles, materials, textures, finishes, colors, and that materials shall match existing construction. Where there is dispute as to whether duplication is successful or has been achieved to a reasonable degree, the District's decision shall be final.

1.05 PAYMENT FOR COSTS:

A. Cost caused by ill-timed or defective Work or Work not conforming to Contract Documents, including costs for additional services of the District, its consultants, including but not limited to the Construction Manager, the Architect, the Project Inspector(s), Engineers, and Agents, will be paid by Contractor and/or deducted from the Contract by the District.

B. District shall only pay for cost of Work if it is part of the original Contract Price or if a change has been made to the contract in compliance with the provisions of the General Conditions. Cost of Work performed upon instructions from the District, other than defective or nonconforming Work, will be paid by District on approval of written Change Order. Contractor shall provide written cost proposals prior to proceeding with cutting and patching.

PART 2 - PRODUCTS

2.01 MATERIALS:

A. Contractor shall provide for replacement and restoration of Work removed. Contractor shall comply with the Contract Documents and with the Industry Standard(s), for the type of Work, and the Specification requirements for each specific product involved. If not specified, Contractor shall first recommend a product of a manufacturer or appropriate trade association for approval by the District.

B. Materials to be cut and patched include those damaged by the performance of the Work.

PART 3 – EXECUTION

3.01 INSPECTION:

A. Contractor shall inspect existing conditions of the Site and the Work, including elements subject to movement or damage during cutting and patching, excavating and backfilling. After uncovering Work, Contractor shall inspect conditions affecting installation of new products.

B. Contractor shall report unsatisfactory or questionable conditions in writing to District as indicated in the General Conditions and shall proceed with Work as indicated in the General Conditions by District.

3.02 PREPARATION:

A. Contractor shall provide shoring, bracing and supports as required to maintain structural integrity for all portions of the Project, including all requirements of the Project.

B. Contractor shall provide devices and methods to protect other portions of Project from damage.

C. Contractor shall, provide all necessary protection from weather and extremes of temperature and humidity for the Project, including without limitation, any work that may be exposed by cutting and patching Work. Contractor shall keep excavations free from water.

3.03 ERECTION, INSTALLATION AND APPLICATION:

A. With respect to performance, Contractor shall:

(1) Execute fitting and adjustment of products to provide finished installation to comply with and match specified tolerances and finishes.

(2) Execute cutting and demolition by methods that will prevent damage to other Work, and provide proper surfaces to receive installation of repairs and new Work.

(3) Execute cutting, demolition excavating, and backfilling by methods that will prevent damage to other Work and damage from settlement.

B. Contractor shall employ original installer or fabricator to perform cutting and patching for:

(1) Weather-exposed surfaces and moisture-resistant elements such as roofing, sheet metal, sealants, waterproofing, and other trades.

(2) Sight-exposed finished surfaces.

C. Contractor shall execute fitting and adjustment of products to provide a finished installation to comply with specified products, functions, tolerances,

and finishes as shown or specified in the Contract Documents including, without limitation, the Drawings and Specifications.

D. Contractor shall fit Work airtight to pipes, sleeves, ducts, conduit, and other penetrations through surfaces. Contractor shall conform to all Code requirements for penetrations or the Drawings and Specifications, whichever calls for a higher quality or more thorough requirement. Contractor shall maintain integrity of both rated and non-rated fire walls, ceilings, floors, etc.

E. Contractor shall restore Work which has been cut or removed. Contractor shall install new products to provide completed Work in accordance with requirements of the Contract Documents and as required to match surrounding areas and surfaces.

F. Contractor shall refinish all continuous surfaces to nearest intersection as necessary to match the existing finish to any new finish.

END OF DOCUMENT

DOCUMENT 01 76 00

ALTERATION PROJECT PROCEDURES

PART 1 – GENERAL

1.01 RELATED DOCUMENTS AND PROVISIONS:

All Contract Documents should be reviewed for applicable provisions related to the provisions in this document, including without limitation:

A. General Conditions, including, without limitation, Integration of Work, Purchase of Materials and Equipment, Uncovering of Work and Non-conforming Work and Correction of Work and Trenches;

B. Special Conditions.

PART 2 - PRODUCTS

2.01 PRODUCTS FOR PATCHING AND EXTENDING WORK:

A. New Materials: As specified in the Contract Documents including, without limitation, in the Specifications, Contractor shall match existing products, conditions, and work for patching and extending work.

B. Type and Quality of Existing Products: Contractor shall determine by inspection, by testing products where necessary, by referring to existing conditions and to the Work as a standard.

PART 3 - EXECUTION

3.01 EXAMINATION:

A. Contractor shall verify that demolition is complete and that areas are ready for installation of new Work.

B. By beginning restoration Work, Contract or acknowledges and accepts the existing conditions.

3.02 PREPARATION:

A. Contractor shall cut, move, or remove items as necessary for access to alterations and renovation Work. Contractor shall replace and restore these at completion.

B. Contractor shall remove unsuitable material not as salvage unless otherwise indicated in the Contract Documents. Unsuitable material may include, without limitation, rotted wood, corroded metals, and deteriorated masonry and concrete. Contractor shall replace materials as specified for finished Work.

C. Contractor shall remove debris and abandoned items from all areas of the Site and from concealed spaces.

D. Contractor shall prepare surface and remove surface finishes to provide for proper installation of new Work and finishes.

E. Contractor shall close openings in exterior surfaces to protect existing work from weather and extremes of temperature and humidity. Contractor shall insulate ductwork and piping to prevent condensation in exposed areas. Contractor shall insulate building cavities for thermal and/or acoustical protection, as detailed.

3.03 INSTALLATION:

A. Contractor shall coordinate Work of all alternations and renovations to expedite completion and to accommodate District occupancy.

B. Designated Areas and Finishes: Contractor shall complete all installations in all respects, including operational, mechanical work and electrical work.

C. Contractor shall remove, cut, and patch Work in a manner to minimize damage and to provide a means of restoring Products and finishes to original or specified condition.

D. Contractor shall refinish visible existing surfaces to remain in renovated rooms and spaces, to specified condition for each material, with a neat transition to adjacent finishes.

E. Contractor shall install products as specified in the Contract Documents, including without limitation, the Specifications.

3.04 TRANSITIONS:

A. Where new Work abuts or aligns with existing, Contractor shall perform a smooth and even transition. Patched Work must match existing adjacent work in texture and appearance.

B. When finished surfaces are cut so that a smooth transition with new Work is not possible, Contractor shall terminate existing surface along a straight line at a natural line of division and make a recommendation for resolution to the District and the Architect for review and approval.

3.05 ADJUSTMENTS:

A. Where removal of partitions or walls results in adjacent spaces becoming one, Contractor shall rework floors, walls, and ceilings to a smooth plane without breaks, steps, or bulkheads.

B. Where a change of plane of 1/4 inch or more occurs, Contractor shall submit a recommendation for providing a smooth transition to the District and the Architect for review and approval.

C. Contractor shall trim existing doors as necessary to clear new floor finish and refinish trim as required.

D. Contractor shall fit Work at penetrations of surfaces.

3.06 REPAIR OF DAMAGED SURFACES:

A. Contractor shall patch or replace portions of existing surfaces which are damaged, lifted, discolored, or showing other imperfections.

B. Contractor shall repair substrate prior to patching finish.

3.07 CULTIVATED AREAS AND OTHER SURFACE IMPROVEMENTS:

A. Cultivated or planted areas and other surface improvements which are damaged by actions of the Contractor shall be restored by Contractor to their original condition or better, where indicated.

B. Contractor shall protect and replace, if damaged, all existing guard posts, barricades, and fences.

C. Contractor shall give special attention to avoid damaging or killing trees, bushes and/or shrubs on the Premises and/or identified the Contract Documents, including without limitation, the Drawings.

3.08 FINISHES:

A. Contractor shall finish surfaces as specified in the Contract Documents, including without limitations, the provisions of all Divisions of the Specifications.

B. Contractor shall finish patches to produce uniform finish and texture over entire area. When finish cannot be matched, Contractor shall refinish entire surface to nearest intersections.

3.09 CLEANING:

A. Contractor shall continually clean the Site and the Premises as indicated in the Contract Documents, including without limitation, the provisions in the General Conditions and the Specifications regarding cleaning.

END OF DOCUMENT

DOCUMENT 01 77 00

CONTRACT CLOSEOUT AND FINAL CLEANING

PART 1 - GENERAL

1.01 RELATED DOCUMENTS AND PROVISIONS

All Contract Documents should be reviewed for applicable provisions related to the provisions in this document, including without limitation:

A. General Conditions, including, without limitation, Completion of Work;

B. Special Conditions;

C. Temporary Facilities and Controls.

1.02 CLOSEOUT PROCEDURES

Contractor shall comply with all closeout provisions as indicated in the General Conditions.

1.03 FINAL CLEANING

A. Contractor shall execute final cleaning prior to final inspection.

B. Contractor shall clean interior and exterior glass and surfaces exposed to view; remove temporary labels, tape, stains, and foreign substances, polish transparent and glossy surfaces, wax and polish new vinyl floor surfaces, vacuum carpeted and soft surfaces.

C. Contractor shall clean equipment and fixtures to a sanitary condition.

D. Contractor shall replace filters of operating equipment.

E. Contractor shall clean debris from roofs, gutters, down spouts, and drainage systems.

F. Contractor shall clean Site, sweep paved areas, and rake clean landscaped surfaces.

G. Contractor shall remove waste and surplus materials, rubbish, and construction facilities from the Site.

1.04 ADJUSTING

Contractor shall adjust operating products and equipment to ensure smooth and unhindered operation.

1.05 RECORD DOCUMENTS AND SHOP DRAWINGS

A. Contractor shall legibly mark each item to record actual construction, including:

(1) Measured depths of foundation in relation to finish floor datum.

(2) Measured horizontal and vertical locations of underground utilities and appurtenances, referenced to permit surface improvements.

(3) Measured locations of internal utilities and appurtenances concealed in construction, referenced to visible and accessible features of the Work.

(4) Field changes of dimension and detail.

(5) Details not on original Contract Drawings

(6) Changes made by modification(s).

(7) References to related Shop Drawings and modifications.

B. Contractor will provide one set of Record Drawings to District.

C. Contractor shall submit all required documents to District and/or Architect prior to or with its final Application for Payment.

1.06 INSTRUCTION OF DISTRICT PERSONNEL

A. Before final inspection, at agreed upon times, Contractor shall instruct District's designated personnel in operation, adjustment, and maintenance of products, equipment, and systems.

B. For equipment requiring seasonal operation, Contractor shall perform instructions for other seasons within six months.

C. Contractor shall use operation and maintenance manuals as basis for instruction. Contractor shall review contents of manual with personnel in detail to explain all aspects of operation and maintenance.

D. Contractor shall prepare and insert additional data in Operation and Maintenance Manual when need for such data becomes apparent during instruction.

E. Contractor shall use operation and maintenance manuals as basis for instruction. Contractor shall review contents of manual with personnel in detail to explain all aspects of operation and maintenance.

1.07 SPARE PARTS AND MAINTENANCE MATERIALS

A. Contractor shall provide products, spare parts, maintenance, and extra materials in quantities specified in the Specifications and in Manufacturer's recommendations.

B. Contractor shall provide District all required Operation and Maintenance Data.

PART 2 – PRODUCTS Not used.

PART 3 – EXECUTION Not used.

END OF DOCUMENT

DOCUMENT 01 78 23

OPERATION AND MAINTENANCE DATA

PART 1 – GENERAL

1.01 RELATED DOCUMENTS AND PROVISIONS:

All Contract Documents should be reviewed for applicable provisions related to the provisions in this document, including without limitation:

A. General Conditions, including, without limitation, Completion of the Work;

B. Special Conditions.

1.02 QUALITY ASSURANCE:

Contractor shall prepare instructions and data by personnel experienced in maintenance and operation of described products.

1.03 FORMAT:

A. Contractor shall prepare data in the form of an instructional manual entitled "OPERATIONS AND MAINTENANCE MANUAL & INSTRUCTIONS" ("Manual").

B. Binders: Contractor shall use commercial quality, 8-1/2 by 11 inch, three-side rings, with durable plastic covers; two inch maximum ring size. When multiple binders are used, Contractor shall correlate data into related consistent groupings.

C. Cover: Contractor shall identify each binder with typed or printed title "OPERATION AND MAINTENANCE MANUAL & INSTRUCTIONS"; and shall list title of Project and identify subject matter of contents.

D. Contractor shall arrange content by systems process flow under section numbers and sequence of Table of Contents of the Contract Documents.

E. Contractor shall provide tabbed fly leaf for each separate product and system, with typed description of product and major component parts of equipment.

F. Text: The content shall include Manufacturer's printed data, or typewritten data on 24 pound paper.

G. Drawings: Contractor shall provide with reinforced punched binder tab and shall bind in with text; folding larger drawings to size of text pages.

1.04 CONTENTS, EACH VOLUME:

A. Table of Contents: Contractor shall provide title of Project; names, addresses, and telephone numbers of the Architect, any engineers, subconsultants,

Subcontractor(s), and Contractor with name of responsible parties; and schedule of products and systems, indexed to content of the volume.

B. For Each Product or System: Contractor shall list names, addresses, and telephone numbers of Subcontractor(s) and suppliers, including local source of supplies and replacement parts.

C. Product Data: Contractor shall mark each sheet to clearly identify specific products and component parts, and data applicable to installation. Delete inapplicable information.

D. Drawings: Contractor shall supplement product data to illustrate relations of component parts of equipment and systems, to show control and flow diagrams. Contractor shall not use Project Record Documents as maintenance drawings.

E. Text: The Contractor shall include any and all information as required to supplement product data. Contractor shall provide logical sequence of instructions for each procedure, incorporating manufacturer's instructions.

F. Warranties and Bonds: Contractor shall bind in one copy of each.

1.05 MANUAL FOR MATERIALS AND FINISHES:

A. Building Products, Applied Materials, and Finishes: Contractor shall include product data, with catalog number, size, composition, and color and texture designations. Contractor shall provide information for re-ordering custom manufactured products.

B. Instructions for Care and Maintenance: Contractor shall include Manufacturer's recommendations for cleaning agents and methods, precautions against detrimental agents and methods, and recommended schedule for cleaning and maintenance.

C. Moisture Protection and Weather Exposed Products: Contractor shall include product data listing applicable reference standards, chemical composition, and details of installation. Contractor shall provide recommendations for inspections, maintenance, and repair.

D. Additional Requirements: Contractor shall include all additional requirements as specified in the Specifications.

E. Contractor shall provide a listing in Table of Contents for design data, with tabbed fly sheet and space for insertion of data.

1.06 MANUAL FOR EQUIPMENT AND SYSTEMS:

A. Each Item of Equipment and Each System: Contractor shall include description of unit or system, and component parts and identify function, normal operating characteristics, and limiting conditions. Contractor shall

include performance curves, with engineering data and tests, and complete nomenclature, and commercial number of replaceable parts.

B. Panelboard Circuit Directories: Contractor shall provide electrical service characteristics, controls, and communications.

C. Contractor shall include color coded wiring diagrams as installed.

D. Operating Procedures: Contractor shall include start-up, break-in, and routine normal operating instructions and sequences. Contractor shall include regulation, control, stopping, shut-down, and emergency instructions. Contractor shall include summer, winter, and any special operating instructions.

E. Maintenance Requirements: Contractor shall include routine procedures and guide for trouble-shooting; disassembly, repair, and reassembly instructions; and alignment, adjusting, balancing, and checking instructions.

F. Contractor shall provide servicing and lubrication schedule, and list of lubricants required.

G. Contractor shall include manufacturer's printed operation and maintenance instructions.

H. Contractor shall include sequence of operation by controls manufacturer.

I. Contractor shall provide original manufacturer's parts list, illustrations, assembly drawings, and diagrams required for maintenance.

J. Contractor shall provide control diagrams by controls manufacturer as installed.

K. Contractor shall provide Contractor's coordination drawings, with color coded piping diagrams as installed.

L. Contractor shall provide charts of valve tag numbers, with location and function of each valve, keyed to flow and control diagrams.

M. Contractor shall provide list of original manufacturer's spare parts, current prices, and recommended quantities to be maintained in storage.

N. Additional Requirements: Contractor shall include all additional requirements as specified in Specification(s).

O. Contractor shall provide a listing in Table of Contents for design data, with tabbed fly sheet and space for insertion of data.

1.08 SUBMITTAL:

A. Contractor shall submit to the District for review two (2) copies of preliminary draft or proposed formats and outlines of the contents of the Manual within thirty (30) days of Contractor's start of Work.

B. For equipment, or component parts of equipment put into service during construction and to be operated by District, Contractor shall submit draft content for that portion of the Manual within ten (10) days after acceptance of that equipment or component.

C. Contractor shall submit two (2) copies of a complete Manual in final form prior to final Application for Payment. Copy will be returned with Architect/Engineer comments. Contractor must revise the content of the Manual as required by District prior to District's approval of Contractor's final Application for Payment.

D. Contractor must submit two (2) copies of revised Manual in final form within ten (10) days after final inspection.

PART 2 – PRODUCTS Not Used.

PART 3 – EXECUTION Not Used.

END OF DOCUMENT

DOCUMENT 01 78 36

WARRANTIES

PART 1 - GENERAL

1.01 RELATED DOCUMENTS AND PROVISIONS

All Contract Documents should be reviewed for applicable provisions related to the provisions in this document, including without limitation:

A. General Conditions, including, without limitation, Warranty/Guarantee Information;

B. Special Conditions.

1.02 FORMAT

A. Binders: Contractor shall use commercial quality, 8-1/2 by 11 inch, three-side rings, with durable plastic covers; two inch maximum ring size.

B. Cover: Contractor shall identify each binder with typed or printed title "WARRANTIES" and shall list title of Project.

C. Table of Contents: Contractor shall provide title of Project; name, address, and telephone number of Contractor and equipment supplier, and name of responsible principal. Contractor shall identify each item with the number and title of the specific Specification, document, provision, or section in which the name of the product or work item is specified.

D. Contractor shall separate each warranty with index tab sheets keyed to the Table of Contents listing, providing full information and using separate typed sheets as necessary. Contractor shall list each applicable and/or responsible Subcontractor(s), supplier(s), and/or manufacturer(s), with name, address, and telephone number of each responsible principal(s).

1.03 PREPARATION:

A. Contractor shall obtain warranties, executed in duplicate by each applicable and/or responsible subcontractor(s), supplier(s), and manufacturer(s), within ten (10) days after completion of the applicable item or work. Except for items put into use with District's permission, Contractor shall leave date of beginning of time of warranty until the date of completion is determined.

B. Contractor shall verify that documents are in proper form, contain full information, and are notarized, when required.

C. Contractor shall co-execute submittals when required.

D. Contractor shall retain warranties until time specified for submittal.

1.04 TIME OF SUBMITTALS:

A. For equipment or component parts of equipment put into service during construction with District's permission, Contractor shall submit a draft warranty for that equipment or component within ten (10) days after acceptance of that equipment or component.

B. Contractor shall submit for District approval all warranties and related documents within ten (10) days after date of completion. Contractor must revise the warranties as required by the District prior to District's approval of Contractor's final Application for Payment.

C. For items of work delayed beyond date of completion, provide updated submittal within ten days after acceptance, listing the date of acceptance as start of warranty period.

PART 2 - PRODUCTS Not Used.

PART 3 – EXECUTION Not Used.

END OF DOCUMENT

DOCUMENT 01 78 39

RECORD DOCUMENTS

PART 1 - GENERAL

1.01 RELATED DOCUMENTS AND PROVISIONS:

All Contract Documents should be reviewed for applicable provisions related to the provisions in this document, including without limitation:

A. General Conditions, including, without limitation, Documents on Work;

B. Special Conditions.

PART 2 - RECORD DRAWINGS

2.01 GENERAL:

A. As indicated in the Contract Documents, the District will provide Contractor with one (1) set of reproductions (opaque) plans of the original Contract Drawings.

B. Contractor shall maintain at each Project Site one set of marked-up plans and shall transfer all changes and information to those marked-up plans, as often as required in the Contract Documents, but in no case less than once each month. Contractor shall submit to the Project Inspector one set of reproductions (opaque) of the Project Record Drawings ("As-Builts") showing all changes incorporated into the Work since the preceding monthly submittal. The As-Builts shall be available at the Project Site. The Contractor shall submit reproducible drawings (opaque) at the conclusion of the Project following review of the blueline prints.

C. Label and date each Record Drawing "RECORD DOCUMENT" in legibly printed letters.

D. All deviations in construction, including but not limited to pipe and conduit locations and deviations caused by without limitation Change Orders, Construction Claim Directives, RFI's, and Addenda, shall be accurately and legibly recorded by Contractor.

E. Locations and changes shall be done by Contractor in a neat and legible manner and, where applicable, indicated by drawing a "cloud" around the changed or additional information.

2.02 RECORD DRAWING INFORMATION:

A. Contractor shall record the following information:

(1) Locations of Work buried under or outside each building, including, without limitation, all utilities, plumbing and electrical lines, and conduits.

(2) Actual numbering of each electrical circuit.

(3) Locations of significant Work concealed inside each building whose general locations are changed from those shown on the Contract Drawings.

(4) Locations of all items, not necessarily concealed, which vary from the Contract Documents.

(5) Installed location of all cathodic protection anodes.

(6) Deviations from the sizes, locations, and other features of installations shown in the Contract Documents.

(7) Locations of underground work, points of connection with existing utilities, changes in direction, valves, manholes, catch basins, capped stubouts, invert elevations, etc.

(8) Sufficient information to locate Work concealed in each building with reasonable ease and accuracy.

In some instances, this information may be recorded by dimension. In other instances, it may be recorded in relation to the spaces in the building near which it was installed.

B. Contractor shall provide additional drawings as necessary for clarification.

C. Contractor shall provide reproducible record drawings, made from final Shop Drawings marked "No Exceptions Taken" or "Approved as Noted."

PART 3 - RECORD SPECIFICATIONS

3.01 GENERAL:

Contractor shall mark each section legibly to record manufacturer, trade name, catalog number, and supplier of each Product and item of equipment actually installed.

PART 4 - MAINTENANCE OF RECORD DOCUMENTS

4.01 GENERAL

A. Contractor shall store Record Documents apart from documents used for construction as follows:

(1) Provide files and racks for storage of Record Documents.

(2) Maintain Record Documents in a clean, dry, legible condition and in good order.

B. Do not use Record Documents for construction purposes.

PART 5 – SUBMITTAL

A. Contractor shall submit one (1) reproduction opaque copy or one (1) electronic pdf format on disc or thumb drive of a complete Record Document in final form prior to final Application for Payment. Copy will be returned with Architect/Engineer comments. Contractor must revise the content of the Record Document as required by District prior to District's approval of Contractor's final Application for Payment.

B. Contractor must submit one (1) reproduction opaque copy and one (1) electronic pdf format on disc or thumb drive of revised Record Document in final form within ten (10) days after final inspection.

END OF DOCUMENT

END OF DOCUMENTS
FOR
PROJECT MANUAL

SPECIFICATION SECTIONS FOR PROJECT MANUAL

SPECIFICATIONS

for

College of Marin Indian Valley Campus Organic Farm Classrooms

Novato, CA

Agency Resubmittal

DSA Application Number 01-116913
DSA File Number 21-C1

Prepared By

LPAS
2484 Natomas Park Drive, Suite 100
Sacramento, California 95833
916.443.0335
Fax 916.441.2823

LPAS Project No.: 1102-0005

FILE NUMBER: 21-C1
IDENTIFICATION STAMP
DIVISION OF THE STATE ARCHITECT
01 - 116913 INCR: 1
AC RE FLS ED SSR CD
DATE 01/12/2018

COLLEGE OF MARIN – INDIAN VALLEY CAMPUS

For The

ORGANIC FARM CLASSROOM SITE

DSA APPLICATION NUMBER 01-116913 DSA FILE NUMBER 21-C1

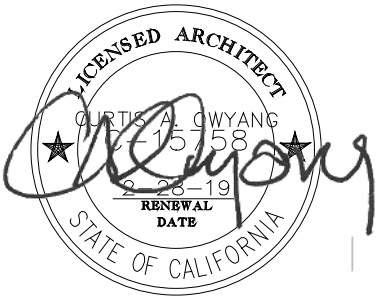		
ARCHITECT	CIVIL ENGINEER	ELECTRICAL ENGINEER
LANDSCAPE ARCHITECT	MECHANICAL ENGINNER	

Prepared By:
LPAS
2484 Natomas Park Drive, Suite 100
Sacramento, CA 95833
Ph: 916-443-0335 Fax 916-441-2823

SECTION 00 01 10
TABLE OF CONTENTS

PROCUREMENT AND CONTRACTING REQUIREMENTS

DIVISION 00 -- PROCUREMENT AND CONTRACTING REQUIREMENTS

00 00 10 - Directory

00 01 10 - Table of Contents

SPECIFICATIONS

DIVISION 01 -- GENERAL REQUIREMENTS

DIVISION 02 -- EXISTING CONDITIONS

02 40 00 - Demolition

DIVISION 03 -- CONCRETE

03 20 00 - Concrete Reinforcement

03 30 00 - Cast-In-Place Concrete

03 30 01 - Structural Concrete

DIVISION 05 -- METALS

05 12 00 - Structural Steel

05 31 00 - Steel Deck

DIVISION 07 – THERMAL AND MOISTURE PROTECTION

07 62 00 - Sheet Metal Flashing and Trim

DIVISION 09 -- FINISHES

09 91 13 - Exterior Painting

DIVISION 22 – PLUMBING

22 05 00 - Plumbing and Utilities

DIVISION 26 -- ELECTRICAL

26 00 10 - Basic Electrical Requirements

26 05 19 - Building Wire and Cable

26 05 26 - Grounding & Bonding

26 05 31 - Conduit

26 05 33 - Boxes

26 05 43 - Underground Ducts and Structures

26 05 53 - Electrical Identification

26 22 13 - Dry Type Transformers

26 24 16 - Panelboards

26 27 26 - Wiring Devices

26 28 16 - Overcurrent Protective Devices

26 56 00 - Exterior Lighting

DIVISION 31 -- EARTHWORK

31 10 00 - Site Clearing

31 02 00 - Earthwork

31 23 33 - Trenching and Backfilling

DIVISION 32 -- EXTERIOR IMPROVEMENTS

32 11 23 - Aggregate Base

32 12 16 - Asphalt Concrete Paving

32 16 13 - Concrete Curbs, Gutters, and Walks

32 84 00 - Irrigation

32 90 00 - Planting

32 91 14 - Bioretention Soil

DIVISION 33 -- UTILITIES

33 11 16 - Site Water Distribution System

33 30 00 - Sanitary Sewer

33 40 00 Site Drainage System

END OF SECTION

SECTION 02 40 00

DEMOLITION

PART 1 - GENERAL

1.01 SECTION INCLUDES

A. Specifications for the demolition and removal of structures, including backfilling of resultant excavations and depressions, as indicated.

B. Extent of demolition work shall be as follows:

1. Buildings and structure foundations, footings, and foundation systems shall be completely removed to the base of the foundation.

2. Utility services to facilities to be removed or demolished shall be disconnected, cut, and capped.

C. Restoration of existing structures and facilities to remain in place which are damaged by demolition and removal operations.

1.02 RELATED SECTIONS

A. Section 31 10 00 - Site Clearing

B. Section 01 50 00 - Temporary Facilities and Controls

1.03 REFERENCES

A. American National Standards Institute (ANSI)

ANSI A10.6 Safety Requirements for Demolition Operations

B. California Code of Regulations (CCR)

CCR Title 8, Chapter 4, Subchapter 4 – Construction Safety Orders

CCR Title 24, Part 2, California Building Code, Chapter 33, Section 3303, Protection of Pedestrians during Construction or Demolition

1.04 PERMITS

A. Obtain all special permits and licenses and give all notices required for performance and completion of the demolition and removal work, hauling, and disposal of debris.

1.05 SUBMITTALS

A. Demolition Plan

1. Submit a comprehensive demolition plan, describing the proposed sequence, methods, and equipment for demolition, removal, and disposal of structure(s); include salvage if required. Do not proceed with demolition until the designated approval authority has approved the demolition plan.

B. Shop Drawings

1. Include drawings in plan of all structures to be demolished. Indicate stages or phases of the demolition work.

C. Permits

1. Submit copies of demolition, hauling, and debris disposal permits and notices for record purposes. Include description of proposed haul routes.

1.06 WASTE DISPOSAL AND RECYCLING

A. The District has implemented strict recycling and waste management policies for all waste materials removed from his property as a result of construction and demolition activity. These include:

- Asphalt
- Concrete, concrete block, concrete masonry units (CMU), slump stone (decorative concrete block), and rocks
- Asphalt Concrete
- Brick
- Paper, including bond, newsprint, cardboard, mixed paper, packing materials, and packaging
- Cement Fiber Products, including shingles, panels, siding
- Paint
- Rigid Foam
- Glass
- Plastics
- Carpet and Pad
- Beverage Containers
- Insulation
- Gypsum Wallboard
- Porcelain Plumbing Fixtures
- Fluorescent Light Tubes, per local Sanitary Service regulations
- Green materials (i.e., tree trimmings and land clearing debris)
- Metals including, but not limited to, stud trim, ductwork, piping, reinforcing steel (rebar), roofing, other trim, steel, iron, galvanized sheet steel, stainless steel, aluminum, copper, zinc, lead, brass, and bronze (ferrous and non-ferrous)
- Soils
- Wood, including clean dimensional wood, pallet wood, plywood, oriented strand board (OSB), particleboard

B. The goal of this program is to earn credits towards “LEED Certification” by meeting or exceeding credit’s technical requirements. Regarding Section 02 40 00, the “Material and Resources” section of the LEED Rating System (latest version -- US Green Building Council) shall be followed.

C. The successful bidder will be required to account for all waste materials removed from the Project, and to recycle, salvage, or reuse, to the maximum practicable extent, all of the materials listed above. If the successful bidder believes that recycling, salvage, or reuse of any of these materials is impracticable, the bidder must so inform the District before initiation of the Project, and secure District’s written authorization for an alternative method of disposal.

D. The successful bidder will be required to develop and maintain a plan which documents procedures to recycle, salvage, or reuse the materials listed above, including separation and recycling procedures and markets for each material recovered. This plan must also address training and communications, recordkeeping, and reporting requirements to assure that all waste materials are accounted for. As the project proceeds, this plan is to be updated with the quantities of each waste that are actually reused salvaged, recycled, or disposed of, and the markets to which these materials are directed, so that it provides documentation in a single source of waste management performance on the Project.

E. The District retains the right to inspect, and subsequently approve or disapprove any and all recycling end markets, reuse or salvage outlets, and/or waste disposal facilities that are involved in the receipt of recyclables and/or waste materials generated from the Project. Disapproval of such a market or outlet may be based on past or current violations of federal or state environmental, health, or safety laws, improper disposal activities, risk or liability exposure, or any other reason deemed sufficient by the District.

F. The successful bidder shall maintain records for each type of material removed from the job site (including materials that are not recycled), provided the name(s) of specific end destinations for all materials removed (whether recycled or disposed of), and provide weights and measures of all materials removed. Every load of waste material must be weighed and these scale weights must be reported to the District on a monthly basis, retailing material types and net weights. The District retains the right to certify weights of sample loads of materials leaving the project site, and compare these to the weights submitted by the successful bidder. The District retains the right to request copies of original scale tickets for any and all materials removed from the Project up to two (2) years following the project completion.

1.07 SITE CONDITIONS

A. Erect and maintain temporary bracing, shoring, lights, barricades, signs, and other measures as necessary to protect the public, workers, and adjoining property from damage from demolition work, all in accordance with applicable codes and regulations.

B. Open depressions and excavations occurring as part of this work shall be barricaded and posted with warning lights when accessible through adjacent property or through public access. Operate warning lights during hours from dusk to dawn each day and as otherwise required.

C. Protect utilities, pavements, and facilities from damage caused by settlement, lateral movement, undermining, washout, and other hazards created by demolition operations.

D. Protection of Utilities: Protect active sewer, water, gas, electric, and other utilities; and drainage and irrigation lines indicated or, when not indicated, found or otherwise made known to the Contractor before or during demolition work.

E. Maintain existing utilities and protect from damage as necessary to satisfy the requirements of jurisdictional utility companies and related codes and regulations.

F. Make arrangements with affected utility companies and Districts to provide the information and services necessary to coordinate and complete the Work.

G. Do not disconnect or shut down any part of the existing utilities and services, except by permission of authorities having jurisdiction. Submit schedule of estimated shut-down

time in order to obtain such permission, and notify all interested parties, neighbors, utilities, and municipal and county authorities, as required.

H. Utilities to be removed shall not be removed until shut-down time can be kept to a minimum. Do not remove an existing utility line or service until the replacement line, crossover, or capping is ready to be performed.

I. Notify the Engineer and utility Districts 72 hours before performing any excavation work. Notify affected utilities by calling Underground Service Alert (USA) at 1-800-227-2600. Contact utility Districts not covered by USA, by calling the affected utility Districts directly.

J. Protect active underground utilities from damage. If underground utilities are damaged in any way, notify the Engineer and affected utilities immediately for corrective action.

K. Noise and Dust Abatement: Comply with requirements specified in Section 01 50 00 - Temporary Facilities and Controls. In addition, provide continuous noise and dust abatement as required to prevent disturbance and nuisance to the public and workers and to the occupants of adjacent premises and surrounding areas. Dampen or cover areas affected by demolition operations as necessary to prevent dust nuisance.

L. The Contract Drawings and related documents may not represent all surface conditions at the site and adjoining areas. The known surface conditions are as indicated, and shall be compared with actual conditions before commencement of work.

M. Existing utilities and drainage systems below grade are located from existing documents and from surface facilities such as manholes, valve boxes, area drains, and other such surface fixtures.

N. If existing active services encountered are not indicated or otherwise made known to the Contractor and interfere with the permanent facilities under construction, notify the Engineer in writing, requesting instructions on their disposition. Take immediate steps to ensure that the service provided is not interrupted, and do not proceed with the work until written instructions are received from the Engineer.

O. Thicknesses of existing pavements are from previous construction documents, and do not imply the actual depth or thickness of the total pavement or base material, where it occurs. Remove pavement of whatever thickness as required.

PART 2 - PRODUCTS

2.01 MATERIALS, EQUIPMENT, AND FACILITIES

A. Furnish all materials, tools, equipment, devices, appurtenances, facilities, and services as required for performing the demolition and removal work.

PART 3 - EXECUTION

3.01 PRESERVATION OF REFERENCE MARKERS

A. Record the locations and designation of survey markers and monuments prior to their removal. Provide three reference points for each survey marker and monument removed, established by a licensed civil engineer or land surveyor currently registered in the State of California.

B. Store removed markers and monuments during demolition work, and replace them upon completion of the work. Re-establish survey markers and monuments in conformance with the recorded reference points. Forward to the Engineer a letter verifying re-establishment of survey markers and monuments, signed by a licensed civil engineer or land surveyor currently registered in the State of California.

3.02 DEMOLITION

A. Perform demolition in accordance with the approved Demolition Plan.

B. Operational procedures shall be in accordance with the approved Demolition Plan.

C. Demolish concrete and masonry in small sections. Perform demolition with small tools as much as possible. Blasting will not be permitted.

D. Cap or plug sanitary sewer in accordance with the utility District's standard details and instructions. Cap and plug pipe and other conduits abandoned due to demolition, with approved type caps and plugs as required by the utility Districts.

E. Backfill and compact depressions caused by excavations, demolition, and removal in accordance with the requirements of Section 31 20 00 - Earth Moving.

3.03 RESTORATION OF EXISTING STRUCTURES AND FACILITIES

A. All damage to existing structures and facilities, including utilities, which are to remain in place, shall be repaired to a condition equal to that existing prior to the beginning of demolition and removal operations. The cost of repairing existing structures and facilities damaged by the Contractor's operations shall be at the Contractor's expense.

3.04 CLEANUP

A. Provide a clean and orderly site.

END OF SECTION

SECTION 03 20 00

CONCRETE REINFORCEMENT AND EMBEDDED ASSEMBLIES

1. GENERAL

1.1 GENERAL

Work of this Section shall conform to requirements of Drawings and general provisions of the Contract, including General and Supplementary Conditions and Division 1 Specification sections.

1.2 SCOPE

Provide all labor, materials, equipment, services and transportation for reinforcing steel, accessories, embedments and miscellaneous anchorage accessories, joint fillers, and waterstops for cast-in-place concrete work as shown on Drawings, as specified herein, and as required by the job conditions.

1. All concrete shall include reinforcement. If reinforcement is not specifically indicated on the drawings, verify with the structural engineer before proceeding with work.

1.3 RELATED WORK SPECIFIED IN OTHER SECTIONS

Submittals	Division 1
Quality Control	Division 1
Structural Concrete	Section 03 30 01

1.4 CODES AND STANDARDS

A. Building Code: Concrete work shall conform to the requirements of the Building Code identified on the Structural General Notes, and OSHA requirements, except where more stringent conditions or criteria occur in the latest editions of the standards referenced below and on the drawings.

B. Standards:

1. ACI 117 – Standard Specifications for Tolerances for Concrete Construction and Materials.

2. ACI 301 – Standard Specification for Structural Concrete.

3. ACI 315 – Details and Detailing of Concrete Reinforcement.

4. ACI 318 – Building Code Requirements for Reinforced Concrete.

5. American Society for Testing and Materials "ASTM Standards in Building Codes", various standards as referenced herein, latest edition.

6. AWS D1.4 – Structural Welding Code-Reinforcing Steel.

7. Concrete Reinforcing Steel Institute ”Manual of Standard Practice”

PART 2 – PRODUCTS

A. Reinforcement shall conform to the following standards and material properties:

1. Deformed bars: ASTM A615, grade 60, uon

2. Weldable deformed bars: ASTM A706, grade 60.

3. Tie Wires and Spirals: ASTM A82.

4. Welding Electrodes: Mild steel covered arc-welding types conforming to AWS A5.1.

5. Welded bar anchors: nelson d2l deformed bar anchors ICC-ES report ER-5217

PART 3 – EXECUTION

1. Detail reinforcement based on the project requirements per ACI 318 and ACI 315, unless noted otherwise on drawings.

2. Where a 90-deg, 135 -deg or 180-deg hook is graphically indicated, provide corresponding ACI standard hooks.

3. Dowels shall match size and spacing of main reinforcement, unless noted otherwise on drawings.

4. Reinforcement shall have concrete protection (clear cover) per ACI 318.

5. Reinforcement shall be continuous typically. Lap reinforcement only as specifically detailed on the drawings and according to ACI 318.

6. Unless otherwise noted all lap splices are to be class "B" splices per ACI 318.

7. Provide mechanical splices for bars larger than #11 or where indicated.

8. Provide tensile, pre-qualified, welded or threaded mechanical splices unless noted otherwise on drawings.

9. Rebar shop drawings: submit shop drawings that clearly indicate all details, dimensions and information required for fabrication and placement of concrete reinforcement in accordance with contract documents, prepared in accordance with ACI 315 requirements.

10. Reinforcing steel shall not be permitted to rust where there is danger of staining exposed surfaces of adjacent concrete. The contractor shall replace stained concrete at his expense.

11. Reinforcement shall be free of form coatings, sealers, powdered and scale, rust, loose mill scale, earth, ice, and other materials that will reduce or destroy bond with concrete.

12. Place reinforcement in accordance with approved shop drawings, ACI 318, and CRSI recommended practice for “placing reinforcing bars”. Place reinforcement bars within tolerances specified in ACI 117 and ACI 318 section 7.5.

13. Position, support and secure reinforcement in a manner to prevent displacement before and during placement of concrete.

14. Welded joints of ASTM A706, grade 60 bars shall be made with low hydrogen weld filler metals classified as e80 electrodes with a minimum tensile strength of 80k.

END OF SECTION

SECTION 03 30 00

CAST-IN-PLACE CONCRETE

PART 1 - GENERAL

1.01 SECTION INCLUDES

A. Concrete Forms

1. Abutments
2. Foundations
3. Retaining walls

B. Concrete Reinforcing

1. Detailing
2. Bending
3. Placement
4. Amounts of cover for cast-in-place concrete
5. Anchor bolts
6. Dowels
7. Inserts
8. Lap Splices

C. Curing Compound and Sealer

1.02 RELATED SECTIONS

A. Section 03 10 00 - Concrete Formwork

1.03 REFERENCES

A.	ACI 304	Recommended Practice for Measuring, Mixing, Transporting and Placing Concrete
B.	ACI 305R	Hot Weather Concreting
C.	ACI 306R	Cold Weather Concreting
D.	ACI 308	Standard Specification for Curing Concrete
E.	ACI 309	Guide for Consolidation of Concrete

F.	ACI 315	Details and Detailing of Concrete Reinforcement
G.	ACI 318	Building Code Requirements for Reinforced Concrete and Commentary
H.	ASTM C33	Standard Specification for Concrete Aggregates
I.	ASTM C94	Standard Specification for Ready-Mixed Concrete
J.	ASTM C150	Standard Specification for Portland Cement
K.	ASTM C309	Standard Specification for Liquid Membrane-Forming Compounds for Curing Concrete
L.	ASTM C494	Standard Specification for Chemical Admixtures for Concrete
M.	ASTM A615	Standard Specification for Plain Billet-Steel Bars for Concrete Reinforcement
N.	ASTM C618	Standard Specification for Coal Fly Ash and Raw or Calcined Natural Pozzolan for Use as a Mineral Admixture in Portland Cement Concrete
O.	ASTM C979	Standard Specification for Integral Concrete Coloring System

P. California Code of Regulations (CCR):

CCR Title 8, Chapter 4, Subchapter 4 – Construction Safety Orders

CCR Title 24, Part 2, California Building Code, Chapter 33, Section 3303, Protection of Pedestrians during Construction or Demolition

1.04 SUBMITTALS

A. Product Data

1. Curing / Sealing Compounds
2. Admixtures
3. Source of Concrete and Aggregates

B. Shop Drawings

1. Reinforcing Diagrams
2. Bar Schedules

C. Curing

1. Curing Method

D. Test Reports

1. Mill Test Reports

   a. Reinforcing Steel

   b. Cement

2. Concrete Mix Designs

   Trial mixes including water-cement-fly ash ratio curves, concrete mix ingredients and proportions, and admixtures.

3. Grout Mix

   To include mix ingredients, strength and shrinkage data

E. Delivery

With each batch of concrete, furnish certified delivery tickets listing information in Paragraphs 13.1 and 13.2 of ASTM C94. Maximum delivery temperature of concrete is 100 degrees Fahrenheit (F). Minimum delivery temperature as follows:

	Atomospheric Temperature	**Minimum Concrete Temperature**	
	30 degrees to 40 degrees F	60 degrees F	
	0 degrees to 30 degrees F	70 degrees F	

PART 2 - PRODUCTS

2.01 MATERIALS

A. Portland Cement

Clean, fresh, Type II, low alkali, Portland cement conforming with ASTM C150.

B. Pozzolan Fly-ash to be in conformance with ASTM C618.

C. Aggregates

1. Aggregates to be uniformly graded with a one inch maximum size for all concrete mixes.

2. Natural aggregates to be free from deleterious materials, conforming to ASTM C33. Aggregate is not to be potentially reactive as defined in Appendix XI of ASTM C33. Aggregates to be thoroughly and uniformly washed before use.

D. Mixing Water

Fresh, clean, potable and free from oil, acid, alkali, organic matter or other deleterious substances.

E. Admixtures

Admixtures, if used to be of a type conforming to ASTM C494 that increases the workability of the concrete, will not impair the strength of the concrete, and is not used to reduce the cement content of the mix. Do not use Calcium Chloride.

F. Liquid Membrane-Forming Curing Compound

Is to be clear or translucent, suitable for spray application and is to conform to ASTM C309, Type 1.

G. Cement Grout

Non-shrink type composed of one part cement, two parts sand and the minimum amount of water necessary to obtain the desired consistency.

H. Properties

1. 28 day strength of concrete in place to be a minimum of:

   a. 3,000 psi for walls and abutments

   b. 2,500 psi for drilled piers

2. The maximum water/cement ratio to be 0.44 for bridge deck.

3. Slump of concrete and not to exceed four (4) inches unless otherwise authorized by District.

4. 15% of cement weight may be Pozzolan Fly-ash. Pozzolan Fly-Ash to be in conformance with ASTM C618.

2.02 REINFORCING STEEL

A. Bar reinforcement to be ASTM A615, Grade 60.

PART 3 – EXECUTION

3.01 FORMS

A. Reinforcing detailing, bending, and placing: In accordance with ACI 315 and ACI 318.

B. Reinforcing steel to be provided with the following amounts of cover for cast-in-place concrete:

1. Concrete deposited against earth - three inches

2. Concrete surface (formed) exposed to earth or weather:

   a. #6 through #18 bars - two inches

   b. #5 bar and smaller - 1-1/2 inches

C. All reinforcing steel, anchor bolts, dowels, and inserts to be accurately placed and securely held in place prior to placing of concrete or grout.

D. Horizontal bars to lap a minimum of 16 gauge black annealed wire chairs or concrete "dobies."

3.02 MIXING CONCRETE

A. All concrete materials to be measured accurately for each batch and mixed thoroughly until aggregate is coated with mortar. Combined ingredients to be mixed for a minimum of 1-1/2 minutes.

B. Concrete batching and mixing to comply with ACI 318 and ASTM C94, delivered to site. Batch mixing at the Site is not permitted.

3.03 PLACING CONCRETE

A. Preparation

1. Remove hardened concrete, wood chips, shavings and other debris from forms.

2. Remove hardened concrete and foreign materials from interior surfaces of mixing and conveying equipment.

3. Have reinforcement inspected and approved by District before depositing concrete.

4. Forms and reinforcing bars to be clean and wetted prior to placing of the concrete.

5. Place anchor bolts and other embedments, as indicated.

B. Conveying Concrete

Convey concrete from mixer to final place of deposit by a method that will prevent segregation. Method of conveying concrete is subject to approval of District.

C. Placing

1. Concrete to be placed in conformance with the recommendations of ACI 304.

2. Do not place concrete when weather conditions prevent proper placement and consolidation, or when concrete has attained its initial set, or has contained its water or cement content more than 1-1/2 hours.

3. Deposit concrete as near as practicable in its final position. Prevent splashing of forms or reinforcement with concrete in advance of placing concrete.

4. Do not drop concrete freely more than five feet. Where greater drops are required, use a tremie or flexible spout attached to a suitable hopper.

5. Discharge contents of tremies or flexible spouts in horizontal layers not exceeding 20 inches in thickness, and space tremies such as to provide a minimum of lateral movement of concrete.

6. Continuously place concrete until an entire unit between construction joints is placed. Rate and method of placing concrete to be such that no concrete between construction joints will be deposited upon or against partly set concrete.

7. Continuously place all concrete with no more than 10 minutes elapsed time between pours. Sequence concrete pours such that each pour is placed on or adjacent to concrete that has been in place no more than 10 minutes.

D. Consolidation

Conform to ACI 309. Immediately after depositing, spade concrete next to forms, into corners and recesses, work around reinforcement and into angles of forms, tamp lightly by hand, and compact with mechanical vibrator. Vibrate concrete to produce thorough compaction, leaving no voids, complete embedment of reinforcement and concrete of uniform and maximum density without segregation of mix. Do not transport concrete in forms by vibration. Carry on vibration continuously with placing of concrete. Do not insert vibrator into concrete that has begun to set.

3.04 HOT OR COLD WEATHER

A. Follow the recommendations of ACI 305R and ACI 306R for hot and cold weather conditions.

3.05 CONCRETE FINISHES

A. Finish of formed surfaces to be smooth and free of fins, honeycomb, or segregation. When defects occur, they are to be remedied by chipping cavities and patching, or by other methods approved by District.

B. Exposed surfaces to be “sacked” by rubbing cement mortar into voids with burlap or canvas. Fins to be ground smooth and loose mortar to be removed.

C. Vertical edges of the walls to have 3/4-inch chamfer.

D. Horizontal edges of the walls to have ½-inch chamfer.

E. Unformed surfaces to be steel troweled to a smooth dense finish. After the trowel finish has sufficiently hardened, walking surfaces of the entire surface to be given a medium broom finish perpendicular to the direction of travel. The broom finish to be applied just prior to the application of the curing compound/sealer.

3.06 PROTECTION AND CURING

A. In conformance with ACI 308, except as otherwise specified herein.

B. Initial curing to immediately follow the finishing operation. Protect exposed surfaces of concrete from premature drying, wash by rain and running water, wind, mechanical injury, and excessively hot or cold temperatures. Concrete not covered with membrane or other curing material to be kept continuously wet for at least seven days after placing. High-early-strength concrete net curing period to be not less than three days. Keep wood forms continuously wet to prevent moisture loss until forms are removed. Cure exposed concrete surfaces as described below. Other curing methods may be used if approved by District.

1. Liquid Curing and Sealing Compounds

   Apply by spray or roller in accordance with the manufacturer's instructions. Apply immediately after finishing. Maximum coverage to be 400 square feet per gallon on steel troweled surfaces, and 300 square feet per gallon on floated or broomed surfaces for the curing/sealing compound.

2. Plastic sheets

   Apply as soon as concrete has hardened sufficiently to prevent surface damage. Utilize widest practical width sheet and overlap adjacent sheets two inches. Tightly seal joints with tape.

3. Paper

   Utilize widest practical width paper and overlap adjacent sheets two inches. Tightly seal joints with sand, wood planks, pressure-sensitive tape, mastic or glue.

C. Provisions are to be made to keep overspray for curing/sealing compounds from extending beyond bridge deck surface. Spray of curing/sealing compounds to cease if sustained winds exceed 10 miles per hour.

3.07 CLEANING

A. Cleaning of equipment for delivery or placement of concrete is prohibited on site.

3.08 ACCEPTANCE

A. Walking surfaces are to be free from trowel marks, uniform in appearance and with a surface plane tolerance not exceeding 1/4 inches in any 10 foot 0 inch when tested with a ten foot straightedge.

END OF SECTION

SECTION 03 30 01

CAST-IN-PLACE CONCRETE

PART 1 - GENERAL

1.01 Provision of all cast-in-place concrete.

1.02 Standards:

A. ACI 117 – Standard Specifications for Tolerances for Concrete Construction and Materials.

B. ACI 318 – Building Code Requirements for Structural Concrete.

C. American Concrete Institute “Manual of Concrete Practice”, various committee reports as referenced herein.

PART 2 - PRODUCTS

2.01 Ready-mixed concrete ASTM C94. Compressive strength as follows:

A. Footings, grade beams, drilled piers f'_c = 3000 psi @ 56 days. 50% fly ash.

B. Slab on grade f'_c = 3000 psi @ 28 days.

2.02 Portland cement: ASTM C150, Type I, II or II/V.

2.03 Fly Ash: ASTM C618 Type F.

2.04 Aggregates:

A. Coarse: ASTM C33, normal weight concrete typical unless otherwise noted.

B. Fines: ASTM C33.

2.05 Water: Conforming to ASTM C94.

2.06 Water-Reducing Admixture: ASTM C494

2.07 Curing Materials:

A. Waterproof Paper: ASTM C171.

B. Sheet Plastic: Polyethylene, four mils thick.

C. Curing Compound: ASTM C309.

2.08 Grout: High Strength cementitious non-shrink grout.

2.09 Epoxy Adhesive: Two component material suitable for anchoring rebar into dry or damp concrete. Hilti HIT-HY 200 (ESR-3187), Hilti HIT-RE 500-SD (ESR -2322) or Simpson Set-XP (ESR -2508).

2.10 Slump: Concrete without high range water-reducing admixture to have a maximum slump of 8". Concrete for drilled piers: Slump 6" +/-1" maximum.

2.11 Conduct strength tests of concrete as follows:

A. Test concrete for required compressive strength in accordance with ACI 318 chapter 5.

B. Secure sample sets in accordance with ASTM C172. Mold and cure cylinders in accordance with ASTM C31.

C. Samples for each concrete design mix placed each day shall be taken not less than once a day, nor less than once for each 100 cu.yd. Of concrete, nor less than once for each 5000 square feet of surface area for slabs or walls.

D. Quantity of cylinders shall be at least two 6 inch diameter by 12 inch long cylinders or at least three 4 inch diameter by 8 inches long cylinders.

E. Transport specimen cylinders from job to laboratory after cylinders have cured for 24-hours on site.

F. Test cylinders in accordance with ASTM C 39.

PART 3 - EXECUTION

3.01 Place concrete in accordance with CBC Section 1905.

3.02 Mixing:

A. All concrete shall be ready-mixed conforming to ASTM C 94.

B. Methods of mixing shall comply with ACI 318 chapter 5.8.

3.03 Place concrete continuously without interruption between predetermined construction and contraction joints. Deposit and consolidate concrete slabs in a continuous operation, within limits of construction joints, until completing placement of a panel or section. Employ mechanical vibrating equipment in accordance with a ACI ci 309r as required to achieve thorough consolidation.

3.04 Comply with recommendations for concrete finishing established by ACI 302.1r and ACI 304r.

3.05 Comply with dimensional tolerance limitations given by ACI 117 except as modified in the construction documents.

3.06 Protect concrete from premature drying, excessive hot or cold temperature, and damage.

3.07 Concrete shall be kept continuously moist and above 50°f for seven days (ASTM c 150 type I cement) or for 10 days (ASTM C 150 type II cement). High early strength concrete usage shall be maintained over 50°f for three days.

3.08 Formwork:

A. Design of formwork and its removal is the contractor's responsibility.

B. Formwork shall conform to ACI's "recommended practice for concrete formwork" (ACI 347) and ACI 318 chapter 6.

C. Use plywood, fiberglass, metal, metal-framed plywood faced, or other acceptable panel-type materials to provide continuous, straight, smooth, exposed surfaces.

D. Provide forms for footings wherever concrete cannot be placed against solid earth excavation.

E. Remove loose dirt and debris from forms prior to concrete pours.

3.09 Comply with ACI 305, Hot Weather concreting when mean daily temperature rises above 75 degrees F.

3.10 Concrete shall be thoroughly consolidated. Use vibrators to as required.

3.11 Saw cut slab-on-grade control joints to a depth of ¼" of slab thickness. Joints to be spaced at 36 * slab thickness maximum. Architect to approve joint layout.

3.12 Patch and replace all defective concrete. Submit patching procedure for Architect's approval.

END OF SECTION

SECTION 05 12 00

STRUCTURAL STEEL

PART 1 - GENERAL

1. Structural steel as indicated on the Contract Drawings. Work includes:

   A. Structural steel framing.

   B. Anchor bolts and base plates.

   C. Shear connectors for composite construction.

   D. Shop painting.

2. Standards (Current Edition):

   A. American Institute of Steel Construction (ANSI/AISC 360-10) "Specification for Structural Steel Buildings"

   B. American Institute of Steel Construction (AISC 303-10), "Code of Standard Practice".

   C. American Welding Society, AWS D1.1-2010, "Structural Welding Code".

   D. Research Council on Structural Connections (RCSC) - "Specification for Structural Joints Using ASTM A325 or A490 Bolts".

   E. American Society for Testing and Materials "ASTM Standards in Building Codes", various standards as referenced herein, latest edition.

   F. The Society for Protective Coatings (formerly Steel Structures Painting Council, “SSPC”) "Steel Structures Painting Manual".

3. Submittals

      1. Shop Drawings and Erection Drawings (including Field Work drawings): Submit for approval required connection calculations, shop drawings and erection drawings for all structural steel indicated on the Contract Documents.

      2. Structural Steel Shop Drawings: Submitted shop drawings shall include layouts and details for each member showing the steel type and grade, size, connections, cuts, copes, holes, bolts, welds, surface treatments (cleaning, shop paint, etc.) and provisions for the connection of other work. Steel type, grade and size for all attached elements shall also be shown.

3. Shop and erection drawings shall contain complete dimensional and geometric information, based on established dimensions shown on Contract Documents, and shall not be scaled from Contract Documents. The shop drawings shall clearly distinguish between shop and field welds and bolts, identify pretensioned high strength bolts and identify surface preparation requirements at slip critical connections.

4. Welds: All welds shall be indicated by standard welding symbols in the "Standard Code for Arc and Gas Welding in Building Construction" or as accepted by the SER. Shop and erection drawings shall show the size, length, and type of each weld, including the electrode type to be used.

5. Bolts: Details for bolt assemblies shall indicate bolt size, length, type and the presence, type and location of washers where required as part of the assembly; distinguish between N and X bolts, distinguish between slip-critical and bearing bolts; and distinguish between shop and field bolts. Also, indicate bolt orientation where required by the Contract Documents.

6. Mill Reports: Submit for record certified copies of all mill reports, two (2) to the Design Professionals and one (1) to the Testing Agency, covering the chemical and physical properties of all structural steel and accessories (as defined in this Specification) for the project.

PART 2 - PRODUCTS

1. Steel Shapes, Bars, Rods, and Plates: ASTM A992, except angles and channels may be ASTM A36.

2. Bars and Plates: ASTM A572, Grade 50.

3. Steel Tubing: ASTM A500, Grade B.

4. Steel Pipe: ASTM A53, Grade B.

5. Standard Threaded Fasteners:

   A. Machine Bolts and Nuts: ASTM A307, Grade A.

   B. Plain Washers: ANSI B18.22.1.

   C. Beveled Washers: ANSI B18.23.1.

6. High Strength Bolts: ASTM A325.

7. Shear Connectors: Size as shown, conform to requirements of AWS D1.1.

8. Anchor Rods: ASTM F1554, Grade 36 and Grade 55.

9. Threaded Rods: ASTM A36.

10. Welding Electrodes: E70XX.

11. Shop Coatings

    A. Zinc Rich Primer: SSPC-Paint 20, Type I or Type II, Zinc rich primer utilizing either an organic or inorganic binder with a minimum zinc content of 80 percent by weight in the dry film. The primer shall provide a surface meeting AISC Slip Critical Class B (slip coefficient =0.50 min) requirements. Color to be determined by Architect. Primer shall be compatible with, and from the same manufacturer as, top coats specified in Division 9 specification.

    B. Galvanizing Repair Paint: ZRC Cold Galvanizing Compound, or other complying with SSPC-Paint 20.

PART 3 - EXECUTION

1. Erect structural steel in accordance with AISC Manual of Steel Construction and AWS D1.1 Structural Steel Welding Code, Section 8, Statically Loaded Structures.

2. Field modification of structural steel is prohibited without approval of Architect.

3. Installation of High Strength Bolts. Except where "snug tight" installation is specifically permitted on design Drawings, all high strength bolts shall be installed with full pretension using Turn-of-Nut Pretensioning, Twist-Off Type Tension Control Bolt Pretensioning or Direct-Tension-Indicator (DTI) Pretensioning in accordance with the "Specification for Structural Joints Using ASTM A325 or A490 Bolts". Calibrated Wrench Pretensioning shall only be used where specifically approved by the SER.

END OF SECTION

SECTION 05 30 00

STEEL DECK

PART 1 - GENERAL

1.1 GENERAL

Work of this Section shall conform to the requirements of Drawings and general provisions of the Contract, including General Conditions, Supplementary General Conditions and Division 1 Specification sections.

1.2 SCOPE

The work covered by this Section shall include all labor, material, equipment, permits, engineering and other services necessary for the installation of steel roof deck systems and related work with all attachments, flashings, metal closures, accessories and fittings as required for a complete installation in accordance with the Drawings and as specified herein.

1.3 RELATED WORK SPECIFIED IN OTHER SECTIONS:

Submittals	Division 1
Quality Control	Division 1
Structural Steel	Section 051200
Painting	Division 9

1.4 CODES AND STANDARDS

A. Building Code: Steel deck work shall conform to the requirements of the Building Code identified on the Structural General Notes, and OSHA requirements, except where more stringent conditions or criteria occur in the standards referenced below and on the Drawings.

B. Standards:

1. American Iron and Steel Institute (AISI) “Specification for the Design of Cold-Formed Steel Structural Members”, latest edition.
2. American Welding Society AWS D1.3 , “Structural Welding Code – Sheet Steel.”
3. American Society for Testing and Materials "ASTM Standards in Building Codes", various standards as referenced herein, latest edition.
4. Steel Deck Institute (SDI) “Design Manual for Composite Decks, Form Decks and Roof Decks”, latest edition.

1.5 SUBMITTALS

A. Required Submittals - Where the SUBMITTALS section of this Specification is in conflict with Division 1 Submittals, the more stringent requirements for the

Contractor apply. Required submittal items are listed here; see below for detailed requirements.

1. **Shop Drawings and Erection Drawings** (including Field Work Drawings): Submit for approval shop drawings and erection drawings for all steel deck indicated on the Contract Documents.

    a) Materials shall not be fabricated or delivered to the site before the shop drawings have been approved or approved as noted by the Design Professionals and returned to the Contractor.
    b) Shop Drawings shall clearly indicate:

        i. Deck types (profiles), steel gauges, and deck finishes.
        ii. Deck layout, including panel locations, number of deck spans per panel, structural support locations and joint locations.
        iii. Deck dimensions and sections keyed to layout plans, including side and end details and bearing requirements.
        iv. Deck fastener types (welds, screws, pins, proprietary systems) and layout patterns at panel sides, ends and interior supports.
        v. Details and locations of accessories including hardware, framing reinforcement anchorage, sump pans, cant strips, ridge plates, valley plates and closure plates. Show dimensioned location at edges of closure plates.
        vi. Fabrication necessary to incorporate steel deck into the job.
        vii. Correlation with other requirements, openings and flashings.
        viii. Contractor-coordinated openings for mechanical, electrical, plumbing, fire protection and other trades.

    c) The Contractor shall have reviewed and approved the shop drawings prior to submission to the Design Professionals for their review, representing that the Contractor has verified all quantities, dimensions, specified performance criteria, installation requirements, materials, catalog number and similar data with respect thereto and reviewed or coordinated each drawing and sample with the work of other trades and with the requirements of the project and the Contract Documents.

2. **Research or Evaluation Reports**: Submit for record research reports or evaluation reports of the model code organization acceptable to authorities having jurisdiction that evidence steel deck's compliance with the building code in effect for the Project.

1.6 COORDINATION AND TEMPORARY SUPPORT

A. General Contractor shall coordinate with Steel Deck Contractor regarding any construction loads on deck before concreting, and on completed deck in excess

of the design loads shown. Such conditions may include both gravity and lateral loads.

PART 2 - PRODUCTS

2.1 GENERAL

The work specified herein is based on the products of Verco Manufacturing Co. and ASC Profiles, Inc., in order to establish design quality and function in the installed work. Products of other manufacturers shall be subject to the approval of the Design Professionals. All steel deck units shall be of the same depth and profile as shown on the Drawings and the product of one manufacturer.

2.2 MATERIALS

A. Prime Painted Cold Rolled Steel Sheet for deck and accessories: ASTM A1008 SS Grade 33 (minimum) with minimum yield strength of 33ksi (230MPa). Exposed surface (typically bottom) to have oven cured gray or white lead- and chromate-free rust-inhibitive primer to 0.3 mil nominal dry film thickness.

B. Galvanized Steel: steel deck and all closures and flashings shall be formed from steel sheets conforming to ASTM A653, Structural Quality Grade 33 (minimum) with minimum yield strength of 33 ksi (230MPa). Before forming, the steel sheet shall be coated with a zinc coating conforming to ASTM A653 G90.

C. All steel decking shall be roll formed for uniformity in dimension and strength.

2.3 ACCESSORIES

A. General: Provide accessory materials for steel deck that comply with requirements indicated and recommendations of the steel deck manufacturer.

B. Hanger Tabs: Manufacturer's standard UL rated piercing steel sheet hanger attachment devices for floor deck panels.

C. Miscellaneous Roof Deck Accessories: Steel sheet ridge and valley plates, finish strips, and reinforcing channels, of same material and thickness as roof deck unless otherwise indicated.

D. Steel Sheet Accessories: ASTM A 653, galvanized to G 90 coating class.

E. Galvanizing Repair Paint: SSPC Paint 20 or MIL-P-21035, with dry film containing a minimum of 94% zinc dust by weight.

2.4 MISCELLANEOUS MATERIALS

A. Arc-Welding Electrodes: AWS A5.1 E60XX or E70XX Series, as required for the conditions of use.

B. Touch Up Paint: use galvanized repair paint specified above.

PART 3 - EXECUTION

3.1 ERECTION – PLACEMENT

A. Erect steel deck in accordance with the decking manufacturer's recommendations and the requirements of the Drawings and these Specifications.

B. Place steel deck on the supporting framework and adjust to final position with ends accurately aligned and bearing on supporting members before making permanent connections. Do not stretch or contract sidelap interlocks. Provide in lengths to be continuous for not less than three spans and to rest on minimum of four supports where structural steel framing permits.

C. Place deck units flat, square, without warping or excessive deflections, in straight alignment for entire length of run of cells and align within ¼ inch between the cells at ends of abutting units. Install with ribs at right angles to supporting members where possible.

D. Abutting ends of deck panels shall occur over supports. End bearing shall be a minimum of 2 inches (50mm), or greater if required (web crippling) by deck manufacturer and the requirements of the drawings and these specifications.

E. Where deck panels nest, laps shall be a minimum of 2" (50mm) and shall occur over supports. Nesting is permitted only where profiles are designed to nest and are fabricated with offset ends.

3.2 ERECTION - CONNECTIONS

A. Connect steel deck to the steel framework at ends of units and at intermediate supports as shown on the Contract Documents and approved shop drawings.

B. Deck to support welds shall be puddle welds of diameter and spacing shown on Contract Documents and/or approved shop drawings.

C. Fasten side laps and perimeter edges of panels between supports by button punching, side seam welding or screws, or as noted on Construction Drawings.

3.3 ERECTION – OPENINGS AND CLOSURES

A. Contractor to coordinate location of all openings with other trades (see Submittals).

B. Provide miscellaneous headers and other steel reinforcing and supports welded to decking and structural steel as required at penetrations, around columns, etc. per typical details and manufacturer's recommendations.

C. Field cutting parallel to flutes shall be done in the low flutes, taking care to leave sufficient horizontal material to permit satisfactory welding of deck to supporting steel.

D. Openings required for work of other trades and not indicated on Architectural, Structural, Mechanical / Electrical / Plumbing / Fire Protection / Telecom Drawings shall be permitted only upon approval of the Design Professionals as to size and location.

3.4 WELDING

A. Welding of steel deck shall follow the technique outlined by the steel deck manufacturer.

3.5 TOUCH-UP

A. After installation touch-up welds on galvanized decking with specified galvanized repair paint to a dry film thickness of 2 mils.

B. Touch-Up Painting: Where exposed to view, wire brush, clean, and paint scarred areas, welds, and rust spots on both surfaces of installed deck panels.

1. Touch up painted surfaces with same type of shop paint used on adjacent surfaces.
2. Where shop-painted surfaces are exposed in-service, apply touch-up paint to blend into adjacent surfaces.

END OF SECTION

SECTION 07 62 00
SHEET METAL FLASHING AND TRIM

PART 1 GENERAL

1.01 SECTION INCLUDES

A. Fabricated sheet metal items, including flashings, gutters, and downspouts.

B. Sealants for joints within sheet metal fabrications.

C. Concrete splash blocks.

1.02 RELATED REQUIREMENTS

A. Section 09 91 13 - Exterior Painting: Field finish for gutters, hangers and downspouts.

1.03 REFERENCE STANDARDS

A. ASTM A653/A653M - Standard Specification for Steel Sheet, Zinc-Coated (Galvanized) or Zinc-Iron Alloy-Coated (Galvannealed) by the Hot-Dip Process; 2015.

B. ASTM C920 - Standard Specification for Elastomeric Joint Sealants; 2014a.

C. ASTM D4586/D4586M - Standard Specification for Asphalt Roof Cement, Asbestos-Free; 2007 (Reapproved 2012).

D. CDA A4050 - Copper in Architecture - Handbook; current edition.

E. SMACNA (ASMM) - Architectural Sheet Metal Manual; 2012.

1.04 SUBMITTALS

A. See Section 01 30 00 - Administrative Requirements, for submittal procedures.

B. Shop Drawings: Indicate material profile, jointing pattern, jointing details, fastening methods, flashings, terminations, and installation details.

1.05 QUALITY ASSURANCE

A. Perform work in accordance with SMACNA (ASMM) and CDA A4050 requirements and standard details, except as otherwise indicated.

1.06 DELIVERY, STORAGE, AND HANDLING

A. Stack material to prevent twisting, bending, and abrasion, and to provide ventilation. Slope metal sheets to ensure drainage.

B. Prevent contact with materials that could cause discoloration or staining.

PART 2 PRODUCTS

2.01 SHEET MATERIALS

A. Galvanized Steel: ASTM A653/A653M, with G90/Z275 zinc coating; minimum 24 gage, (0.0239 inch) thick base metal.

2.02 FABRICATION

A. Form sections true to shape, accurate in size, square, and free from distortion or defects.

B. Form pieces in longest possible lengths.

C. Hem exposed edges on underside 1/2 inch; miter and seam corners.

D. Form material with flat lock seams, except where otherwise indicated; at moving joints, use sealed lapped, bayonet-type or interlocking hooked seams.

E. Fabricate corners from one piece with minimum 18 inch long legs; seam for rigidity, seal with sealant.

2.03 GUTTER AND DOWNSPOUT FABRICATION

A. Gutters: SMACNA (ASMM), Half-found profile as shown on drawings.

B. Downspouts: Rectangular profile, 4" width.

C. Seal metal joints.

2.04 ACCESSORIES

A. Gutter Guard: Guttersupply.com: Steel hinged gutter guard SCKH6S with stainless steel clips.

B. Fasteners: Galvanized steel, with soft neoprene washers.

C. Primer: Zinc chromate type.

D. Concealed Sealants: Non-curing butyl sealant.

E. Exposed Sealants: ASTM C920; elastomeric sealant, with minimum movement capability as recommended by manufacturer for substrates to be sealed; color to match adjacent material.

F. Plastic Cement: ASTM D4586/D4586M, Type I.

PART 3 EXECUTION

3.01 INSTALLATION

A. Secure flashings in place using concealed fasteners.

B. Apply plastic cement compound between metal flashings and felt flashings.

C. Fit flashings tight in place; make corners square, surfaces true and straight in planes, and lines accurate to profiles.

D. Secure gutters and downspouts in place with concealed fasteners.

E. Slope gutters 1/4 inch per 10 feet, minimum.

F. At downspouts that let out into landscape, provide 2’-0” long concrete splash block to direct water away from building face.

END OF SECTION

SECTION 09 91 13
Exterior Painting

PART 1 - 1. GENERAL

1.1 RELATED DOCUMENTS

A. Drawings and general provisions of the Contract, including General and Supplementary Conditions and Division 01 Specification Sections, apply to this Section.

1.2 SUMMARY

A. Section includes surface preparation and the application of paint systems on the following exterior substrates:

B.
1. Steel.
2. Galvanized metal.
3. Aluminum (not anodized or otherwise coated).

C. Related Requirements:

1. Section 051200 "Structural Steel Framing" for shop priming of metal substrates with primers specified in this Section.

1.3 DEFINITIONS

A. Gloss Level 1: Not more than 5 units at 60 degrees and 10 units at 85 degrees, according to ASTM D 523.

B. Gloss Level 3: 10 to 25 units at 60 degrees and 10 to 35 units at 85 degrees, according to ASTM D 523.

C. Gloss Level 4: 20 to 35 units at 60 degrees and not less than 35 units at 85 degrees, according to ASTM D 523.

D. Gloss Level 5: 35 to 70 units at 60 degrees, according to ASTM D 523.

E. Gloss Level 6: 70 to 85 units at 60 degrees, according to ASTM D 523.

F. Gloss Level 7: More than 85 units at 60 degrees, according to ASTM D 523.

1.4 ACTION SUBMITTALS

A. Product Data: For each type of product. Include preparation requirements and application instructions.

B. Samples for Initial Selection: For each type of topcoat product.

C. Samples for Verification: For each type of paint system and each color and gloss of topcoat.

1. Submit Samples on rigid backing, 8 inches square.
2. Step coats on Samples to show each coat required for system.
3. Label each coat of each Sample.
4. Label each Sample for location and application area.

D. Product List: For each product indicated, include the following:

1. Cross-reference to paint system and locations of application areas. Use same designations indicated on Drawings and in schedules.
2. Printout of current "MPI Approved Products List" for each product category specified, with the proposed product highlighted.
3. VOC content.

1.5 MAINTENANCE MATERIAL SUBMITTALS

A. Furnish extra materials, from the same product run, that match products installed and that are packaged with protective covering for storage and identified with labels describing contents.

1. Paint: 10 percent, but not less than 1 gal. of each material and color applied.

1.6 QUALITY ASSURANCE

A. Mockups: Apply mockups of each paint system indicated and each color and finish selected to verify preliminary selections made under Sample submittals and to demonstrate aesthetic effects and set quality standards for materials and execution.

1. Architect will select one surface to represent surfaces and conditions for application of each paint system specified in Part 3.

a. Vertical and Horizontal Surfaces: Provide samples of at least 100 sq. ft.
b. Other Items: Architect will designate items or areas required.

2. Final approval of color selections will be based on mockups.

a. If preliminary color selections are not approved, apply additional mockups of additional colors selected by Architect at no added cost to Owner.

3. Approval of mockups does not constitute approval of deviations from the Contract Documents contained in mockups unless Architect specifically approves such deviations in writing.
4. Subject to compliance with requirements, approved mockups may become part of the completed Work if undisturbed at time of Substantial Completion.

1.7 DELIVERY, STORAGE, AND HANDLING

A. Store materials not in use in tightly covered containers in well-ventilated areas with ambient temperatures continuously maintained at not less than 45 deg F

1. Maintain containers in clean condition, free of foreign materials and residue.
2. Remove rags and waste from storage areas daily.

1.8 FIELD CONDITIONS

A. Apply paints only when temperature of surfaces to be painted and ambient air temperatures are between 50 and 95 deg F

B. Do not apply paints in snow, rain, fog, or mist; when relative humidity exceeds 85 percent; at temperatures less than 5 deg F above the dew point; or to damp or wet surfaces.

PART 2 - PRODUCTS

2.1 MANUFACTURERS

A. Manufacturers: Subject to compliance with requirements, provide products by the following provide products by one of the following:
   1. Benjamin Moore & Co.
   2. Dunn-Edwards
   3. ICI Paints
   4. Kelly-Moore Paints.
   5. Sherwin-Williams Company (The)

B. Products: Subject to compliance with requirements, provide product listed in other Part 2 articles for the paint category indicated.

2.2 PAINT, GENERAL

A. MPI Standards: Provide products that comply with MPI standards indicated and that are listed in its "MPI Approved Products List."

B. Material Compatibility:

   1. Provide materials for use within each paint system that are compatible with one another and substrates indicated, under conditions of service and application as demonstrated by manufacturer, based on testing and field experience.
   2. For each coat in a paint system, provide products recommended in writing by manufacturers of topcoat for use in paint system and on substrate indicated.

C. VOC Content: Provide materials that comply with VOC limits of authorities having jurisdiction.

D. Colors: As indicated in plans.

2.3 METAL PRIMERS

A. Primer, Alkyd, Anti-Corrosive for Metal:

   1. 100% Acrylic

   2. 22% Alkyd resin by volume

   3. Minimum 41% Solids by volume

   4. Minimum 5% Rust inhibitive pigment by volume

2.4 WATER-BASED PAINTS

A. Latex, Exterior Low Sheen (Gloss Level 4):

1. 100% Acrylic

2. Minimum 39% Solids by volume.

3. Minimum 21% Pigment by Volume

2.5 EXAMINATION

A. Examine substrates and conditions, with Applicator present, for compliance with requirements for maximum moisture content and other conditions affecting performance of the Work.

B. Portland Cement Plaster Substrates: Verify that plaster is fully cured.

C. Exterior Gypsum Board Substrates: Verify that finishing compound is sanded smooth.

D. Verify suitability of substrates, including surface conditions and compatibility with existing finishes and primers.

E. Proceed with coating application only after unsatisfactory conditions have been corrected.

1. Application of coating indicates acceptance of surfaces and conditions.

2.6 PREPARATION

A. Comply with manufacturer's written instructions and recommendations in "MPI Manual" applicable to substrates and paint systems indicated.

B. Remove hardware, covers, plates, and similar items already in place that are removable and are not to be painted. If removal is impractical or impossible because of size or weight of item, provide surface-applied protection before surface preparation and painting.

1. After completing painting operations, use workers skilled in the trades involved to reinstall items that were removed. Remove surface-applied protection.

C. Clean substrates of substances that could impair bond of paints, including dust, dirt, oil, grease, and incompatible paints and encapsulants.

1. Remove incompatible primers and reprime substrate with compatible primers or apply tie coat as required to produce paint systems indicated.

D. Steel Substrates: Remove rust, loose mill scale, and shop primer if any. Clean using methods recommended in writing by paint manufacturer

1. SSPC-SP 2, "Hand Tool Cleaning."
2. SSPC-SP 3, "Power Tool Cleaning."
3. SSPC-SP 7/NACE No. 4, "Brush-off Blast Cleaning."
4. SSPC-SP 11, "Power Tool Cleaning to Bare Metal."

E. Shop-Primed Steel Substrates: Clean field welds, bolted connections, and abraded areas of shop paint, and paint exposed areas with the same material as used for shop priming to comply with SSPC-PA 1 for touching up shop-primed surfaces.

2.7 APPLICATION

A. Apply paints according to manufacturer's written instructions and recommendations in "MPI Manual."

1. Use applicators and techniques suited for paint and substrate indicated.
2. Paint surfaces behind movable items same as similar exposed surfaces. Before final installation, paint surfaces behind permanently fixed items with prime coat only.
3. Paint both sides and edges of exterior doors and entire exposed surface of exterior door frames.
4. Paint entire exposed surface of window frames and sashes.
5. Do not paint over labels of independent testing agencies or equipment name, identification, performance rating, or nomenclature plates.
6. Primers specified in painting schedules may be omitted on items that are factory primed or factory finished if acceptable to topcoat manufacturers.

B. Tint undercoats same color as topcoat, but tint each undercoat a lighter shade to facilitate identification of each coat if multiple coats of same material are to be applied. Provide sufficient difference in shade of undercoats to distinguish each separate coat.

C. If undercoats or other conditions show through topcoat, apply additional coats until cured film has a uniform paint finish, color, and appearance.

D. Apply paints to produce surface films without cloudiness, spotting, holidays, laps, brush marks, roller tracking, runs, sags, ropiness, or other surface imperfections. Cut in sharp lines and color breaks.

2.8 FIELD QUALITY CONTROL

A. Dry Film Thickness Testing: Owner may engage the services of a qualified testing and inspecting agency to inspect and test paint for dry film thickness.

1. Contractor shall touch up and restore painted surfaces damaged by testing.
2. If test results show that dry film thickness of applied paint does not comply with paint manufacturer's written recommendations, Contractor shall pay for testing and apply additional coats as needed to provide dry film thickness that complies with paint manufacturer's written recommendations.

2.9 CLEANING AND PROTECTION

A. At end of each workday, remove rubbish, empty cans, rags, and other discarded materials from Project site.

B. After completing paint application, clean spattered surfaces. Remove spattered paints by washing, scraping, or other methods. Do not scratch or damage adjacent finished surfaces.

C. Protect work of other trades against damage from paint application. Correct damage to work of other trades by cleaning, repairing, replacing, and refinishing, as approved by Architect, and leave in an undamaged condition.

D. At completion of construction activities of other trades, touch up and restore damaged or defaced painted surfaces.

2.10 EXTERIOR PAINTING SCHEDULE

A. Steel Substrates:

1. Acrylic System:

a. Prime Coat: Primer, acrylic, anticorrosive for metal.
b. Prime Coat: Shop primer specified in Section 05 12 00 - "Structural Steel" where substrate is specified.
c. Intermediate Coat: Exterior acrylic enamel matching topcoat.
d. Topcoat: Acrylic, exterior, semi-gloss (Gloss Level 5).

END OF SECTION

SECTION 22 05 00
PLUMBING AND UTILITIES

PART 1 - GENERAL

1.01 DESCRIPTION OF WORK:

A. The requirements of the general conditions and Division 1 apply to all work hereunder; also, applicable provisions of Section 23 05 00 Mechanical Work - General Requirements.

B. Furnish and install all plumbing work indicated on the Drawings and described herein. Also, any incidental work not shown or specified necessary to provide the complete system.

1.02 SERVICES:

A. Make all arrangements for the utilities required. Pay all costs involved in obtaining the services, including gas service and meter, water meter and access box, street work, in lieu fees for sewer, etc.

B. Verify the location of all services. No extra cost shall be allowed if services are not as shown.

C. Determine storm and sanitary sewer elevation at point of connection before installing any sewer piping. Notify Architect immediately if indicated grades cannot be maintained.

1.03 RECORD DRAWINGS:

A print of the plumbing plan showing underground piping will be furnished by the Contractor on which he shall indicate the locations of the underground installations as the work progresses. This shall be returned to Architect at completion of job.

PART 2 - PRODUCTS

2.01 CLEANOUTS:

A. Cleanouts shall be "T" or "Y" branches or trap hubs of same material as pipe in which they are placed. Cleanouts in cast iron lines shall have cast iron bodies with brass plugs. Cleanouts in floors and sidewalks shall be Josam 56010 or 56030 for ceramic tile floors with nickel bronze covers. Cleanouts in vertical lines shall be Josam 58710. Furnish cleanouts at ends of branch lines, at the base of vertical lines, at changes in direction and where shown or required to facilitate cleaning, a maximum spacing of 50' inside buildings, 100' outside, also in waste drop from each sink and urinal. Cleanout to grade shall be set in 14" x 14" x 5" deep concrete pad; trowel smooth and edge; set flush with finished grade. Cleanouts to be full size of line up to a maximum of 4". Cleanouts shall clear all obstructions by 18" minimum. Furnish to Owner one wrench for each size

and type of cleanout used. Permanently identify exterior cleanouts: SS for sanitary sewer, SD for storm drain.

2.02 PIPE AND FITTINGS INSIDE BUILDING:

A. See General Requirements, Section 23 05 00, for dielectric fittings and pipe protection. Terminate 5'-0" outside the building line or where marked.

B. Soil, Storm, Waste and Vent Pipe underground and to 6" above ground: Service weight cast iron soil pipe and fittings, asphaltic coated, conforming to Cast Iron Soil Pipe Institute Standard #301 ASTM A-888 or ASTM A-74 and so stamped. Joints shall be No-Hub conforming to Cast Iron Soil Pipe Institute Standard #310; Ty-Seal or equal with gaskets conforming to ASTM C 564 and ASTM A74. Suspended pipe with No-Hub joints shall have a swaybrace at 20'-0" maximum spacing.

C. Waste and Vent Pipe above ground from lavatories or sinks, rainwater leaders and overflows above the floor: Cast iron soil pipe and fittings with no hub joints conforming to the requirements of CISPI Standard 301, ASTM A-888 or ASTM A-74 for all pipe and fittings. Joints shall conform to CISPI 310 and shall be hubless couplings composed of stainless steel shield, clamp assembly and elastomeric sealing sleeve. DWV drainage tubing and fittings is acceptable when approved. Condensate drains shall be Type L hard copper, with long sweep elbows and cleanout tees at each change in direction. Connect condensate drains to air conditioning units with P-trap and run to an approved receptor and dry well. Provide vibration eliminators at A.C. units.

D. Water Pipe (Hot and Cold Water): Type L copper tubing, hard temper, with wrought copper fittings. Capped or plugged outlets shall be Schedule 40 screwed brass. Provide full solder cup fittings.

E. Gas Pipe: Schedule 40 black steel with malleable iron screwed fittings above grade; welded below grade with Class 150 welding fittings. Connect to each item of gas-fired equipment with drip leg and valve. Provide flex connection in approved sizes where applicable.

2.03 PIPE AND FITTINGS OUTSIDE BUILDINGS:

A. See General Requirements Section for dielectric fittings and pipe corrosive protection. Connect to building services where terminated 5' outside footing line.

B. Sanitary and Storm Drain Pipe: First quality, extra strength, bell and spigot clay sewer pipe ASTM #C-700-789 with fittings conforming to ASTM C425-T, J-M PVC sewer pipe and fittings with Ring-Tite joints, ASTM D3034 SDR 35, or service weight cast iron where marked.

C. Water Pipe in ground 2" and Larger: Schedule 40 galvanized steel. Fittings shall be threaded galvanized malleable iron to sizes 4" and smaller. J-M Ring-Tite PVC, or equal, conforming to ASTM D2241-SDR21, Class 200 with Ring-Tite fittings or ductile iron mechanical joint couplings may be used below ground as allowed by local codes or Type K copper with wrought copper fittings at the Contractors option. Sizes 1-1/2" and smaller shall be Type K copper tubing, hard temper, with wrought copper fittings.

D. Water Service Piping Above Grade: Class 150 bell and spigot ductile cast iron water pipe conforming to ANSI A21.6. Pipe shall be lined with a factory-applied 1/16" thick cement lining with smooth dense finish. Fittings shall conform to ANSI Specification A21-10-1952, Class 250 pattern. Fittings shall be lined. Provide concrete thrust block at each change of direction.

E. Gas Piping Aboveground to 18" Below Ground: Schedule 40 black steel with beveled ends for welding, with Class 150 welding fittings. Mitering to form elbows or tees will not be permitted, where branch tee connections of welded piping are required Bonney "Weldolet" fittings may be used, if the branch is one-half of the diameter of the main or less. Provide gas service shut-off valve on downstream side of meter and at entry to each building conspicuously marked "GAS" with sign.

F. Gas Piping Underground: PLEXCO PE2406 polyethylene gas distribution pipe ASTM D2513 and ASTM D2683 fittings with fusion welded joints. Pipe shall be labeled for NATURAL GAS in accordance with CPC.

At transition between polyethylene and steel piping below grade, provide Central Plastics Company, or equal, Double "O" seal transition fittings. Provide minimum of 30 inches of horizontal steel pipe at all connections to above ground piping.

2.04 FIXTURES AND TRIM:

A. Designations are American Standard unless noted. Kohler, Eljer, are acceptable if equal in utility, quality and appearance.

B. Concealed stops shall be 1/2" Speedway SSR44, lock shield valves. 3/4" stops shall be Dick Bros. #3150-LK. Exposed stops and supplies shall be 1/2" Speedway #S3712A for LAVS, S3712DL for water closets with IPS inlet, lock shield, loose key.

C. Hose Bibb: 3/4" Acorn #8121 interior, 8136 exterior wall mount, mounted 18" above finished grade or floor, C.P. cast bronze, lock shield, loose key. Exterior box mounted Acorn 8151 with locking door, Acorn 8126 for planters and roof areas, hot and cold water type Acorn 8156.

D. Trap Primers: E & S Primer valve, connect as recommended by manufacturer. Mount in J.R. Smith 4740 wall box with locking cover.

E. Fixtures: See drawings for fixtures.

PART 3 - EXECUTION

3.01 SERVICES:

A. Make all arrangements for the utilities required. Pay all costs involved in obtaining the services including gas service and meter, water meter, pressure reducing valve, access boxes, street work.

B. Verify the location of all services. No extra cost shall be allowed if services are not as shown.

C. Determine storm and sanitary sewer elevation at point of connection before installing any sewer piping. Notify Architect immediately if indicated grades cannot be maintained.

3.02 RECORD DRAWINGS:

A. A print of the plumbing plan showing underground piping will be furnished to the Contractor on which he shall indicate the locations of the underground installations as the work progresses. This shall be returned to the Architect at completion of job.

3.03 DISINFECTION:

A. Clean and disinfect all hot and cold water systems connected to domestic water systems in accordance with AWWA Standard C651 and as required by the local building and health department codes. This procedure shall be performed by a water treatment company that has a current Cal-EPA license to apply disinfectant chlorine in potable water.

B. Preliminary Preparation: Provide a 1" service cock or valve connected to system at a point within 2'-0" of its junction with water supply line and inject disinfecting agent into system through this cock. When project is complete, with all fixtures connected and operable and ready for use and when, by test, system is proved to be free from leaks, it shall be thoroughly flushed by fully opening every outlet and operating every fixture until clear water flows from all of them.

C. Disinfecting Agent: The chlorine shall be a registered product with Cal-EPA for use in California in potable water lines, such as Bacticide, Cal-EPA Registration No. 37982-20001.

D. Disinfecting Procedure: Connect a hand operated pump, 100 psi rating, minimum to the 1" service cock or valve.

1. With system completely full of water and supply valve open, adjust every faucet of system so that a trickle of water flows from each.

2. Inject disinfectant until an orthotolidin test at each outlet shows a chlorine residual concentration of at least 50 parts per million (p.p.m.).

3. Close all outlets and valves, including valve connecting to water supply line and 1" service cock on solution injection connection. Maintain condition for 24 hours and chlorine residual of 50 p.p.m. should be retained in system for this 24 hour period. If, after 24 hours, orthotolidin tests indicate that chlorine residual concentration has decreased below 50 p.p.m. then disinfection procedure must be repeated until an approved result is obtained.

4. When the above procedure has been completed, flush out entire system with fresh water until an orthotolidin test at any outlet shows a residual of not more than 0.5 p.p.m.

5. Warning signs shall be provided at all outlets while chlorinating the system.

3.04 PIPING CONNECTION:

A. Minimum grade on drain, vent, and waste piping shall be 1/4" per foot unless noted, or later approved. Vent piping shall be graded to a soil or waste line.

B. Connections from stacks or horizontal wastes to wall or floor finish for wastes from lavatories, urinals, sinks, and drinking fountains and connection between floor drains and traps shall be IPS 85% red brass pipe.

C. Special Equipment:

1. Certain items of equipment will be furnished and set in place under a separate section of specifications; furnish all services and sink fittings and waste trap if required.

2. Make cold and hot water, drain, vent, and other required connections to all the equipment. Each water connection shall have a valve and union in the line, unless noted otherwise.

3. Sizes and locations of connection to special equipment are shown for equipment made by certain manufacturers. Secure rough-in data from the manufacturer for the equipment to be installed and rough-in accordingly. Final connections shall conform to the manufacturer's directions for the equipment furnished at not extra cost to the Owner.

D. Trap Primers: Provide a trap primer for each indirect waste receptacle not receiving discharge from a plumbing fixture.

3.05 CLEANOUTS:

A. Furnish cleanouts at ends of branch lines, at the base of vertical lines, at changes in direction and where shown or required to facilitate cleaning, a maximum spacing of 50 feet inside buildings, 100 feet outside, also in waste drop from each sink. Cleanout to grade shall be set in a 14" x 14" x 5" deep concrete pad, trowel smooth and edge, set flush with finished grade. Cleanouts to be full size of line up to a maximum of 6". Cleanouts shall clear all obstructions by 18" minimum. Furnish to Owner one wrench for

each size and type of cleanout used. Permanently identify cleanouts: SS for sanitary sewer.

3.06 FIXTURES AND TRIM:

A. Install all fixtures at locations shown on architectural drawings. Provide proper backing for hanging brackets and hold down screws 2 x 6 blocking secured with U.J.H. clips or carriers as specified. Grout voids between all fixtures and adjacent surfaces with clear Dow Silicon Sealant. Install hold down screws and wall hung lavatories.

B. All exposed piping, bibbs, stops, faucets, traps, flush valves and other trim for all fixtures shall be chrome plated including piping inside sink cabinets. Provide Hudee rim for all counter type sinks and lavatories. Enameled ware shall be cast iron with acid resisting enamel.

C. Provide 85% or IPS red brass pipe, securely anchored to building construction, for each connection to faucets, flush valves, stops, hose bibbs, etc. Each fixture except hose bibbs, shall have a stop valve installed on water supply lines to permit repairs without shutting off water mains.

D. Installation for handicap accessible fixtures shall conform to Chapter 16 California Plumbing Code, Section 1115 B California Building Code, and ADA requirements.

E. Gas piping below covered walks and where noted on Drawings shall be installed in watertight Schedule 40 PVC conduit. Conduit shall be vented where noted.

F. Provide Christy, Brooks, or equal, concrete pit, with size as noted on Drawings, or as required, for water meter and detector check valve.

G. Provide shut off valve and seismic gas valve on each building.

END OF SECTION

SECTION 26 00 10

BASIC ELECTRICAL REQUIREMENTS

PART 1 - GENERAL

1.01 SUMMARY

A. Table of Contents, Division 26 - Electrical:

SECTION NO.	SECTION TITLE
260010	BASIC ELECTRICAL REQUIREMENTS
260519	BUILDING WIRE AND CABLE
260526	GROUNDING AND BONDING
260531	CONDUIT
260533	BOXES
260543	UNDERGROUND DUCTS AND STRUCTURES
260553	ELECTRICAL IDENTIFICATION
265600	EXTERIOR LIGHTING

B. Work included: This Section includes general administrative and procedural requirements for Division 26. The following administrative and procedural requirements are included in this Section to supplement the requirements specified in Division 01.
   1. Quality assurance.
   2. Definition of terms.
   3. Submittals.
   4. Coordination.
   5. Record documents.
   6. Operation and maintenance manuals.
   7. Project management and coordination services.
   8. Excavation.
   9. Rough-in.
   10. Electrical installation.
   11. Cutting, patching, painting and sealing.
   12. Field quality control.
   13. Cleaning.
   14. Project closeout.

C. Related Work: Consult all other Sections, determine the extent and character of related Work and properly coordinate Work specified herein with that specified elsewhere to produce a complete and operable installation.
   1. General and supplementary conditions: Drawings and general provisions of Contract and Division 01 of the Specifications, apply to all Division 26 Sections.
   2. Earthwork: Include trenching, backfilling, boring and soil compaction as required for the installation of underground conduit, in-grade pull boxes, vaults, lighting pole foundations, etc. Refer to Division 31, Earthwork.
   3. Concrete Work: Include forming, steel bar reinforcing, cast-in- place concrete, finishing and grouting as required for underground conduit encasement, light pole foundations, pull box slabs, vaults, housekeeping pads, etc. Refer to Division 03, Concrete.
   4. Miscellaneous metal Work: Include fittings, brackets, backing, supports, rods, welding and pipe as required for support and bracing of raceways, lighting fixtures, panelboards, distribution boards, switchboards, motor control centers, etc. Refer to Division 05, Miscellaneous Metals.
   5. Miscellaneous lumber and framing Work: Include wood grounds, nailers, blocking, fasteners and anchorage for support of electrical materials and equipment. Refer to Division 06, Rough Carpentry.
   6. Moisture protection and smoke barrier penetrations: Include membrane clamps, sheet metal flashing, counter flashing, caulking and sealant as required for waterproofing of

conduit penetrations and sealing penetrations in or through fire walls, floors, ceiling slabs and foundation walls. All penetrations through vapor barriers at slabs on grade shall be taped and made vaportight. Refer to Division 07, Thermal and Moisture Protection.

7. Access panels and doors: Required in walls, ceilings and floors to provide access to electrical devices and equipment. Refer to Division 08, Access Doors also, Division 05, Metals.
8. Painting: Include surface preparation, priming and finish coating as required for electrical cabinets, exposed conduit, pull and junction boxes, etc. where indicated as field painted in this Division. Refer to Division 09, Painting.

1.02 QUALITY ASSURANCE

A. Reference to Codes, Standards, Specifications and recommendations of technical societies, trade organizations and governmental agencies shall mean that latest edition of such publications adopted and published prior to submittal of the bid. Such codes or standards shall be considered a part of this Specification as though fully repeated herein.

B. When codes, standards, regulations, etc. allow Work of lesser quality or extent than is specified under this Division, nothing in said codes shall be construed or inferred authority for reducing the quality, requirements or extent of the Contract Documents. The Contract Documents address the minimum requirements for construction.

C. Work shall be performed in accordance with all applicable requirements of the latest edition of all governing codes, rules and regulations including but not limited to the following minimum standards, whether statutory or not:
   1. California Electric Code (CEC)
   2. California Building Code (CBC).
   3. California Fire Code (CFC).
   4. California Mechanical Code (CMC).

D. Standards: Equipment and materials specified under this Division shall conform to the following standards where applicable:

ACI	American Concrete Institute
ANSI	American National Standards Institute
ASTM	American Society for Testing Materials
CBM	Certified Ballast Manufacturers
ETL	Electrical Testing Laboratories
FS	Federal Specification
IEEE	Institute of Electrical and Electronics Engineers, Inc.
IPCEA	Insulated Power Cable Engineer Association
NEMA	National Electrical Manufacturer's Association
UL	Underwriters' Laboratories

E. All base material shall be ASTM and/or ANSI standards.

F. All electrical apparatus furnished under this Section shall conform to NEMA standards and the NEC and bear the UL label where such label is applicable.

G. Certify that each welder performing Work has satisfactorily passed AWS qualification tests for welding processes involved and, if pertinent, has undergone re-certification.

1.03 DEFINITION OF TERMS

A. The following list of terms as used in the Division 26 documents shall be defined as follows:
   1. "Provide": Shall mean furnish, install and connect unless otherwise indicated.
   2. "Furnish": Shall mean purchase and deliver to Project site.
   3. "Install": Shall mean to physically install the items in-place.
   4. "Connect": Shall mean make final electrical connections for a complete operating piece of equipment.
   5. "As directed": Shall be as directed by the Owner or their authorized Representative.
   6. "Utility Companies": Shall mean the company providing electrical, telephone or cable television services to the Project.

1.04 SUBMITTALS

A. Format: Furnish submittal data neatly bound in an 8-1/2" x 11" folder or binder for each Specification Section with a table of contents listing materials by Section and paragraph number.
B. Submittals shall consist of detailed Shop Drawings, Specifications, block wiring diagrams, "catalog cuts" and data sheets containing physical and dimensional information, performance data, electrical characteristics, materials used in fabrication and material finish. Clearly indicate by arrows or brackets precisely what is being submitted on and those optional accessories which are included and those which are excluded. Furnish quantities of each submittal as noted in Division 01.
C. Each submittal shall be labeled with the Specification Section Number and shall be accompanied by a cover letter or shall bear a stamp stating that the submittal has been thoroughly reviewed by the Contractor and is in full compliance with the requirements of the Contract Documents. Cover letters shall list in full the items and data submitted. Failure to comply with this requirement shall constitute grounds for rejection of data.
D. The Contractor shall submit detailed Drawings of all electrical equipment rooms and closets if the proposed installation layout differs from the construction documents. Physical size of electrical equipment indicated on the Drawings shall match those of the electrical equipment that is being submitted for review, i.e.: switchboards, panelboards, transformers, control panels, etc. Minimum scale: 1/4" = 1'- 0". Revised electrical equipment layouts must be approved prior to release of order for equipment and prior to installation.
E. All resubmittals shall include a cover letter that lists the action taken and revisions made to each Drawing and equipment data sheet in response to Submittal Review Comments. Resubmittal packages will not be reviewed unless accompanied by this cover letter. Failure to include this cover letter will constitute rejection of the resubmittal package.
F. Substitutions:
    1. All requests for substitutions shall conform to the general requirements and procedure outlined in Division 01.
    2. Where items are noted as "or equal," a product of equal design, construction and performance will be considered. Contractor must submit to the Engineer all pertinent test data, catalog cuts and product information required substantiating that the product is in fact equal to that specified. Only one substitution will be considered for each product specified.
    3. Manufacturers' names and model numbers used in conjunction with materials, processes or equipment included in the Contract Documents are used to establish standards of quality, utility and appearance. Materials, processes or equipment, which in the opinion of the Engineer is equal in quality, utility and appearance, will be approved as substitutions to that specified.
    4. Whenever any material, process or equipment is specified in accordance with a Federal specification, an ASTM standard, an ANSI specification, UL rating or other association standard, the Contractor shall present an affidavit from the Manufacturer certifying that the product complies with the particular standard specification. When requested by the Engineer, support test data to substantiate compliance shall be submitted by the Contractor at no additional cost.
    5. Substitutions shall be equal, in the opinion of the Architect/Engineer, to the specified product. The burden of proof of such shall rest with the Contractor. When the Architect/Engineer in writing accepts a substitution, it is with the understanding that the Contractor guaranteed the substituted article or material to be equal to the one specified and dimensioned to fit within the construction. Approved substitutions shall not relieve the Contractor of responsibilities for the proper execution of the Work or from any provisions of the Specifications.
    6. The Contractor shall be responsible for all expenses in connection with the substitution materials, processes and equipment, including the effect of the substitution on the Contractor, Subcontractor's or other Contractor's Work. No substitution of material, processes or equipment shall be permitted without written authorization of the

Architect/Engineer. Any assumptions on the acceptability of a proposed substitution prior to acceptance by the Engineer are at the sole risk of the Contractor.

1.05 COORDINATION

A. Discrepancies:
   1. In the event of discrepancies within the Contract Documents, the Engineer shall be so notified, within sufficient time, as delineated in Division 01, prior to the Bid Opening to allow the issuance of an Addendum.
   2. If, in the event that time does not permit notification or clarification of discrepancies prior to the Bid Opening, the following shall apply: The Drawings govern in matters of quantity and the Specifications govern in matters of quality. In the event of conflict within the Drawings involving quantities or within the Specifications involving quantities or within the Specifications involving quality, the greater quantity and higher quality shall apply. Such discrepancies shall be noted and clarified in the Contractor's Bid. No additional allowances will be made because of errors, ambiguities or omissions that reasonably should have been discovered during the preparation of the Bid.

B. Project conditions:
   1. Examination of Project site: The Contractor shall visit the Project site and thoroughly review the locale, working conditions, conflicting utilities and the conditions in which the Electrical Work will take place. Verify all existing conditions in the field. No allowances will be made subsequently for any costs that may be incurred because of any error or omission due to failure to examine the Project site and to notify the Engineer of any discrepancies between Contract Documents and actual Project site conditions.
   2. Protection: Keep conduits, junction boxes, outlet boxes and other openings closed to prevent entry of foreign matter. Cover fixtures, equipment, devices and apparatus and protect them against dirt, paint, water, chemical or mechanical damage, before and during construction period. Prior to final acceptance, restore to original condition any fixture, apparatus or equipment damaged including restoration of damaged factory applied painted finishes. Protect bright finished surfaces and similar items until in service. No rust or damage will be permitted.
   3. Supervision: Contractor shall personally or through an authorized and competent representative constantly supervise the Work from beginning to completion and, within reason, keep the same foreman and workmen on the Project throughout the Project duration.

C. Preparation:
   1. Drawings:
      a. Layout: General layout indicated on the Drawings shall be followed except where other Work may conflict with the Drawings.
      b. Accuracy: Drawings for the Work under this Section are essentially diagrammatic within the constraints of the symbology applied.

1.06 RECORD DOCUMENTS

A. Provide Project Record Drawings as described herein:
   1. Drawings shall fully represent installed conditions including actual locations of outlets, true panelboard connections following phase balancing routines, correct conduit and wire sizing as well as routing, revised fixture schedule listing Manufacturers and products actually installed and revised panel schedules. Contractor shall record all changes in the Work during the course of construction on blue or black line prints. These prints shall be made subject of monthly review by the Owner's Representative to ascertain that they are current. If not current monthly payments may be withheld.
   2. Record Drawings shall be the transfer of information on these prints to the construction documents via computer aided drafting (CAD) process. A set of CAD files of the electrical documents will be provided to the Contractor.
   3. Record drawing submissions shall be provided to the Engineer to review upon the completion of the following phases of Work:
      a. All underground installation.
      b. Building electrical rough-in.

c. Final electrical installation.

4. A single set of half size prints of the Record Drawings shall be submitted for review. Upon receipt of the Engineer's review comments, corrections shall be made and the Contractor shall provide the following:
   a. Two sets of full size prints.
   b. Four sets of half size prints.
   c. Electronic files of Drawings.

B. Panel schedules:
   1. Typewritten panel schedules shall be provided for panelboards indicating the loads served and the correct branch circuit number. Schedules shall be prepared on forms provided by the Manufacturer and inserted in the pocket of the inner door of each panelboard. See Section 262416: Panelboards for requirements.

1.07 OPERATION AND MAINTENANCE MANUALS

A. Prior to Project closeout furnish to the Owner, six (6) hard back 3-ring binders containing all bulletins, operation and maintenance instructions, part lists, service telephone numbers and other pertinent information as noted in each Section all equipment furnished under Division 26. Binders shall be indexed into Division Sections and labeled for easy reference. Bulletins containing more information than the equipment concerned shall be properly stripped and assembled.

PART 2 - PRODUCTS (NOT APPLICABLE)

PART 3 - EXECUTION

3.01 ROUGH-IN

A. Contractor shall verify lines, levels and dimensions indicated on the Drawings and shall be responsible for the accuracy of the setting out of Work and for its strict conformance with existing conditions at the Project site.

B. Verify final locations for rough-ins with field measurements and with the requirements for the actual equipment to be connected.

C. Refer to equipment specification in Divisions 22 through 33 for rough-in requirements.

3.02 ELECTRICAL INSTALLATION

A. Preparation, sequencing, handling and installation shall be in accordance with Manufacturer's written instructions and technical data particular to the product specified and/or accepted equal except as otherwise specified. Comply with the following requirements:
   1. Shop Drawings prepared by Manufacturer.
   2. Verify all dimensions by field measurements.
   3. Arrange for chases, slots and openings in other building components during progress of construction, to allow for electrical installations.
   4. Coordinate the installation of required supporting devices and sleeves to be set in poured-in-place concrete and other structural components, as they are constructed.
   5. Sequence, coordinate and integrate installations of electrical materials and equipment for efficient flow of the Work. Give particular attention to large equipment requiring positioning prior to closing in the building.
   6. Where mounting height is not detailed or dimensioned, contact the Architect for direction prior to proceeding with rough-in.
   7. Coordinate connection of electrical systems with exterior underground utilities and services. Comply with requirements of governing regulations, franchised service companies and controlling agencies. Provide required connection for each service.
   8. Install systems, materials and equipment to conform with approved submittal data, including coordination Drawings, to greatest extent possible. Conform to arrangements indicated by the Contract Documents, recognizing that portions of the Work are indicated only in diagrammatic form. Where coordination requirements conflict with individual system requirements, refer conflict to the Architect.
   9. Install systems, materials and equipment level and plumb, parallel and perpendicular to other building systems and components, where installed exposed in finished spaces.

10. Install electrical equipment to facilitate servicing, maintenance and repair or replacement of equipment components. As much as practical, connect equipment for ease of disconnecting, with minimum of interference with other installations.
11. Coordinate electrical systems, equipment and materials installations with other building components.
12. Provide access panel or doors where devices or equipment are concealed behind finished surfaces. Furnish and install access doors per the requirements of Division 08.
13. Install systems, materials and equipment giving right-of-way priority to other systems that are required to maintain a specified slope.
14. Conform to the National Electrical Contractor's Association "Standard of Installation" for general installation practice.

3.03 CUTTING, PATCHING, PAINTING AND SEALING

A. Structural members shall in no case be drilled, bored or notched in such a manner that will impair their structural value. Cutting of holes, if required, shall be done with core drill and only with the approval of the Architect and Structural Engineer.
B. Protection of Installed Work: During cutting and patching operations, protect adjacent installations.
C. Application of joint sealers:
   1. General: Comply with joint sealer Manufacturers' printed application instructions applicable to products and applications indicated, except where more stringent requirements apply.
   2. Installation of fire-stopping sealant: Install sealant, including forming, packing and other accessory materials, to fill openings around electrical services penetrating floors and walls, to provide fire-stops and fire-resistance ratings indicated for floor or wall assembly in which penetration occurs. Comply with installation requirements established by testing and inspecting agency.

3.04 FIELD QUALITY CONTROL

A. General testing requirements:
   1. The purpose of testing is to ensure that all tested electrical equipment, both Contractor and Owner supplied, is operational and within industry and Manufacturer’s tolerances and is installed in accordance with design Specifications.
   2. Tests and inspections shall determine suitability for energization.
   3. Perform tests in presence of the Owner's Representative and furnish test equipment, facilities and technical personnel required to perform tests.
   4. Tests shall be conducted during the construction period and at completion to determine conformity with applicable codes and with these Specifications.
B. Tests: In addition to specific system test described elsewhere, tests shall include:
   1. Lighting control circuits: Test lighting circuits for correct operation through their control devices.
   2. Circuit numbering verification: Select on a random basis various circuit breakers in the panelboards and cycle them on and off to verify compliance of the typed panel directories with actual field wiring.
C. Testing safety and precautions:
   1. Safety practices shall include the following requirements:
      a. Applicable State and Local safety operating procedures.
      b. OSHA.
      c. NSC.
      d. NFPA 70E.
   2. All tests shall be performed with apparatus de-energized and grounded except where otherwise specifically required ungrounded by test procedure.
D. Coordinate with General Contractor regarding testing schedule and availability of equipment ready for testing.
E. Notify Owner one week in advance of any testing.
F. Any products which fail during the tests or are ruled unsatisfactory by the Owner's Representative shall be replaced, repaired or corrected as prescribed by the Owner's

Representative at the expense of the Contractor. Tests shall be performed after repairs, replacements or corrections until satisfactory performance is demonstrated.

G. Include all test results in the maintenance manuals.

3.05 CLEANING

A. Prior to energizing of electrical equipment, the Contractor shall thoroughly clean the interior of enclosures from construction debris, scrap wire, etc. using Manufacturer's approved methods and materials.

B. Upon completion of Project, prior to final acceptance, the Contractor shall thoroughly clean both the interior and exterior of all electrical equipment per Manufacturers approved methods and materials. Remove paint splatters and other spots, dirt and debris.

C. Touch-up paint any marks, blemishes or other finish damage suffered during installation.

3.06 PROJECT CLOSEOUT

A. Special tools: Provide one of each tool required for proper operation and maintenance of the equipment provided under this Section. All tools shall be delivered to the Owner at the Project completion.

END OF SECTION

SECTION 260519

BUILDING WIRE AND CABLE

PART 1 - GENERAL

1.01 SUMMARY

A. Work included: Labor, materials and equipment necessary to complete the installation required for the item specified under this Division, including but not limited to:
   1. Building wire.
   2. Cable.
   3. Wiring connections and terminations.

B. Related Work: Consult all other Sections, determine the extent and character of related Work and properly coordinate Work specified herein with that specified elsewhere to produce a complete installation.

1.02 REFERENCES

A. Comply with the latest edition of the following applicable Specifications and standards except as otherwise indicated or specified:
   1. Federal Specifications (FS):
      FS J-C-30A; Cable and Wire, Electrical (Power, Fixed Installation).
      FS W-S-610C; Splice Conductor.
      FS HH-I-595C; Insulation Tape, Electrical, Pressure-Sensitive Adhesive, Plastic.
   2. Underwriters Laboratories, Inc. (UL):
      UL 44; Thermoset-Insulated Wires and Cables.
      UL 83; Thermoplastic-Insulated Wires and Cables.
      UL 183; Manufactured Wiring Systems.
      UL 310; Electrical Quick-Connect Terminals.
      UL 486A & B; Wire Connectors.
      UL 486C; Splicing Wire Connectors.
      UL 486D; Insulated Wire Connector Systems for Underground Use or in Damp or Wet Locations.
      UL 493; Thermoplastic-Insulated Underground Feeder and Branch Circuit Cables.
      UL 510; Polyvinyl Chloride, Polyethylene and Rubber Insulating Tape.
      UL 854; Service-Entrance Cables.
      UL 1581; Reference Standard for Electrical Wires, Cables and Flexible Cords.
   3. National Electrical Manufacturer Association (NEMA):
      NEMA WC-5; Thermoplastic Insulated Wire and Cable for the Transmission and Distribution of Electrical Energy.
      NEMA WC-7; Cross-Linked Thermosetting Polyethylene Insulated Wire and Cable for the Transmission and Distribution of Electrical Energy.
   4. Institute of Electrical and Electronic Engineers (IEEE):
      IEEE 82; Test Procedure for Impulse Voltage Tests on Insulated Conductors.

1.03 SUBMITTALS

A. Submit in accordance with the requirements of Section 260010: Basic Electrical Requirements, the following items:
   1. Data/catalog cuts for each product and component specified herein, listing all physical and electrical characteristics and ratings indicating compliance with all listed standards.
   2. Clearly mark on each data sheet the specific item(s) being submitted and the proposed application.
   3. Submit Manufacturer's installation instructions.
   4. Final test results.

1.04 QUALITY ASSURANCE

A. All materials, equipment and parts comprising the units specified herein shall be new, unused and currently under production.
B. Only products and applications listed in this Section may be used on the Project unless otherwise submitted.

PART 2 - PRODUCTS

2.01 MANUFACTURERS

A. Products furnished by the following Manufacturers shall be acceptable if in compliance with all features specified herein and indicated on the Drawings.
   1. Building wire:
      a. Cerrowire
      b. General Cable
      c. Southwire Company
      d. Stabiloy (aluminum only)
      e. United Wire and Cable
   2. Wiring connectors and terminations:
      a. 3M Company.
      b. Ideal.
      c. Blackburn-Holub.
      d. Burndy.
      e. Thomas & Betts Corp.
      f. Beau Barrier.
B. Substitutions: Under provisions of Section 260010: Basic Electrical Requirements.

2.02 BUILDING WIRE

A. Conductor material:
   1. Provide annealed copper for all wire, conductor and cable, unless otherwise indicated.
   2. Copper wire AWG #14 and larger shall be stranded, unless otherwise indicated.
   3. Copper wire AWG #16 and smaller may be solid or stranded as best suited for the installation.
B. Insulation material:
   1. All insulated wire, conductor and cable shall be 600 volt rated unless otherwise noted on the Drawings.
   2. Thermoplastic-insulated building wire: NEMA WC 5.
   3. Rubber-insulated building wire: NEMA WC 3.
   4. Copper feeders and branch circuits larger than #6 AWG: Type dual rated THHN/THWN***.***
   5. Copper feeders and branch circuits #6 AWG and smaller: Type dual rated THHN/THWN***.***
   6. Service Entrance: Type RHW or THWN.
   7. Control Circuits: Type dual rated THHN/THWN***.***
   8. Identify system conductors as to voltage and phase connections by means of color-impregnated insulation. Use of phase tape for identification is not acceptable.

2.03 WIRING CONNECTIONS AND TERMINATIONS

A. Bolted pressure connectors: Provide wide range-taking connectors with cast bronze compression bolts, designed for parallel taps, tees, crosses or end-to-end connections.
B. Electrical spring wire connectors:
   1. Provide multi-part construction incorporating a non-restricted, zinc coated square cross-section steel spring enclosed in a steel sheet with an outer jacket of plastic and insulating skirt.
   2. Self-striping pigtail and tap U-contact connectors shall not be used.
C. Compression type terminating lugs:
   1. Provide tin-plated copper high-compression type lugs for installation with hand or hydraulically operated circumference-crimping tools and dies as stipulated by the lug Manufacturer or as indicated on Drawings. Notch or single point type crimping is NOT acceptable.
   2. Two hole, long barrel lugs shall be provided for size (4/0) and larger wire where terminated to bus bars. Use minimum of three crimps per lug, on sizes where possible.

D. Splicing and insulating tape: Provide black, ultraviolet proof, self-extinguishing, 7 mil thick vinyl general purpose electrical tape with a dielectric strength of 10,000 volts suitable for temperatures from minus 18 degrees C to 105 degrees C. Federal Spec. HH-I-595, Scotch 33+ or equal minimum.
E. Insulating putty:
   1. Provide pads or rolls of non-corrosive, self-fusing, one-eighth inch thick rubber putty with PVC backing sheet. Scotch vinyl mastic pads and roll or equal.
   2. Use putty suitable for temperatures from minus 17.8 degrees C to 37.8 degrees C with a dielectric strength of 570-volts/mil minimum.
F. Insulating resin:
   1. Provide two-part liquid epoxy resin with resin and catalyst in pre-measured, sealed mixing pouch. Scotchcast 4 or equal for wet or underground vaults, boxes, etc. splices or terminations.
   2. Use resin with a set up time of approximately 30 minutes at 21.1 degrees C and with thermal and dielectric properties equal to the insulating properties of the cables immersed in the resin.
G. Terminal strips:
   1. Provide box type terminal strips in the required quantity plus 25% spare. Install in continuous rows in terminal cabinets.
   2. Use the box type terminal strips with barrier open backs and with ampere ratings as required.
   3. Identify all terminals with numbering sequence being used for a particular system.
H. Crimp type connectors:
   1. Provide insulated fork or ring crimp terminals with tinned electrolytic copper-brazed barrel with funnel wire entry and insulation support
   2. Fasten crimp type connectors or terminals using a crimping tool recommended by the connector Manufacturer.
   3. Provide insulated overlap splices with tinned seamless electrolytic copper barrel with funnel wire entry and insulation support.
   4. Provide insulated butt splices with tinned seamless electrolytic copper barrel with center stop, funnel wire entry and insulation support.
I. Cable ties: Provide harnessing and point-to-point wire bundling with nylon cable ties. All cable ties shall be installed using tool supplied by Manufacturer of ties.
J. Wire lubricating compound:
   1. UL listed for the wire insulation and conduit type and shall not harden or become adhesive.
   2. Shall not be used on wire for isolated type electrical power systems.
K. Bolt termination hardware:
   1. Bolts shall be plated, medium carbon steel heat-treated, quenched and tempered equal to ASTM A-325 or SAE grade 5; or silicon bronze alloy ASTM B-9954 Type B.
   2. Nuts shall be heavy semi-finished hexagon, conforming to ANSI B18.2.2, threads to be unified coarse series (UNC), class 2B steel or silicon bronze alloy.
   3. Flat washers shall be steel or silicon bronze, Type A plain standard wide series, confirming to ANSI B27.2. SAE or narrow series shall not be used.
   4. Belleville conical spring washers shall be hardened steel, cadmium plated or silicon bronze.
   5. Each bolt connecting lug(s) to a terminal or bus shall not carry current exceeding the following values:
      a. 1/4" bolt - 125 amps
      b. 5/16" bolt - 175 amps
      c. 3/8" bolt - 225 amps
      d. 1/2" bolt - 300 amps
      e. 5/8" bolt - 375 amps
      f. 3/4" bolt - 450 amps

PART 3 - EXECUTION

3.01 EXAMINATION

A. Contractor shall thoroughly examine Project site conditions for acceptance of wire and cable installation to verify conformance with Manufacturer and Specification tolerances. Do not commence with installation until all conditions are made satisfactory.

3.02 APPLICATION

A. All wire, conductor and cable with their respective connectors, fittings and supports shall be UL listed for the installed application and ambient condition.
B. Feeders and branch circuits in wet locations shall be rated 75 degree C.
C. Feeders and branch circuits in dry locations shall be rated 90 degree C.
D. Minimum conductor size:
   1. Provide minimum AWG #12 for all power and lighting branch circuits.
   2. Provide minimum AWG #14 for all line voltage signal and control wiring unless otherwise indicated.
E. Color coding:
   1. For 120/208 volt, 3 phase, 4 wire systems:
      a. Phase A - Black
      b. Phase B - Red
      c. Phase C - Blue
      d. Neutral - White
      e. Ground - Green
      f. Switch legs or traveler - Purple
   2. For 277/480 volt, 3 phase, 4 wire systems:
      a. Phase A - Brown
      b. Phase B - Orange
      c. Phase C - Yellow
      d. Neutral - Gray
      e. Ground - Green
      f. Switch legs or traveler - Pink
   3. Switch leg individually installed shall color as denoted above.
   4. Travelers for 3-way and 4-way switches shall color as denoted above.

3.03 WIRING METHODS

A. Install wires and cables in accordance with Manufacturer's written instructions, as indicated on Drawings and as specified herein.
B. Install all single conductors in raceway system, unless otherwise noted.
C. Parallel circuit conductors and terminations shall be equal in length and identical in all ways.
D. Provide adequate length of conductors within electrical enclosures and train the conductors to terminal points with no excess. Bundle multiple conductors, with conductors larger than #10 AWG cabled in individual circuits. Make terminations so there is no bare conductor at the terminal.
E. 20 amp power and lighting branch circuit containing no more than four (4) current carrying conductors (phases and neutrals). Use #10 AWG conductor for 120/208 volt circuits located outside a 75 foot radius of panel source and for 277 volt branch circuits located outside a 200 foot radius of panel source, unless otherwise noted.
F. 20 amp power and lighting branch circuits containing no more than eight (8) current carrying conductors (phases and neutrals). Use #10 AWG conductors for 120/208 volt circuits located outside a 65 foot radius of panel source and for 277/480 volt circuits located outside a 150 foot radius of panel source.
G. Provide #10 AWG pig tails on all 20A and 30A wiring devices served by #8 AWG conductors and larger.
H. Splice cables and wires only in outlet boxes, junction boxes, pull boxes, manholes or handholes. Group and bundle with tie wrap each neutral with it's associated phase conductor where more than one neutral is present in a conduit.
I. Install cable supports for all vertical feeders in accordance with the NEC Article 300. Provide split wedge type fittings, which firmly clamp each individual cable and tighten due to cable weight.

J. Neatly form, train and tie the cables in individual circuits. For panelboards, cabinets, wireways, switches and equipment assemblies.
K. Seal cable or wire, entering a building from underground or exiting walk-in cold box or freezer, between the wire or cable and conduit, where it exits the conduit, with a non-hardening approved compound, i.e. duct seal or equal.
L. Provide UL-listed factory-fabricated, solderless metal connectors of size, ampacity rating, material, type and class for applications and for services indicated. Use connectors with temperature ratings equal to or greater than the wires that are being terminated.
M. Stranded wire shall be terminated using fitting, lugs or devices listed for the application. However, in no case shall stranded wire be terminated solely by wrapping it around a screw or bolt.
N. Flexible cords and cables supplied, as part of a pre-manufacturer fixture or unit assembly shall be installed according to Manufacturers published installation instructions.

3.04 WIRING INSTALLATION IN RACEWAYS

A. Install wire in raceway after interior of building has been physically protected from the weather and all mechanical Work likely to injure conductors has been completed. Pull all conductors into a raceway at the same time. Exercise care in pulling conductors so that insulation is not damaged. Use UL listed, non-petroleum base and insulating type pulling compound as needed.
B. Completely mandrel all underground or concrete encased conduits prior to installing conductors.
C. Completely and thoroughly swab raceway system before installing conductors.
D. Do not use block and tackle, power driven winch or other mechanical means for pulling conductors of size smaller than AWG #1.
E. Wire pulling:
   1. Provide installation equipment that will prevent the cutting or abrasion of insulation during pulling of cables.
   2. Use rope made of nonmetallic material for pulling feeders.
   3. Attach pulling lines for feeders by means of either woven basket grips or pulling eyes attached directly to the conductors.
   4. Pull in together multiple conductors or cables in a single conduit.
F. Install and test all cables in accordance with Manufacturer's instructions and warranty.

3.05 INSTALLATION IN MANHOLES

A. Install and support cables in manhole on the steel racks with porcelain or equal insulators, unless otherwise noted. Train the cables around the manhole walls, but do not bend to a radius less than six times the overall cable diameter.

3.06 WIRE SPLICES, JOINTS AND TERMINATION

A. Join and terminate wire, conductors and cables in accordance with UL 486A, C, NEC and Manufacturer's instructions.
B. Splicing of any wire within 100 feet of its source location or 100 feet of its termination location is prohibited.
C. Thoroughly clean wires before installing lugs and connectors.
D. Make splices, taps and terminations to carry full ampacity of conductors without perceptible temperature rise.
E. Splices and terminations shall be made mechanically and electrically secure.
F. Where it's determined that unsatisfactory splice or terminations have been installed, remove the devices and install approved devices at no addition cost.
G. Terminate wires in Terminal Cabinets, relay and contactor panels, etc. using terminal strip connectors.
H. Insulate spare conductors with electrical tape and leave sufficient length to terminate anywhere in the panel or cabinet.
I. Install cable ties and maintain harnessing.
J. Encapsulate splices in exterior outlets, pullboxes and junction boxes using specified insulating resin kits. Make all splices watertight for exterior equipment and equipment in pump rooms.

K. Make up all splices and taps in accessible junction or outlet boxes with connectors as specified herein. Pigtails and taps shall be the same color as the feed conductor. Form conductor prior to cutting and provide at least six (6) inches of tail and neatly packed in box after splice is made up.
L. Branch circuits (#10 AWG and smaller):
   1. Connectors: Solderless, screw-on, reusable spring pressure cable type, 600 volt, 105-degree C. with integral insulation, approved for copper conductors.
   2. The integral insulator shall have a skirt to completely cover the stripped wires.
   3. The number, size and combination of conductors as listed on the Manufacturers packaging shall be strictly complied with.
M. Feeder circuits: (#4 to 750 MCM)
   1. Join or tap conductors from #4 AWG to 750 MCM insulate mechanical compression (hi-press) taps with pre-molded, snap-on insulating boots or specified conformable insulating pad and over wrapped with two half-lapped layers of vinyl insulating tape starting and ending at the middle of the joint.
   2. Terminate conductors from size #4 AWG to 750 MCM copper using mechanical compression lugs in accordance with Manufacturer recommendation or as specified elsewhere.
   3. Field installed compression connectors for cable sizes 250 MCM and larger shall have not less than two clamping elements or compression indents per wire.
   4. Insulate splices and joints with materials approved for the particular use, location, voltage and temperature. Insulate with not less than that of the conductor level that is being joined.
N. Termination hardware assemblies:
   1. AL/CU lugs connected to aluminum plated or copper buss, shall be secured using a steel bolt, flat washer (two per bolt), Belleville washer and nut.
   2. Copper lugs connected to copper bus, shall be secured using silicon bronze alloy bolt, flat washer (two per bolt), Belleville washer and nut.
   3. The crown of Belleville washers shall be under the nut.
   4. Bolt assemblies shall be torque to Manufacturer recommendation. Where manufacture recommendation are not obtainable, the following values shall be used:
      a. 1/4" - 20 bolt at 80-inch pounds torque.
      b. 5/16" - 18 bolt at 180-inch pounds torque.
      c. 3/8" - 16 bolt at 20-foot pounds torque.
      d. 1/2" - 13 bolt at 40-foot pounds torque.
      e. 5/8" - 11 bolt at 55-foot pounds torque.
      f. 3/4" - 10 bolt at 158-foot pounds torque.

3.07 IDENTIFICATION

A. Refer to Section 260553: Electrical Identification for additional requirements.
B. Securely tag all branch circuits. Mark conductors with specified vinyl wrap-around markers. Where more than two conductors run through a single outlet, mark each conductor with the corresponding circuit number. This shall include all grounded and ungrounded conductors. Conductors shall be marked in all junction boxes, panelboards and switchboards.
C. Provide all terminal strips with each individual terminal identified using specified vinyl markers.
D. In manholes, pullboxes and handholes, provide tags of the embossed brass type and also show the cable type and voltage rating. Attach the tags to the cables with slip-free plastic cable lacing units.

3.08 FIELD QUALITY CONTROL

A. Independent testing: Contractor shall arrange and pay for the services of an independent Testing Agency to perform all quality control electrical testing required herein. Independent Testing Agency shall meet the requirements as outlined in Section 260010: Basic Electrical Requirements.
B. Prefunctional testing:
   1. Visual and mechanical inspection:

a. Compare cable data with Contract Documents.
b. Inspect exposed sections of wires and cables for physical damage and proper connections.
c. Verify tightness of accessible bolted connections with calibrated torque wrench in accordance with Manufacturer's published data.
d. Inspect compression applied connectors for correct cable match and indention.
e. Verify visible cable bend meet or exceed ICEA and Manufacturer's minimum allowable bending radius.
f. If cables are terminated through window type current transformers, make an inspection to verify neutral and ground conductors are correctly placed for operation of protective devices.
g. Ensure wire and cable identification has been installed as specified herein.

2. Electrical testing:
   a. Contractor shall perform feeder and branch circuit insulation test after installation and prior to connection to utilization devices such as fixtures, motors or appliances. Testing shall be as follows:
      1) 100% of all feeders 100 amp rated and above.
      2) 50% of all feeders smaller than 100 amps.
      3) 10% of all branch circuits at each individual panelboard.
   b. Perform insulation-resistance test using megohm meter with applied potential of 1000V DC for a continuous duration of 60 seconds. Test conductors phase-to-phase and phase-to-ground. Conductors shall test free from short-circuit and ground faults.
   c. Perform continuity test of all feeder and branch circuits to ensure correct cable connections. Test all neutrals for improper grounds.
   d. Contractor shall furnish instruments, materials and labor for these tests.
3. Test values: Investigate resistance values less than 50 megohms.
4. Furnish test results in typewritten report form for review and inclusion in the operation and maintenance manuals.

END OF SECTION

SECTION 26 05 26

GROUNDING AND BONDING

PART 1 - GENERAL

1.01 SUMMARY

A. Work included: Labor, materials and equipment necessary to complete the installation required for the item specified under this Division, including but not limited to:
   1. Site lighting grounding.
   2. Electrical equipment and raceway grounding and bonding.

1.02 REFERENCES

A. Comply with the latest edition of the following applicable Specifications and standards except as otherwise indicated or specified:
   1. Underwriters Laboratories, Inc. (UL):
      UL 467; Grounding and Bonding Equipment.
   2. Institute of Electrical and Electronics Engineers, Inc. (IEEE):
      IEEE No. 142; Recommended Practice for Grounding of industrial and Commercial Power Systems.
      IEEE No. 81 Guide for Measuring Earth Resistivity, Ground Impedance, and Earth Surface Potentials of a Ground System.

1.03 SYSTEM DESCRIPTION

A. Resistance:
   1. Resistance from the main switchboard ground bus through the ground electrode to earth shall not exceed 5 OHMS unless otherwise noted.
   2. Resistance from the farthest panelboard, switchboard, etc. ground bus through the ground electrode to earth shall not exceed 20 OHMS

1.04 SUBMITTALS

A. Submit in accordance with the requirements of Section 260010: Basic Electrical Requirements, the following items:
   1. Data/catalog cuts for each product and component specified herein, listing all physical and electrical characteristics and ratings indicating compliance with all listed standards.
   2. Clearly mark on each data sheet the specific item(s) being submitted and the proposed application.
   3. Submit Manufacturer's installation instructions.

1.05 QUALITY ASSURANCE

A. All materials, equipment and parts comprising the units specified herein shall be new, unused and currently under production.
B. Only products and applications listed in this Section may be used on the Project unless otherwise submitted.

PART 2 - PRODUCTS

2.01 MANUFACTURERS

A. Products furnished by the following Manufacturers shall be acceptable if in compliance with all features specified herein and indicated on the Drawings.
   1. Ground Rods:
      a. Weaver.
      b. Erico "Cadweld" Products, Inc.
   2. Ground Wells:
      a. Christy Concrete Products, Inc.
      b. Forni Corp.
   3. Ground Bushings, Connectors, Jumpers and Bus:
      a. O-Z/Gedney.
      b. Thomas & Betts Corp.
B. Substitutions: Under provisions of Section 260010: Basic Electrical Requirements.

2.02 GROUND CONDUCTORS

A. Refer to Specification Section 260519: Building Wire and Cable for conductor specifications.

B. General purpose insulated:
   1. UL approved and code sized copper conductor, with dual rated THHN/THWN insulation, color identified green.
   2. Where continuous color-coded conductors are not commercially available, provide a minimum 4" long color band with green, non-aging, plastic tape in accordance with NEC/CEC.
C. Bare conductors in direct contact with earth or encased in concrete: #4/0 AWG copper minimum, U.O.N.
D. Bonding pigtails: Insulated copper conductor, identified green, sized per code and provide with termination screw or lug. Provide solid conductors for #10 AWG or smaller and stranded conductors for #8 AWG or larger.

2.03 DRIVEN (GROUND) RODS

A. Copper clad steel, minimum 3/4-inch diameter by 8 feet long, unless otherwise noted.

2.04 GROUND WELL BOXES FOR GROUND RODS

A. Precast concrete box nominal 9" throat diameter x 14" deep with light duty concrete cover for non-traffic areas or steel plate for traffic areas. Cover shall be embossed or engraved with "GROUND ROD".

2.05 INSULATED GROUNDING BUSHINGS

A. Plated malleable iron or steel body with 150 degree Centigrade molded plastic insulating throat and lay-in grounding lug.

PART 3 - EXECUTION

3.01 EXAMINATION

A. Contractor shall thoroughly examine Project site conditions for acceptance of grounding system installation to verify conformance with Manufacturer and Specification tolerances. Do not commence with installation until all conditions are made satisfactory.

3.02 INSTALLATION

A. Equipment bonding/grounding:
   1. Provide a NEC/CEC sized insulated copper ground conductor in all 120VAC through 600 VAC feeder and branch circuit distribution conduits and cables.
   2. Provide a separate grounding bus at panelboards, switchboards, etc.. Connect all metallic enclosed equipment so that with maximum fault current flowing, shall be maintained at not more than 35 volts above ground.
   3. Conduit terminating in concentric, eccentric or oversized knockouts at panelboards, cabinets, gutters, etc. shall have grounding bushings and bonding jumpers installed interconnecting all such conduits.
   4. Provide bonding jumpers across expansion and deflection couplings in conduit runs, pipe connections to water meters, dielectric couplings in metallic cold water piping system.
   5. Provide internal ground wire in flexible conduit connected at each end via grounding bushing.
   6. Provide external ground wire wrapped around flexible conduit and terminate to connectors designed for the purpose.
B. Site lighting grounding: Bond all metallic light poles and bollards. Provide ground rods where indicated on the Drawings.

3.03 FIELD QUALITY CONTROL

A. Prefunctional testing:
   1. Visual and mechanical inspection:
      a. Check tightness and welds of all ground conductor terminations.
      b. Verify installation complies with the intent of the Contract Documents
   2. Obtain and record ground resistance measurements both from electrical equipment ground bus to the ground electrode and from the ground electrode to earth. Furnish and install additional bonding and add grounding electrodes as required complying with resistance limits specified under this Section of the Specification.

3. A typewritten record of measured resistance values shall be submitted for review and included with the operation and maintenance manual furnished to the Owner at the time of Project closeout and before certificate of final payment is issued.

END OF SECTION

SECTION 26 05 31

CONDUIT

PART 1 - GENERAL

1.01 SUMMARY

A. Work included: Labor, materials and equipment necessary to complete the installation required for the item specified under this Division, including but not limited to:
   1. Rigid steel conduit and fittings.
   2. PVC insulated rigid steel conduit and fittings.
   3. Electrical metallic tubing and fittings.
   4. Rigid non-metallic conduit and fittings.
   5. Flexible metallic conduit and fittings.
   6. Liquidtight flexible metallic conduit and fittings.
   7. Rigid aluminum conduit and fittings.
   8. Miscellaneous conduit fittings and products.

B. Related Work: Consult all other Sections, determine the extent and character of related Work and properly coordinate Work specified herein with that specified elsewhere to produce a complete installation.
   1. Division 01: Cutting and patching.
   2. Division 07: Sheet metal flashing and trim.
   3. Division 09: Painting. Exposed conduit and other devices.

1.02 REFERENCES

A. Comply with the latest edition of the following applicable Specifications and standards except as otherwise indicated or specified:
   1. Federal Specifications (FS):
      FS WW-C-563; Electrical Metallic Tubing.
      FS WW-C-566; Specification for Flexible Metal Conduit.
      FS WW-C-581; Specification for Galvanized Rigid Conduit.
      FS W-C-1094A; Conduit and Conduit Fittings Plastic, Rigid.
   2. American National Standards Institute, Inc. (ANSI):
      ANSI C80.1; Rigid Steel Conduit, Zinc-Coated.
      ANSI C80.3; Electrical Metallic Tubing, Zinc Coated.
      ANSI C80.5; Rigid Aluminum Conduit.
   3. Underwriters Laboratories, Inc. (UL):
      UL 1; Flexible Metal Conduit.
      UL 6; Rigid Metal Conduit.
      UL 360; Liquid-Tight Flexible Steel Conduit.
      UL 514B; Conduit, Tubing and Cable Fittings.
      UL 635; Insulating Bushings.
      UL 651; Schedule 40 and 80 Rigid PVC Conduit.
      UL 797; Electrical Metallic Tubing - Steel.
   4. National Electrical Manufacturer Association (NEMA):
      NEMA RN1; PVC Externally coated Galvanized Rigid Steel Conduit.
      NEMA TC 2; Electrical Plastic Tubing and Conduit.
      NEMA TC 3; PVC Fittings for use with Rigid PVC Conduit.

1.03 SUBMITTALS

A. Submit in accordance with the requirements of Section 260010: Basic Electrical Requirements the following items:
   1. Data/catalog cuts for each product and component specified herein, listing all physical and electrical characteristics and ratings indicating compliance with all listed standards.
   2. Clearly mark on each data sheet the specific item(s) being submitted and the proposed application.
   3. Submit Manufacturer's installation instruction. Provide written instructions for raceway products requiring glues, special tools or specific installation techniques.

1.04 QUALITY ASSURANCE

A. All materials, equipment and parts comprising the units specified herein shall be new, unused and currently under production.
B. Only products and applications listed in this Section may be used on the Project unless otherwise submitted and approved.

PART 2 - PRODUCTS

2.01 MANUFACTURERS

A. Products furnished by the following Manufacturers shall be acceptable if in compliance with all features specified herein and indicated on the Drawings.
   1. Metal conduit:
      a. Allied Tube and Conduit Co.
      b. Triangle PWC, Inc.
      c. Western Tube and Conduit Corp.
      d. Spring City Electrical Manufacturing Co.
      e. Occidental Coating Co. (OCAL).
      f. Alflex Corp.
      g. American Flexible Metal Conduit Co.
      h. Anaconda.
   2. Nonmetallic conduit:
      a. Prime Conduit.
      b. JM Eagle.
      c. Cantex.
   3. Fittings:
      a. Appleton Electric Co.
      b. OZ/Gedney.
      c. Thomas & Betts Corp.
      d. Spring City Electrical Manufacturing Co.
      e. Occidental Coating Co. (OCAL).
      f. Carlon.
B. Substitutions: Under provisions of Section 260010: Basic Electrical Requirements.

2.02 GALVANIZED RIGID STEEL CONDUIT (GRS)

A. Conduit: Full weight, threaded, hot-dip galvanized steel, conforming to ANSI C80.1 and UL 6.
B. Standard threaded couplings, locknuts, bushings and elbows: Only materials of steel or malleable iron are acceptable. Locknuts shall be bonding type with sharp edges for digging into the metal wall of an enclosure.
C. Three piece couplings: Electroplated, cast malleable iron.
D. Insulating bushings: Threaded polypropylene or thermosetting phenolic rated 150 degree C minimum.
E. Insulated grounding bushings: Threaded cast malleable iron body with insulated throat and steel "lay-in" ground lug with compression screw.
F. Insulated metallic bushings: Threaded cast malleable iron body with plastic insulated throat rated 150 degrees C.
G. All fittings and connectors shall be threaded.

2.03 PVC INSULATED GALVANIZED RIGID STEEL CONDUIT (PVC GRS)

A. Conduit: Full weight, threaded, hot-dip galvanized steel, conforming to ANSI C80.1 and NEMA RN-1 with nominal 20 or 40 mil thermoplastic vinyl coating, heat fused and bonded to the exterior of the conduit.
B. Fittings: Conduit couplings and connectors shall be as specified for galvanized rigid steel conduit and shall be factory PVC coated with an insulating jacket equivalent to that of the coated material.

2.04 ELECTRICAL METALLIC TUBING (EMT)

A. Conduit: Shall be formed of cold rolled strip steel, electrical resistance welded continuously along the longitudinal seam and hot dip galvanized after fabrication. Conduit shall conform to ANSI C80.3 Specifications and shall meet UL requirements.

B. Set screw type couplings: Electroplated, steel or cast malleable iron, UL listed concrete tight. Use set screw type couplings with four setscrews each of conduit sizes over 2 inches. Setscrews shall be of case hardened steel with hex head and cup point to firmly seat in wall of conduit for positive grounding.
C. Set screw type connectors: Electroplated steel or cast malleable iron UL listed concrete tight with male hub and insulated plastic throat, 150 degree C temperature rated. Setscrew shall be same as for couplings.
D. Raintight couplings: Electroplate steel or cast malleable iron; UL listed raintight and concrete tight, using gland and ring compression type construction.
E. Raintight connectors: Electroplated steel or cast malleable iron, UL listed raintight and concrete tight, with insulated throat, using gland and ring compression type construction.
F. The use of “factory fittings” is prohibited.

2.05 RIGID NON-METALLIC CONDUIT (PVC)

A. Conduit:
1. Rigid polyvinyl chloride, Schedule 40 or 80 conforming to NEMA TC1 and UL 651, latest edition. UL listed for exposed and direct-burial applications and for 90 degrees C conductor insulation. Conduit shall include an integral bell fitting at one end.
2. Rigid polyvinyl chloride, Type EB or DB conforming to NEMA TC 6 and UL 651, latest edition. UL listed for concrete encased burial and direct burial applications and for 90 degrees C conductor insulation. Conduit shall include an integral bell fitting at one end.

B. Fittings: Couplings, adaptors, transition fittings, etc., shall be molded PVC, slip on, solvent weld type conforming to NEMA TC3 for Schedule 40 or 80 and NEMA TC 9 for type EB or DB.

2.06 FLEXIBLE METALLIC CONDUIT (FMC)

A. Conduit: Shall be fabricated in continuous lengths from galvanized steel strip, spirally wound and formed to provide an interlocking design and conforming to UL 1.
B. Fittings: Connectors shall be of the single screw clamp variety with steel or cast malleable iron bodies and threaded male hubs with insulated throats. Exception: Pressure cast screw-in connectors shall be acceptable for fixture connection in suspended ceilings and cut-in outlet boxes within existing furred walls.

2.07 LIQUIDTIGHT FLEXIBLE METALLIC CONDUIT (LFMC)

A. Conduit: Shall be fabricated in continuous lengths from galvanized steel strips, interlocking spirally wound, covered with extruded liquidtight jacket of polyvinyl chloride (PVC) and conforming to UL 360. Provide conduit with a continuous copper-bonding conductor wound spirally between the convolutions.
B. Fittings: Connector body and gland nut shall be of cadmium plated steel or cast malleable iron, with tapered, male, threaded hub; insulated throat and neoprene "O" ring gasket recessed into the face of the stop nut. The clamping gland shall be of molded nylon with an integral brass push-in ferrule.

2.08 RIGID ALUMINUM CONDUIT (RAL)

A. Conduit: Aluminum meeting the requirements of ANSI C80.5.
B. Fittings: Conduit couplings, connectors, bushings and elbows shall be aluminum.
C. The use of “factory fittings” is prohibited.

2.09 MISCELLANEOUS CONDUIT FITTINGS AND PRODUCTS

A. Watertight conduit entrance seals: Steel or cast malleable iron bodies and pressure clamps with PVC sleeve, neoprene sealing grommets and PVC coated steel pressure rings. Fittings shall be supplied with neoprene sealing rings between the body and PVC sleeve.
B. Watertight cable sealing bushings: One piece, compression molded sealing ring with PVC coated steel pressure disks, stainless steel sealing screws and zinc plated cast malleable iron locking collar.
C. Expansion fittings: Multi-piece unit comprised of a hot dip galvanized malleable iron or steel body and outside pressure bussing designed to allow a maximum of 4" conduit movement (2" in either direction). Furnish with external braid tinned copper bonding jumper. Unit shall be UL listed for wet or dry locations.
D. Expansion/deflection couplings: Multi-piece unit comprised of a neoprene sleeve with internal flexible tinned copper braid attached to bronze end couplings with stainless steel

bands. Coupling shall accommodate .75-inch deflection, expansion or contraction in any direction and allow 30-degree angular deflections. Flexible, corrosion-resistant, watertight, moisture and heat resistant molded rubber jacket and stainless steel jacket clamps. Unit shall comply with UL467 and UL514. Manufacturer shall be OZ/Gedney Type DX, Steel City Type EDF or equal.

E. Fire rated penetration seals:
   1. UL building materials directory classified.
   2. Conduit penetrations in fire rated separation shall be sealed with a UL classified fill, void or cavity material.
   3. The fire rated sealant material shall be the product best suited for each type of penetration and may be a caulk, putty, composite sheet or wrap/strip.

F. Standard products not herein specified:
   1. Provide listing of standard electrical conduit hardware and fittings not herein specified for approval prior to use or installation, i.e. locknuts, bushings, etc.
   2. Listing shall include Manufacturers name, part numbers and a written description of the item indicating type of material and construction.
   3. Miscellaneous components shall be equal in quality, material and construction to similar items herein specified.

G. Hazardous area fittings: UL listed for the application.

H. The use of “factory fittings” is prohibited.

PART 3 - EXECUTION

3.01 EXAMINATION

A. Contractor shall thoroughly examine Project site conditions for acceptance of conduit system installation to verify conformance with Manufacturer and Specification tolerances. Do not commence with installation until all conditions are made satisfactory.

3.02 APPLICATION

A. Galvanized rigid steel conduit (GRS) shall be used in the following applications:
   1. For feeders and branch circuits located indoors, concealed or exposed above suspended ceilings, in damp/wet locations, in crawl spaces, in attics, chases, furred spaces, equipment rooms, loading docks or in hazardous locations in accordance with NEC and local Codes.
   2. For feeders and branch circuits concealed in concrete floors and walls when not in contact with earth.
   3. For feeders and branch circuits in areas subject to moisture.
   4. For exposed conduit where food is being pre

B. PVC insulated galvanized rigid steel conduit shall be used in the following applications:
   1. Use 40-mil coating for feeders and branch circuits in damp or wet locations.
   2. Use 20 or 40 mil for feeders and branch circuits concealed in concrete walls or slabs in contact with earth.
   3. Use 20 or 40-mil for runs beneath floor slabs on grade.
   4. Use 40-mil for all below grade penetrations through floor slabs on grade or exterior walls.

C. Electrical metallic tubing (EMT): Shall be used exposed or concealed for interior electrical feeders 4" and smaller, interior power and lighting branch circuits and low tension distribution system where run above suspended ceilings, in concrete slabs and walls not in contact with earth; in stud walls, furred spaces and crawl spaces. EMT shall not be installed exposed below 6 feet above the finish floor except within electrical, communication or signal rooms or closets. EMT shall not be installed where subject to moisture.

D. Rigid non-metallic conduit (PVC): Shall be used in the following applications:
   1. Schedule 40 or 80 for feeders and branch circuits run beneath ground floor slab except that bends and penetrations through the floor must be PVC coated galvanized rigid steel.
   2. Schedule 40 or 80 for exterior branch circuits directly buried in earth, 18" minimum below grade. PVC may be used below exterior slabs not subject to vehicular traffic.
   3. PVC elbows shall be radius sweep type schedule 40 for bends 45°or less and large radius sweep type schedule 80 for bends 46°or greater.
   4. In general, PVC may not be run exposed in concrete walls or in floor slabs unless expressly indicated on the Drawings.

E. Flexible metallic conduit (FMC): Shall be used only in dry locations for connections from an adjacent outlet box or conduit to all motors, transformers, vibrating equipment or machinery, controllers, solenoid valves, float and flow switches or similar devices and to lighting fixtures installed in suspended ceilings, minimum sizes shall be 1/2" U.O.N. Shall not be used in lengths over twenty feet between accessible boxes. FMC shall only be installed in locations concealed by building finishes (i.e. above ceiling). Areas that are not concealed shall be LFMC.
F. Liquidtight flexible metallic conduit (LFMC): Shall be used in dry, wet or damp locations for connections from adjacent outlet box or conduit to all motors, transformers, vibrating equipment or machinery, controllers, solenoid valves, float and flow switches or similar devices. These areas are typically food preparation and dishwashing areas, sump wells, loading docks, pump rooms, exterior areas, etc. Minimum sizes shall be 1/2". When using flexible conduit in an area not concealed, LFMC shall be used. Shall be used for feeders and branch circuits installed exposed in areas where food is being prepped or served.
G. Rigid aluminum conduit (RAL): Shall be used for feeders and branch circuits installed exposed in areas where food is being prepped or served. Fittings shall be watertight with "Meyers Hubs" and NEMA 4X enclosures.

3.03 PREPARATION

A. Locations of conduit runs shall be planned in advance of the installation and coordinated with ductwork, plumbing, ceiling and wall construction in the same areas and shall not unnecessarily cross other conduits or pipe, nor prevent removal of ceiling tiles or panels, nor block access to mechanical or electrical equipment.
B. Where practical, install conduits in groups in parallel vertical or horizontal runs and at elevations that avoid unnecessary offsets.
C. All conduits shall be run parallel or at right angles to the centerlines of columns and beams, whether routed exposed, concealed above suspended ceiling or in concrete slabs.
D. Conduits shall not be placed closer than 12 inches to a flue, parallel hot water, steam line or other heat producing source or three inches from such lines when crossing perpendicular to the runs.
E. Exposed conduit installation shall not encroach into the ceiling height headroom of walkways or doorways. Where possible, install horizontal raceway runs above water and below steam piping.
F. The largest trade size conduits in concrete floor and wall slabs shall not exceed 1/3 the floor or wall thickness and conduits shall be spaced a minimum of three conduit diameters apart unless otherwise noted on the Drawings. All conduits shall be installed in the center of concrete slabs or wall and shall not be placed between reinforcing steel and the bottom of floor slabs.
G. In long runs of conduit, provide sufficient pull boxes inside buildings to facilitate pulling wires and cables, with spacing not to exceed 150 feet. Support pull boxes from structure independent of conduit supports. These pull boxes are not indicated on the Drawings.
H. Provide all reasonably inferred standard conduits fitting and products required to complete conduit installation to meet the intended application whether noted, indicated or specified in the Contract Documents or not.
I. Connect recessed lighting fixtures to conduit runs with maximum six feet of flexible metal conduit.

3.04 INSTALLATION

A. Install conduit in accordance with Manufacturer's written instructions, as indicated on Drawings and as specified herein.
B. Minimum Conduit Size: Unless otherwise noted herein or on Drawings, minimum conduit size shall be 1/2" for interior applications and 3/4" for exterior and underground applications.
C. All conduit sizes indicated on the Drawings are sized for copper conductors with THHN/THWN insulation. If conductor type or size is changed the Contractor shall be responsible for resizing conduits upward to meet Code.
D. In general, all conduit work shall be concealed where possible. Exceptions shall be electrical, communication and mechanical rooms, exposed ceiling areas, and parking garages.

E. Conduit connections to motors and surface cabinets shall be concealed, with the exception of electrical, communication and mechanical rooms, or unless exposed Work is clearly called for on the Drawings.
F. Install conduits in complete runs before pulling in cables or wires.
G. Install conduit free from dented, bruises or deformations. Remove and replace any damaged conduits with new undamaged material.
H. Conduits shall be well protected and tightly covered during construction using metallic bushings and bushing "pennies" to seal open ends.
I. In making joints in rigid steel conduit, ream conduit smooth after cutting and threading. Coat all field-threaded joints with UL approved conductive type compound to ensure low resistance ground continuity through conduit and to prevent seizing and corrosion.
J. Clean any conduit in which moisture or any foreign matter has collected before pulling in conductors. Paint all field-threaded joints to prevent corrosion.
K. In all empty conduits or ducts, install a “True Tape” conduit measuring tape line to provide overall conduit length for determining length of cables/conductors for future use.
L. Conduit systems shall be mechanically and electrically continuous throughout. Install code size, insulated, copper, green-grounding conductors in all conduit runs for branch circuits and feeders. This conductor is not indicated on the Drawings. Refer to Section 260526: Grounding and Bonding.
M. Metallic conduit shall not be in contact with other dissimilar metal pipes (i.e. plumbing).
N. Make bends with standard conduit bending hand tool or machines. The use of any item not specifically designed for the bending of electrical conduit is strictly prohibited. Factory bends are not acceptable, with the exception of PVC. EMT shall have no couplings within 30 inches of the center of the bend.
O. A run of conduit between terminations at wire pulling points shall not contain more than the equivalent of four quarter bends (360 degrees, total).
P. Above grade conduit for conductors above 600 volts use rigid steel.

3.05 PENETRATIONS

A. Locate penetrations and holes in advance where they are proposed in the structural sections such as footings, beams, wall, etc. Penetrations are acceptable only when the following occurs:
   1. Where indicated on the Structural Drawings.
   2. As approved by the Structural Engineer prior to construction and after submittal of Drawing showing location, size and position of each penetration.
B. Cutting or holes:
   1. Cut holes through concrete, masonry block or brick floors and floors of structure with a diamond core drill or concrete saw. Pneumatic hammer, impact electric, hand or manual hammer type drills are not allowed, except where permitted by the Structural Engineer as required by limited working space. Obtain the approval of the Structural Engineer prior to drilling through structural sections.
   2. Provide sleeves or “can outs” for cast-in-place concrete floors and walls. Following conduit installation, seal all penetrations using non-iron bearing, chloride free, non-shrinking, dry-pack grouting compounds; or fire rated penetration-sealing materials.
   3. Cut holes for conduit penetrations through non-concrete and non-masonry walls, partitions or floors with a hole saw. The hole shall be only as large as required to accommodate the size of the conduit.
   4. Provide single piece escutcheon plates around all exposed conduit penetrations in public places.
C. Sealing:
   1. Non-rated penetrations: Pack opening around conduits with non-flammable insulating material and seal with gypsum wallboard taping compound.
   2. Fire stop: Where conduits, wireways and other electrical raceways pass through fire rated partitions, walls, smoke partitions or floor; install a UL classified fire stop material to provide an effective barrier against the spread of fire, smoke and gases. Completely fill and seal clearances between raceways and openings with the fire stop material.

D. Waterproofing: At floor, exterior wall and roof conduit penetrations, completely seal clearances around the conduit and make watertight as specified in Division 07: Sealants and Caulking.
   1. Install specified watertight conduit entrance seals at all below grade wall and floor penetrations. Conduits penetrating exterior building walls and building floor slab shall be PVC coated rigid galvanized steel.
   2. For roof penetrations furnish and install roof flashing, counter flashing and pitch-pockets as specified under Roofing and Sheet Metal Sections of the Specifications.
   3. Provide membrane clamps and cable sealing fittings for any conduit that horizontally penetrates the waterproof membrane.
   4. Conduits that horizontally penetrate a waterproof membrane shall fall away from and below the penetration on the exterior side a minimum of two times the conduit diameters.

3.06 CONCEALED IN CONCRETE

A. Install conduits approximately in the center of the slab so that there will be a minimum of 3/4-inch of concrete around the conduits.
B. Installation of conduit in structural concrete that is less than three inches thick is prohibited. Topping slabs, maintenance pads and curbs are exempted.
C. Tie conduits to reinforcing rods or otherwise secure them to prevent sagging or shifting during concrete placement. Run conduit larger than 1-inch trade size, parallel with or at right angles to the main reinforcement; where at right angles to the reinforcement, the conduit shall be close to one of the supports of the slab.
D. Where nonmetallic conduit or tubing is used, raceways must be converted to PVC coated rigid steel conduit before rising above floor.
E. Make couplings and connections watertight.
F. Protect stub-ups from damage where conduits rise from floor slabs. Arrange so curved portion of bends is not visible above the finished slab.

3.07 TERMINATIONS AND JOINTS

A. Use raceway fittings that are of types compatible with the associated raceway and suitable for the use and location.
B. Raceways shall be joined using specified couplings or transition couplings where dissimilar raceway systems are joined.
C. Conduits shall be securely fastened to cabinets, boxes and gutters using two locknuts and an insulating bushing or specified insulated connectors. Where joints cannot be made tight, use bonding jumpers to provide electrical continuity of the raceway system. Where terminations are subject to vibration, use bonding bushings or wedges to assure electrical continuity. Where subject to vibration or dampness, use insulating bushings to protect conductors. Install grounding bushings or bonding jumpers on all conduits terminating at concentric or eccentric knockouts.
D. Conduit terminations exposed at weatherproof enclosures and cast outlet boxes shall be made watertight using specified connectors and hubs.
E. Stub-up connections: Extend conduits through concrete floor for connection to freestanding equipment with an adjustable top or coupling threaded inside for plugs and set flush with the finished floor. Extend conductors to equipment with rigid steel conduit; flexible metal conduit may be used 6 inches above the floor. Where equipment connections are not made under this contract, install screwdriver operated threaded flush plugs with floor.
F. Install specified cable sealing bushings on all conduits originating outside the building walls and terminating in switchgear, cabinets or gutters inside the building. Install cable sealing bushings or raceway seal for conduit terminations in all grade level or below grade exterior pull, junction or outlet boxes.
G. Raceway seal: Inject into wire filled raceways, a pre-formulated rigid 2 lbs. density polyurethane foam which expands a minimum 35 times it's original bulk. Foam shall have the physical properties of water vapor transmission of 1.2 to 3.0 perms; water absorption less than 2% by volume, fungus and bacterial resistant. Foam shall permanent seal against water, moisture, insects and rodents. Install raceway sealing foam at the following points:

1. Where conduits pass from warm locations to cold locations to prevent passage of water vapor (such as refrigerated spaces, constant temperature rooms, air-conditioned spaces, etc.).
2. Where conduits enter buildings from below grade.

H. Install expansion couplings where any conduit crosses a building separation or expansion joint as follows:
1. Conduits three inches and larger, shall be rigidly secured to the building structure on opposite sides of a building expansion joint and provided with expansion or deflection couplings. Install the couplings in accordance with the Manufacturer's recommendations.
2. Conduits smaller than three inches shall be rigidly secured to the building structure on opposite sides of a building expansion joint with junction boxes on both sides of the joint. Connect conduits to junction boxes with 15 inches of slack flexible conduit. Flexible conduit shall have a copper green ground-bonding jumper installed. For concrete embedded conduit, use expansion and deflection couplings as specified above for three inches and larger conduits.

I. Use short length (maximum of 6ft) of the appropriate FMC or LFMC conduit for connections to motors and other electrical equipment subject to movement, vibration, misalignment, cramped quarters or noise transmission. Provide liquidtight flexible metal conduit for installation in exterior locations, moisture or humidity-laden atmosphere, corrosive atmosphere, water hose or spray wash-down operations and locations subject to seepage or dripping of oil, grease or water. Provide a green ground wire with FMC or LFMC conduit.

3.08 SUPPORTS

A. Provide supports for raceways as specified in Section 260529: Electrical Hangers and Supports.

B. All raceways systems shall be secured to building structures using specified fasteners, clamps and hangers spaced according to the NEC.

C. Support single runs of conduit using one-hole pipe straps. Where run horizontally on walls in damp or wet locations, install "clamp backs" to space conduit off the surface.

D. Multiple conduit runs shall be supported using "trapeze" hangers fabricated from specified construction channel, mounted to 3/8-inch diameter, threaded steel rods secured to building structures. Fasten conduit to construction channel with standard one-hole pipe clamps or the equivalent. Provide lateral seismic bracing for hangers.

E. Individual 1/2" and 3/4" conduits installed above suspended ceilings may be attached to the ceiling's hanger wire using spring steel support clips provided that not more than two conduits are attached to any single support wire.

F. Support exposed vertical conduit runs at each floor level, independent of cabinets or switches to which they run, by means of acceptable supports.

G. Fasteners and supports in solid masonry and concrete:
1. Use steel or malleable iron concrete inserts set in place prior to placing the concrete.
2. After concrete installation:
a. Steel expansion anchors not less than ¼ inch bolt size and not less than 1-1/8 inch embedment.
b. Power set fasteners not less than ¼ inch diameter with depth of penetration not less than three inches.
c. Use vibration and shock resistant anchors and fasteners for attaching to concrete ceilings.

H. Hollow masonry: Toggle bolts are permitted. Bolts supported only by masonry block are not acceptable.

I. Metal structures: Use machine screw fasteners or other devices specifically designed and approved for the application.

END OF SECTION

SECTION 26 05 33

BOXES

PART 1 - GENERAL

1.01 SUMMARY

A. Work included: Labor, materials and equipment necessary to complete the installation required for the item specified under this Division, including but not limited to:
   1. Wall and ceiling outlet boxes.
   2. Pull and junction boxes.

B. Related Work: Consult all other Sections, determine the extent and character of related Work and properly coordinate Work specified herein with that specified elsewhere to produce a complete installation.
   1. Division 08: Access doors. Wall and ceiling access doors.

1.02 REFERENCES

A. Comply with the latest edition of the following applicable Specifications and standards except as otherwise indicated or specified.
   1. American National Standards Institute/National Electrical Manufacturer Association:
      ANSI/NEMA OS-1; Sheet-Steel Outlet Boxes, Device Boxes, Covers and Box Supports.
      ANSI/NEMA OS-2; Nonmetallic Outlet Boxes, Device Boxes, Covers and Box Supports.
      NEMA 250; Enclosures for Electrical Equipment (1000 volts maximum).
   2. Underwriters Laboratories (UL):
      UL 50; Enclosures for Electrical Equipment.
      UL 514A; Metallic Outlet Boxes.
      UL 1773; Termination Boxes.

1.03 SUBMITTALS

A. Submit in accordance with the requirements of Section 260010: Basic Electrical Requirements, the following items:
   1. Data/catalog cuts for each product and component specified herein, listing all physical and electrical characteristics and ratings indicating compliance with all listed standards.
   2. Clearly mark on each data sheet the specific item(s) being submitted and the proposed application.
   3. Submit Manufacturer's installation instructions.

1.04 QUALITY ASSURANCE

A. All materials, equipment and parts comprising the units specified herein shall be new, unused and currently under production.

B. Only products and applications listed in this Section may be used on the Project unless otherwise submitted.

PART 2 - PRODUCTS

2.01 MANUFACTURERS

A. Products furnished by the following Manufacturers shall be acceptable if in compliance with all features specified herein and indicated on the Drawings.
   1. Outlet and junction boxes:
      a. Spring City Electrical Manufacturing Co.
      b. Thomas & Betts Corp.
      c. Raco, Inc.
   2. Cast boxes:
      a. Appleton Electric Co.
      b. Crouse-Hinds.
   3. Floor boxes:
      a. Hubbell Inc.
      b. Walker.
      c. Raceway Components, Inc.

4. Pullboxes:
    a. *Circle AW Products.*
    b. *Hoffman Engineering Co.*

B. Substitutions: Under provisions of Section 260010: Basic Electrical Requirements.

2.02 OUTLET BOXES

A. Standard outlet box:
1. Provide galvanized, one-piece die formed or drawn steel, knockout type box of size and configuration best suited to the application indicated on the Drawings.
2. 4-inch square by 1-1/2 inch deep shall be minimum box size.
3. ANSI/NEMA OS 1.

B. Concrete box:
1. Provide galvanized steel, 4-inch octagon rings with mounting lugs, backplate and adapter ring as required.
2. Select height as necessary to position knockouts above concrete reinforcing steel.
3. ANSI/NEMA OS 1.

C. Tile box:
1. Provide outlet boxes for installation in tile or concrete block walls.
2. Standard outlet boxes with raised, square corners and device covers are acceptable.
3. ANSI/NEMA OS 1.

D. Cast metal outlet body:
1. Provide four inch round, galvanized cast iron alloy with threaded hubs and mounting lugs as required.
2. Provide boxes with cast cover plates of the same material as the box and neoprene cover gaskets.

E. Conduit outlet body: Provide Cadmium plated cast iron alloy, oblong conduit outlet bodies with threaded conduit hubs and neoprene gasket, cast iron covers.

2.03 PULL AND JUNCTION BOXES

A. Sheet metal pull and junction box:
1. Provide standard outlet or concrete ring boxes wherever possible; otherwise use minimum 16 gauge galvanized sheet metal, NEMA 1 boxes, sized to Code requirements with covers secured by cadmium plated machine screws located 6 inches on centers.
2. ANSI/NEMA OS 1.

B. Cast metal pull and junction box: Provide standard cast malleable iron outlet or device boxes wherever possible; otherwise use cadmium plated, cast malleable iron boxes with bolt-on, interchangeable conduit hub plates with neoprene gaskets.

C. Flush mounted pullboxes and junction boxes: Provide overlapping covers with flush head cover retaining screws, prime coated.

2.04 FLOOR BOXES

A. Refer to Section 262726: Wiring Devices for floor mounted service boxes.

PART 3 - EXECUTION

3.01 EXAMINATION

A. Contractor shall thoroughly examine Project site conditions for acceptance of box installation to verify conformance with Manufacturer and Specification tolerances. Do not commence with installation until all conditions are made satisfactory.

3.02 PREPARATION

A. Install all outlet boxes flush with building walls, ceilings and floors except where boxes are installed in mechanical and electrical rooms, in cabinetry, above accessible ceilings or where exposed Work is called for on the Drawings.

B. Locate pullboxes and junction boxes in concealed locations above removable ceilings or exposed in electrical rooms, utility rooms or storage areas.

C. Install outlet boxes at the locations and elevations indicated on the Drawings or specified herein. Make adjustments to locations as required by structural conditions and to suit coordination requirements of other trades.

D. Locate switch outlet boxes on the latch side of doorways unless otherwise indicated.

E. Locate outlet boxes above hung ceilings having concealed suspension systems, adjacent to openings for removable recessed lighting fixtures.

F. Do not install outlet boxes back-to-back, separate boxes by at least 6". In fire rated walls separate boxes by at least 24" and wall stud.
G. Adjust position of outlet boxes in finished masonry walls to suit masonry course lines. Coordinate cutting of masonry walls to achieve neat openings for boxes.

3.03 INSTALLATION

A. Install boxes in accordance with Manufacturer's written instructions, as indicated on Drawings and as specified herein.
B. Locate electrical boxes as indicated on Drawings and as required for splices, taps, wire pulling, equipment connections and Code compliance.
C. Install junction or pullboxes where required to limit bends in conduit runs to not more than 360 degrees or where pulling tension achieved would exceed the maximum allowable for the cable to be installed. Note that these boxes are not indicated on the Drawings.
D. Install raised covers (plaster rings) on all outlet boxes in stud walls or in furred, suspended or exposed concrete ceilings. Covers shall be of a depth to suit the wall or ceiling finish.
E. Leave no unused openings in any box. Install close-up plugs as required to seal openings.
F. Provide cast metal boxes with gasketed cast metal cover plates where boxes are exposed in damp or wet locations.
G. Provide precast concrete boxes in exterior planting areas, walkways, roads etc.
H. Provide an access panel in permanent ceiling or wall where boxes are installed and will be inaccessible.
I. For boxes mounted in exterior walls, make sure that there is insulation behind outlet boxes to prevent condensation in boxes.
J. For outlets mounted above counters, benches or backsplashes, coordinate location and mounting heights with built-in units. Adjust mounting height to agree with required location for equipment served.
K. Use conduit outlet bodies to facilitate pulling of conductors or to make changes in conduit direction only. Do not make splices in conduit outlet bodies.
L. Add additional sheet rock as necessary to maintain original fire rating of walls where boxes are installed.
M. Install galvanized steel coverplates on boxes in unfinished areas, above accessible ceilings and on surface mounted outlets.

3.04 SUPPORTS

A. Provide boxes installed in metal stud walls with brackets designed for attaching directly to the studs or mount boxes on specified box supports.
B. Mount boxes, installed in suspended ceilings of gypsum board or lath and plaster construction, to 16 gauge metal channel bars attached to main ceiling runners.
C. Support boxes independently of conduit system.
D. Support boxes, installed in suspended ceilings supporting acoustical tiles or panels, directly from the structure above wherever pendant mounted lighting fixtures are to be installed from the box.
E. Support boxes, mounted above suspended acoustical tile ceilings, directly from the structure above.

END OF SECTION

SECTION 260543

UNDERGROUND DUCTS AND STRUCTURES

PART 1 - GENERAL

1.01 SUMMARY

A. Work included: Labor, materials and equipment necessary to complete the installation required for the item specified under this Division, including but not limited to:
   1. Underground conduits and ducts.
   2. Duct banks.
   3. Handhole and pullboxes.
   4. Other underground utility structures.
   5. Excavation, trenching and backfill.

B. Related Work: Consult all other Sections, determine the extent and character of related Work and properly coordinate Work specified herein with that specified elsewhere to produce a complete installation.
   1. Division 31 - Earthwork: General requirements for Excavation and Backfill and related items for ducts, manholes, pullboxes and handholes.

1.02 REFERENCES

A. Comply with the latest edition of the following applicable Specifications and standards except as otherwise indicated or specified:
   1. Federal Specifications (FS):
      FS WW-C-581; Specification for Galvanized Rigid Conduit.
      FS W-C-1094A; Conduit and Conduit Fittings Plastic, Rigid.
   2. American Concrete Institute (ACI):
      ACI 318; Building Code Requirements for Structural Concrete
   3. American Society for Testing And Materials (ASTM):
      ASTM C31; Standard Practice for Making and Curing Concrete Test Specimens in the Field
      ASTM C39; Test Method for Compressive Strength of Cylindrical Concrete Specimens
      ASTM C172; Standard Practice for Sampling Freshly Mixed Concrete
      ASTM C192; Practice for Making and Curing Concrete Test Specimens in the Laboratory
      ASTM C231; Test Method for Air Content of Freshly Mixed Concrete by the Pressure Method
      ASTM C1064; Standard Test Method for Temperature of Freshly Mixed Concrete
      ASTM C1231; Standard Practice for Use of Unbonded Caps in Determination of Compressive Strength of Hardened Concrete Cylinder

1.03 DEFINITIONS

A. Duct: Electrical conduit and other raceway, either metallic or nonmetallic, used underground embedded in earth.

B. Duct bank: Two or more conduits or other raceway installed underground in same trench or concrete envelope.

C. Handhole: An underground junction box in a duct or duct bank.

D. Manhole: An underground utility structure, large enough for a person to enter, connecting with ducts to afford facilities for installing and maintaining cables.

E. Vault: An underground utility structure, large enough for a person to enter, connecting with ducts to afford facilities for installing, operating and maintaining equipment and wiring.

1.04 SUBMITTALS

A. Submit in accordance with the requirements of Section 260010: Basic Electrical Requirements, the following items:

1. Data/catalog cuts for each product and component specified herein, listing all physical and electrical characteristics and ratings indicating compliance with all listed standards.
2. Clearly mark on each data sheet the specific item(s) being submitted and the proposed application.
3. Submit concrete mix thermal resistivity report with initial conditions and thermal dryout curves (Resistivity vs. Water Content).
4. Submit Manufacturer's installation instructions.
5. Complete bill of material listing all components.
6. Coordination Drawings showing duct profiles and coordination with other utilities and underground structures. Include plans and section drawn to accurate scale.

1.05 QUALITY ASSURANCE

A. All materials, equipment and parts comprising the units specified herein shall be new, unused and currently under production.
B. Only products and applications listed in this Section may be used on the Project unless otherwise submitted and approved.
C. Precast concrete vaults shall be designed and fabricated by an experienced and acceptable precast concrete manufacturer. The manufacturer shall have been regularly and continuously engaged in the manufacture of precast concrete units similar to that indicated in the project specifications or drawings for at least 10 years.

PART 2 - PRODUCTS

2.01 MANUFACTURERS

A. Products furnished by the following Manufacturers shall be acceptable if in compliance with all features specified herein and indicated on the Drawings.
   1. Underground precast concrete utility structures:
      a. Oldcastle Enclosure Solutions.
      b. Jensen Precast.
B. Substitution: Under provisions of Section 260010: Basic Electrical Requirements.

2.02 CONDUIT AND DUCT

A. Refer to 16131: Conduit.
B. Duct supports: Rigid PVC spacers selected to provide minimum duct spacing and concrete cover depths, while supporting ducts during concrete pour.
C. Duct sealing compound: Non-hardening, safe for human skin contact, not deleterious to cable insulation, workable at temperatures as low as 35 degree F, withstands temperature of 300 degrees F without slump and adheres to clean surfaces of plastic ducts, metallic conduits, conduit coatings, concrete, cable sheaths and jackets, etc.

2.03 PULLBOXES AND HANDHOLES

A. Construction: High densities precast reinforced concrete box, extension, base and cover. Furnish box with end and side knockouts and non-settling shoulders. Cover shall have hold-down bolts and two lifting eyes.
B. Size: As indicated on the Drawings.
C. Cover markings: Covers shall read "ELECTRICAL" or "SIGNAL" as appropriate.
D. Rated covers: Use cast iron lid with H20 traffic rating when subject to vehicular traffic.

2.04 CONSTRUCTION MATERIALS

A. Mortar: Conform to ASTM C270, Type M, except for quantities less than 2.0 Cu. Ft., where packaged mix complying with ASTM C387, Type M may be used.
B. Concrete: Conform to Division 03: Cast-in-place concrete for concrete and reinforcing.
   1. Strength: 3,000-PSI minimum 28-day compressive strength.
   2. Aggregate for duct encasement: 3/8-inch maximum size, 4 sack mix.
   3. Dry thermal resistivity (Rho): 54 or less with 0% water content.

PART 3 - EXECUTION

3.01 EXAMINATION

A. Contractor shall thoroughly examine Project site conditions for acceptance of duct and manhole installation to verify conformance with Manufacturer and Specification tolerances. Do not commence with installation until all conditions are made satisfactory.

3.02 EARTHWORK

A. Excavation and backfill: Conform to Division 31, Earthwork.
B. Excavation for underground electrical structures: Conform to elevations and dimensions indicated within a tolerance of plus or minus 0.10 foot; plus a sufficient distance to permit placing and removal of concrete formwork, installation or services, other construction and for inspection.
   1. Excavate, by hand, areas within drip-line of large trees. Protect the root system for damage and dry-out. Maintain moist conditions for root system and over exposed roots with burlap. Paint root cuts of 1 inch in diameter and larger with emulsified asphalt tree paint.
   2. Take care not to disturb bottom of excavation. Excavate by hand to final grade just before concrete reinforcement is placed.
C. Trenching: Excavate trenches for electrical installation as follows:
   1. Excavate trenches to the uniform width, sufficiently wide to provide ample working room and a minimum of 6 to 9 inches clearances on both sides of raceways and equipment.
   2. Excavate trenches to depth indicated or required.
   3. Limit the length of open trench to that in which installations can be made and the trench backfilled within the same day.
   4. Where rock is encountered, carry excavation below required elevation and backfill with a layer of crushed stone or gravel prior to installation of raceways and equipment. Provide a minimum of 6 inches of stone or gravel cushion between rock bearing surface and electrical installations.
D. Backfilling and filling: Place soil materials in layers to required sub-grade elevations for each area classification, using materials and methods specified in Division 31: Earthwork.
   1. Under building slabs, use drainage fill materials.

3.03 CONDUIT AND DUCT INSTALLATION

A. Install duct lines in accordance with Manufacturer's written instructions, as indicated on the Drawings and as specified herein.
B. Application:
   1. Direct burial ducts: Schedule 40**,** minimum 24-inches below finished grade.
   2. Below building slab-on-grade: Schedule 40, minimum 4-inches below bottom of slab except that bends and penetrates through floor slab shall be PVC coated galvanized rigid steel.
   3. Below roads and paved surfaces:
      a. Schedule 80, minimum 36-inches below finished grade.
   4. Penetrations of building and equipment slabs: PVC insulated rigid steel**.**
C. Slope duct to drain towards manholes and handholes and away from building and equipment entrances. Pitch not less than 4-inches per 100-feet. Curved sections in duct lines shall consist of long sweep bends with a minimum radius of 25-feet in the horizontal and vertical directions. The use of manufactured bends is limited to building entrances and equipment stub-ups.
D. Underground conduit stub-ups to inside of building and exterior equipment shall be PVC insulated rigid steel.
E. Make joints in ducts and fittings watertight according to Manufacturer's instructions. Stagger couplings so those of adjacent ducts do not lie in the same plane.
F. Terminate duct lines at manholes and handholes with end bells spaced 10-inches on center for 5-inch ducts and varied proportionately for other duct sizes. Change from regular spacing to end-bell spacing 10-feet from the end bell without reducing duct line slope and without forming trap in the line**.** Grout end bells into manhole walls from both sides to provide watertight entrance.
G. Separation between direct buried duct lines shall be 3-inches minimum for like systems and 12 inches minimum between power and signal ducts.
H. Provide #12 AWG (or larger) copper clad steel insulated solid copper, or approved equal trace wires a minimum of 6” above all underground nonmetallic ducts and edges of all duct

banks for locating. Contractor will be responsible for accurately documenting the width and depth of each underground duct and duct bank on their As-Built drawings.

I. For direct burial installations install continuous warning strip of heavy gage plastic imprinted "electrical ducts below", approximately 12-inch wide at 12-inches above ducts.

J. Mandrel all ducts upon completion of installation and prior to pulling cables.

3.04 HANDHOLE AND PULL BOX INSTALLATION

A. Install handholes in accordance with Manufacturer's written instructions, as indicated on Drawings and as specified herein.

B. Handholes shall be installed flush with finished grade or surface. Install on a level 6-inch bed of well-tamped gravel or crushed stone.

C. Orientation of handholes shall be coordinated in advance with Landscape Architect and arranged to minimize connecting duct bends and deflections.

3.05 CLEANING

A. Pull brush through full length of ducts. Use round bristle brush with a diameter 1/2-inch greater than internal diameter of duct.

B. Clean internal surfaces of handholes and manholes including sump. Remove foreign material.

END OF SECTION

SECTION 26 05 53

ELECTRICAL IDENTIFICATION

PART 1 - GENERAL

1.01 SUMMARY

A. Work included: Labor, materials and equipment necessary to complete the installation required for the item specified under this Division, including but not limited to:
   1. Electrical equipment nameplates.
   2. Property Identification Labels for Equipment.
   3. Panelboard directories.
   4. Wire and cable identification.
   5. Buried electrical line warnings.
   6. Junction box identification.
   7. Warning and caution signs.
   8. Inscribed device coverplates.

B. Related Work: Consult all other Sections, determine the extent and character of related Work and properly coordinate Work specified herein with that specified elsewhere to produce a complete installation.
   1. Division 09: Painting.

1.02 SUBMITTALS

A. Submit in accordance with the requirements of Section 260010: Basic Electrical Requirements, the following items:
   1. Data/catalog cuts for each product and component specified herein.
   2. Schedules for nameplates to be furnished.
   3. Sample of each type of label, nameplate, tag, etc. Samples shall be reviewed and approved by the University prior to release.

PART 2 - PRODUCTS

2.01 MANUFACTURERS

A. Products furnished by the following Manufacturers shall be acceptable if in compliance with all features specified herein and indicated on the Drawings.
   1. Conduit and wire markers:
      a. Thomas & Betts Corp.
      b. Brady.
      c. Griffolyn.
   2. Inscription Tape:
      a. Kroy.
      b. Merlin.

B. Substitutions: Under provisions of Section 260010: Basic Electrical Requirements.

2.02 NAMEPLATES

A. Type NP: Engraved, plastic laminated labels, Signs and Instruction Plates. Engrave stock melamine plastic laminate 1/16-inch minimum thickness for signs up to 20 square inches or 8 inches in length; 1/8 inch thick for larger sizes. Engraved nameplates shall have white letters and be punched for mechanical fasteners.

B. Color and letter height as specified in Part 3: Execution.

2.03 LEGEND PLATES

A. Type LP: Die-stamped metal legend plate with mounting hole and positioning key for panel mounted operator devices, i.e. motor control pilot devices, hand-off-auto switches, reset buttons, etc.

B. Stamped characters to be paint filled.

2.04 BRASS TAGS

A. Type BT: Metal tags with die-stamped legend, punched for fastener.

B. Dimensions: 2" diameter 19 gauge.

2.05 PROPERTY IDENTIFICATION LABELS FOR EQUIPMENT

1. Provide labels for equipment tracking per University Standards.

2.06 PANELBOARD DIRECTORIES (400 AMP OR LESS)

A. Directories: A 6" x 8" minimum size circuit directory frame and card with clear plastic covering shall be provided inside the inner panel door.

B. Circuit numbering: Starting at the top, odd numbered circuits in sequence down the left hand side and even numbered circuits down the right hand side. Multi-section panelboards shall have continuous consecutive circuit numbers, i.e. Section 1 (circuit numbers 1-42), Section 2 (circuit numbers 43-84), Section 3 (circuit numbers 85-126).

2.07 WIRE AND TERMINAL MARKERS

A. Provide self-adhering, pre-printed, machine printable or write-on, self-laminating vinyl wrap around strips. Blank markers shall be inscribed using the printer or pen recommended by Manufacturer for this purpose.

2.08 UNDERGROUND CONDUIT MARKER

A. 6-inch wide, yellow polyethylene tape, with continuous black imprinting reading "Caution - Buried Electric Line Below".

2.09 INSCRIBED DEVICE COVERPLATES

A. Coverplate material shall be as specified in Section 262726: Wiring Devices.

B. Methods of inscription: (Unless otherwise noted)

1. Engraving:
    a. Thermoplastic engraved legend, white background with black letter.
    b. 0.5" high x 1.5" wide label with 0.25" letters.

PART 3 - EXECUTION

3.01 EXAMINATION

A. Contractor shall thoroughly examine Project site conditions for acceptance of identification device installation to verify conformance with Manufacturer and Specification tolerances. Do not commence with installation until all conditions are made satisfactory.

3.02 NAMEPLATES

A. Installation:

1. Degrease and clean surfaces to receive nameplates.
2. Install nameplates parallel to equipment lines.
3. Secure nameplates to equipment fronts using machine screws.

B. Provide type 'NP' color coded nameplates that present, as applicable, the following information:

1. Equipment or device designation:
    a. Equipment designations shall conform to the following:
        1) Power source:
            a) Normal - __
            b) Emergency – E
            c) UPS – U
        2) Floor number where equipment is located – 3
        3) Equipment description:
            a) 277/480 volt Main switchboard – MDBH
            b) 277/480 volt distribution board –DBH
            c) 277/480 volt panelboard – H
            d) 120/208 volt distribution board – DBL
            e) 120/208 volt panelboard – L
            f) Transformer – TX
        4) Equipment designation – B
    b. Example: E2DBHA
        1) Emergency source.
        2) 2nd floor.
        3) 277/480 volt distribution board.
        4) Board designation A
2. Amperage, KVA or horsepower rating, where applicable.
3. Voltage or signal system name.
4. Source of power or control.
5. Examples:

a. Boards: E2DBHA; 1200A; 277/480V, 3PH, 4W; Served from: ATS1A
b. Transformers: ETX2A; 150KVA; 480V pri. - 120/208V, 3PH, 4W sec.; Served from: E2DBHA; Load Served: E2LA
c. Disconnects or Individual Motor Starters: EF-1; 20HP; 480V,3PH,3W; Served from E2DBHA
d. Signal: STB3C; Public Address System; Served from STB2C

C. Nameplates for power system distribution equipment and devices are to be black.
D. Nameplates for signal systems equipment and devices are to be black except as follows:
1. Fire alarm and life safety - Red.
2. Security/card access/CCTV systems - Green.
3. Clock, intercom, sound, MATV, CATV - Blue.
E. Minimum letter height shall be as follows:
1. For panelboards, switchboards, battery panels motor control center, etc.: ½ inch letters to identify equipment designation. Use ¼ inch letters to identify voltage, phase, wires, etc.
2. For individual circuit breakers, switches and motor starters in panelboards, switchboards and motor control centers use 3/8-inch letters to identify equipment designation. Use 1/8-inch letters to identify all other.
3. For individual mounted circuit breakers, disconnect switches, enclosed switches and motor starters use 3/8-inch letters to identify equipment designation. Use 1/8" letters to identify all other.
4. For transformers use 1/2 inch letters to identify equipment designation. Use ¼ inch letters to identify primary and secondary voltages, etc.
5. For equipment cabinets, terminal cabinets, control panels and other cabinet enclosed apparatus use 3/8-inch letters to identify equipment designation.

3.03 LEGEND PLATES

A. Provide panel-mounted operators devices such as pilot lights, reset buttons, “HAND-OFF-AUTO” switches, etc.

3.04 BRASS TAGS

A. Provide type BT tags for individual ground conductors to exposed ground bus indicating connection i.e. "UFER", "Cold water bond", etc.
B. Provide tags for all feeder cables in underground vaults and pull boxes.
C. Provide tags for empty conduits in underground vault, pull boxes and stubs.

3.05 PANELBOARD DIRECTORIES (400 AMP OR LESS)

A. Provide typewritten directories arranged in numerical order denoting loads served by room number or area for each circuit.
B. Verify room numbers or area designation with Project Manager.
C. Mount panelboard directories in a minimum 6" x 8" metal frame under clear plastic cover inside every panelboard.

3.06 WIRE AND CABLE IDENTIFICATION

A. Provide wire markers on each conductor (grounded and ungrounded conductors) in panelboards, pull boxes, outlet and junction boxes and at load connection. Identify with branch circuit or feeder number for power and lighting circuits and with control wire number as indicated on equipment Manufacturer's Shop Drawings for control wiring.

3.07 UNDERGROUND CONDUIT MARKERS

A. During trench backfilling, for exterior underground power, signal and communications lines, install continuous underground plastic line marker, located directly above line at 6 to 8 inches below finished grade. Where multiple lines installed in a common trench or concrete envelope, do not exceed an overall width of 16 inches; install a single line marker.

3.08 JUNCTION BOX IDENTIFICATION

A. Concealed Locations: The cover of junction, pull and connection boxes for both power and signal systems, located above suspended ceilings and below ceilings in non-public areas, shall be clearly marked with a permanent ink felt pen. Identify the circuit(s) (panel designation and circuit numbers) contained in each box, unless otherwise noted or specified.
B. Exposed Locations: Provide a thermoplastic engraved legend with white letters on black background on the cover of junction, pull and connection boxes for both power and signal

systems. Identify the circuit(s) (panel designation and circuit numbers) contained in each box, unless otherwise noted or specified. Adhere the legend to the cover utilizing 30 year silicone adhesive.

3.09 WARNING, CAUTION AND INSTRUCTION SIGNS

A. Provide warning, caution or instruction signs where required by NEC, where indicated or where reasonably required to assure safe operation and maintenance of electrical systems and of the items to which they connect. Install engraved plastic laminated instruction signs with approved legend where instructions or explanations are needed for system or equipment operation. Install butyrate signs with metal backing for outdoor items.
B. Emergency Operating Signs: Install engraved laminate signs with white letters on red background with minimum 3/8 inch high lettering for emergency instructions on power transfer, load shedding or other emergency operations.
C. Elevator Machine Rooms(s): Provide warning sign for each elevator controller disconnect to read "Warning - Part of the Control Panel is not De-energized by this Switch."
D. Elevator car light and fan switch: Provide signage indicating elevator number serving and function of each switch.

3.10 INSCRIBED DEVICE COVERPLATE

A. General:
   1. Lettering type: Helvetica, 0.25" high.
   2. Color of characters shall be black on white.
   3. Locate the top of the inscription ½" below the top edge of the coverplate.
   4. Inscription shall be centered and square with coverplate.
B. Provide inscribed legend, , as applicable, the following information:
   1. Panel and circuit designation. For example, 1LA 2 (Panel 1LA, circuit 2).
C. Application:
   1. Provide inscribed legend on coverplates for devices as outlined below:
      a. Receptacles.
      b. Outlets in surface raceways.
      c. Multi-ganged (four or more) switch arrangement.
      d. Special purpose switches, i.e. projection screens, shades, exhaust fans, etc.
      e. Telecommunication outlets.
   2. Engraved legend installation:
      a. Affix legend to coverplate using 30 year silicone adhesive.

END OF SECTION

SECTION 26 22 13

DRY TYPE TRANSFORMERS

PART 1 - GENERAL

1.01 SUMMARY

A. Work included: Labor, materials and equipment necessary to complete the installation required for the item specified under this Division, including but not limited to:

1. Dry type isolation transformers.

B. Related Work: Consult all other Sections, determine the extent and character of related Work and properly coordinate Work specified herein with that specified elsewhere to produce a complete installation.

1. Division 03: Cast-in-place concrete. Equipment housekeeping pad.
2. Division 09: Painting. Touch-up painted surfaces.

1.02 REFERENCES

A. Comply with the latest edition of the following applicable Specifications and standards except as otherwise indicated or specified.

1. American National Standards Institute (ANSI):

ANSI C57;	Pertaining to Power/Distribution Transformer.

2. Underwriter's Laboratories, Inc. (UL):

UL 486E;	Equipment Wiring Terminals for Use with Aluminum and/or Copper Conductors.
UL 506;	Specialty Transformers.
UL 1047;	Isolated Power Systems Equipment.
UL 1561;	Dry-Type General Purpose and Power Transformers.

3. National Electrical Manufacturers Association (NEMA):

NEMA ST 1;	Specialty Transformers.
NEMA ST 20;	Dry Type Transformers.

4. U.S. Department of Energy

2016 Energy Efficiency Standards	Low Voltage Distribution Transformers.

1.03 SUBMITTALS

A. Submit in accordance with the requirements of Section 260010: Basic Electrical Requirements, the following items:

1. Data/catalog cuts for each product and component specified herein, listing all physical and electrical characteristics and ratings indicating compliance with all listed standards.
2. Clearly mark on each data sheet the specific item(s) being submitted and the proposed application.
3. Shop Drawings: Include type and style, dimensions, insulation class, rated temperature rise, taps provided, voltage, kVA and impedance ratings and characteristics, loss data, efficiency at 25, 50, 75 and 100 percent rated load and sound level.
4. Furnish structural calculations for equipment anchorage as described in Section 260010: Basic Electrical Requirements.

5. Submit Manufacturer's installation instructions.
6. Final test results.
7. Warranty.

1.04 OPERATION AND MAINTENANCE MANUAL

A. Supply operation and maintenance manuals in accordance with the requirements of Section 260010: Basic Electrical Requirements, to include the following:

1. Detailed explanation of operation of the system.
2. Instructions for routine maintenance.
3. Telephone numbers for the authorized parts and service distributors.
4. Include all service bulletins and torque Specifications for all terminations.
5. Final testing reports.

1.05 QUALITY ASSURANCE

A. All materials, equipment and parts comprising the units specified herein shall be new, unused and currently under production.

B. Only products and applications listed in this Section may be used on the Project unless otherwise submitted.

C. Independent Testing Agency qualifications: Refer to Section 260010: Basic Electrical Requirements.

1.06 PRODUCT DELIVERY, STORAGE AND HANDLING

A. Delivery: Transformers shall not be delivered to the Project site until protected storage space is available. Storage outdoors covered by rainproof material is not acceptable. Equipment damaged during shipment shall be replaced and returned to Manufacturer at no cost to Owner. Components shall be properly packaged in factory-fabricated containers and mounted on shipping skids.

B. Storage: Store in a clean, dry, ventilated space free from temperature extremes. Maintain factory wrapping or provide a heavy canvas/plastic cover to protect units from dirt, water, construction debris and traffic. Provide heat where required to prevent condensation.

C. Handling: Handle in accordance with Manufacturer's written instructions. Be careful to prevent internal component damage, breakage, denting and scoring. Damaged units shall not be installed. Replace damaged units and return equipment to Manufacturer.

1.07 WARRANTY

A. Units and components offered under this Section shall be covered by a 1 year parts and labor warranty for malfunctions resulting from defects in materials and workmanship. Warranty shall begin upon acceptance by the Owner.

1.08 EXTRA MATERIAL

A. Provide one spray can of matching finish paint for touching up damaged surfaces after installation.

PART 2 - PRODUCTS

2.01 MANUFACTURERS

A. Products furnished by the following Manufacturers shall be acceptable if in compliance with all features specified herein and indicated on the Drawings.

1. Square D.

2. Eaton Electrical/Cutler-Hammer.
3. General Electric.
4. Siemens/I-T-E.

B. Substitutions: Under provisions of Section 260010: Basic Electrical Requirements.

2.02 DRY TYPE TRANSFORMER - GENERAL

A. Rating: Provide kVA rating, primary and secondary voltage, frequency and phase as indicated on the Drawings. The designated rating is for continuous duty without the use of cooling fans unless specifically noted otherwise on the Drawings.

B. Windings: Three phase dry type transformers shall be of the two-winding type.

C. Taps: All dry type transformers rated 15 kVA and larger shall have two 2 1/2 percent full capacity taps above normal (FCAN) and four 2 1/2 percent full capacity taps below normal (FCBN) rated primary voltage.

D. Noise attenuation:

1. Isolate core and coil unit from the enclosure by means of vibration absorbing mounts that preclude metal-to-metal contact between the core-coil and the enclosure.
2. Provide sound levels that do not exceed the following maximum levels in accordance with NEMA and ANSI standards:
   a. Up to 9 kVA; 0 db
   b. 10 to 50 kVA; 45 db
   c. 51 to 150 kVA; 50 db

E. Impedance:

1. Transformer impedance shall conform to NEMA standards. Do not use low impedance type transformers unless the circuits and equipment affected by the larger short circuit currents through such transformers are increased in short circuit current ratings, as required, at no additional cost to the Owner.
2. The following impedance are used as our basis of design:
   a. Three phase transformers:
      1) 15 kVA: 6.4Z
      2) 25 kVA: 5.8Z
      3) 30 kVA: 5.2Z
      4) 37.5 kVA: 5.5Z
      5) 45 kVA: 5.0Z
      6) 75 kVA: 4.7Z
      7) 112.5 kVA: 5.1Z

F. Basic impulse level (BIL): 10 kV for transformers less than 300 kVA.

G. Energy efficiency: Transformers rated 15 kVA and larger shall be energy efficient designs and DOE2016 compliant. The energy efficient transformers shall be specifically designed to meet the energy efficiency standards set forth by the U.S. Department of Energy 2013-04-18 Energy Conservation Standards for Distribution Transformers; Final Rule.

1. Three phase transformer efficiency:
   a. 15 kVA: 97.89%

b. 30 kVA: 98.23%

c. 45 kVA: 98.40%

d. 75 kVA: 98.60%

e. 112.5 kVA: 98.74%

H. Grounding: Ground core and coil assembly to enclosure by means of a visible flexible copper strap.

I. Enclosures:

1. Material: Code gauge steel.

2. Manufacturers nameplate: Include transformer connection data and overload capacity based on rated allowable temperature rise.

3. Type: Provide NEMA type as indicated on Drawings or specified herein, drip-proof, self-bracing enclosure designed to prevent accidental contact with electrically energized parts unless otherwise noted.

4. Mounting: Transformers 75 kVA and less shall be suitable for wall, floor, frame or trapeze mounting. Transformers larger than 75 kVA shall be suitable for floor mounting.

5. Finish: Clean, degrease, zinc-phosphate, prime and finish paint steel parts with a baked-on synthetic enamel, ANSI 61 (light gray).

6. Accessories: Provide accessories as indicated on the Drawings.

7. Size: Dimensions and configurations shall conform to the spaces allocated on the Drawings.

2.03 DRY TYPE ISOLATION TRANSFORMERS

A. General:

1. Convection air-cooled, electrostatically shielded, dry type isolation transformers within the integrated gear NEMA 3R enclosure.

2. Transformers shall have been tested to UL standards and constructed to NEMA standards.

3. Transformers shall be specifically designed to supply circuits with a harmonic profile equal to or less than a K-factor of 13 without exceeding the rated temperature rise.

B. Windings:

1. Transformers electrostatic shield consisting of a single turn copper winding placed between the primary and secondary windings with separate insulated grounding connection to prevent electrical noise transmission through inter-winding capacitor coupling.

2. Windings shall be constructed to withstand the mechanical forces associated with SCR drive duty cycles and to isolate the line from most SCR generated voltage spikes and transients.

C. Insulation:

1. Insulation system and average winding temperature rise for rated kVA as follows unless otherwise indicated:

KVA RATING	CLASS H	RISE IN DEGREES
15 - 500	220c	150c

2. Case temperature shall not exceed 40 degrees centigrade rise above ambient at its warmest point.

3. Provide insulating materials that are in accordance with the latest addition of NEMA ST20 Standards for a 220-degree centigrade, UL component recognized insulation system.

D. Core construction: High grade, non-aging, silicon steel, clamped with structural angles and bolted to the transformer enclosure on vibration isolating pads.

E. Coil construction:

1. Continuous wound with copper wire, without splices except for taps.
2. Pressure type, primary, secondary and tap connections.
3. End fillers or tie downs for maximum strength.
4. Vacuum impregnated with non-hygroscopic, thermosetting varnish.
5. All connections shall be accessible from the front of the transformer to allow position of rear of transformer within six inches of the adjacent wall.
6. Isolate core and coil from enclosure using vibration-absorbing mounts.

PART 3 - EXECUTION

3.01 EXAMINATION

A. Contractor shall thoroughly examine Project site conditions for acceptance of transformer installation to verify conformance with Manufacturer and Specification tolerances. Do not commence with installation until all conditions are made satisfactory.

3.02 PREPARATION

A. Ensure all conduit stub-ups for bottom entry into transformer are in place and located as required per Shop Drawings.

B. Provide a 4 inch high concrete housekeeping pad beneath equipment. Coordinate actual sizes of equipment base with approved Shop Drawings and extend pad 4 inches in all directions beyond overall dimension of base. Provide reinforcing bars as required structurally within pad to ensure proper support of equipment.

3.03 INSTALLATION

A. Install transformer in accordance with Manufacturer's written instructions, as indicated on the Drawings and as specified herein.

B. Transformers shall be installed to provide adequate air circulation for the removal of the heat they produce, in accordance with Manufacturer recommendations.

C. Transformers not specifically designed for wall mounting, shall be spaced a minimum of 6" from adjacent walls, ceiling and equipment.

D. Transformers shall be anchored and braced to withstand seismic forces as calculated per Section 260010: Basic Electrical Requirements.

E. Loosen and/or remove all shipping bolts in accordance with Manufacturer's instructions.

F. Install the transformers on the noise and vibration isolation pads designed to suppress the transformer noise from the building structure. Select and arrange the pads in accordance with the weight and mounting of the transformers. These pads are in addition to any internal vibration pads. Provide a neoprene sleeve over the portion of the bolt that passes through the transformer base or mounting bracket. Provide a rubber washer between the bolt head and the mounting channel. Use Kinetics Model KIP or equal.

3.04 TERMINATIONS

A. Provide all transformers with lugs for both primary and secondary conductor sizes for conductors indicated on Drawing. Connect lug to termination point with appropriate size bolt, nut flat and Belleville washers.

B. Provide high-pressure compression lugs, for primary and secondary phase and neutral terminations for transformers 45 kVA and larger. Utilize only the tool and dies designed for uses in installing the lugs provided.

C. Use flexible conduit indoors in dry locations or liquidtight flexible conduit in damp/wet locations, two-foot minimum in length, for primary and secondary connections to transformer case. Make connections to side panels of enclosure, except for floor mounted transformers fed from directly below enclosure.

3.05 GROUNDING

A. Provide transformer with a dual rated four-barrel solderless grounding lug with a 5/8"-11 threaded hole. Drill transformer enclosure with 11/16" bit and attach lug to enclosure utilizing a torque bolt and Dragon Tooth transition washer. Connect the following:

1. Primary feeder ground.
2. Secondary feeder ground.
3. Grounding electrode.
4. Main bond jumper to neutral (when present).

3.06 IDENTIFICATION

A. Provide transformer nameplate as described in Section 260533: Electrical Identification.

3.07 FIELD QUALITY CONTROL

A. Independent testing: Contractor shall arrange and pay for the services of an independent Testing Agency to perform all quality control electrical testing, calibration and inspection required herein. Independent Testing Agency shall meet the requirements as outlined in Section 260010: Basic Electrical Requirements. Testing Agencies objectives shall be to:

1. Assure transformer installation conforms to specified requirements and operates within specified tolerances.
2. Field test and inspect to ensure operation in accordance with Manufacturer's recommendations and Specifications.
3. Prepare final test report including results, observations, failures, adjustments and remedies.
4. Apply label on transformer upon satisfactory completion of tests and results.
5. Verify ratings and settings and make final adjustments.

B. At least three weeks prior to any testing, notify the Engineer so that arrangement can be made for witnessing test, if deemed necessary. All pretesting shall have been tested satisfactorily prior to the Engineer's witnessed test.

C. The Contractor shall supply a suitable and stable source of electrical power to each test site. The Testing Agency shall specify the specific power requirements.

D. Prefunctional testing:

1. Provide Testing Agency with Contract Documents and Manufacturer instructions for installation and testing.
2. Visual and mechanical inspection:
    a. Compare nameplate information and connections to Contract Documents.
    b. Inspect for physical damage, defects alignment and fit.
    c. Check tightness of all control and power connections.
    d. Check that all covers, barriers and doors are secure.

e. Perform specific inspections and mechanical tests as recommended by Manufacturer.

f. Verify seismic bracing is correct.

g. Verify winding core, frame and enclosure grounding are correct.

h. Verify tap connections are as specified.

3. Electrical tests:

a. Perform insulation-resistance tests winding-to-winding and winding-to-ground with test voltage in accordance with Manufacturer's recommendation.

b. Calculate polarization index.

c. Perform power-factor or dissipation-factor tests in accordance with test equipment Manufacturer's instructions.

d. Perform turn-ratio test on tap connections. Verify winding polarities are in accordance with nameplate.

e. Perform an excitation-current test on each phase.

f. Measure resistance of each winding at each tap.

g. Verify core is solidly grounded. If core is insulated and removable core ground strap is available, perform core insulation-resistance test at 500V DC.

h. Verify correct secondary voltage phase-to-phase and phase-to-neutral after energization and prior to loading.

i. Perform over-potential test on all high and low voltage windings-to-ground.

4. Test values:

a. Bolt-torque levels shall be in accordance with the Manufacturer's written instructions.

b. Insulation-resistance test values at one minute should not be less than 500 megohms at 1000 VDC.

c. Polarization index should be compared to Manufacturer's factory test results. If Manufacturer's data is not available, acceptance test results will serve as baseline data.

d. Turn-ratio test results should not deviate more than 0.5% from either adjacent coils or calculated ratio.

e. Dissipation-factor/power-factor values should be 5% or less.

f. If winding-resistance test results vary more than 1% from adjacent windings, consult Manufacturer.

g. Typical excitation current test data pattern for three-legged core transformer is two similar current readings and one lower current reading.

h. If core insulation resistance is less than one megohm at 500 VDC, consult Manufacturer.

i. AC over-potential test shall not exceed 75% of factory test voltage for one minute duration. DC over-potential test shall not exceed 100% of factory RMS test voltage for one minute duration. Insulation shall withstand over-potential test voltage applied.

E. Contractor shall replace at no costs to the Owner all devices which are found defective or do not operate within factory specified tolerances.

F. Contractor shall submit the Testing Agency's final report for review prior to Project closeout and final acceptance by the Owner. Test report shall indicate test dates, devices tested,

results, observation, deficiencies and remedies. Test report shall be included in the operation and maintenance manuals.

3.08 ADJUSTING

A. Adjust primary taps so that secondary voltage is above and within 2 percent of rated voltage.

3.09 CLEANING

A. Prior to energizing of transformer the Contractor shall thoroughly clean the interior of enclosure of all construction debris, scrap wire, etc. using Manufacturer's approved methods and materials.

B. Upon completion of Project prior to final acceptance the Contractor shall thoroughly clean both the interior and exterior of transformer per Manufacturers approved methods and materials. Remove paint splatters and other spots, dirt and debris.

C. Touch-up paint any marks, blemishes or other finish damage suffered during installation.

END OF SECTION

SECTION 262416

PANELBOARDS

PART 1 - GENERAL

1.01 SUMMARY

A. Work included: Labor, materials and equipment necessary to complete the installation required for the item specified under this Division, including but not limited to:
   1. Branch circuit panelboards.
   2. Distribution panelboards (400 amps to 800 amps).

B. Related Work: Consult all other Sections, determine the extent and character of related Work and properly coordinate Work specified herein with that specified elsewhere to produce a complete installation.

1.02 REFERENCES

A. Comply with the latest edition of the following applicable Specifications and standards except as otherwise indicated or specified.
   1. Federal Specifications (FS):
      FS W-C-375; Circuit Breakers, Molded Case, Branch Circuit and Service.
      FS W-P-115; Power Distribution Panel.
   2. National Electrical Manufacturers Association (NEMA):
      NEMA AB 1; Molded Case Circuit Breakers.
      NEMA PB 1; Panelboards.
      NEMA PB 1.1; Instructions for safety instruction, operation and maintenance of panelboard rated 600 volts or less.
   3. Underwriters Laboratories, Inc. (UL):
      UL 67; Panelboards.
      UL 486E; Equipment Wiring Terminals for Use with Aluminum and/or Copper Conductors.
      UL 489; Molded-Case Circuit Breakers, Molded-Case Switches and Circuit Breaker Enclosures.
      UL 870; Wireways, Auxiliary Gutters and Associated Fittings.

1.03 SUBMITTALS

A. Submit in accordance with the requirements of Section 260010: Basic Electrical Requirements, the following items:
   1. Data/catalog cuts for each product and component specified herein, listing all physical and electrical characteristics and ratings indicating compliance with all listed standards
   2. Clearly mark on each data sheet the specific item(s) being submitted and the proposed application.
   3. Shop Drawings: Include elevations, cabinet dimensions, gutter sizes, layout of contactors, relays, time clocks, lug sizes, bussing diagrams; make, location and capacity of installed equipment; mounting style; finish and panelboard nameplate inscription.
   4. Furnish structural calculations for equipment anchorage as described in Section 260010: Basic Electrical Requirements.
   5. Submit Manufacturer's installation instructions.
   6. Complete bill of material listing all components.
   7. Warranty.

B. Dimensions and configurations of panelboards shall conform to the spaces allocated on the Drawings for their installation. The Contractor shall include with the submittal a layout of the electrical room if it differs from construction documents for review and approval by the Engineer prior to release of order.

1.04 OPERATION AND MAINTENANCE MANUAL

A. Supply operation and maintenance manuals in accordance with the requirements of Section 260010: Basic Electrical Requirements, to include the following:
   1. A detailed explanation of the operation of the system.
   2. Instructions for routine maintenance.

3. Pictorial parts list and parts number.
4. Telephone numbers for authorized parts and service distributors.
5. Final testing reports.

1.05 QUALITY ASSURANCE

A. All materials, equipment and parts comprising the units specified herein shall be new, unused and currently under production.

B. Only products and applications listed in this Section may be used on the Project unless otherwise submitted.

1.06 PRODUCT DELIVERY, STORAGE AND HANDLING

A. Delivery: Panelboard components shall not be delivered to the Project site until protected storage space is available. Storage outdoors covered by rainproof material is not acceptable. Equipment damaged during shipment shall be replaced and returned to Manufacturer at no cost to Owner.

B. Storage: Store in a clean, dry, ventilated space free from temperature extremes. Maintain factory wrapping or provide a heavy canvas/plastic cover to protect units from dirt, water, construction debris and traffic. Provide heat where required to prevent condensation.

C. Handling: Handle in accordance with NEMA PB1.1 and Manufacturer's written instructions. Be careful to prevent internal component damage, breakage, denting and scoring. Damaged units shall not be installed. Replace damaged units and return equipment to Manufacturer.

1.07 WARRANTY

A. Units and components offered under this Section shall be covered by a 1 year parts and labor warranty for malfunctions resulting from defects in materials and workmanship. Warranty shall begin upon acceptance by the Owner.

1.08 EXTRA MATERIAL

A. Turn over two (2) sets of panelboard keys to the Owner at completion of Project. All panelboards shall be keyed alike.

B. Provide one spray can of matching finish paint for touching up damaged surfaces after installation.

PART 2 - PRODUCTS

2.01 MANUFACTURERS

A. Products furnished by the following Manufacturers shall be acceptable if in compliance with all features specified herein and indicated on the Drawings.
1. Eaton Electrical/Cutler-Hammer.
2. General Electric.
3. Siemens/I-T-E.
4. Square D.

B. Substitutions: Under provisions of Section 260010: Basic Electrical Requirements.

2.02 PANELBOARDS - GENERAL

A. Equipment operating over 225A or over 150V phase to ground shall be provided such that circuit breakers can be installed and removed without the use of or having to contract line-side hardware (nuts, bolts or screws). Installation and/or removal of circuit breaker shall not impact other breakers in the switchboard.

B. Branch circuit breakers that operate in panelboards that are operating at less that 150V phase to ground and less than or equal two 225A shall have trip indication. Trip indication shall be readily visible denoting the breaker in the tripped position by use of a visual fluorescent or contrasting flag, led or other high contrast method of indicating the interrupted circuit.

C. Enclosure:
1. Cabinets shall be NEMA Type 1 enclosure, door and trim of code gauge galvanized steel.
2. Panelboard covers shall be door-in-door construction such that inner door exposes the overcurrent protective devices and the outer door exposes the complete panelboard interior (i.e. branch circuit conductors, lugs, neutral and ground bus, overcurrent protective devices, etc.). Outer door shall have full-length piano hinge and inner door shall have two-point hinges.
3. Provide combination spring catch and lock on inside edge of the inner door trims with flush fitting joint between door and trim. Locks on all panelboards shall be keyed alike.

Doors 36 inches and over in height shall be provided with three-point catch and lock. Provide quarter-turn captive bolts on the outer door.

4. Riser gutter shall be sized for feeder and requirements of NEC. Refer to feeder schedule on Drawings for conductor sizes and quantities.

D. Bus assembly and terminations:
   1. Bus shall be bolted copper with taps arranged for distributed phase connections to branch circuit devices
   2. Cross connectors shall be copper, drilled and tapped for bolt-on device connections, arranged for double row placement of device and designed to permit removal or addition of overcurrent protection devices without disturbing adjacent devices or removing main bus connections.
   3. Neutral bus shall be 100or200 percent rated of phase bus bars and shall have lugs for each outgoing branch circuit or feeder requiring a neutral connection unless otherwise noted.
   4. Ground bus shall be full size with lugs for each outgoing branch circuit and feeder. .
   5. Refer to panelboard schedules on Drawingsfor bus rating. Bus rating shall match or be greater than main device or main lug rating.
   6. As a minimum, bus bars shall be rated 10,000AIC for 120/208 volt panelboards and 14,000AIC for 277/480 volt panelboards. Unless otherwise noted. Series rated breakers are not acceptable unless specifically noted on the Drawings.
   7. Provide full sized bussing in all sections of multi-section panelboards.
   8. No panelboard section shall have greater than 42 poles.
   9. Termination Lugs: Rated for use with aluminum/copper conductors.
   10. All "SPACES" shall be ready for installation of future overcurrent protective device.

E. Miscellaneous requirements:
   1. Circuit numbering: Starting at the top, indicate odd numbered circuits in sequence down the left hand side and even numbered circuits down the right hand side. Multi-section panelboards shall have continuous consecutive circuit numbers, i.e. Section 1 (circuit numbers 1-42), Section 2 (circuit numbers 43-84), Section 3 (circuit numbers 85-126). Provide metal embossed circuit identification of panelboards.
   2. Directories: A 6" x 8" minimum size circuit directory frame and card with clear plastic covering shall be provided inside the inner panelboard door to reflect conditions at completion of Work. Directory shall be typewritten denoting loads served by room number or area for each circuit. The directory shall accurately describe the load being served. Verbatim load descriptions for multiple circuits is not acceptable.
   3. Nameplates: Provide engraved nameplate for each panelboard. See Section 260533: Electrical Identification for requirements.

F. Refer to Panelboard Schedules for the following:
   1. Mounting style; service voltage; terminal lug size, location and quantity; bus ampacity; interrupting capacity of bus and breakers; quantity, poles and rating of overcurrent protective devices.

G. Overcurrent protective devices:
   1. Refer to Section 262816: Overcurrent Protection Devices.
   2. Overcurrent protective devices shall be molded case circuit breakers.
   3. Main devices shall be hard bus connected to the panelboard bus bars.
   4. In all cases, panelboards fed directly from a transformer shall have a main overcurrent protective device. If not indicated on the Drawings or Panelboard Schedules, provide this device sized to provide the full capacity of the transformer rating.
   5. Main devices shall be vertically mounted and shall have their operating handle in the up position when energized. Main devices that are mounted in the same manner as the branch devices are NOT acceptable; i.e. main devices shall be individually mounted at the top or bottom of the phase bus bars.
   6. Panelboards overcurrent protective devices layout shall conform to the layout indicated on the panelboard schedules.
   7. Provide handle ties for single pole circuit breakers that share a neutral conductor.

H. Finish: Five step zinc phosphate pre-treatment, one coat of rust inhibiting dichromate primer and one coat of baked-on enamel finish, ANSI 61 (light gray).

2.03 DISTRIBUTION PANELBOARDS

A. Enclosures shall be sized as required and shall meet the space restriction allocated on Drawings. Panelboard shall comply with NEMA PS 1 and FS W-P-115.
B. Provide necessary hardware to permit locking every overcurrent protective device handle in the "OFF" position.
C. Where "SPACE" is indicated on panelboard schedules or Drawings, install cross connectors and mounting hardware to match the frame size ampere rated noted.

2.04 BRANCH CIRCUIT PANELBOARDS

A. Enclosure shall be 20" wide x 5-3/4" deep, surface or flush mounted and shall comply with NEMA PB 1 and FS W-P-115.
B. Flush panelboards mounted adjacent to each other shall be same physical size.
C. Where "SPACE" is indicated on panelboard schedules or Drawings, install minimum 100-ampere branch circuit cross connectors and mounting hardware. For future device spaces larger than 100 amps, cross connectors shall match the frame size ampere rated noted.

PART 3 - EXECUTION

3.01 EXAMINATION

A. Contractor shall thoroughly examine Project site conditions for acceptance of panelboard installation to verify conformance with Manufacturer and Specification tolerances. Do not commence with installation until all conditions are made satisfactory.

3.02 INSTALLATION

A. Install panelboards in accordance with Manufacturer's written instructions, as indicated on the Drawings and as specified herein.
B. Set panels plumb and symmetrical with building lines in conformance with PB1.1. Furnish and install all construction channel bolts, angles, etc., required to mount the equipment furnished under this Section.
C. Mounting height shall be 6 feet.
D. Panelboards shall be anchored and braced to withstand seismic forces as calculated per Section 260010: Basic Electrical Requirements.
E. Provide mounting hardware brackets, busbar drillings and filler pieces for all unused spaces.
F. "Train" interior wiring; bundle and clamp, using specified plastic wire wraps specified under Section 260519: Building Wire and Cable.
G. Replace panel pieces, doors or trim exhibiting dents, bends, warps or poor fit that may impede ready access, security or integrity.
H. Conduits terminating in concentric, eccentric or oversized knockouts at panelboards shall have ground bushings and bonding jumpers installed interconnecting all such conduits and the panelboard.
I. Check and tighten all bolts and connections with a torque wrench using Manufacturer's recommended values.
J. Provide one 3/4" spare conduits per 3 available circuit breaker spaces stubbed-out of flush mounted panelboards to nearest accessible ceiling space.
K. Visually inspect panelboard for rust and corrosion. If signs of rust and corrosion are present, restore or replace panelboard to new condition.
L. In damp and wet locations, mount panelboards with a minimum one inch of air space between cabinet and the wall or other support material.
M. Provide close up plugs in all unused openings in the cabinet.
N. Field install handle ties on single pole circuit breakers that share a neutral conductor.
O. Circuit breakers feeding "Fire Alarm Control Panel(s)" shall be red in color.

3.03 FIELD QUALITY CONTROLS

A. Independent testing: Contractor shall arrange and pay for the services of an independent Testing Agency to perform all quality control electrical testing, calibration and inspection required herein. Testing Agencies objectives shall be to:
    1. Assure panelboard installation conforms to specified requirements and operates within specified tolerances.

2. Field test and inspect to ensure operation in accordance with Manufacturer's recommendations and Specifications.
3. Prepare final test report including results, observations, failures, adjustments and remedies.
4. Apply label on panelboards upon satisfactory completion of tests and results.
5. Verify ratings and settings and make final adjustments.

B. At least three weeks prior to any testing, notify the Engineer so that arrangement can be made for witnessing test, if deemed necessary. All pretesting shall have been tested satisfactorily prior to the Engineer's witnessed test.

C. The Contractor shall supply a suitable and stable source of electrical power to each test site. The Testing Agency shall specify the specific power requirements.

D. Testing of overcurrent protective devices shall be done only after all devices are installed and system is energized.

E. Perform testing per NETA ATS Standards.

F. Prefunctional testing:
1. Provide Testing Agency with Contract Documents and Manufacturer instructions for installation and testing.
2. Visual and mechanical inspection:
   a. Inspect for physical damage, defects alignment and fit.
   b. Perform mechanical operational tests in accordance with Manufacturer's instructions.
   c. Compare nameplate information and connections to Contract Documents.
   d. Check tightness of all power connections.
   e. Check that all covers, barriers and doors are secure.
3. Electrical tests:
   a. Insulation resistance: 1000 volt DC tests for one minute on all 600 volt and lower rated equipment, components, buses, feeder and branch circuits and control circuits. Test phase-to-phase and phase-to-ground circuits showing less than 10 megohms resistance to ground shall be repaired or replaced.
   b. Circuit continuity: All feeders shall be tested for continuity. All neutrals shall be tested for improper grounds.
   c. Ground resistance: Test resistance to ground of system and equipment ground connection.
   d. Test overcurrent protection devices per Section 262816: Overcurrent Protective Devices.

G. In the event that the system fails to function properly during the testing as a result of inadequate pretesting or preparation. The Contractor shall bear all costs incurred by the necessity for retesting including test equipment, transportation, subsistence and the Engineer's hourly rate.

H. Contractor shall replace at no costs to the Owner all devices which are found defective or do not operate within factory specified tolerances.

I. Contractor shall submit the Testing Agency's final report for review prior to Project closeout and final acceptance by the Owner. Test report shall indicate test dates, devices tested, results, observation, deficiencies and remedies. Test report shall be included in the operation and maintenance manuals.

3.04 CLEANING

A. Prior to energizing of panelboards the Contractor shall thoroughly clean the interior of enclosure of all construction debris, scrap wire, etc. using Manufacturer's approved methods and materials.

B. Upon completion of Project prior to final acceptance the Contractor shall thoroughly clean both the interior and exterior of panelboards per Manufacturers approved methods and materials. Remove paint splatters and other spots, dirt and debris.

C. Touch-up paint any marks, blemishes or other finish damage suffered during installation.

END OF SECTION

SECTION 262726

WIRING DEVICES

PART 1 - GENERAL

1.01 SUMMARY

A. Work included: Labor, materials and equipment necessary to complete the installation required for the item specified under this Division, including but not limited to:

1. Receptacles.
2. Coverplates.

B. Related Work: Consult all other Sections, determine the extent and character of related Work and properly coordinate Work specified herein with that specified elsewhere to produce a complete installation.

1. Division 03: Cast-in-place concrete.

1.02 REFERENCES

A. Comply with the latest edition of the following applicable Specifications and standards except as otherwise indicated or specified.

1. Federal Specification (FS):

FS W-P-455A;	Plate, Wall Electrical.
FS W-C-596;	Electrical Power Connector, Plug, Receptacle and Cable Outlet.

2. National Electrical Manufacturer's Association (NEMA):

NEMA WD-1;	General-Purpose Wiring Devices.
NEMA WD-5;	Specific-Purpose Wiring Devices.

3. Underwriter's Laboratories (UL):

UL 231;	Power Outlets.
UL 310;	Electrical Quick-Connect Terminals.
UL 498;	Attachment Plugs and Receptacles.
UL 514A;	Metallic Outlet Boxes.
UL 514D;	Cover Plates for Flush-Mounted Wiring Devices.
UL 943;	Ground-Fault Circuit-Interrupters.
UL 1681;	Wiring Device Configurations.

1.03 SUBMITTALS

A. Submit in accordance with the requirements of Section 260010: Basic Electrical Requirements, the following items:

1. Data/catalog cuts for each product and component specified herein, listing all physical and electrical characteristics and ratings indicating compliance with all listed standards.
2. Clearly mark on each data sheet the specific item(s) being submitted and the proposed application.
3. Provide color finishes for Architect to select from.
4. Submit Manufacturer's installation instructions.

B. Where inscribed device coverplates are noted on the Drawings or in the Specifications, conform to the requirements of Section 260553: Electrical Identification.

1.04 QUALITY ASSURANCE

A. All materials, equipment and parts comprising the units specified herein shall be new, unused and currently under production.

B. Only products and applications listed in this Section may be used on the Project unless otherwise submitted.

1.05 WARRANTY

A. Occupancy sensors offered under this Section shall be covered by a ***1*** one year parts and labor warranty for malfunctions resulting from defects in materials and workmanship. Warranty shall begin upon acceptance by the Owner.

PART 2 - PRODUCTS

2.01 MANUFACTURERS

A. Products furnished by the following Manufacturers shall be acceptable if in compliance with all features specified herein and indicated on the Drawings.

1. Receptacles and coverplates:

a. Hubbell.

b. Pass & Seymour.

c. Leviton.

B. Substitutions: Under provisions of Section 260010: Basic Electrical Requirements.

2.02 RECEPTACLES

A. Standards:

1. Provide general purpose 20 ampere, 125/250 VAC receptacles that conform to NEMA WD-1 Specifications. Specialty receptacles shall conform to NEMA WD-5 Specifications as applicable.

2. Provide NEMA 5-20R, industrial (heavy-duty) specification grade as noted herein, 20 amp, 125 VAC, 2 pole, 3 wire grounding type receptacles.

3. Receptacles shall be the standard conventional style device.

B. Color:

1. Device color shall be white , unless otherwise noted.

C. General purpose duplex receptacles:

1. Provide self-grounding, back and side wired with binding head staked terminal screws and break-off strip for two-circuit wiring.

2. Use Hubbell #5362 series, Pass & Seymour #5362 series or Leviton #5362 series.

D. Ground fault circuit interrupting (GFCI) receptacles:

1. Provide 20 amp, 125 VAC, receptacles consisting of NEMA 5-20R duplex device with integral solid state sensing and signaling circuitry capable of detecting and interrupting a maximum 5 milli-amp line-to-ground fault current in approximately 1/40th of a second.

2. Provide visual device with trip indication, manual reset and test mechanisms and with point of use and multi-outlet protection.

3. Use Pass & Seymour #2091-S series, Hubbell GF-5362 series, Leviton #6898 series, for Specification grade GFCI receptacles.

E. Isolated ground (IG) receptacles:

1. Provide 20 amp, 125 VAC, receptacles consisting of NEMA 5-20R duplex device with an isolated ground terminal.

2. Device color shall be orange, unless otherwise noted.

3. Use Pass & Seymour #IG5362 series, Hubbell IG-5362 series, Leviton #5362-IG series, for Specification grade IG receptacles.

F. Special purpose receptacles: Provide Specification grade devices with the NEMA configuration, voltage and current rating, number of poles and ground provisions as noted on the Drawings.

2.03 COVERPLATES

A. General:

1. Provide all coverplates with rounded edges and corners, smooth and free of grooves, embossing or other embellishment.

2. Provide mounting screws to match the plate finish.

3. Provide gang type coverplates where two or more devices are installed at one location. Individual gangable coverplates are not acceptable.

4. Provide plates of one design, standard conventional style, throughout the Project unless otherwise specified.

B. Weatherproof coverplates:

1. Provide horizontal mounted weatherproof in-use coverplate for one duplex or one GFCI receptacle. Provide gasketed, spring loaded, lockable, vertically self-closing covers suitable for use in damp and wet locations as described in UL 514 and NEC 406. Covers shall allow the use of the device with the cover closed.

2. Furnish base plates, covers, hinge pins, spring and screws of corrosion resistant type 302 stainless steel.

3. Provide two (2) keys for each locking type coverplate.

PART 3 - EXECUTION

3.01 EXAMINATION

A. Contractor shall thoroughly examine Project site conditions for acceptance of wiring device installation to verify conformance with Manufacturer and Specification tolerances. Do not commence with installation until all conditions are made satisfactory.

3.02 PREPARATION

A. Coordinate device heights in vending, kitchen and utility areas with benches and counters.

B. Coordinate switch mounting location with Architectural details. Unless otherwise noted, locate switches on latch side of door.

3.03 INSTALLATION

A. Install wiring devices in accordance with Manufacturer's written instructions, as indicated on the Drawings and as specified herein.

B. Install devices with the vertical centerline plumb and with all edges of the device flush against the adjacent wall surfaces.

C. Mount switches at 42 inches to center above finished floor unless otherwise noted.

D. Mount receptacles vertically with the centerline 18 inches above finished floor and with grounding slot at bottom.

E. Provide coverplates for all outlet boxes, switches, receptacles, etc.

F. Install blank coverplates on all outlet boxes in which no device is required or installed.

G. Provide coverplates that completely cover wall opening and seat against wall.

3.04 FIELD QUALITY CONTROL

A. Electrical testing:

1. Test proper polarity of all receptacles.
2. Test ground continuity of all wiring devices.
3. Test ground fault interrupting device operation.

B. Visual and mechanical inspection:

1. Visually inspect and replace damaged or defective devices.

3.05 CLEANING

A. Clean interior of all boxes from dirt and paint prior to installation of devices.

B. Clean wiring devices and coverplates from dirt and paint over spray.

END OF SECTION

SECTION 262816

OVERCURRENT PROTECTIVE DEVICES

PART 1 - GENERAL

1.01 SUMMARY

A. Work included: Labor, materials and equipment necessary to complete the installation required for the item specified under this Division, including but not limited to:
   1. Fuses.
   2. Molded case circuit breakers.

B. Related Work: Consult all other Sections, determine the extent and character of related Work and properly coordinate Work specified herein with that specified elsewhere to produce a complete installation.

1.02 REFERENCES

A. Comply with the latest edition of the following applicable Specifications and standards except as otherwise indicated or specified:
   1. Federal Specification (FS):
      FS W-C-375; Circuit Breakers, Molded Case, Branch Circuit and Service.
   2. Underwriters Laboratories, Inc. (UL):
      UL 489; Molded-Case Circuit Breakers, Molded-Case Switches and Circuit Breaker Enclosures.
   3. National Electrical Manufacturer Association (NEMA):
      NEMA AB 1; Molded Case Circuit Breakers.
   4. Pacific Gas & Electric (PG&E) – Section G2 – Protection and Control Requirements for Generation Entities - Power Generation Interconnection Handbook:
      Paragraph G2.14; Emergency Generator Requirements
      Table G2-5; Section G2 – Protection and Control Requirements for Generation Entities document.

1.03 SUBMITTALS

A. Submit in accordance with the requirements of Section 260010: Basic Electrical Requirements, the following items:
   1. Data/catalog cuts for each product and component specified herein, listing all physical and electrical characteristics and ratings indicating compliance with all listed standards.
   2. Describe product operation, equipment and dimensions and indicate features of each component.
   3. Clearly mark on each data sheet the specific item(s) being submitted and the proposed application.
   4. Provide factory certification of trip characteristics for each type and rating of circuit breaker.
   5. Provide current let-through and melting time information for each type and rating of fuses.
   6. Submit Manufacturer's installation instructions.
   7. Complete bill of material listing all components.
   8. Warranty.

1.04 OPERATION AND MAINTENANCE MANUAL

A. Supply operation and maintenance manuals in accordance with the requirements of Section 260010: Basic Electrical Requirements, to include the following:
   1. A detailed explanation of the operation of the system.
   2. Instructions for routine maintenance.
   3. Parts list and part numbers.
   4. Telephone numbers for authorized parts and service distributors.
   5. Final testing reports.

1.05 QUALITY ASSURANCE

A. All materials, equipment and parts comprising the units specified herein shall be new, unused and currently under production.

B. Only products and applications listed in this Section may be used on the Project unless otherwise submitted.

1.06 PRODUCT DELIVERY, STORAGE AND HANDLING

A. Delivery: Overcurrent Protective Device components shall not be delivered to the Project site until protected storage space is available. Storage outdoors covered by rainproof material is not acceptable. Equipment damaged during shipment shall be replaced and returned to Manufacturer at no cost to Owner.

B. Storage: Store in a clean, dry, ventilated space free from temperature extremes. Maintain factory wrapping or provide a heavy canvas/plastic cover to protect units from dirt, water, construction debris and traffic. Provide heat where required to prevent condensation.

C. Handling: Handle in accordance with Manufacturer's written instructions. Be careful to prevent internal component damage, breakage, denting and scoring. Damaged units shall not be installed. Replace damaged units and return equipment to Manufacturer.

1.07 WARRANTY

A. Units and components offered under this Section shall be covered by a 1 year parts and labor warranty for malfunctions resulting from defects in materials and workmanship. Warranty shall begin upon acceptance by the Owner.

1.08 EXTRA MATERIAL

A. Three (3) spare fuses of each size and type or a minimum of 10 percent of the number installed, whichever is greater, shall be supplied to the Owner in the specified spare fuse cabinet(s).

B. Provide and locate a spare fuse cabinet(s) in the main electrical room. Cabinet shall have lockable piano hinged door, keyed to match panelboards, with fuse schedules mounted in a frame on interior. Size and quantity of cabinets shall be as required to accommodate spare fuses required.

PART 2 - PRODUCTS

2.01 MANUFACTURERS

A. Products furnished by the following Manufacturers shall be acceptable if in compliance with all features specified herein and indicated on the Drawings.

1. Fuses:
   a. Bussmann Division, Cooper Industries.
   b. Gould Shawmut Co.
2. Circuit breakers:
   a. Eaton Electrical/Cutler-Hammer.
   b. General Electric.
   c. Siemens/I-T-E.
   d. Square D.

B. Substitutions: Under provisions of Section 260010: Basic Electrical Requirements.

2.02 GENERAL

A. All breakers shall comply with breaker requirements set forth in the "switchboards" and "panelboards" sections of the specification.

2.03 FUSES

A. General: All power fuses shall be time-delay, high interrupting (300 K AIC), current limiting type, unless otherwise noted on the Drawings. All fuses shall be the product of a single Manufacturer and shall be selectively coordinated when applied in 2:1 ratios. Types of fuses shall be as follows:

1. Motor branch circuit fuses (0-600 amperes): UL Class J dual element, time delay type fuse. Motor branch circuit fuses shall be sized for Type 2 coordination for the motor controller and back-up motor overload protection and shall be coordinated with motor starter overload relay heaters. See Section 262900: Motor Controls.

B. Control and instrument fuses shall be suitable for installing in blocks or fuseholders. Exact type and rating shall be as recommended by the Manufacturer of the equipment being protected.

2.04 MOLDED CASE CIRCUIT BREAKERS

A. Branch and feeder circuit breakers shall be molded case and trip indicating.

B. All circuit breakers rated over 70A shall be provided with permanently installed provisions for locking the breaker in the off position.
C. Where stationary molded case circuit breakers are indicated on the Drawings to be current limiting type, they shall be current limiting as defined by UL 489 and shall not employ any fusible elements.
D. Circuit breakers shall have interrupting capacity not less than that indicated on the Drawings or if not indicated, not less than 14,000RMS symmetrical amps for 480 volt systems and 10,000RMS symmetrical amps for 208 volt systems.
E. Covers shall be sealed on non-interchangeable breakers and trip unit covers shall be sealed on interchangeable trip breakers to prevent tampering. Circuit breaker ratings shall be clearly visible after installation or engraved nameplates shall be provided stating the rating. All ferrous parts shall be plated to minimize corrosion.
F. Circuit breakers shall be toggle, quick-make and quick-break operating mechanisms with trip-free feature to prevent contacts being held closed against overcurrent conditions in the circuit. Trip position of the breakers shall be positively identified. This positive identification can be in the form of a contrasting flag, indicating led or other lamp, or other methods to easily indicate the tripped circuit. Operator handles that move from the fully on position as the sole indication of a circuit trip are not acceptable.
G. Multipole breakers shall have a single handle to open and close all contacts simultaneously in both manual operation and under automatic tripping. Interpole barriers shall be provided inside the breaker to prevent any phase-to-phase flashover. Each pole of the breaker shall have means for Arc extinguishing.
H. All terminals shall be rated for aluminum or copper wire.
I. Circuit breakers with trip ratings 100 amp and smaller shall be ambient temperature compensated, thermal magnetic type unless otherwise noted. Breakers shall be of full size, 1" per pole type. Panels with more than one branch breaker larger than 100 amps shall be installed in distribution type panels.
J. Circuit breakers with trip ratings 101 amps through 399 amps shall have solid state electronic trips with true RMS reading through the 13th harmonic with 1% accuracy, interchangeable trip via front accessible current plug, adjustable instantaneous and short time be rated as indicated on Drawings at the voltage indicated.
K. Circuit breakers with trip ratings 400 amps through 1200 amps shall have electronic trips with the following characteristics:
    1. Electronic true RMS sensing trip, adjustable via current plug.
    2. Adjustable long time setting and delay.
    3. Adjustable short time pick-up and delay.
    4. Adjustable instantaneous pick-up.
    5. Mechanical targets on overload, ground fault and short circuit.
L. Accessories: Provide accessories as noted on the Drawings, i.e. shunt-trip, auxiliary contacts, undervoltage trip, alarm switch, etc.
M. Spaces in the boards shall be able to accept any combination of 1, 2 or 3 pole circuit breakers as indicated. Provide all necessary bus, device supports and mounting hardware sized for frame, not trip rating.
N. Series rated breakers are not acceptable unless specifically noted on the Drawings.
O. Enclosed breakers shall be installed in a NEMA 3R enclosure.

PART 3 - EXECUTION

3.01 EXAMINATION

A. Contractor shall thoroughly examine Project site conditions for acceptance of overcurrent protective device installation to verify conformance with Manufacturer and Specification tolerances. Do not commence with installation until all conditions are made satisfactory.

3.02 INSTALLATION

A. Install overcurrent protective devices in accordance with Manufacturer's written instructions, as indicated on the Drawings and as specified herein.
B. Tighten electrical connectors and terminals; including screws and bolts, in accordance with equipment Manufacturers published torque-tightening values for equipment connectors.

Where Manufacturers torque requirements are not indicated tighten connectors and terminals to comply with tightening torque specified in UL Standard 486A.

C. Install overcurrent protective devices and accessories in accordance with Manufacturer's written instructions and with recognized industry practices to ensure that protective devices comply with requirements. All devices shall be installed in accordance with applicable NEC and NEMA standards for installation.

D. Enclosed circuit breakers shall be mounted to the concrete pad or on a strut rack. If a strut rack is used, submit the structural details of the rack with calculations prior to installation.

3.03 FIELD QUALITY CONTROL

A. Independent testing: Contractor shall arrange and pay for the services of an independent Testing Agency to perform all quality control electrical testing, calibration and inspection required herein. Testing Agencies objectives shall be to:
   1. Assure overcurrent protective device installation conforms to specified requirements and operates within specified tolerances.
   2. Field test and inspect to ensure operation in accordance with Manufacturer's recommendations and Specifications.
   3. Prepare final test report including results, observations, failures, adjustments and remedies.
   4. Verify ratings and settings and make final adjustments.

B. At least three weeks prior to any testing, notify the Engineer so that arrangement can be made for witnessing test, if deemed necessary. All pretesting shall have been tested satisfactorily prior to the Engineer's witnessed test.

C. The Contractor shall supply a suitable and stable source of electrical power to each test site. The Testing Agency shall specify the specific power requirements.

D. Testing of overcurrent protective devices shall be done only after all devices are installed and system is energized.

E. Perform testing per NETA ATS Standards.

F. Prefunctional testing:
   1. Provide Testing Agency with Contract Documents and Manufacturer instructions for installation and testing.
   2. Visual and mechanical inspection:
      a. Inspect for physical damage, defects alignment and fit.
      b. Perform mechanical operational tests in accordance with Manufacturer's instructions.
      c. Compare nameplate information and connections to Contract Documents.
      d. Check tightness of all control and power connections.
      e. Check that all covers, barriers and doors are secure.
   3. Electrical tests:
      a. Circuit continuity: All feeders shall be tested for continuity. All neutrals shall be tested for improper grounds.
      b. Determine that circuit breaker will trip under overcurrent condition, with tripping time in conformance with NEMA AB 1 requirements.
      c. Test all circuit breakers with frame size 225 amps and larger and 10 percent of all circuit breakers with frame sizes less than 225 amps in each panelboard, distribution board, switchboard, etc. unless otherwise noted.

G. Contractor shall replace at no costs to the Owner all devices which are found defective or do not operate within factory specified tolerances.

H. Contractor shall submit the Testing Agency's final report for review prior to Project closeout and final acceptance by the Owner. Test report shall indicate test dates, devices tested, results, observation, deficiencies and remedies. Test report shall be included in the operation and maintenance manuals.

3.04 ADJUSTING

A. Adjust circuit breaker trip settings based on recommendations of Section 260060: Power System Study.

B. Adjust circuit breaker trip settings for coordination with other overcurrent protective devices in system.

C. Adjust circuit breaker trip settings for adequate protection from overcurrent and fault currents.

3.05 CLEANING

A. Upon completion of Project prior to final acceptance the Contractor shall thoroughly clean overcurrent protective devices per Manufacturer's approved methods and materials. Remove paint splatters and other spots, dirt and debris.

3.06 TRAINING

A. Factory authorized service representative shall conduct a 4 hour training seminar for Owner's Representatives upon completion and acceptance of system. Instructions shall include safe operation, maintenance and testing of equipment with both classroom training and hands-on instruction.

B. Contractor shall schedule training with a minimum of 7 days advance notice.

END OF SECTION

SECTION 26 56 00

EXTERIOR LIGHTING

PART 1 - GENERAL

1.01 SUMMARY

A. Work included: Labor, materials and equipment necessary to complete the installation required for the item specified under this Division, including but not limited to:
   1. Site lighting fixtures.
   2. Diodes.
   3. LED Drivers.
   4. Pole standards.

B. Related Work: Consult all other Sections, determine the extent and character of related Work and properly coordinate Work specified herein with that specified elsewhere to produce a complete installation.
   1. Division 03: Cast-in-place concrete. Light pole foundations and backboxes.
   2. Division 05: Miscellaneous. Fittings, brackets, backing supports, rods, etc. as required for support and bracing of lighting fixtures.
   3. Division 09: Painting. Field painting of lighting fixtures.

1.02 REFERENCES

A. Comply with the latest edition of the following applicable Specifications and standards except as otherwise indicated or specified:
   1. Underwriters Laboratories, Inc. (UL):
      UL 66; Fixture Wire.
      UL 1598; Luminaires.
      UL 2108; Low Voltage Lighting Systems.
   2. Illumination Engineering Society of North America (IESNA):
      IESNA LM-79-2008; Approved Method for Electrical and Photometric Measurements of Solid-State Lighting Products.
      IESNA LM-80-2008; Approved Method for Measuring Lumen Maintenance of LED Light Sources.
   3. Restriction of Hazardous Substances in LED (RoHS):
      EU RoHS; Directive 2002/95/EC Restriction of Hazardous Materials.

1.03 SUBMITTALS

A. Items specified under this Section and noted in fixture schedule are Priority 1. Refer to Section 260010: Basic Electrical Requirements for specific Priority 1 requirements.

B. Submit in accordance with the requirements of Section 260010: Basic Electrical Requirements, the following items:
   1. Data/catalog cuts for each product and component specified herein, listing all physical and electrical characteristics and ratings indicating compliance with all listed standards.
   2. Clearly mark on each data sheet the specific item(s) being submitted and the proposed application.
   3. Independent Testing Laboratories, Inc. or equal, photometric test report for each luminaire type and lamp combination listed on the fixture schedule. Test reports shall be based on Illuminating Engineering Society published test procedures and shall contain candlepower distribution curves in five lateral planes for fixtures with asymmetric distributions and fixture luminance data for vertical angles above 45 degrees from nadir.
   4. Shop Drawings:
      a. Where noted in the Fixture Schedule, submit Shop Drawings of special mounting details, including fixture support, attachment methods, etc. Shop Drawings shall include plan and section views indicating all structural members being used for support.
      b. Where noted in the Fixture Schedule, submit Shop Drawings from Manufacturer detailing custom lighting fixtures indicating dimensions, weights, methods of field assembly, components, features, accessories, methods of support, etc.

5. Samples of fixture finish where "FINISH AS SELECTED BY THE ARCHITECT" is indicated on the Fixture Schedule. The Engineer or Architect must approve samples in writing prior to ordering. With each submitted sample provide the paint formula used to achieve the color finish.
6. Where noted in the Fixture Schedule, provide samples for verification purposes of specific individual fixtures.
7. Submit Manufacturer's installation instructions.
8. Complete bill of material listing all lighting fixtures and components.
9. Warranty.

1.04 OPERATION AND MAINTENANCE MANUAL

A. Supply operation and maintenance manuals in accordance with the requirements of Section 260010: Basic Electrical Requirements, to include the following:
   1. A detailed explanation of the operation of the system.
   2. Instructions for routine maintenance.
   3. Pictorial parts list and part numbers.
   4. Telephone numbers for the authorized parts and service distributors.

1.05 QUALITY ASSURANCE

A. All materials, equipment and parts comprising the units specified herein shall be new, unused and currently under production.
B. Only products and applications listed in this Section may be used on the Project unless otherwise submitted.

1.06 PRODUCT DELIVERY, STORAGE AND HANDLING

A. Delivery: Lighting fixtures shall not be delivered to the Project site until protected storage space is available. Storage outdoors covered by rainproof material is not acceptable. Equipment damaged during shipment shall be replaced and returned to Manufacturer at no cost to Owner.
B. Storage: Store in a clean, dry, ventilated space free from temperature extremes. Maintain factory wrapping or provide a heavy canvas/plastic cover to protect units from dirt, water, construction debris and traffic. Provide heat where required to prevent condensation.
C. Handling: Handle in accordance with Manufacturer's written instructions. Be careful to prevent internal component damage, breakage, denting and scoring. Damaged units shall not be installed. Replace damaged units and return equipment to Manufacturer.

1.07 WARRANTY

A. Units and components offered under this Section shall be covered by a 5 year parts and labor warranty for malfunctions resulting from defects in materials and workmanship. Warranty shall begin upon acceptance by the Owner.

PART 2 - PRODUCTS

2.01 MANUFACTURERS

A. Products furnished by the following Manufacturers shall be acceptable if in compliance with all features specified herein and indicated on the Drawings.
   1. Lighting fixtures: Refer to Fixture Schedule.
   2. LEDs & LED drivers: As provided by the light fixture manufacturer, and meeting the requirements herein.
B. Substitutions: Under provisions of Section 260010: Basic Electrical Requirements.

2.02 FIXTURES

A. Refer to the fixture schedule on the plans.
B. Standard lumen output shall meet or exceed the State of California Title 24 Energy Code for high efficiency luminaries.
C. Luminaires shall not draw power in the off state. Luminaires with integral occupancy, motion, photo-controls, or individually addressable luminaires with external control and intelligence are exempt from this requirement. The power draw for such luminaires shall not exceed 0.5 watts when in the off state.
D. Luminaire manufacturers shall adhere to device manufacturer guidelines, certification programs, and test procedures for thermal management
E. Luminaires shall be fully accessible from below ceiling plane for changing drivers, power supplies and arrays

F. The finish of all fixtures and trim shall be submitted to and approved by the Architect prior to ordering.
G. All standard fixtures must bear UL label. Attaching of labels after delivery of fixtures is not acceptable.
H. All labels affixed to the fixture shall be in a location not visible from normal viewing angles.
I. Ferrous mounting hardware and accessories shall be finished using either a galvanic or phosphate primer/baked enamel process to prevent corrosion and discoloration of adjacent materials.
J. Fasteners shall be manufactured of galvanized steel.
K. Fixtures shall be free of light leaks and shall be designed to provide sufficient ventilation of lamps and ballasts, including vent holes where required.
L. All sheet metal Work shall be free from tool marks and dents and shall have accurate angles bent as sharp as compatible with the gauges of the required metal. All intersections and joints shall be formed true and of adequate strength and structural rigidity to prevent any distortion after assembly. All surfaces shall be finished so as to eliminate all exposed sharp edges. All mitered corners or joints shall be accurately aligned with abutting intersecting members. Sheet metal Work shall be properly fabricated so that planes will not deform (i.e. become concave or convex) due to normal expected ambient and operating conditions.
M. Wiring channels and LED mountings shall be rigid and accurately constructed.

2.03 LIGHT EMITTING DIODES (LED):

A. Refer to the Fixture Schedule for size and type of LED lamps required.
B. All diodes shall come from the same manufacturer and carry the same bin number.
C. All diodes shall be tested and tuned for the optimal Kelvin color point.
D. Color correlated temperature: No greater than 3000K
E. Minimum CRI (Color Rendering Index): 70
F. Diodes shall have a minimum life of 50,000 hours and maintain at least 70% of initial lamp lumens throughout this period.
G. LED fixture components shall be free of all toxic materials to include lead, cadmium and mercury, and shall be RoHS compliant.
H. Groups of three or more diodes in a single housing shall be tested for even distribution.
I. All LED fixtures shall have an IES formatted electronic photometric report.
J. Comply with IES LM-79-08 Approved Method for measuring lumen maintenance of LED light sources.
K. Comply with IES LM-80-08 Approved Method for electrical and photometric measurement of SSL product.
L. LED arrays shall be sealed, high performance, long life type; minimum 70% rated output at 50,000 hours.
M. LEDs shall be “Bin No. 1” quality.
N. The LED light source shall be fully dimmable with use of compatible dimmers switch designated for low voltage loads.

2.04 LED DRIVERS:

A. LED drivers shall be integral to fixture housing or remotely located, when specified, within 15 feet of diode assembly.
B. Drivers shall have a minimum life of 50,000 hours and maintain at least 70% of initial lamp lumens for that period.
C. Typical LED drivers shall be electronic, 0-10V dimming.
D. Drivers shall be solid state and accept 120 through 277 VAC at 60 Hz input.
E. Power Factor: 0.90 or higher.
F. Maximum driver case temperature not to exceed driver manufacturer recommended insitu operation.
G. Output operating frequency: 60Hz.
H. Interference: EMI and RFI compliant with FCC 47 CFR Part 15.
I. Total Harmonic Distortion Rating: 20% Maximum.
J. Meet electrical and thermal conditions as described in LM-80 Section 5.0. 7.

2.05 FIXTURE TRANSFORMERS

A. Low voltage transformers:

1. Low voltage transformers shall be encapsulated, core and coil construction, for use in outdoor location, unless otherwise noted.
2. Primary voltage shall be as noted in Fixture Schedule, secondary voltage 12 VAC, unless otherwise noted.
3. Where transformers are integral to the fixture, they shall be accessible.
4. Sound rating shall be the lowest available. Replace excessively noisy transformers at no cost to the Owner.

2.06 POLES

A. Wind-load strength: 80 mph and 1.3 gust factor for total support assembly, including pole, base and anchorage, where used, to carry the fixtures, supports and appurtenances at the indicated heights above grade without deflection or whipping.
B. Arm, bracket and tenon mount materials: Match the poles.
C. Mountings, fastenings and appurtenances: Corrosion-resistant components compatible with the poles and fixtures that will not cause galvanic action at contact points. Provide mountings that will correctly position the luminaire to provide the indicated light distribution.
D. Pole shafts: Round straight. Round tapered. Square straight. Square tapered.
E. Handhole: Provide handhole and cover near base of pole shaft for access to wiring compartment.
F. Grounding lug: Provide grounding lug for grounding conductor with access through handhole.
G. Pole bases: Anchor type with galvanized steel hold-down or anchor bolts, leveling nuts and bolt covers.
   Aluminum poles: Cast 356-T6 alloy. Conform to ASTM B 429, "Standard Specification of Aluminum-Alloy Extruded Structural Pipe and Tube." Tapered from 5" diameter at the bottom to 7" at top. Pole wall thickness to be minimum 0.156" thick. Provide access handhole in pole wall.
H. Pole-top tenons: Fabricated to support the fixture indicated and securely fastened to the pole top.

PART 3 - EXECUTION

3.01 EXAMINATION

A. Contractor shall thoroughly examine Project site conditions for acceptance of site lighting fixture installation to verify conformance with Manufacturer and Specification tolerances. Do not commence with installation until all conditions are made satisfactory.

3.02 PREPARATION

A. Consult Architectural or Landscape Drawings for details of ceiling and wall construction, finish, landscape features and other applicable details and provide backboxes and trims suitable for the particular type of ceiling or wall at each location.

3.03 INSTALLATION

A. Install lighting fixtures in accordance with Manufacturer's written instructions, as indicated on the Drawings and as specified herein.
B. Contractor shall be responsible for all supports, hangers and hardware necessary for a complete installation.
C. Fixtures shall be plumb, level, square, in straight lines and without distortion. Remedy light leaks that may develop after installation of recessed or enclosed fixtures.
D. Turn over Project with all lamps in new and operating condition. Lamps that are burned less than 100 hours at Project closeout are considered new.

3.04 FIXTURE SUPPORTS

A. Support outlet boxes as specified in Section 260533: Boxes. Provide all boxes with grounding pigtail.

3.05 IDENTIFICATION SYSTEM

A. All junction box coverplates for the lighting branch circuit system shall be clearly marked with permanent black ink felt pen identifying the branch circuit (both panel designation and circuit number) contained in the box.

3.06 INSTALLATION OF POLES

A. General: Store poles on decay-resistant treated skids at least 1 ft. above grade and vegetation. Support pole to prevent distortion and arrange to provide free air circulation.

B. Metal poles: Retain factory-applied pole wrappings until just before pole installation. For poles with nonmetallic finishes, handle with web fabric straps.
C. Pole installation: Use fabric web slings (not chain or cable) to raise and set poles.

3.07 CONCRETE FOUNDATIONS

A. Construct concrete foundations with 3000 pound, 28 day concrete conforming to Division 03, Section "Cast-In-Place Concrete." Comply with details and Manufacturer's recommendations for reinforcing, anchor bolts, nuts and washers.

3.08 FIELD QUALITY CONTROL

A. Visual and mechanical inspection:
   1. Inspect for physical damage, defects, alignment and fit.
   2. Perform operational test of each lighting fixture after installed, circuited and energized.
   3. Perform emergency operational test of all lighting fixtures connected to emergency circuiting by interrupting normal power source.
B. Contractor shall replace at no cost to the Owner all equipment which is found defective or do not operate within factory specified tolerances.
C. Field mock-up: Where noted in the Fixture Schedule, the Contractor shall provide sample(s) for use in full-size field mockup of specific individual fixtures. The Contractor shall allow time in the bid and be responsible prior to installation of the light fixtures, for installing a sample fixture on the Project for review. This mock-up will be required to be coordinated and reviewed with the Owner's Representative and the Architect or Engineer. The Contractor shall be responsible for providing the labor and materials for the field mock-up including, but not limited to, special rigging or scaffolding and adjusting fixtures in field, as directed by the Architect or Engineer.

3.09 ADJUSTING

A. Field aiming: Where noted in the Fixture Schedule, the Contractor shall allow time in the bid and be responsible upon the installation of the light fixtures, for aiming and lamping fixtures as described in the fixture schedule. This aiming will be performed at night under the direction of the Owner's Representative and the Architect or Engineer. The Contractor shall be responsible for providing the labor and materials for field aiming. This will include, but not limited to, special rigging or scaffolding, adjusting fixtures in field, testing of various lamps with each fixture and/or testing of various lenses or louvers with fixtures, as directed by the Architect or Engineer.

3.10 CLEANING

A. Clean lighting fixtures prior to Project closeout in accordance with Manufacturer's recommended materials and methods.

END OF SECTION

SECTION 31 10 00

SITE CLEARING

PART 1 - GENERAL

1.01 SECTION INCLUDES

A. Specifications for clearing, grubbing and disposing of vegetation, including bushes, brush, trees, stumps, fallen timber, logs, roots, rubbish, refuse trash, and debris within the indicated site limits.

B. Protection from injury or defacement of trees and other vegetation and objects indicated to be preserved.

C. Removal, salvage, or other disposition of slabs, footings and foundations; existing pavement, curbs and gutters, sidewalks, headwalls, walls, and steps; utility service facilities; guardrail and posts, highway and street signs and fences; and other miscellaneous structures and site improvements which interfere with construction.

1.02 REFERENCES

A. California Code of Regulations, Title 8, Chapter 4, Subchapter 4 - Construction Safety Orders

B. California Code of Regulations, Title 24, Part 2, California Building Code, Chapter 33, Site Work, Demolition and Construction

C. State of California, Department of Transportation (Caltrans), Standard Specifications

1.03 JOBSITE CONDITIONS

A. Stockpile salvaged material in a secured location.

B. Clear and restore areas used for the Contractor's convenience. Restore such areas to their original condition, and provide mulching, seeding and planting as required.

C. Protect survey markers and monuments, existing improvements, and adjacent properties from removal and damage.

D. Give written notices to utility companies and municipal departments requesting discontinuance of services to areas which will be affected by the site preparation work.

1.04 CARE OF EXISTING TREES

A. Trees and plants indicated on the Contract Drawings to remain and to be preserved shall be protected from damage by constructing suitable barriers or fences at, or near, the driplines of the trees and plants. Vehicles, equipment, materials, and debris shall not be placed or parked in these areas or under trees to remain.

B. Feed, water, and maintain protected trees and plants in a healthy, growing condition during the construction period.

PART 2 - PRODUCTS

2.01 MATERIALS AND EQUIPMENT

A. Furnish all materials, tools, equipment, facilities, and services as required for performing site clearing and preparation work.

PART 3 - EXECUTION

3.01 CLEARING AND GRUBBING

A. Perform clearing and grubbing as necessary to remove vegetation and objectionable material from the site. Clear the site within the limits indicated, and remove cleared materials and debris from the site.

B. Remove stumps and roots completely in excavation areas and under embankments where the original ground level is within 3.5 feet of subgrade or slope of embankments. In embankment areas, where the original ground level is more that 3.5 feet below the subgrade or slope of embankment, cut off trees, stumps, and brush to within six inches of the ground.

C. Do not start earthwork operations in areas where clearing and grubbing are not complete, except that stumps and large roots may be removed concurrently with excavation.

D. Where the work includes requirements for wood chip mulch, acceptable material from clearing and grubbing activities may be used to produce such mulch.

3.02 TREE BRANCHES

A. Remove tree branches overhanging trackways, roadways, and other designated areas of the site to within 20 feet of finish grade. Cut off branches neatly and close to the tree boles. Remove other branches as necessary to present a balanced appearance. Treat scars resulting from tree branch removal with a heavy coat of an approved asphaltic tree paint.

3.03 REMOVAL

A. Remove existing pavements, structures, and site improvements which interfere with construction, where demolition is not indicated.

B. Remove walls and masonry construction to a minimum depth of two feet below existing ground level in areas where such items do not interfere with construction.

C. Slabs may be broken for drainage and left in place where they are not detrimental to the structural integrity of the fill or structure to be placed above.

3.04 DISPOSAL OF REMOVED MATERIALS AND DEBRIS

A. Dispose of removed materials, waste, trash, and debris in a safe, acceptable manner, in accordance with applicable laws and ordinances and as prescribed by authorities having jurisdiction.

B. Burying of trash and debris on the site will not be permitted. Burning of trash and debris at the site will not be permitted.

C. Remove trash and debris from the site at frequent intervals so that its presence will not delay the progress of the work.

D. Removed materials, waste, trash, and debris shall become the property of the Contractor and shall be removed from the District's property and disposed of in a legal manner. Location of disposal site and length of haul shall be the Contractor's responsibility.

3.05 SALVAGE

A. Items or materials to be salvaged are indicated on the Contract Drawings and in the Contract Specifications.

B. Protect metallic coatings on salvaged items. Remove adhering concrete from salvaged items.

C. Repair, or replace with new material, salvaged material damaged or destroyed due to Contractor's negligence.

END OF SECTION

SECTION 31 20 00

EARTHWORK

PART 1 - GENERAL

1.01 SECTION INCLUDES

A. Specifications for the excavation, filling, recompacting, grading and disposal of excess material.

1.02 RELATED SECTIONS

A. Section 31 23 19 – Dewatering

B. Section 31 23 33 – Trenching and Backfilling

C. Section 32 11 23 - Aggregate Base

1.03 REFERENCES

A. ASTM C136-84a – Standard Method for Sieve Analysis of Fine and Coarse Aggregate

B. ASTM D1557 – Laboratory Compaction Characteristics of Soil Using Modified Effort

C. ASTM D2922 – Density of Soil and Soil-Aggregate in Place by Nuclear Methods

D. Caltrans – State of California Standard Specifications; latest edition

E. Geotechnical Report – Geotechnical Report prepared by Terracon Consultants is available for review at the District.

1.04 DEFINITIONS

A. Compaction

1. The degree of compaction is specified as percent compaction. Maximum densities refer to the maximum laboratory dry soil densities obtainable at optimum moisture content as determined by ASTM D1557.

2. Percent compaction (relative compaction) is the ratio of the measured field dry density to the laboratory maximum dry density.

B. Excavation Slope: Excavation slope shall be defined as an inclined surface formed by removing material from below existing grade.

1.05 SUBMITTALS

A. Product Data

1. Fill materials

2. Source of concrete and aggregate for approval

B. Test Reports

1. Gradation (ASTM C136)

2. Density-In-Place (ASTM D2922)

PART 2 - PRODUCTS

2.01 FILL MATERIALS

A. Class 2 Aggregate Base

1. Class 2 aggregate base for subsequent backfill and/or pavement base to be ¾ inches maximum Class 2 aggregate base conforming to Caltrans, Section 26

B. Engineered Fill Material: Soil excavated from site.

1. Imported materials should have a plasticity index not less than 5 nor greater than 15, as determined by ASTM D4318; and expansion index not exceeding 20, as determined by UBC Specification 29-2; and a particle size not exceeding 3 inches as determined by ASTM D422.

C Imported Fill Requirements: Imported fill, where required, shall be non expansive granular soil, free of organic matter and deleterious substances. Imported fill material shall conform to the following requirements:

1. Grading:

U. S. Sieve Size	Percentage Passing Sieve
2 ½ inch	100
No. 8	25-45
No. 200	0-10

2. Be thoroughly compactable without excessive voids.
3. Meet the following plasticity requirements:
   a. Maximum Plasticity Index of 12, as determined by ASTM D4318.
   b. Maximum Liquid Limit of 35, as determined by ASTM D4318

PART 3 - EXECUTION

3.01 CONSTRUCTION

A. Surplus Material

1. Unless otherwise specified, surplus excavated material shall be disposed of off site in accordance with applicable ordinances and environment requirements at the expense of the Contractor.

B. Hauling

1. When hauling is down over highways or city streets, loads shall be trimmed and the vehicle shelf areas shall be cleaned after each loading.

2. Loads shall be watered after trimming to eliminate dust.

C. Subgrade

1. Unless directed otherwise on the drawings, existing subgrade shall be compacted to 90% RC, 12” in depth, prior to placement of base material.

2. Subgrade shall be inspected for compliance to the soils report by the District/Geotechnical engineer prior to filling or on achieving final cut depth

D. Finish Grading

1. Finish surfaces shall be smooth, compacted and free from irregularities. The degree of finish shall be that normally obtainable with a blade-grader.

2. Finish grades shall be as specified on the plans, except where a local change in elevation is required to match existing conditions, or to ensure proper drainage.

3. When the work is at an intermediate stage of completion, lines and grades shall be as specified within □0.5 foot or as necessary to provide adequate drainage.

3.02 FIELD QUALITY CONTROL

A. Fill material shall be placed in horizontal layers and compacted with power operated tampers, rollers, idlers, or vibratory equipment. Material type, maximum layer depth, relative compaction, and general application are specified in Table A, below. Unless otherwise specified, fill classes shall be used where specified in Table A under General Application.

Table A: Fill Classification

Material Type	Maximum Uncompressed Layer Depth (Inches)	Minimum Relative Compaction (Percent)	General Application
Aggregate Base	8"	95%	Roadway Grades

3.03 TESTS

A. Inspection Trenches

1. District will direct Contractor to construct inspection trenches in compacted or consolidated backfill to determine that Contractor has complied with these Specifications.

END OF SECTION

SECTION 31 23 33

TRENCHING AND BACKFILLING

PART 1 - GENERAL

1.01 SECTION INCLUDES

A. Specifications for excavating, backfilling and compacting for the installation of pipe and pipeline appurtenances (i.e. manholes, catch basins, area drains, etc.)

1.02 RELATED SECTIONS

A. Section 31 20 00 - Earthmoving

B. Section 31 23 19 - De-watering

C. Section 32 11 23 - Aggregate Base

1.03 REFERENCES

A. North Marin Water District Standard Specifications - Latest Edition

B. Novato Sanitary District Standard Specifications - Latest Edition

C. PG&E Standard Specifications - Latest Edition

D. AT&T Standard Specifications - Latest Edition

E. Marin County Uniform Construction Standards, May 2008

F. California Plumbing Code - Latest Edition

G. Caltrans Standard Specifications and Drawings - Latest Edition

PART 2 - PRODUCTS

2.01 BACKFILL MATERIAL

A. Trench backfill shall consist of Class 2 Aggregate Base, unless otherwise noted.

2.02 PIPING MATERIAL

A. All piping material shall conform to respective utility agency and the California Plumbing Code.

2.03 BURIED WARNING AND IDENTIFICATION TAPE

A. Polyethylene plastic and metallic core or metallic-faced, acid- and alkali-resistant, polyethylene plastic warning tape manufactured specifically for warning and identification of buried utility lines. Provide tape on rolls, 3-inch minimum width, color coded as specified below for the intended utility with warning and identification imprinted in bold black letters continuously over the entire tape length. Warning and identification to read, 'CAUTION, BURIED (intended service) LINE BELOW" or similar wording. Color and printing shall be permanent, unaffected by moisture or soil.

1. Warning Tape Color Codes.
   Red: Electric.
   Yellow: Gas, Oil; Dangerous Materials.
   Orange: Telephone and Other Communications.
   Blue: Water Systems.
   Green: Sewer Systems.
   White: Steam Systems.
   Grey: Compressed Air.

2. Warning Tape for Metallic Piping: Acid and alkali-resistant polyethylene plastic tape conforming to the width, color, and printing requirements specified above. Minimum thickness of tape shall be 0.003 inch. Tape shall have a minimum strength of 1500 psi lengthwise, and 1250 psi crosswise, with a maximum 350 percent elongation.

3. Detectable Warning Tape for Non-Metallic Piping: Polyethylene plastic tape conforming to the width, color, and printing requirements specified above. Minimum thickness of the tape shall be 0.004 inch. Tape shall have a minimum strength of 1500 psi lengthwise and 1250 psi crosswise. Tape shall be manufactured with integral wires, foil backing, or other means of enabling detection by a metal detector when tape is buried up to 3-feet deep. Encase metallic element of the tape in a protective jacket or provide with other means of corrosion protection.

2.04 DETECTION WIRE FOR NON-METALLIC PIPING

A. Detection wire shall be insulated single strand, solid copper wire with a minimum of 12 AWG.

PART 3 - EXECUTION

3.01 EXCAVATION

A. General

1. Keep trench dry throughout construction operations

2. Trench excavation shall follow the alignment of the pipe or utility centerline

3. No more than 100 LF of trench shall be open at one time

B. Shoring and Bracing

1. Contractor is responsible for any damage or injury resulting from his construction operations. Contractor shall perform, at his own expense, all necessary repair work or reconstruction.

2. Contractor will be responsible for all shoring with bracing design and installation.

C. Excavation Required Beyond Trench Limits

1. Excavation (bell holes) where necessary in the sides and bottom of the trench at pipe joint locations shall be large enough to make joints and permit inspection.

2. Excavation to a greater depth than shown on the plans may be ordered by the Project Geotechnical Consultant if the native material at the bottom of the trench will not provide proper support for the pipe or if the excavation is in rock.

3. Remove all adjacent, saturated material where pipeline leaks occur.

3.02 UTILITIES

A. Location

1. Approximate known locations of underground utilities and structures are indicated on the plans. Contractor shall determine exact location of underground utilities and structures prior to construction.

2. Adjustments of pipe alignment and elevation will be authorized by the District where exploratory work indicates the need.

B. Excavation Around Utilities

1. Excavation and other work under or adjacent to utilities shall not interfere with their safe operations and use.

2. Probe carefully to determine the exact location of utility and hand excavate where necessary to avoid damage.

3. In the event of damage incurred during construction near such structures or property, Contractor shall immediately notify the District and other appropriate utility or public safety authorities and shall arrange for immediate repairs at Contractor’s expense.

C. Tunneling Under Utilities

1. Tunneling may be allowed for short distances with the approval from the Project Geotechnical Consultant.

3.03 BLASTING

A. Blasting will not be permitted.

3.04 BACKFILL OF TRENCHES

A. Prior to backfilling, the trench shall be cleared of all wood and debris.

B. Backfill pipeline trenches to the level of the original ground surface or the underside of the pavement base course.

C. Backfill material shall not be dropped directly on the pipe.

D. Carefully remove timbering, sheeting, shoring and sheet piling, according to the instructions of the shoring system designer or the manufacturer, using methods that will minimize caving. If caving is occurring, the shoring system will be required to remain in place up to one to six inches above the top of the pipe.

E. Jetting of trench backfill is not permitted.

F. If trench has been excavated below the specified depth, that portion of the trench shall be backfilled with Class 2 or select material and compacted before pipe installation, at the Contractor's expense.

G. If pipe or conduit has less than 18 inches of final cover, trench shall be backfilled with Control Density Fill (CDF) to a depth specified by the Engineer.

END OF SECTION

SECTION 32 11 23

AGGREGATE BASE

PART 1 - GENERAL

1.01 SECTION INCLUDES

A. Specifications for furnishing, spreading, and compacting aggregate base course for pavements as indicated.

1.02 REFERENCES

A. American Society for Testing and Materials (ASTM):

ASTM D2922 Test Methods for Density of Soil and Soil-Aggregate in Place by Nuclear Methods (Shallow Depth)

ASTM D3017 Test Method for Water Content of Soil and Rock in Place by Nuclear Methods (Shallow Depth)

B. State of California, Department of Transportation (Caltrans), Standard Specifications:

Section 17 Watering

Section 26 Aggregate Bases

C. State of California, Department of Transportation (Caltrans), Standard Test Methods:

Calif. Test 201 Method of Soil and Aggregate Sample Preparation Aggregates

Calif. Test 202 Method of Tests for Sieve Analysis of Fine and Coarse Aggregates

Calif. Test 205 Method of Determining Percentage of Crushed Particles

Calif. Test 216 Method of Test for Relative Compaction of Untreated and Treated Soils and Aggregates

Calif. Test 217 Method of Test for Sand Equivalent

Calif. Test 229 Method of Test for Durability Index

Calif. Test 301 Method of Test for Resistance “R” Value of Treated and Untreated Bases, Subbases and Basement Soils by the Stabilometer

PART 2 - PRODUCTS

2.01 AGGREGATE BASE MATERIAL

A. Class 2 aggregate base shall be free of vegetable matter and other deleterious substances. Coarse aggregate, material contained on the No. 4 sieve, shall consist of material of which 25 percent by weight shall be crushed particles as determined by

California Test Method No. 205. Class 2 aggregate base shall conform to one of the following gradings, determined in accordance with California Test Method No. 202:

Percentage Passing Sieves for ¾" maximum

Sieve Sizes	
2 inch	**----**
1 ½ inch	**----**
1 inch	**100**
3/4 inch	**90-100**
No. 4	**35-60**
No. 30	**10-30**
No. 200	**2-9**

B. Class 2 aggregate base shall conform to the following additional requirements:

Tests	Test Method No. Calif.	Requirements
Resistance (R-Value)	301	78 min.
Sand Equivalent	217	22 min.

Tests	Test Method No. Calif.	Requirements
Durability Index	229	35 min.

2.02 SOURCE QUALITY CONTROL

A. Submit certificate of compliance for approval prior to installation of material.

PART 3 - EXECUTION

3.01 EXAMINATION

A. Call for an inspection by the Engineer and obtain written acceptance of the prepared subgrade or subbase before proceeding with the placement of aggregate base course.

B. The subgrade or subbase to receive aggregate base course, immediately prior to spreading, shall conform to the compaction and elevation tolerances indicated for the material involved and shall be free of standing water and loose or extraneous material.

3.02 INSTALLATION STANDARDS

A. Aggregate base course shall be applied over the prepared subgrade or subbase and compacted in accordance with Section 26 of the Caltrans Standard Specifications.

B. Aggregate base course shall be minimum uniform thickness after compaction of dimensions indicated. Where not indicated, compacted thickness shall be six inches for driveways/sidewalks and eight inches for roadways.

C. All compaction expressed in percentages in this section refers to the maximum dry density as determined by California Test Method No. 216.

3.03 SPREADING OF MATERIAL

A. Aggregate for base course shall be delivered as uniform mixture of fine and coarse aggregate and shall be spread in layers without segregation.

B. Aggregate base course material shall be free from pockets of large and fine material. Segregated materials shall be remixed until uniform.

C. Aggregate base material shall be moisture-conditioned to near optimum moisture content in accordance with the applicable requirements of Section 17 of the Caltrans Standard Specifications.

D. Aggregate base course six inches and less in thickness may be spread and compacted in one layer. For thicknesses greater than six inches, the base course aggregate shall be spread and compacted in two or more layers of uniform thickness not greater than six inches each.

3.04 COMPACTING

A. Relative compaction of each layer of compacted aggregate base material shall be not less than 95 percent as determined by California Test Method No. 216.

B. Thickness of finished base course shall not vary more than 3/4 inch from the indicated thickness at any point. Base which does not conform to this requirement shall be reshaped or reworked, watered, and recompacted to achieve compliance with specified requirements.

C. The surface of the finished aggregate base course at any point shall not vary more than 3/4 inch above or below the indicated grade.

3.05 FIELD QUALITY CONTROL

A. Perform field tests in accordance with ASTM D2922 to determine compliance with specified requirements for density and compaction of aggregate base material, and with ASTM D3017 to determine moisture-content compliance of the installed base course.

END OF SECTION

SECTION 32 12 16

ASPHALTIC CONCRETE PAVING

PART 1 - GENERAL

1.01 SECTION INCLUDES

A. Specifications for providing asphaltic concrete paving as indicated.

1.02 RELATED SECTIONS

A. Section 31 20 00 - Earthmoving

B. Section 32 11 23 - Aggregate Base

C. Section 32 17 23 - Pavement Marking

1.03 REFERENCES

A. State of California, Department of Transportation (Caltrans), Standard Specifications

Section 39 Asphalt Concrete

Section 92 Asphalts

Section 93 Liquid Asphalts

Section 94 Asphaltic Emulsions

B. State of California, Department of Transportation (Caltrans), Standard Test Methods

Calif. Test 202 Method of Tests for Sieve Analysis of Fine and Coarse Aggregates

Calif. Test 304 Method of Preparation of Bituminous Mixtures for Testing

Calif. Test 366 Method of Test for Stabilometer Value

Calif. Test 375 Determining the In Place Density and Relative Compaction of AC Pavement

1.04 PROTECTION

A. Protect concrete pavements and walks, curbs and bases, and other improvements adjacent to the operations with suitable materials. The Contractor shall be responsible for any damage caused by the Contractor's employees or equipment and shall make necessary repairs. Building and other surfaces shall be covered with paper or other protection, where required. All damage caused by the Contractor's operations shall be prepared or replaced as required.

PART 2 - PRODUCTS

2.01 BASE COURSE MATERIAL

A. Class 2 Aggregate Base. Percentage composition by weight of aggregate base material shall conform to the 3/4 inch maximum grading when determined by California Test 202.

2.02 TACK COAT (VERTICAL SURFACES)

A. Tack Coat: Diluted SS-1 or SS-1h emulsion or undiluted RS-1 emulsion in conformance with Section 94 or the Caltrans Standard Specifications.

2.03 ASPHALT PAVING MATERIALS

A. Paving Asphalt: All purpose, aged residue, steam refined, PG 64-16 grade, in accordance with Section 92 of the Caltrans Standard Specifications.

B. Aggregate: Type A, with the grading of the combined aggregate conforming to 1/2 inch maximum size, medium grading, as specified in Section 39 of the Caltrans Standard Specifications.

C. Mixing Facilities: Asphalt concrete surfacing material shall be furnished from an approved commercial asphalt central mixing plant.

2.04 SOURCE QUALITY CONTROL

A. Contractor shall submit Certificate of Compliance from manufacturer for approval prior to installation.

2.05 A.C. DIKE/BERM

A. A.C. dikes shall be per Caltrans Standard A87, Type B. Dikes shall be installed by means of a continuance automatic curbing machine.

B. A.C. berms shall be installed as detailed in the drawing.

PART 3 - EXECUTION

3.01 PLACING OF BASE COURSE

A. The Contractor shall call for an inspection by the Engineer and obtain written approval of the subgrade before proceeding with the base course.

B. Base course shall be minimum uniform thickness after compaction of dimensions indicated. Where not indicated, compacted thickness shall be six inches for parking stalls and eight inches for roads, driveways, and aisles of parking areas.

C. Base course shall be placed over finished subgrade and compacted in accordance with Section 32 11 00 - Aggregate Base.

D. After base course has been completed, the Contractor shall call for an inspection by the Engineer and obtain written approval before proceeding with application of the asphalt wearing surface.

3.02 PLACING ASPHALT CONCRETE

A. Areas to be paved shall be covered with a layer of hot asphalt concrete surfacing not less than the thickness indicated after compaction. Where not indicated, compacted thickness shall be two inches for parking stalls and three inches for roads, driveways, and aisles of parking areas.

B. Paving asphaltic concrete shall be delivered, laid, rolled, and finished in accordance with Section 39 of the Caltrans Standard Specifications.

C. Before placing asphalt concrete, a tack coat (paint binder) shall be applied to all vertical surfaces against which asphalt concrete surfacing will be placed. Tack coat (paint binder) shall be applied in accordance with Section 39-4 of the Caltrans Standard Specifications at the rate of from 0.02 to 0.10 gallons per square yard.

D. Finish surface of the wearing course shall be thoroughly compacted, smooth, and free from ruts, humps, depressions, cold joints, or other irregularities.

E. Finish paving shall conform to slopes, lines, and finish grades indicated, and shall drain properly. Where adjacent surfaces are intended to be flush (as at concrete gutters, walks, and paving), they shall conform smoothly at all joints.

F. Ridges, indentations, and other objectionable marks left in the surface of the asphalt concrete by paving or rolling equipment shall be eliminated by rolling. The use of equipment that leaves ridges, indentations, or other objectionable marks in the asphalt concrete shall be discontinued, and other acceptable equipment shall be employed.

G. Where cold joints are indicated or necessary, cut back the placed and compacted cold asphalt a minimum of three inches with a concrete or masonry power saw, so that a vertical face of compacted full thickness material is exposed. Treat this surface with a tack coat before proceeding with the placement of new asphaltic concrete surfacing.

H. Finish paving shall conform to finish elevations within plus or minus 0.01 of a foot and shall be level to within plus or minus 1/4 inch in 10 feet when measured with a 10 foot straightedge in any direction.

3.03 FIELD QUALITY CONTROL

A. The Contractor shall control the quality of the work and shall provide adequate testing to assure compliance with these Specifications.

B. After completion of paving work, all paving shall be flooded with water, and any resulting “ponds” shall be ringed with chalk. Such hollows shall be corrected with addition of asphalt paving materials and rerolling until all paving is completely level and free from hollows and high spots.

C. The Engineer shall perform in-place density and compaction tests of the completed pavement in accordance with California Test 375 to determine compliance with specified requirements. Test shall be performed as often as necessary to verify compliance, but not less frequently than the following:

1. One test for each street or driveway intersection for which asphalt pavement replacement is required.

2. One test for every 1,000 square yards of asphalt pavement at locations where the paved area exceeds 1,000 square yards.

3.04 MAINTENANCE OF PAVEMENT

A. Upon completion of final rolling, traffic shall not be permitted on the finished pavement for at least six hours, and until the asphalt concrete has cooled sufficiently to withstand traffic without being deformed.

B. Finished pavement shall be maintained in finished clean condition until the work is accepted by the District.

END OF SECTION

SECTION 32 16 13

CONCRETE CURBS, GUTTERS, AND WALKS

PART 1 - GENERAL

1.01 SECTION INCLUDES

A. Specifications for providing portland concrete curbs, gutter, sidewalks, driveways, and island paving, as indicated.

1.02 RELATED SECTIONS

A. Section 03 30 00 - Cast-In-Place Concrete

B. Section 32 11 23 - Aggregate Base

1.03 REFERENCES

A. American Concrete Institute (ACI):

ACI 301	Standard Specifications for Structural Concrete
ACI 318/ 381R	Building Code Requirements for Structural Concrete and Commentary

B. American Society for Testing and Materials (ASTM)

ASTM A53	Specification for Pipe, Steel, Black and Hot-Dipped, Zinc Coated, Welded and Seamless
ASTM A615/ A615M	Specification for Deformed and Plain Billet-Steel Bars for Concrete Reinforcement
ASTM A663/ A663M	Specification for Steel Bars, Carbon, Merchant Quality, Mechanical Properties
ASTM C260	Specification for Air-Entraining Admixtures for Concrete
ASTM C309	Specification for Liquid Membrane-Forming Compounds for Curing Concrete
ASTM C881	Specification for Epoxy-Resin-Base bonding Systems for Concrete

C. UCS Marin County Uniform Construction Standards, May 2008

1.04 SUBMITTALS

A. Product Data

Respective manufacturer's product data for manufactured products.

1.05 QUALITY ASSURANCE

A. Tolerances

1. Construct concrete surfaces within 1/4 inch of the indicated elevation, and deviating not more than 1/8 inch from a 10 foot straightedge placed anywhere on the surface.

2. Slab tolerances shall be as specified in ACI 301.

B. Finishes

Slab finishes shall be as specified herein accordance with the requirements of ACI 301.

PART 2 - PRODUCTS

2.01 MATERIALS

A. Provide Class of Concrete indicated on the Contract Drawings or Construction Drawings.

a. Provide air-entrainment of three percent (± one percent) with admixture conforming to ASTM C260.

b. Nominal size of large aggregate shall be 1".

c. Minimum total cement content shall be 520 pounds per cubic yard of concrete.

d. Minimum strength of concrete shall be 3000 psi.

B. Tie Bars

ASTM A615, Grade 60, of type and size indicated.

C. Dowels

Plain round bars meeting requirements of ASTM A615/A615M, Grade 60, of ASTM A663/A663M, Grade 80, epoxy-coated bars, furnished with approved snugfitting ASTM A53 galvanized pipe sleeve. Provide sleeve with one end closed.

D. Weep Holes

ASTM A53 galvanized pipe of size indicated.

E. Concrete Curing Compound

ASTM C309, Type 1.

F. Epoxy Adhesive

ASTM C881, Type V for load bearing concrete, Grade and Class as determined by project conditions and requirements.

PART 3 - EXECUTION

3.01 PREPARATION OF SUBGRADE

A. Excavate for and prepare the subgrade as specified true to the indicated grade and cross section.

B. Test completed subgrade for correct grade and cross section by means of template supported on side forms.

C. Dampen subgrade and forms just before placing concrete.

3.02 TYPES OF CONSTRUCTION

A. Provide cast-in-place concrete construction, plain or reinforced as indicated. Curbs, gutters, and walks shall be formed accurately to indicated section profile with template screed.

B. Extruded curbs and gutter, placed by an extrusion machine, may be provided where site conditions are suitable and the extrusion process is appropriate for the purpose.

3.03 JOINTS

A. Expansion Joints

1. Construct ½ inch thick expansion joints in the following locations:

a. In curb and combination curb and gutter at the locations of expansion joints in the concrete roadway.

b. In curb or combination curb and gutter, at points where curved and tangent sections join.

c. Between curb or combination curb and gutter, and any drain inlet, or similar structure occurring within the limits of the curb or combination curb and gutter.

d. At corners in sidewalks, following the projections of the building lines from the corner of the building to the curb.

e. Between sidewalks and any permanent structure.

f. Between sidewalk and curb.

2. Construct 1/4 inch thick expansion joints in the following locations:

a. Through sidewalks at intervals not greater than 15 feet.

b. In sidewalks, encircling fixtures more than 12 inches in diameter.

3. Construct expansion joints as specified in UCS, except that load transfer devices will not be required unless indicated. Shape performed filler to cross section of curbs and combination curb and gutter.

B. Contraction Joints

In sidewalks, construct contraction joints in uniform intervals not greater than six feet, by means of a suitable tool which will form a groove 1/2 inch deep and 1/4 inch wide, with the edges rounded to a 1/4 inch radius.

C. Tooling

Finish joints with an edging tool having 1/4 inch radius, leaving joints free of mortar and concrete. In preformed type joints, leave joint filler material exposed for full length of joint with clean and true edges.

D. Joint Sealing

1. Seal to within 1/8 inch of pavement surface all joints in curbs and gutters, including gutter surfaces of combination curb and gutter sections, all joints between curbs and vehicular pavement, all joints between gutters and vehicular pavement, and all other expansion joints. Do not seal other joints unless so indicated.

2. Do not seal joints until concrete curing is complete. Prior to installation of the joint sealing compound, clean the joints of dirt and other foreign material. Joints may be cleaned with compressed air jets provided that the air in such jets is free of oil or water. Do not fill joints when there is any free water in or adjacent to joints. Joint walls and all surfaces to which the sealing material is to adhere shall be surface dry for at least three hours prior to sealing.

3. Apply with approved pressurized equipment. Perform sealing joints to make them impervious to water and to prevent the sealing compound from spreading over the surface of the pavement.

3.04 FORM REMOVAL

A. Remove front curb forms not less than two or more than six hours after placing concrete, but in no case while the concrete is still plastic enough to slump.

B. Remove other forms not less than 12 hours after finishing is completed.

3.05 FINISHING

A. Curb and Combination Curb and Gutter:

1. Trowel the face of curb smooth to a depth of not less than two inches below the flow line, or the flow line of integral curb and gutter, and finish with a steel trowel, all immediately after removal of front curb forms.

2. Finish all curb edges with a radius of 1/2 inch.

3. Provide a final fine brush finish to both top and face of curb with brush strokes parallel to the line of the curb, so that both top and front face present the same uniform appearance.

4. Keep the curb face wet during above finishing operations.

5. Allow no coarse aggregate to show on the finished curb surface.

B. Sidewalk, Island Paving and Ramps

1. After the concrete has been placed, consolidated, struck off, leveled, grooved and edged as specified herein, and in UCS, do not work the concrete further until ready for floating.

2. Provide “floated finish” or light “broom finish” as indicated in accordance with the requirements of ACI 301.

3. For pedestrian and wheelchair ramps, and all other surfaces where the Contract Drawings require a non-slip finish, provide a “non-slip finish” in combination with a “floated finish” or “broom finish” in accordance with the requirements of ACI 301.

4. Broom finish shall be applied perpendicular to the direction of traffic flow.

C. Joints and Edges

As soon as the condition of the work permits, perform joint work, edging and marking. Finish all edges with a radius of 1/4 inch.

3.06 CURING AND PROTECTION

A. Comply with the applicable requirements for curing concrete with liquid membrane-forming curing compound. Do not permit traffic on new concrete pavement until the concrete has cured a minimum period of ten days.

B. Provide damp curing only for concrete slab surfaces indicated to be treated with concrete hardener and dust proofer.

3.07 FIELD QUALITY CONTROL

A. The engineer shall perform inspections and tests. The Contractor shall provide such samples and services to facilitate testing.

END OF SECTION

SECTION 32 84 00
PLANTING IRRIGATION

SECTION 328400 - PLANTING IRRIGATION

PART 1 - GENERAL

1.1 RELATED DOCUMENTS

A. Drawings and general provisions of the Contract, including General and Supplementary Conditions and Division 01 Specification Sections, apply to this Section.

1.2 SUMMARY

A. Section Includes:
1. Backfill
2. Pipes and fittings
3. Pipe sleeves
4. Valves
5. Remote control valves
6. Miscellaneous piping specialties
7. Sprinklers and bubblers
8. Quick couplers
9. Drip irrigation
10. Controllers and enclosure
11. Electrical conduit, wiring, and water proof wire connectors
12. Boxes for valves and wiring
13. Marking and identification products
14. Maintenance period

1.3 DESCRIPTION OF WORK

A. Furnish all labor, materials, supplies, equipment, tools, and transportation, and perform all operations in connection with and reasonably incidental to the complete installation of the irrigation system, and guarantee/ warranty.

B. Connect electrical power supply and data lines to irrigation controller.

C. Testing of the irrigation system to assure proper operation. Programming of controller and set-up and testing of sensors.

D. All necessary parts that are required to complete, modify, repair, and restore either existing and/ or new irrigation system shall be furnished and installed. All new and existing systems shall meet industry standards and be in operating order at the completion of maintenance period.

E. Maintain and repair irrigation system as needed during maintenance period.

F. Related Sections:
1. Division 01 - Section "Tree and Plant Protection"
2. Division 03 - Section "Cast-in-Place Concrete"
3. Division 31 - Section "Earth Moving"
4. Division 32 - Section "Planting"

1.4 SUBMITTALS

A. Materials list:
1. Contractor shall submit to Landscape Architect complete list of all irrigation system materials and processes proposed to be furnished and installed as part of contract. List shall be provided and approved by Landscape Architect before ordering irrigation system materials.
2. Submittals shall have the following information:
   a. The catalog cut sheets shall identify product from the most recent manufacturer's catalog or from manufacturer's web-site.
   b. The catalog cut sheets shall clearly indicate the manufacturer's name and item model number. The model number, specified options and specified size shall be clearly indicated on catalog cut sheets.
   c. Submittal format requirements:
      1) Title Sheet with job name, contractor's name, contractor address and telephone number, submittal date, and submittal number.
      2) Submittals shall be provided as one complete package for the project
      3) Submittal package shall be stapled or bound in such a way as to allow for disassembly for review processing. Submittal maybe sent as a single .pdf file and electronically transmitted.
      4) Submittal package shall have all pages numbered in the lower right hand corner.
   d. The Landscape Architect will allow no substitution without prior written acceptance.
   e. The Landscape Architect will not review the submittal package unless provided in the format described above.

B. Photo Documentation

1.5 DELIVERY, STORAGE, AND HANDLING

A. Deliver piping with factory-applied end caps. Maintain end caps through shipping, storage, and handling to prevent pipe-end damage and to prevent entrance of dirt, debris, and moisture.

B. Store plastic piping protected from direct sunlight. Support to prevent sagging and bending.

1.6 PROJECT CONDITIONS

A. Interruption of Existing Water Service: Do not interrupt water service to facilities occupied by Owner or others unless permitted under the following conditions and then, only after arranging to provide temporary water service according to requirements indicated:
   1. Notify Owner no fewer than 7 days in advance of proposed interruption of water service.
   2. Do not proceed with interruption of water service without Owner's written permission.

1.7 TESTS AND INSPECTIONS

A. The Contractor is responsible for notifying the Landscape Architect for site visits to review work as follows. Provide Landscape Architect 48 hours minimum notice to schedule these visits.
   1. Pre-construction conference with general contractor, grading contractor, landscape contractor, and landscape architect.
   2. Staking
      a. Set stakes to identify locations of proposed point of connection, backflow preventer, master valve and flow sensor assembly, controller, quick coupler, remote control valves, isolation valves, and mainline pipe.
   3. Mainline Pressure/ Leak Test: After installation of mainline pipe, valves, and remote control valves.
      a. Perform test after welded plastic pipe joints have cured at least 24 hours, or longer if manufacturer of solvent cement requires.
      b. Leak Test procedures:
         1) Charge system slowly to avoid water hammer.
         2) Bleed system to remove air from pipes.
         3) Maintain pressure in mainline pipe for 24 hour duration
         4) Pressurize system to 125% of design pressure for one hour using hydraulic pump or other safe method.
         5) Visually inspect all parts of irrigation system while the system is pressurized.
         6) Repair any leaks found in mainline irrigation system.
   4. Operational Test: After electrical circuitry has been energized, operate controllers and automatic control valves to confirm proper system operation.
      a. If operation test presents problems contractor shall contact a factory-authorized service representative to inspect, test, and adjust components, assemblies, and equipment installations, including connections.
   5. Coverage Test: After completion of irrigation system a coverage test shall be performed to determine uniform and complete coverage of landscape area.
      a. 24 hours before test, run irrigation system at least once in all landscape planters.
      b. Landscape Architect shall review and approve all planters before plant material, bark mulch, gravel, or decomposed granite is installed.
   6. Test and adjust controller and irrigation equipment. Replace damaged and malfunctioning irrigation components and equipment.

1.8 PROJECT WARRANTY

A. Contractor to furnish and install all work free of defects in materials and workmanship for period of 1-year from start of Maintenance Period per Div. 32- Section "Planting". Contractor to warranty all work furnished in accordance to the drawings and specifications. Ordinary wear and tear, neglect from maintenance, abuse, and vandalism are exempt from the contractor warranty. Repair and replacement of defective work and material will be done by the contractor at no cost to the owner. Repairs and replacement shall be conducted within 48 hours of notification to contractor.

PART 2 - PRODUCTS

2.1 QUALITY ASSURANCE

A. Materials used in the system shall be new and free of flaws and defects of any type.

2.2 BACKFILL MATERIAL

A. Backfill shall be either screened on-site material or imported.

B. Backfill material shall be free of organic materials, large clods of earth or rocks larger than one (1) inch diameter, trash, construction debris, asphalt, or concrete.

C. Imported material shall be a clean loam soil.

2.3 PIPE AND FITTINGS

A. Comply with requirements in the drawing for applications of pipe and fitting materials, and for joining methods for specific services, service locations, and pipe sizes.

B. Use a dielectric union wherever a copper-based metal (copper, brass, bronze) is joined to an iron-based metal (iron, galvanized steel, stainless steel).

C. Assemblies calling for threaded pipe connections shall utilize PVC Schedule 80 nipples and PVC Schedule 80 threaded fittings.

D. Joint sealant: Use only Teflon-type tape pipe joint sealant on plastic threads. Use non-hardening, nontoxic pipe joint sealant formulated for use on water-carrying pipes on metal threaded connections.

E. PVC Pipe: ASTM D 1785, PVC 1120 compound, Class 315, schedule 40, schedule 80, with integral belled end.
   1. PVC Socket Fittings: ASTM D 2466, Schedule 80.
   2. PVC Threaded Fittings: ASTM D 2464, Schedule 80.
   3. Use Schedule 40 and SCH 80, Type 1, PVC solvent weld fittings conforming to ASTM Standards D2466 and D1784. Use primer approved by the pipe manufacturer. Solvent cement to conform to ASTM Standard D2564.

F. PVC Threaded Nipples: PVC Schedule 80 nipples shall be extruded. PVC Schedule 80 nipples shall be made from NSF approved PVC compound conforming to ASTM D1784, Cell Classification 12454B.

G. Mainline detection tape:
   1. Manufacturer: TChristy. Model# TA.DT.2.BI. 5 mil (.005") thick tape with aluminum foil core and polyethylene backing, 2" width, and shall say "Caution Irrigation Line Buried Below".

2.4 IRRIGATION PIPE SLEEVE

A. Corrugated HDPE with dual wall construction for irrigation sleeves eight (8) inches and larger.

B. PVC schedule 40 for irrigation sleeves six (6) inches and smaller.

2.5 REMOTE CONTROL VALVES

A. Manufacturers: Refer to drawings for manufacturer, model, and size of remote control valves.

B. Remote control valve to be in normally closed position.

C. Remote control drip zone shall have forty (25) psi pressure regulator and a filter cartridge with a minimum of 120 mesh. Size valve, pressure regulator and filter for drip zone flow rate.

2.6 QUICK COUPLERS

A. Manufacturers: Refer to drawings for manufacturer, model, and size of quick coupler.

B. Description: Factory-fabricated, bronze or brass, two-piece assembly. Include coupler water-seal valve; removable upper body with spring-loaded or weighted, locking rubber-covered cap; hose swivel with ASME B1.20.7, 3/4-11.5NH threads for garden hose on outlet; and operating key.

2.7 SPRINKLERS AND BUBBLERS

A. General Requirements: Designed for uniform coverage over entire spray area indicated at available water pressure.

B. Plastic, Pop-up Spray Sprinklers:
   1. Refer to drawings for manufacturer, model, and size of pop-up spray sprinklers and bubblers.

2.8 DRIP IRRIGATION SYSTEM

A. Manufacturers: Refer to drawings for manufacturer, model, and size of drip irrigation system and associated components.

B. Drip Tubes with Inline Emitters:
   1. Tubing: Flexible Polyethylene tubing.
   2. Emitter spacing: 12", 18", or 24" on center as specified on drawings.
   3. Emitters: Check valve and pressure compensation.

C. Fittings: Drip tubing fittings shall be per manufacturer's specifications.

D. Filter Units: Plastic housing, with corrosion-resistant internal parts; of size and capacity required for devices downstream from unit.

E. Air Relief Valves: Plastic housing, with corrosion-resistant internal parts.

F. Vacuum Relief Valves: Plastic housing, with corrosion-resistant internal parts.

2.9 IDENTIFICATION PRODUCTS

A. Remote control valve tags:
   1. Manufacturer: TChristy. Model# ID.STD.Y1. Plastic tag attached by nylon tie to valve, hot stamped lettering, tag color: yellow. Tag to identify valve based on drawings controller letter and valve numbering.

B. Backflow History Tag
   1. Manufacturer: TChristy. Model# ID.BFHT.1. Plastic tag attached directly and permanently to backflow.

2.10 AUTOMATIC IRRIGATION CONTROLLERS

A. Manufacturer: Refer to drawings for manufacturer and model of automatic irrigation controller.

B. ET Sensor Manufacturer: Refer to drawings for manufacturer and model of ET sensor.

C. Remote control. Refer to drawings for manufacturer and model of hand held remote control.

D. Enclosure Manufacturer: Strong Box Model# SB-18SSW.
   1. Stainless steel locking enclosure, 18" wide x 36" high x 12" deep.
   2. Waterproof enclosure, with locking cover and matching keys; refer to drawings and manufacturer's grounding requirements.

E. Two Wire Cable
   1. Controller to decoder wire use 14 gauge solid copper insulated wire, twisted together, loose tube-high density polyethylene jacket. Paige Electric Co., model P7354D.

2. Decoder to Solenoid wire use 14 gauge solid copper insulated wire, parallel wire held by webbing, in various color. Paige Electric Co., model ICD.
3. Where spliced wires are required, splices shall be housed in a grey plastic electric pull box.
4. Waterproof wire connector manufacturer: 3M Direct Bury Splice Kit. Model# DBR/Y-6.

2.11 CONDUIT

A. All conduit and fittings to be PVC schedule 40, color: grey.

B. Pull tape manufacturer: Fibertek, Inc. Model# WP1250.
1. Electrical pull tape to be 1/2" woven polyester tape with a minimum of 1250 pounds tensile strength and less than 0.10 coefficient of friction.
2. All pull tape to be continuous with out slicing or knots.
3. Provide couplers or bushings on cut pipe end to prevent damage to wires.

2.12 GROUNDING

A. Earth grounding for irrigation equipment shall meet or exceed article 250 of National Electrical Code (NEC) and be UL listed.

B. Grounding rod shall be minimum copper clad 5/8" diameter by 10 feet long.

C. OR Grounding plate

D. Bare Copper Wire shall be minimum 6 gauge soft-annealed uncoated wire.

E. Grounding rod connection to be exothermic weld or clamp.
1. Grounding rod clamp shall be brass and must securely attach grounding rod and wire.

F. Grounding to have a resistance of 25 ohms or less.

G. Back fill shall be highly conductive material. Where needed use electrical grounding backfill products like Powerfill by Loresco.

2.13 BOXES VALVES AND ELECTRICAL PULL

A. Electrical Pull Box:
1. Manufacturer: Carson. Body model# 910-10 and lid model# 910-4B. Bolt down kit, T-cover lid, body and lid color: grey.
2. Or equal

B. Remote Control Valve:
1. Manufacturer: Carson. Body model# 1220-12 and lid model# 1220-4B. Bolt down kit, T-cover lid, body and lid color: green.

C. Quick coupler:

1. Manufacturer: Rainbird. Body model# VB-STD. Bolt down kit, T-cover lid, body color: black and lid color: green.

D. Isolation Valve:
1. Manufacturer: Rainbird. Body model# VB-10RND. Bolt down kit, T-cover lid, body color: black and lid color: green.

E. Flush Valve:
1. Manufacturer: Rainbird. Body model# VB-10RND. Bolt down kit, T-cover lid, body color: black and lid color: green.

F. Air/ Vacuum Relief Valve:
1. Manufacturer: Rainbird. Body model# VB-7RND. T-cover lid, body color: black and lid color: green.

G. Subterranean Drip Emitter Box:
1. Manufacturer: Rainbird. Body model# SEB 7XB. T-cover lid, body color black and lid color: green.

H. Drain rock shall be 3/4" washed crushed rock.

I. Hardware cloth shall be galvanized 16 gauge 1/4" mesh.

J. Use valve box extension where needed to install boxes at proper height.
1.

PART 3 - EXECUTION

3.1 GENERAL

A. Irrigation system shall meet all federal, state, and local codes, regulations and ordinances.

B. Verify all underground utilities by contacting Common Ground Alliance (C.G.A.) at 811 a minimum of 2 working days before any excavation work begins on site.

C. If contractor finds utilities on site that are not shown on plans, contractor shall contact Landscape Architect. Found utilities that cross irrigation lines shall be shown on Record Drawings.

D. Verify water pressure and available flow prior to construction. Notify Landscape Architect if water pressure or flow will prevent the irrigation system from functioning properly.

3.2 EARTHWORK

A. Excavating, trenching, and backfilling are specified in Division 31 - Section "Earth Moving."

B. Install warning tape directly above pressure piping, 12" below finished grades and above irrigation pipe.

3.3 PREPARATION

A. Set stakes to identify locations of proposed point of connection, backflow preventer, master valve and flow sensor assembly, controller, quick coupler, remote control valves, isolation valves, and mainline pipe. Contact Landscape Architect within 48 hours for approval before excavation.

3.4 WATER, ELECTRICAL, & COMMUNICATION CONNECTIONS

A. Water Supply
   1. Contact the Owner a minimum of five (5) working days before beginning any work that will disrupt existing irrigation system.

B. Electrical Supply
   1. Contractor is responsible for coordination of electrical supply connection to controller enclosure.
   2. Electrical work shall be preformed by licensed electrical contractor. Material and workmanship for electrical service shall meet all federal, state, and local codes, regulations and ordinances.

C. Communication
   1. Contractor is responsible for coordination of data line connection to controller enclosure.

3.5 PIPING INSTALLATION

A. Install piping free of sags and bends. Lay piping on solid sub-base, uniformly sloped without humps or depressions.

B. Install groups of pipes parallel to each other and with a minimum of 4" of separation. Pipes shall not lie on top of another pipe.

C. Install fittings for changes in direction and branch connections.

D. Install PVC piping in dry weather when temperature is above 40 deg F. Allow joints to cure at least 24 hours at temperatures above 40 deg F before testing.

E. Install piping in sleeves under parking lots, roadways, and sidewalks.

F. Remove all rough edges and burrs from PVC pipe by reaming cut ends. All irrigation pipe cuts shall be square. Remove all debris from pipe before installing.

G. PVC pipe shall not lie on top of another pipe. All pipe should have 4" separation between pipes.

H. Cap all pipe ends during construction to prevent debris from entering pipe.

I. Snake pipe in trench one (1) foot per every one hundred (100) feet for thermal expansion.

J. Mainline changes in depth and direction shall be done with 45 degree fittings.

3.6 JOINT CONSTRUCTION

A. Ream ends of pipes and tubes and remove burrs.

B. Threaded Joints: Thread pipe with tapered pipe threads according to ASME B1.20.1. Join pipe fittings and valves as follows:
   1. Apply appropriate PTFE/ Teflon tape or thread compound to external pipe threads. Provide three wraps around male thread.
   2. Tighten joints to hand tight, plus one turn with a strap wrench
   3. Damaged Threads: Do not use pipe or pipe fittings with threads that are corroded or damaged. Do not use pipe sections that have cracked or open welds.

C. PVC Piping Solvent-Cemented Joints: Clean and dry joining surfaces. Join pipe and fittings according to the following:
   1. Comply with ASTM F 402 for safe-handling practice of cleaners, primers, and solvent cements.
   2. PVC P Piping: Join schedule number, ASTM D 1785, PVC pipe and PVC socket fittings according to ASTM D 2672
   3. Allow 30 minute cure time for handling and 24 hours of cure time before allowing water in the pipe.

3.7 CONDUIT

A. Remove all rough edges or burrs from conduit pipe by reaming cut ends. All conduit cuts shall be square.

B. Install coupler or bushing on cut pipe ends.

C. All 2-wire cable shall be in PVC conduit.

3.8 SLEEVES

A. Install sleeve in all locations where irrigation pipe and controller wire cross beneath pavement or other hardscape elements.

B. Irrigation controller wire shall not share sleeve with 120 volt and higher voltage wire.

C. Contractor shall coordinate the installation of sleeves with other trades.

D. Sleeves shall have minimum of 25% void space. Contractor is responsible for sizing sleeve based on field conditions. Size sleeve based on conduit and irrigation pipe size.

3.9 BACKFILLING

A. Backfill shall be of approved screen material.

B. With the exception of center loading, irrigation trenches shall not be backfilled until completion and passing of tests.

C. Trench should be cleaned of debris before backfilling.

D. Backfill shall be compacted in 6" lifts using vibrating plate. Compaction of backfill shall be equal to adjacent undisturbed soil.

E. Contractor shall correct any settling with more backfill and compaction.

3.10 REMOTE CONTROL VALVES

A. Flush mainline before installing remote control valves

B. Install valves in landscape planter. Do not install valves in roadways or paved areas.

C. Group remote control valves and other valves whenever possible.

D. Install per drawings and manufacturer's specifications.

E. Install valve in valve box to provide proper operation and maintenance of valve.

F. First downstream fitting past valve shall be located min. 18" from valve.

3.11 SPRINKLER INSTALLATION

A. Install sprinklers after hydrostatic testing is completed.

B. Flush lateral pipe before installing sprinklers.

C. Set sprinklers perpendicular to finish grade.

D. Install sprinklers at manufacturer's recommended heights.

E. Locate part-circle sprinklers to maintain a minimum distance of 4 inches from walls and 2 inches from other boundaries unless otherwise indicated.

F. Adjust the radius and throw of each sprinkler for best performance. Minimum of 70% low quarter distribution uniformity (DULQ) of spray irrigation. Post-installation irrigation audit may be conducted to confirm (DULQ) of spray irrigation.

G. Install per drawings and manufacturer's specifications.

3.12 DRIP IRRIGATION

A. Flush lateral before installing drip tubing.

B. Install drip tubing on uniformly prepared bed. Drip tubing emitters should be offset to create a triangular spacing.

C. Install fitting for all 90 degree changes of direction in line.

D. Use 6" wire staples every three (3) feet to secure drip tubing.

E. Install air relief and vacuum relief valves in valve boxes, at highest point of landscape planter.

F. Install automatic flush and ball valves at drip exhaust header. Refer to drawings for location of flush valves.

G. The pressure at the end of the drip tubing should have a maximum of 20% drop in pressure from the beginning of the drip line.

H. Install per drawings and manufacturer's specifications.

3.13 AUTOMATIC IRRIGATION CONTROLLER

A. Equipment Pedestal Mounting: Install on 6" thick concrete pad. Refer to drawings for location.
   1. Place and secure anchorage devices. Use setting drawings, templates, diagrams, instructions, and directions furnished with items to be embedded.
   2. Install anchor bolts for proper attachment to supported equipment.
   3. Orient enclosure to provide access to controller.

B. Equipment Wall Mounting: Install wall mounted controller on building wall shown on plans and coordinated with building owner representative.
   1. Place and secure anchorage devices. Use setting drawings, templates, diagrams, instructions, and directions furnished with items to be embedded.
   2. Install anchor bolts for proper attachment to supported equipment.
   3. Orient enclosure to provide access to controller.

C. Provide connection to electrical power supply and data line as required by controller.

D. All remote control valves, master valves, and flow sensors to be connected to controller.

E. Install all ET sensor, weather stations, and rain/ freeze sensor equipment. Contractor to program and fine tune controller to operate with sensor equipment during maintenance period. Fine tuning of schedule and ET sensor should be completed at the end of maintenance period.

F. Irrigation schedule shall not exceed water budget established for project. Water budget and irrigation schedule shown on plans.

G. Install per drawings and manufacturer's specifications.

3.14 FIELD QUALITY CONTROL

A. Contractor to make adjustments to irrigation components to provide optimum performance of system. Adjust irrigation components to prevent excessive watering onto paved surfaces, windows, and building walls.

B. Adjust sprinklers and devices, except those intended to be mounted aboveground, so they will be flush with, or not more than 1/2" above, finish grade or compacted mulch.

C. Any irrigation product will be considered defective if it does not pass tests and inspections.

D. Improperly installed equipment shall be reinstalled or replaced to meet Construction Documents.

3.15 CLEANING

A. Flush dirt and debris from piping before installing sprinklers and other devices.

B. Upon completion of work, remove all site machinery, tools, construction material, and any rubbish.

3.16 MAINTENANCE

A. Provide maintenance as per Division 32 - Section "Planting"

3.17 RECORD DRAWINGS

A. Prior to Pre-Maintenance Review, obtain from the Owner’s Authorized Representative a reproducible copy of the Drawings. Using computer aided drafting, duplicate information contained on the Record Drawings maintained on site.

B. Label each sheet "Record Drawing".

C. Record pipe and wiring network alterations. Record work which is installed differently than shown on the construction drawings. Record accurate reference dimensions, measured from at least two permanent reference points, of each irrigation system valve, each backflow prevention device, each controller or control unit, each sleeve end, and other irrigation components enclosed within a valve box.

3.18 ITEMS FURNISHED TO OWNER

A. The following items to be furnished to the Owner by the contractor at the completion of the project:
   1. Two (2) keys to the control and enclosure

2. Two (2) quick coupler keys and hose swivels
3. One (1) isolation valve opening key
4. One (1) hand held remote control for controller, if specified.
5. One (1) of each specialized tool used to adjust irrigation equipment
6. All manuals for irrigation equipment
7. One (1) copy of irrigation schedule
8. One (1) copy of the approved irrigation submittal.

3.19 CONTROLLER CHARTS

A. Prior to completion of the maintenance period, prepare a reduced copy of the as-built plans, with valve numbering/zones clearly highlighted at the reduced scale. The reduced plan shall be sized to fit flat within the controller, laminated in plastic, and placed in the controller.

END OF SECTION

SECTION 32 90 00 - PLANTING

PART 1 - GENERAL

1.1 RELATED DOCUMENTS

A. Drawings and general provisions of the Contract, including General and Supplementary Conditions and Division 01 Specification Sections, apply to this Section.

1.2 SUMMARY

A. Provide all labor, material, equipment and services necessary to provide all landscape planting, complete in place, as shown and specified, as necessary to maintain the organic status of the adjacent Farm.

B. Section Includes:
1. Planting and landscape areas.
2. Hydroseeding.
3. Sodding.
4. Landscape fabric.
5. Landscape edgings.
6. Tree root barriers.
7. Tree stabilization.
8. Decomposed granite.
9. Cobble/rock.

C. Subgrade Elevations
1. Excavation filling and grading required to establish elevations is shown on drawings. Coordinate all work with grading contractor in order to arrive at rough grades that will allow tolerance for topsoil in planting areas, soil amendments and ornamental mulch as required in other sections of this specification. Contractor to assume tolerance of rough grades established at +/- .1 feet (1 tenth of a foot).

D. Related Sections:
1. Division 01 Section "Tree and Plant Protection" for protection of existing trees and plant materials.
2. Division 31 Section "Site Clearing" for topsoil stripping and stockpiling.
3. Division 31 Section "Earth Moving" for excavation, filling and backfilling, and rough grading.
4. Division 32 Section "Planting Irrigation" for irrigation.

1.3 SUBMITTALS

A. Informational submittals shall include but not be limited to the following:
1. Soil Fertility and Agricultural (Horticultural) Suitability Analysis.

a. After completion of rough grading and prior to soil preparation, the Contractor shall obtain agronomic soils tests for planting areas. A minimum of two (2) samples of planting areas shall be required. Tests shall be performed by an approved agronomic soils testing laboratory and shall include a complete soil suitability analysis with written recommendations for soil amendment, fertilizer and chemical conditioner, application rates for soil preparation, and post-maintenance fertilizer program.
b. The soils report recommendations shall take precedence over the minimum soil amendment and fertilizer application rates, as specified, when they exceed the specified minimums.
c. The Soil Analysis report shall be submitted to the Landscape Architect in a timely manner to make necessary adjustments to the project documents.
d. The Soil Analysis report shall be submitted to the Landscape Architect as part of the Certificate of Completion requirements. The Landscape Architect shall submit documentation verifying implementation of the soil analysis report recommendation to the local agency with the Certificate of Completion.

2. Plant materials: Include botanical and common name, quantities, sizes, quality, and sources for all plant materials.
3. Seed mixtures for sod and hydroseed: Botanical and common name, percentage by weight, percentages of purity, germination and weed seed for each grass seed species.
4. Landscape fabric.
5. Landscape edgings (except concrete): Type, size, manufacturer, required stakes (if any).
6. Tree root barriers: Type, size, manufacturer.
7. Tree staking.
8. Decomposed granite.
9. Stabilizer for decomposed granite.
10. Submit other data substantiating that materials comply with specified requirements. Such certificates may be tags, labels, and/or manufacturers literature. All submittals shall be reviewed and accepted by Landscape Architect before contractor begins work.
11. Planting schedule: Submit proposed planting schedule at least two weeks prior to planting any materials, indicating dates for each type of landscape work during normal seasons for such work in areas of the site. Correlate with specified maintenance periods to provide maintenance from date of substantial completion. If dates need to be revised after acceptance of planting schedule, document reasons for delays and submit for acceptance.

B. Material submittals shall include but not be limited to the following:
1. Soil amendments: Type, size, composition, and manufacturers or vendor's certified analysis. 1-pint in sealed labeled plastic bag.
2. Mulch: 1-pint in sealed labeled plastic bag.
3. Landscape fabric: 8"x8" square
4. Cobble/Rock: Type and size. 1-pint, or as required to accommodate representative sample in sealed labeled plastic bag.

1.4 SITE VISITS

A. The Contractor is responsible for notifying the Landscape Architect for site visits to review work as follows. Provide Landscape Architect 48 hours minimum notice to schedule these visits, unless otherwise indicated.
   1. Pre-construction conference with general contractor, grading contractor, landscape contractor, and landscape architect, at project site. 7 days minimum notice. The purpose of this conference will include:
      a. Review of Contractor's questions regarding project.
      b. Review of administrative and inspection procedures that will occur during construction.
      c. Review of Contractor's work schedule for project.
      d. Tour, inspect, and discuss site conditions (if necessary).
   2. Review of soil sampling.
   3. Review of planting stock at nursery, or upon arrival on site.
   4. Review of all landscape areas in preparation for planting.
      a. All landscape areas have been cleaned of all construction debris, including gravel, concrete, concrete washout, cement plaster, paint, asphalt, etc.
      b. Fine grading- allow for inclusion of all amendments, settling, etc.
      c. Irrigation coverage.
      d. Review of base preparation and edging for synthetic turf.
   5. Review of plant material locations.
      a. The Landscape Architect may adjust locations of any plant materials prior to installation.
   6. Punch list at substantial completion (prior to installation of bark mulch). 7 days minimum notice.
   7. Final completion. Final review of entire project, including grading, irrigation, planting and completion of all punch list items (to begin Maintenance Period). 7 days minimum notice.
   8. Final acceptance of project (at end of Maintenance Period). 7 days minimum notice.
      a. Final application shall have been made to all landscape areas with slow-release maintenance fertilizer.

1.5 QUALITY ASSURANCE

A. Subcontract: Subcontract landscape work to a single firm specializing in commercial landscape installation.

B. Soil-Testing Laboratory Qualifications: An independent laboratory or university laboratory, recognized by the State Department of Agriculture, with the experience and capability to conduct the testing indicated and that specializes in types of tests to be performed.

C. Soil Analysis: For each unamended soil type, furnish soil analysis and a written report by a qualified soil-testing laboratory stating percentages of organic matter; gradation of sand, silt, and clay content; cation exchange capacity; sodium absorption ratio; deleterious material; pH; and mineral and plant-nutrient content of the soil.
   1. Testing methods and written recommendations shall comply with USDA's Handbook No. 60.

2. The Landscape Architect shall oversee soil sampling, with depth, location, and number of samples to be taken. A minimum of two representative samples shall be taken from varied locations for each soil to be used or amended for planting purposes.
3. Report suitability of tested soil for plant growth.

    a. Based on the test results, state recommendations for soil treatments and soil amendments to be incorporated. State recommendations in weight per 1000 sq. ft. or volume per cu. yd. for nitrogen, phosphorus, and potash nutrients and soil amendments to be added to produce satisfactory planting soil suitable for healthy, viable plants.
    b. Report presence of problem salts, minerals, or heavy metals, including aluminum, arsenic, barium, cadmium, chromium, cobalt, lead, lithium, and vanadium. If such problem materials are present, provide additional recommendations for corrective action.

D. Source Quality Control:
1. General: Comply with regulations applicable to shipping of landscape materials.
2. Analysis and Standards: All materials shall be of standard, approved and first-grade quality and shall be in prime condition when installed and accepted. Any commercially processed or packaged material shall be delivered to the site in the original unopened container bearing the manufacturer's guaranteed analysis. The Contractor shall supply the Landscape Architect with analytical data from an approved laboratory source illustrating compliance of bearing the manufacturer's guaranteed analysis of all supplied materials.

E. Topsoil: Obtain topsoil only from naturally, well-drained sites where topsoil occurs in a depth of not less than 4"; do not obtain from bogs or marshes. The Landscape Architect reserves right to have topsoil tested and analyzed by an independent laboratory before delivery to site.

F. Trees, Shrubs and Plants: Provide trees, shrubs and plants of quantity, size, genus, species and variety shown and scheduled for landscape work and complying with recommendations and requirements of ANSI Z60.1-1980 "American Standard for Nursery Stock". Provide healthy, vigorous stock, grown in recognized nurseries in accordance with good horticultural practice and free of disease, insects, insect eggs, larvae and defects such as knots, sun-scald, injuries, abrasions, overlapping surface roots, or disfigurement. Central leaders of all trees shall be intact, undamaged, with evenly spaced lateral branches.

G. The contractor is responsible for ordering and reserving plant materials immediately upon bid award to insure plant materials meet size and quality requirements as specified herein. Plant material of substandard size will be rejected.

H. Label at least one tree and one shrub of each variety in each grouping with a securely attached waterproof tag bearing legible designation of botanical and common name. Where formal arrangements and consecutive order of trees is shown, select stock for uniform height/spread, and label with number to assure symmetry in planting.

I. Stock review: The Landscape Architect will review all plant materials either at place of growth or at site before planting for compliance with requirements for genus, species,

variety, size and quality. Landscape Architect retains right to further review trees and shrubs for size and condition of balls and root systems, insects, injuries and latent defects, and to reject unsatisfactory or defective material at any time during progress of the work. Remove rejected vegetation immediately from project site. Contractor shall request review of such stock by Landscape Architect by delivering notice in writing 48 hours in advance.

1.6 DELIVERY, STORAGE, AND HANDLING

A. Seed and Other Packaged Materials: Deliver packaged materials in original, unopened containers showing weight, certified analysis, name and address of manufacturer, and indication of conformance with state and federal laws, as applicable. Protect materials from deterioration during delivery, and while stored on site.

B. Sod: Deliver sod in time for planting within 24 hours of harvesting. Protect sod from breakage and drying.

C. Bulk Materials:
   1. Do not dump or store bulk materials near structures, utilities, walkways and pavements, or on existing turf areas or plants.
   2. Provide erosion-control measures to prevent erosion or displacement of bulk materials, discharge of soil-bearing water runoff, and airborne dust reaching adjacent properties, water conveyance systems, or walkways.
   3. Accompany each delivery of bulk fertilizers and soil amendments with appropriate certificates.

D. Trees and Shrubs: Do not prune prior to delivery. Do not bend or bind trees or shrubs in such manner as to damage bark, break branches or destroy natural shape. Provide protective covering during delivery, and provide protection on site from traffic, pedestrians, and deleterious effects of climate while planting operations are in progress. Dropped or damaged stock will not be accepted.

E. Deliver trees and shrubs after preparations for planting have been completed and plant immediately after approval of plant materials locations. If planting is delayed more than 6 hours after delivery, set trees and shrubs in shade, protect from weather and mechanical damage, and keep roots moist by covering with mulch, burlap or other acceptable means of retaining moisture. Do not remove container grown stock from containers until planting time.

F. Plant material shall not be stored on the jobsite for more than 48 hours before planting. Contractor shall schedule nursery deliveries in sub-groups as necessary to comply with this requirement. Plant materials that have been damaged in any way will be discarded and if installed, shall be replaced with undamaged materials at the Contractor’s expense.

G. Synthetic Turf: Deliver and store components with labels intact and legible. Protect from damage during delivery, storage, handling and installation. Protect from damage by other trades. Inspect all delivered materials and products to ensure they are undamaged and in good condition. Comply with manufacturer's recommendations.

1.7 PROJECT CONDITIONS

A. Proceed with and complete landscape work as rapidly as portions of site become available, working within seasonal limitations for each kind of landscape work required.

B. Contractor shall verify locations of all existing utilities, whether shown on plans or not.

C. After determining location of underground utilities, perform work in a manner which will avoid possible damage. Hand excavate, as required. Maintain grade stakes set by others until removal is mutually agreed upon by parties concerned.

D. Excavation: When conditions detrimental to plant growth are encountered, such as rubble fill, adverse drainage conditions, or obstructions, notify Landscape Architect before planting.

E. No landscape materials may be planted before an irrigation operation and coverage test is completed and approved by the Landscape Architect.

F. No landscape materials may be planted before finish grade is inspected and approved by the Landscape Architect.

G. Planting Time: Plant or install materials during normal planting seasons for each type of landscape work required.

H. Coordination with Lawns: Plant trees and shrubs after final grades are established, after irrigation system is operable, and prior to planting of lawns, unless otherwise acceptable to Landscape Architect. If planting of trees and shrubs occurs after lawn work, protect lawn areas and promptly repair damage to lawns resulting from planting operations.

I. Weather Limitations: Proceed with planting only when existing and forecasted weather conditions permit planting to be performed when beneficial and optimum results may be obtained. Apply products during favorable weather conditions according to manufacturer's written instructions.

1.8 SPECIAL PROJECT WARRANTY

A. Warranty all plant materials and other materials installed under the Contract for a period of one year (from beginning of maintenance period) against defects including death and unsatisfactory growth, or faulty performance, inferior materials and/or workmanship or improper maintenance resulting from neglect, abuse or damage by others, as determined by the Landscape Architect. Materials shall be replaced at the Contractor's expense.

B. Synthetic Turf: Contractor shall provide a warranty to Owner covering defects in materials and workmanship for a period of eight (8) years from the date of substantial completion. Turf manufacturer must verify that their representative has inspected the installation and that the work conforms to the manufacturer's requirements. The

manufacturer's warranty shall include general wear, and damage caused from UV degradation. The warranty excludes vandalism.

C. Replacement: Any materials found to be dead, missing, or not in a satisfactory or healthy condition during the maintenance period shall be replaced immediately. The Landscape Architect shall be sole judge as to the condition of material. Material to be replaced within the guarantee period shall be replaced by the Contractor within five (5) days of written notification by the Landscape Architect. All replacement materials and installations shall comply to the Plans and Specifications. Any plant missing due to suspected theft shall be replaced by the Contractor. If the Contractor suspects that theft may be a problem, the Contractor shall provide written documentation to the Landscape Architect that security on this site needs to be intensified. The Contractor may relieve himself of theft responsibility if after the security notice, with no result, a written notice to the Landscape Architect shall be given that plant material will not be replaced for theft or vandalism due to lack of site security being maintained. This procedure may take place only during the Landscape Maintenance Period.

1.9 MAINTENANCE SERVICE

A. General: Provide full maintenance by skilled employees of landscape Installer. Maintain as required in Part 3.

B. Continuously maintain entire project area during the progress of the work and during the ninety (90) calendar day maintenance period until final acceptance of the project by the Landscape Architect.

C. Maintenance period shall not start until Final Completion, when all elements of construction, planting and irrigation for the entire project are in accordance with Plans and Specifications. A prime requirement is that all turf grass and landscape areas shall be planted, and that all turf grass areas shall show an even, healthy stand of grass seedlings and which shall have been mown twice. If such criteria are met to the satisfaction of the Landscape Architect, a written notification shall be issued to the Owner establishing the effective beginning date of maintenance period.

D. Any day of improper maintenance, as determined by the Landscape Architect, shall not be credited as an acceptable maintenance period day. The maintenance period shall be extended on a daily basis if the work is not in accordance to the Plans and Specifications. Project shall not be segmented into maintenance areas or phases, unless authorization of the Landscape Architect is obtained.

E. Maintenance shall continue beyond the ninety (90) day maintenance period, as required, until final acceptance is given by the Landscape Architect.

F. Contractor shall provide protection to the project site during the maintenance period.

PART 2 - PRODUCTS

2.1 GENERAL

A. The following organic amendments and fertilizers are to be used for bid price basis only. Specific amendments and fertilizers specification shall be made after rough grading operations are complete and soil samples are tested by the Contractor and approved by the Landscape Architect. The amounts listed in the Preparation section are considered minimum amounts for the project unless directed otherwise by the Landscape Architect.

2.2 ORGANIC SOIL AMENDMENTS

A. Organic amendment shall be nitrogen stabilized wood residual containing 0.56 to 0.84% N based on dry weight.

B. Particle Size:
95-100% passing 6.35 mm standard sieve
80-100% passing 2.33 mm standard sieve

C. Salinity: The saturation extract conductivity shall not exceed 3.5 milliohms/centimeter at 25 degrees centigrade as determined by the saturation extract method.

D. Iron content: Minimum 0.08% dilute acid soluble Fe on dry weight basis.

E. Ash: 0-6.0% (dry weight).

F. As available from:
1. Redi-Grow Corporation
8909 Elder Creek Road
Sacramento, CA 95828
(916) 381-6063
(800) 654-4358
OR
2. Cascade Rock, Inc.
8585 Kiefer Boulevard
Sacramento, CA 95826-3990
(916) 383-1300

2.3 SOIL

A. Topsoil: Site to be rough graded to elevations shown on Civil Drawings. Top soil is required behind curb areas. Top soil is required in all planting areas to a minimum depth of 9”. Provide on-site, import, or non-processed topsoil in planting areas as needed to complete rough grading which is fertile, friable and natural. Topsoil shall be from agricultural sources, surface soil, reasonably free of subsoil, clay lumps, brush, weeds and other litter, and free of roots, stumps, stones larger than 1" in any dimension, and other extraneous or toxic matter harmful to plant growth.

B. All topsoil to be used for planting, regardless of whether import or on-site in origin, shall be tested as described in this Section.

C. Import Topsoil: ASTM D 5268 topsoil, with pH range of 5.5 to 7.5, a minimum of 4 percent organic material content. Mix topsoil with the following soil amendments in the following quantities to produce planting soil:

1. Coarse Sand:
   a. Particle Size Range: 0.5-2.0 mm
   b. Max. % weight: 15
   c. Min. % weight: 0
2. Silt Plus Clay
   a. Particle Size Range: <0.05 mm
   b. Max. % weight: 50
   c. Min. % weight: 25
3. Silt
   a. Particle Size Range: 002-0.05 mm
   b. Max. % weight: 30
   c. Min. % weight: 10
4. Clay
   a. Particle Size Range: 0-.002 mm
   b. Max. % weight: 25
   c. Min. % weight: 10
5. Gravel
   a. Particle Size Range: 2-13 mm
   b. Max. % weight: 15
   c. Min. % weight: 0
6. Rock
   a. Particle Size Range: >1/2 inch
   b. Max. % weight: 10% by volume; None > 1 inch
   c. Min. % weight: 0
7. Organic Matter
   a. Particle Size Range: n/a
   b. Max. % weight: 15
   c. Min. % weight: 0

2.4 MULCH

A. Mulch shall be walk-on shredded fir bark mulch.

B. Physical properties:

1. Percent Passing	Sieve Size
90-100	1” Dia.
80-100	½” Dia.
20-60	¼”

C. Chemistry:
1. Acid in reaction, max. pH 5.0
2. Maximum ash Chemistry: 7% based on dry weight.
3. Minimum moisture 35% at time of delivery based on fresh weight.

D. As available from:
   1. Redi-Grow Corporation
      8909 Elder Creek Road
      Sacramento, CA 95828
      OR
   2. Cascade Rock, Inc.
      8585 Kiefer Boulevard
      Sacramento, CA 95826-3990
      (916) 383-1300

2.5 PLANT MATERIAL

A. General: Furnish nursery-grown plants true to genus, species, variety, cultivar, stem form, shearing, and other features shown Drawings and complying with ANSI Z60.1 and in accordance with California State Department of Agricultural regulations for nursery inspections, rules and ratings; and with healthy root systems. Provide well-shaped, fully branched, healthy, vigorous stock, densely foliated when in leaf and free of disease, pests, eggs, larvae, and defects such as knots, sun scald, injuries, abrasions, and disfigurement.
   1. Trees with damaged, crooked, or multiple leaders; tight vertical branches where bark is squeezed between two branches or between branch and trunk ("included bark"); crossing trunks; cut-off limbs more than 3/4 inch in diameter; or with stem girdling roots will be rejected.
   2. Collected Stock: Do not use plants harvested from the wild, from native stands, from an established landscape planting, or not grown in a nursery unless otherwise indicated.
   3. Plants of a larger size may be used if acceptable to Landscape Architect, with a proportionate increase in size of roots or balls.

B. Labeling: Label at least one plant of each variety, size, and caliper with a securely attached, waterproof tag bearing legible designation of common name and full scientific name, including genus and species. Include nomenclature for hybrid, variety, or cultivar, if applicable for the plant as shown on Drawings.

C. If formal arrangements or consecutive order of plants is shown on Drawings, select stock for uniform height and spread, and number the labels to assure symmetry in planting.

D. The minimum acceptable planted height of 15 gallon trees is 6’-6”.

E. Provide single stem trees except where special forms are shown or listed.

2.6 SEED

A. Turf Grass Seed: Fresh, clean, dry, new-crop seed complying with AOSA's "Journal of Seed Technology; Rules for Testing Seeds" for purity and germination tolerances.
   1. Grass Seed Mixture: Provide seed grass species and varieties, proportions by weight, and minimum percentages of purity, germination, and maximum percentage of weed seed as indicated.

a. Materials (at 10lbs. per 1000 square feet or as directed by supplier)
As indicated on drawings or equal.
b. As available from:
Mark Seeding Services, Inc.
P.O. Box 187
Galt, California 95632
(800) 476-4937

2. Fiber Mulch: Biodegradable dyed-wood cellulose-fiber mulch, non-toxic, free of plant growth or germination inhibitors, with maximum moisture content of fifteen percent and a pH range of 4.5 to 6.5.
3. Non-asphaltic Tackifier: Colloidal tackifier recommended by fiber-mulch manufacturer for slurry application, non-toxic and free of plant growth or germination inhibitors.
4. Wood Cellulose Fiber: Weyerhauser Silva Fiber, or approved equal, at a rate of 2,000 lbs./acre.

B. Erosion Control Seed: Fresh, clean, dry, new-crop seed complying with AOSA's "Journal of Seed Technology; Rules for Testing Seeds" for purity and germination tolerances.
1. Seed Mixture: Provide seed species and varieties, proportions by weight, and minimum percentages of purity, germination, and maximum percentage of weed seed as indicated.

a. Materials: (at 20lbs./acre)
As indicated on drawings or equal.
b. As available from:
Mark Seeding Services, Inc.
P.O. Box 187
Galt, California 95632
(800) 476-4937

2. Hydromulch Fiber: Secondary Paper, application rate of 500 lbs./acre.
3. Fertilizer: 5-3-2, Applied at 500 lbs/acre.
4. Tackifier: Plantago, applied at 50 lbs/acre.

C. Applied by Strawblower
1. Wheat Straw: Applied at 4,000 lbs./acre.

D. Applied by Hydroseeder
1. Hydromulch Fiber: Secondary Paper, application rate of 500 lbs./acre.
2. Tackifier: Plantago, applied at 100 lbs/acre.

2.7 SOD

A. Furnish viable sod of uniform density, color, and texture, strongly rooted, and capable of vigorous growth and development when planted.

B. Turf Grass Sod
a. As indicated on drawings or equal.
b. Pacific Sod

2006 Loquat Avenue
Patterson,CA95363
(800) 692-8690

C. Native Grass Sod
1. Native Grass Blends:
a. Native Preservation Mix:
Nodding needle grass, Nassella cernua
Purple needle grass, Nassella pulchra
Junegrass, Koeleria macrantha
Molate red fescue, Festuca rubra

2. As available from:
a. Delta Bluegrass Company

2.8 LANDSCAPE FABRIC
1. Nonwoven Geotextile Filter Fabric: Polypropylene or polyester fabric, 3.5oz./sq. yd. minimum, composed of fibers formed into a stable network so that fibers retain their relative position. Fabric shall be inert to biological degradation and resist naturally-encountered chemicals, alkalis, and acids.

2.9 LANDSCAPE EDGINGS

A. Concrete edger: Standard gray concrete.

2.10 TREE ROOT BARRIERS

A. “Deep Root” UB-24-2

B. Or equal

2.11 TREE STABILIZATION

A. Tree stakes
1. R2 Stake System
a. As available from:
J.R. Partners
1616 Freedom Court
Turlock, CA
(209) 634-7791

OR

1. Sound new lodge pole pine 2" minimum diameter with minimum height (above ground) of 6'-0" for 5 gallon container and 8'-0" for 15 gallon container. Stakes shall have been treated with copper napthanate to a minimum wood depth of 1/16". All stakes shall be free of knots larger then 1/2" in diameter, holes and other defects.

2. Tree Straps: VIT "Cinch-tie" tree straps. Tree straps shall be attached to tree stake as shown in staking detail on the plans.

B. Palm Bracing: Battens or blocks, struts, straps, and protective padding as indicated.
1. Battens or Blocks and Struts: Rough-sawn, sound, new hardwood or softwood, free of knots, holes, cross grain, and other defects, 2-by-4-inch nominal by lengths indicated.
2. Straps: Adjustable steel or plastic package banding straps.
3. Padding: Burlap.
4. Proprietary Palm-Bracing Devices: Proprietary systems to secure each new planting by trunk; sized per manufacturer's written recommendations unless otherwise indicated.

a. Products:
1) Arborbrace; ArborBrace Palm Bracing.
2) Horticultural Consultants, Inc.; Oasis Palm Tree Anchoring System.
3) Or Equal.

2.12 DECOMPOSED GRANITE

A. Decomposed granite with stabilizer soil additive.

2.13 COBBLE/ROCK

A. Hard, durable stone, washed free of loam, sand, clay, and other foreign substances, of following type, size range, and color:
1. Type: Rounded riverbed smooth-faced stone, Mexican pebble.
2. Size Range: <4”.

2.14 SAND

A. Washed silica sand.

PART 3 - EXECUTION

3.1 PREPARATION

A. Protect structures, utilities, sidewalks, pavements, and other facilities, trees, shrubs, and plantings from damage caused by planting operations.
1. Protect adjacent and adjoining areas from hydroseeding overspray.
2. Protect grade stakes set by others until directed to remove them.

B. Install erosion-control measures to prevent erosion or displacement of soils and discharge of soil-bearing water runoff or airborne dust to adjacent properties and walkways.

C. Soil Preparation
   1. All planting areas shall have a minimum of nine inches of clean topsoil. Soil shall be cleared of all stones, stumps, debris, etc. larger than 1 inch in diameter, that are brought to the surface as a result of cultivation.
      a. Cultivation shall be by rototilling or ripping equipment.
   2. After approximate finished grades have been established, soil shall be conditioned and fertilized in the following manner:
      a. Amendments shall be uniformly spread and cultivated thoroughly by means of mechanical tiller into the top six inches of soil.
      b. The following organic soil amendments and fertilizer rates, and quantities are minimums and are to be used for bid basis only. Specific rates and quantities will be made after rough grading operations are complete and soil samples are tested by the Contractor and approved by the Landscape Architect.
      c. Application rates: (Per 1,000 square feet)
         1) Organic amendment- six cubic yards for groundcover and shrub areas; three cubic yards for lawn areas.
         2) Fertilizer- 15 lbs.
         3) Gypsum- 200 lbs.
         4) Soil sulphur- 20 lbs.
         5) Iron- 2 lbs.
         6) Calcium carbonate- 2 lbs.

D. Loosen subgrade of planting areas to a minimum depth of 9 inches. Remove stones larger than 1 inch in any dimension and sticks, roots, rubbish, and other extraneous matter and legally dispose of them offsite.

E. Finish Grading: Grade planting areas to a smooth, uniform surface plane with loose, uniformly fine texture. Roll and rake, remove ridges, and fill depressions to meet finish grades. Limit finish grading to areas that will be planted within 24 hours.

F. Parking Lot Planters:
   1. All aggregate base rock, and other non-organic materials shall be removed from all parking lot planter areas down to the level of native soil. Backfill planters to specified finish grade with native or approved topsoil, and amend as specified.

G. Final Grades:
   1. The following areas shall be graded so that the final grades shall be established below adjacent paved areas, sidewalks, valve boxes, headers, clean outs, drains, manholes, etc. as follows:
      a. Shrub/groundcover areas: 2-1/2 inches.
      b. Sod areas: 1-1/2 inches.
      c. Hydroseed areas: 1 inch
   2. Surface drainage shall be away from all building foundations, 2% minimum.
   3. Legally dispose of excess or unacceptable soil from the site at no expense to the Owner.

H. Before planting, obtain Landscape Architect's acceptance of finish grading; restore planting areas if eroded or otherwise disturbed after finish grading.

3.2 EXCAVATION FOR TREES AND SHRUBS

A. Lay out individual tree and shrub locations and areas for multiple plantings. Stake locations, outline areas, adjust locations when requested, and obtain Landscape Architect's acceptance of layout before excavating or planting. Make minor adjustments as required.

B. Planting Pits and Trenches: Excavate circular planting pits. Create a roughened edge along the inside walls of the planting pit. Trim perimeter of bottom leaving center area of bottom raised slightly to support root ball and assist in drainage away from center. Do not further disturb base. Ensure that root ball will sit on undisturbed base soil to prevent settling.
   1. Excavate approximately three times as wide as ball diameter.
   2. Do not excavate deeper than depth of the root ball, measured from the root flare to the bottom of the root ball.
   3. If area under the plant was initially dug too deep, add soil to raise it to the correct level and thoroughly tamp the added soil to prevent settling.

C. Subsoil and topsoil removed from excavations may be used as planting soil, provided they meet the requirements of planting soil noted above.

D. Obstructions: Notify Architect if unexpected rock or obstructions detrimental to trees or shrubs are encountered in excavations.

E. Drainage: Notify Architect if subsoil conditions evidence unexpected water seepage or retention in tree or shrub planting pits.

F. Fill excavations with water and allow to percolate away before positioning trees and shrubs.

3.3 PLANTING

A. Set plant plumb and in center of planting pit or trench with root flare 1-inch above adjacent finish grades shrubs, vines and groundcover; 2- inches at trees.
   1. Use planting soil for backfill.
   2. Carefully remove root ball from container without damaging root ball or plant.
   3. Backfill around root ball in layers, tamping to settle soil and eliminate voids and air pockets. When planting pit is approximately one-half filled, water thoroughly before placing remainder of backfill. Repeat watering until no more water is absorbed.
   4. Place planting tablets in each planting pit when pit is approximately one-half filled; in amounts recommended in soil reports from soil-testing laboratory. Place tablets beside the root ball about 1 inch from root tips; do not place tablets in bottom of the hole.
   5. Continue backfilling process. Water again after placing and tamping final layer of soil.

B. When planting on slopes, set the plant so the root flare on the uphill side is flush with the surrounding soil on the slope; the edge of the root ball on the downhill side will be

above the surrounding soil. Apply enough soil to cover the downhill side of the root ball.

C. After installation and before Substantial Completion, remove all nursery tags, tie tape, labels, wire, and other debris from plant material, planting areas, and project site.

3.4 TREE STABILIZATION

A. Staking
   1. Retain one of first two subparagraphs below or revise to suit Project.
   2. Stake trees of 2- through 5-inch caliper. Use stake of required length to penetrate at least 18 inches below bottom of backfilled excavation. Set stake to avoid penetrating root balls or root masses.
   3. Support trees with strap-bar OR tree straps. Allow enough slack to avoid rigid restraint of tree.

B. Palm Bracing: Install bracing system at three or more places equally spaced around perimeter of trunk to secure each palm until established unless otherwise indicated.

   1. Site-Fabricated Palm-Bracing Method:

      a. Place battens over padding and secure battens in place around trunk perimeter with at least two straps, tightened to prevent displacement. Ensure that straps do not contact trunk.
      b. Place diagonal braces and cut to length. Secure upper ends of diagonal braces with galvanized nails into battens or into nail-attached blocks on battens. Do not drive nails, screws, or other securing devices into palm trunk; do not penetrate palm trunk in any fashion. Secure lower ends of diagonal braces with stakes driven into ground to prevent outward slippage of braces.

   2. Proprietary Palm-Bracing Device: Install palm-bracing system sized and positioned as recommended by manufacturer unless otherwise indicated and according to manufacturer's written instructions.

3.5 ROOT-BARRIER INSTALLATION

A. Install root barrier where indicated on drawings.

B. Align root barrier vertically and run it continuously linearly along and adjacent to the paving or other hardscape elements.
   1. Position top of root barrier flush with finish grade.
   2. Slide panels together to connect.
   3. Do not distort or bend root barrier during construction activities.
   4. Do not install root barrier surrounding the root ball of tree.

3.6 LANDSCAPE FABRIC

A. Place fabric below cobble/rock mulch or as indicated on drawings. Overlap all seams 12" minimum and pin down every 36".

3.7 MULCHING

A. Mulch all planting areas (except turf) to depth as indicated on drawings.
   1. Do not place mulch within 3 inches of trunks or stems.

3.8 EDGING INSTALLATION

A. Concrete Edging: End of concrete edging shall meet flush and at 90º angle to abutting material, unless shown otherwise on plans. Height of edging shall not vary more than 1/2" over finish grade.

3.9 TURF AREA PREPARATION

A. Limit turf subgrade preparation to areas to be planted.

B. Newly Graded Subgrades: Loosen subgrade to a minimum depth of 6 inches. Remove stones larger than 1 inch in any dimension and sticks, roots, rubbish, and other extraneous matter and legally dispose of them off Owner's property.
   1. Spread topsoil, apply soil amendments and fertilizer on surface, and thoroughly blend planting soil.
      a. Delay mixing fertilizer with planting soil if planting will not proceed within a few days.
      b. Mix lime with dry soil before mixing fertilizer.
   2. Spread planting soil to a depth of 6 inches but not less than required to meet finish grades after light rolling and natural settlement. Do not spread if planting soil or subgrade is frozen, muddy, or excessively wet.
      a. Spread approximately 1/2 the thickness of planting soil over loosened subgrade. Mix thoroughly into top 4 inches of subgrade. Spread remainder of planting soil.
      b. Reduce elevation of planting soil to allow for soil thickness of sod (1 1/2" below finish grade).

C. Finish Grading: Grade planting areas to a smooth, uniform surface plane with loose, uniformly fine texture. Grade to within plus or minus 1/2 inch of finish elevation. Roll and rake, remove ridges, and fill depressions to meet finish grades. Limit finish grading to areas that can be planted within 24 hours.
   1. Sodded areas shall be compacted with a water filled roller. Final compaction shall range from 95% for flat areas and up to 90% for 3:1 slopes.

D. Moisten prepared area before planting if soil is dry. Water thoroughly to a depth of 4" and allow surface to dry before planting. Do not create muddy soil.

E. Before planting, obtain Landscape Architect's acceptance of finish grading; restore planting areas if eroded or otherwise disturbed after finish grading.

3.10 PREPARATION FOR EROSION-CONTROL MATERIALS

A. Prepare area as specified in "Turf Area Preparation".

3.11 TURF

A. Hydroseeding: Mix specified seed and fiber mulch in water, using equipment specifically designed for hydroseed application. Continue mixing until uniformly blended into homogeneous slurry suitable for hydraulic application. Maximum permissible time of mix of fertilizer and seed shall be 1- hour in order to prevent deterioration of seed.

1. Mix slurry with manufacturer's recommended tackifier.
2. Apply slurry uniformly to all areas to be seeded in a one-step process. Apply slurry at a rate so that mulch component is deposited at not less than 1500-lb/acre dry weight, and seed component is deposited at not less than the specified seed-sowing rate.
3. Apply slurry uniformly to all areas to be seeded in a two-step process. Apply first slurry coat at a rate so that mulch component is deposited at not less than 500-lb/acre dry weight, and seed component is deposited at not less than the specified seed-sowing rate. Apply slurry cover coat of fiber mulch (hydromulching) at a rate of 1000 lb/acre.

B. Sodding:
1. Lay sod within 24 hours of harvesting.
2. Lay sod to form a solid mass with tightly fitted joints. Butt ends and sides of sod; do not stretch or overlap. Stagger sod strips to offset joints in adjacent courses. Avoid damage to subgrade or sod during installation. Tamp and roll with 200 pound roller to ensure contact with subgrade, eliminate air pockets, and form a smooth surface.
    a. Lay sod across angle of slopes exceeding 1:3.
    b. Anchor sod on slopes exceeding 1:6 with wood pegs spaced as recommended by sod manufacturer but not less than 2 anchors per sod strip to prevent slippage.
    c. At irregular areas, sod shall be laid in the direction of the longest straight line that can be drawn through the area.
3. Saturate sod with fine water spray within two hours of planting. During first week after planting, water daily or more frequently as necessary to maintain moist soil to a minimum depth of 6 inches below sod.

C. Remove turf from around each tree to create a 3'-0" diameter.

3.12 SATISFACTORY TURF

A. Turf installations shall meet the following criteria as determined by Landscape Architect:

1. Satisfactory Seeded Turf: At end of maintenance period, a healthy, uniform, close stand of grass has been established, free of weeds and surface irregularities, with coverage exceeding 90 percent over any 10 sq. ft. and bare spots not exceeding 5 by 5 inches.
2. Satisfactory Sodded Turf: At end of maintenance period, a healthy, well-rooted, even-colored, viable turf has been established, free of weeds, open joints, bare areas, and surface irregularities.

B. Use specified materials to reestablish turf that does not comply with requirements and continue maintenance until turf is satisfactory.

3.13 MAINTENANCE

A. Maintain plantings by pruning, cultivating, watering, weeding, fertilizing, mulching, adjusting and repairing tree-stabilization devices, resetting to proper grades or vertical position, and performing other operations as required to establish healthy, viable plantings. Spray or treat as required to keep trees and shrubs free of insects and disease.

B. Thoroughly water to insure vigorous and healthy growth until work is accepted. Water in a manner to prevent erosion due to application of excessive quantities of water.

C. Fill in as necessary soil subsidence that may occur because of settling or other processes. Replace mulch materials damaged or lost in areas of subsidence.

D. Weeding
1. Keep plant basins and areas between plants free of weeds. If weeds develop, remove manually, herbicides are prohibited. Avoid frequent soil cultivation that destroys shallow roots. Weeding also shall be included in all paved areas including public or private sidewalks.

E. Pruning
1. Trees: Prune trees to select and develop permanent scaffold branches; to eliminate narrow V-shaped branch forks that lack strength; to reduce toppling and wind damage by thinning out crowns; to maintain a natural appearance and to balance crown with roots. All trees shall be maintained and pruned in accordance with the accepted practices of the International Society of Aboriculture (ISA). Prune only as directed by the Landscape Architect.

2. Shrubs: Same objectives as for trees. Shrubs shall not be clipped into balled or boxed forms unless such is required by the landscape plans. All pruning cuts shall be made to lateral branches, buds or flush with the trunk. Stubbing and heading shall not be permitted.

3. Only skilled workers shall perform pruning work in accordance with standard horticultural pruning practices. Remove from the project all pruned branches and material. Remove and replace any plant material excessively pruned or malformed resulting from improper pruning practices at no additional costs to the owner.

F. Staking: Stakes shall remain in place through the guarantee period and shall be inspected and adjusted to prevent rubbing that causes bark wounds. Remove nursery stakes from all trees just prior to end of Maintenance Period, unless otherwise noted.

G. Apply treatments as required to keep plant materials, planted areas, and soils free of pests and pathogens or disease. Use integrated past management practices whenever possible to minimize the use of pesticides and reduce hazards. Treatments include physical controls such as hosing off foliage, mechanical controls such as traps, and biological control agents.

H. Turf Maintenance

1. Mowing and Edging
   a. Hydroseed Turf Grass: Mowing of turf will commence when the grass has reached a height of two and one-half (2-1/2) inches. The height of cut will be two (2) inches. Mowing will be at least every 4-6 days for the second through fifth cuttings, and at least once per week after that. Turf must be well established and free of bare spots and weeds to the satisfaction of the Landscape Architect prior to final acceptance.
   b. Excess grass clippings shall be picked up and removed from the site and premises.
   c. Let turf areas dry out enough so that mower wheels do not skid, tear or mark the lawn.
   d. Edges shall be trimmed at 90 degrees to pavement, at least twice monthly or as needed for neat appearance. Clippings shall be removed from paved and planting areas and disposed of from the site.

2. Native Sod/Water quality swales
   a. Do not mow. String line trimmer shall be used for trimming or edge clean-up. Turf must be well established and free of bare spots and weeds to the satisfaction of the Landscape Architect prior to final acceptance.
   b. Excess clippings shall be picked up and removed from the site and premises.
   c. Edges shall be trimmed as needed for neat appearance. Do not use lawn edger. Clippings shall be removed from paved and planting areas and disposed of from the site.
   d. Fertilization: Spring or fall application of Native Sod maintenance fertilizer at manufacturer's recommended rate.

3. Watering: Lawns shall be watered at such frequency as weather conditions require to replenish soil moisture below root zone and to establish healthy strands of grass.

I. IRRIGATION SYSTEM

1. System Observation: The Contractor shall check all systems for proper operation. Lateral lines shall be flushed out after removing the last sprinkler head or two at each end of the lateral. All heads are to be adjusted as necessary for unimpeded head to head coverage.
2. Controllers: Set and program automatic controllers for seasonal water requirements. Give the Owner's Representative instructions on how to turn off system in case of emergency.
3. Repairs: Repair all damages to irrigation system at the Contractor's expense. Repairs shall be made within twenty-four (24) hours.

3.14 CLEANUP AND PROTECTION

A. Promptly remove soil and debris from paved and vertical surfaces. Clean wheels of vehicles before leaving site to avoid tracking soil onto roads, walks, or other paved areas.

B. Erect temporary fencing, barricades and/or warning signs as required protecting newly planted areas from traffic. Maintain fencing and barricades throughout initial maintenance period and remove after plantings are established. Treat, repair, or replace damaged plantings.

C. Remove non-degradable erosion-control measures after grass establishment period.

D. During planting, keep adjacent paving and construction clean and work area in an orderly condition.

E. Trash: Remove trash weekly in all planted areas, pedestrian walkways and parking areas.

3.15 FINAL ACCEPTANCE

A. Work under this section will be accepted by the Landscape Architect upon satisfactory completion of all work (including maintenance). Upon final acceptance, and written notification, the Owner will assume responsibility for maintenance of the work.

END OF SECTION

SECTION 32 91 14

BIORETENTION SOIL

PART 1 - GENERAL

1.01 SECTION INCLUDES

A. Specifications for furnishing, placing, and compacting bioretention soils as indicated.

B. Related Sections:

1. Division 31 – Earthwork
2. Section 32 80 00 – Irrigation
3. Section 32 91 13 – Soil Preparation and Finish Grading
4. Section 32 92 00 – Lawns and Grasses
5. Section 32 93 00 – Trees, Shrubs, Ornamental Grasses and Ground Covers
6. Section 32 94 00 – Planting Accessories
7. Section 32 97 00 – Landscape Maintenance
8. Section 33 40 50 – Landscape Drainage

1.02 REFERENCES

A. American Society for Testing and Materials (ASTM):
ASTM D422 – Standard Test Method for Particle-Size Analysis of Soils
ASTM D1557 – Standard Test Method for Laboratory Compaction Characteristics of Soil Using Modified Effort
ASTM D2434 – Standard Test Method for Permeability of Granular Soils (Constant Head)
ASTM D5268 – Standard Specification for Topsoil Used for Landscaping Purposes

1.03 GENERAL REQUIREMENTS

A. Bioretention soil shall achieve a long-term, in-place infiltration rate of at least 5 inches per hour. Bioretention soil shall also support vigorous plant growth.

Bioretention Soil shall be a mixture of topsoil or fine sand, and compost, measured on a volume basis.

Mix A – Topsoil Blend
10%-20% Topsoil
50%-60% Fine Sand
30%-40% Compost

Mix B – Fine Sand Blend
60%-70% Fine Sand
30%-40% Compost

1.04 SUBMITTALS

The contractor must submit to the University for approval:

A. A sample of mixed bioretention soil.

B. Certification from the soil supplier or an accredited laboratory that the Bioretention Soil meets the requirements of this guideline specification.

C. Grain size analysis results of the fine sand component performed in accordance with ASTM D 422, Standard Test Method for Particle Size Analysis of Soils.

D. Quality analysis results for compost performed in accordance with Seal of Testing Assurance (STA) standards, as specified in Section 1.4.

E. Organic content test results of mixed Bioretention Soil. Organic content test shall be performed in accordance with by Testing Methods for the Examination of Compost and Composting (TMECC) 05.07A, “Loss-On-Ignition Organic Matter Method”.

F. A description of the equipment and methods used to mix the sand and compost to produce Bioretention Soil.

G. Provide the following information about the testing laboratory(ies) name of laboratory(ies) including:

1. Contact person(s)
2. Address(es)
3. Phone contact(s)
4. E-mail address(es)
5. Qualifications of laboratory(ies), and personnel including date of current certification by STA, ASTM, or approved equal

PART 2 - PRODUCTS

2.01 SAND FOR BIORETENTION SOIL

A. General.

1. Sand shall be free of wood, waste, coating such as clay, stone dust, carbonate, etc., or any other deleterious material. All aggregate passing the No. 200 sieve size shall be non-plastic.

B. Sand for Bioretention Soil Texture.

1. Sand for Bioretention Soils shall be analyzed by an accredited lab using #200, #100, #40, #30, #16, #8, #4, and 3/8 inch sieves (ASTM D 422 or as approved by University), and meet the following gradation:

Sieve Size	Percentage Passing (by weight)	
	Min	*Max*

3/8 Inch	100		100	
No. 4		90		100
No. 8		70		100
No. 16		40		95
No. 30		15		70
No. 40		5		55
No. 100	0		15	
No. 200	0		5	

Note all sands complying with ASTM C33 for fine aggregate comply with the above gradation requirements.

2.02 TOPSOIL FOR BIORETENTION SOIL

A. General

Topsoil shall be free of wood, waste, or any other deleterious material.

B. Topsoil for Bioretention Soil Texture

The overall topsoil texture shall be loamy sand as analyzed by an accredited laboratory. The overall dry weight percentages shall be 60-90% sand, with less than 20% passing than the #200 sieve and less than 5% clay of the total weight with no gravel.

2.03 COMPOSTED MATERIAL

Compost shall be a well decomposed, stable, weed free organic matter source meeting the standards developed by the US Composting Council (USCC). The product shall be certified through the USCC Seal of Testing Assurance (STA) Program (a compost testing and information disclosure program).

A. Compost Quality Analysis Before delivery of the soil, the Contractor shall submit a copy of lab analysis performed by a laboratory that is enrolled in the US Composting Council's Compost Analysis Proficiency (CAP) program and using approved Test Methods for the Evaluation of Composting and Compost (TMECC). The lab report shall verify:

1. Feedstock Materials shall be specified and include one or more of the following: landscape/yard trimmings, grass clippings, food scraps, and agricultural crop residues.

2. Organic Matter Content: 35% - 75% by dry wt.

3. Carbon and Nitrogen Ratio: C:N < 25:1.

4. Maturity/Stability: shall have a dark brown color and a soil-like odor. Compost exhibiting a sour or putrid smell, containing recognizable grass or leaves, or is hot (120F) upon delivery or rewetting is not acceptable. In addition, any one of the following is required to indicate stability:

   a. Oxygen Test < 1.3 O2 /unit TS /hr
   b. Specific oxy. Test < 1.5 O2 / unit BVS
   c. Respiration test < 8 C / unit VS / day
   d. Dewar test < 20 Temp. rise (°C)
   e. Solvita® > 5 Index value

5. Toxicity: any one of the following measures is sufficient to indicate non-toxicity.

    a. NH4- : NO3-N < 3
    b. Ammonium < 500 ppm, dry basis
    c. Seed Germination > 80 % of control
    d. Plant Trials > 80% of control
    e. Solvita® > 5 Index value

6. Nutrient Content: provide analysis detailing nutrient content including N-P-K, Ca, Na, Mg, S, and B.

    a. Total Nitrogen content 0.9% or above preferred.
    b. Boron: Total shall be <80 ppm; Soluble shall be <2.5 ppm

7. Salinity: Must be reported; < 6.0 mmhos/cm

8. pH shall be between 6.5 and 8. May vary with plant species.

B. Particle size: 95% passing a 1/2” screen

C. Bulk density: shall be between 500 and 1100 dry lbs/cubic yard

D. Moisture Content shall be between 30% - 55% of dry solids

E. Inerts: compost shall be relatively free of inert ingredients, including glass, plastic and paper, < 1 % by weight or volume

F. Weed seed/pathogen destruction: provide proof of process to further reduce pathogens (PFRP). For example, turned windrows must reach min. 55C for 15 days with at least 5 turnings during that period.

G. Select Pathogens: Salmonella <3 MPN/4grams of TS, or Coliform Bacteria <10000 MPN/gram

H. Trace Contaminants Metals (Lead, Mercury, Etc.) Product must meet US EPA, 40 CFR 503 regulations

I. Compost Testing. The Contractor will test all compost products within 120 calendar days prior to application. Samples will be taken using the STA sample collection protocol. (The sample collection protocol can be obtained from the U.S. Composting Council, 4250 Veterans Memorial Highway, Suite 275, Holbrook, NY 11741 Phone: 631-737-4931, www.compostingcouncil.org). The sample shall be sent to an independent STA Program approved lab. The Contractor will pay for the test.

PART 3 - EXECUTION

3.01 PLACEMENT AND COMPACTION OF BIORETENTION SOILS

Place the bioretention soil in 8" to 12" lifts. Lifts are not to be compacted but are placed to reduce the possibility of excessive settlement. Allow time for natural compaction and settlement prior to planting. Bioretention soil may be watered to encourage compaction.

END OF SECTION

SECTION 33 11 16

SITE WATER DISTRIBUTION SYSTEM

PART 1 - GENERAL

1.01 SECTION INCLUDES

A. Specifications for providing water service and distribution and modification to existing water mains and services as indicated. The extent of water distribution is indicated on the Contract Drawings and includes furnishing, installing, testing, and disinfecting permanent water supply piping and services as indicated.

B. Provide fire hydrants and services as indicated.

C. The jurisdictional water utility district shall provide water services to the water meters' points of connection for station facilities and landscape irrigation systems, and modifications to their existing water mains, as indicated on the Contract Drawings. The Contractor shall be responsible for making all such arrangements. All work on the jurisdictional agency's facilities shall be in accordance with the agency's adopted standards and performed by the agency or their representative.

D. Domestic and Fire service facilities and their appurtenances are not to be sized and/or installed until that time the domestic and fire system requirements have been confirmed by the building designers and reviewed and approved by the jurisdictional Water Utility District.

1.02 RELATED SECTIONS

A. Section 31 23 00 - Trenching and Backfilling for Utilities

B. Section 32 80 00 - Irrigation

1.03 REFERENCES

A. American Society for Testing and Materials (ASTM)

ASTM A36/ A36M	Specifications for Carbon Structural Steel
ASTM A126	Specification for Gray Iron Castings for Valves, Flanges, and Pipe Fittings
ASTM A123	Specifications for Zinc Coated (Hot Dip Galvanized) Coatings on Iron and Steel Products
ASTM A197	Specifications for Cupola Malleable Iron
ASTM A307	Specification for Carbon Steel Bolts and Studs, 60,000 psi Tensile Strength
ASTM C33	Specifications for Concrete Aggregates

ASTM D1784	Specification for Rigid Poly (Vinyl Chloride) (PVC) Compounds and Chlorinated Poly (Vinyl Chloride) (CPVC) Compounds
ASTM D1785	Specification for Poly (Vinyl Chloride) (PVC) Plastic Pipe Schedules 40, 80, and 120
ASTM D2564	Specification for Solvent Cements for Poly (Vinyl Chloride) (PVC) Plastic Piping System
ASTM D3139	Specification for Joints for Plastic Pressure Pipes Using Flexible Elastomeric Seals
ASTM F439	Specification for Socket-Type Chlorinated Poly (Vinyl Chloride) (CPVC) Plastic Pipe Fittings, Schedule 80

B. American Water Works Association (AWWA)

AWWA C104	Cement-Mortar Lining for Ductile-Iron Pipe and Fittings for Water
AWWA C105	Polyethylene Encasement for Ductile-Iron Pipe Systems
AWWA C110	Ductile-Iron and Gray-Iron Fittings, three inches through 48 inches (75mm Through 1200mm), for Water and Other Liquids
AWWA C111	Rubber-Gasket Joints for Ductile-Iron Pressure Pipe and Fittings
AWWA C151	Ductile-Iron Pipe, Centrifugally Cast, for Water or Other Liquids
AWWA C503	Wet-Barrel Fire Hydrants
AWWA C651	Disinfecting Water Mains
AWWA C900	Polyvinyl Chloride (PVC) Pressure Pipe, four inches-12 inches
AWWA C905	Polyvinyl Chloride (PVC) Pressure Pipe, 14 inches-48 inches

C. Manufacturer's Standardization Society of the Valve and Fittings Industry, Inc. (MSS)

MSS SP-80 Bronze Gate, Globe, Angle and Check Valves

D. Water Utility District Standards

The jurisdictional water utility district's standard drawings and specifications.

1. Marin Municipal Water District

2. North Marin Water District

1.04 SUBMITTALS

A. Shop Drawings, Product Data, and Samples

B. Manufacturer's product data for manufactured materials and equipment, including all valves and fire hydrants.

C. Shop drawings showing piping layout and pipe, valves, hydrants, and locations of tie-ins, buttresses, and thrust blocks.

D. Manufacturer's product data for manufactured materials and equipment, including all valves and fire hydrants.

1.05 SITE CONDITIONS

A. Excavations in which products will be buried shall be dry.

B. Coordinate the installation of water supply system with the jurisdictional water utility owner.

PART 2 - PRODUCTS

2.01 BURIED PIPE AND FITTINGS

A. Requirements

Provide the types, sizes, and configurations of pipe, fittings, and miscellaneous materials and installation accessories as indicated.

B. PVC Pipe and Fittings, Three Inches and Smaller

1. Pipe: Polyvinyl chloride (PVC), ASTM D1785, Schedule 80, Type 1, Grade 1.

2. Fittings: ASTM D1784, socket weld, same material and schedule as pipe, or meeting requirements of ASTM F439, as applicable.

3. Joints: Socket welded with PVC solvent cement conforming to ASTM D564.

C. PVC Pipe and Fittings, Four Inches and Larger

1. Pipe: AWWA C900, SDR 18, Class 235 (AWWA C905, Class 235 for 14" and Larger) polyvinyl chloride (PVC) water pipe with bell and spigot ends and flexible ring joints.

2. Fittings: ASTM D1784, Type 1, Grade 1, polyvinyl chloride (PVC) fittings, Class 305, or meeting requirements or ASTM F439, as applicable.

3. Joints: ASTM D3139, gasketed bell joints with ASTM F477 gaskets.

D. Ductile Iron Pipe (DIP)

1. Piping: AWWA C151, thickness Class 50.

2. Fittings: AWWA C110.

3. Joints: Field Lok gaskets as manufactured by US Pipe, or equal, with copper jumper to provide electrical continuity. Mechanical, where indicated, in accordance with AWWA C111, with copper jumper to provide electrical continuity.

4. Polyethylene encasement for protection of pipes, valves, and fittings shall be furnished and installed in accordance with AWWA C105.

5. Provide inside pipe and fittings with 1/16 inch thick cement-mortar lining and an asphaltic seal coat in accordance with AWWA C104.

2.02 VALVES

A. Gate Valves

150 pound bronze, non-rising stem, wedge disc, threaded connection, conforming with MSS SP-80. (AWWA C509 and AWWA C550)

B. Pressure Reducing Valves

All bronze construction, spring-loaded, single-seated, suitable for tight shutoff under dead-end conditions. Provide with renewable composition seat discs, nylon inserted diaphragm, bolted spring chamber, and threaded connection. (AWWA C512)

C. Backflow Preventer

Provide device which is approved by the jurisdictional water utility company. As a minimum, backflow preventer shall be a reduced pressure principle assembly with two rising stem gate shut-off valves, two resilient seat ball-valve test cocks, and two replaceable resilient seat check valves. Backflow preventer shall be suitable for 175 psig operating pressure and 140 degrees F operating temperature and shall be of bronze construction with screwed inlet and outlet for three inch and smaller sizes and cast iron, epoxy coated construction with 150 pound flanged inlet and outlet for four inch and larger sizes. (AWWA C510 and C511)

2.03 FIRE HYDRANTS

A. Provide fire hydrants and related appurtenances as indicated. Fire hydrants shall comply with jurisdictional water utility district, as applicable.

B. Fire hydrants shall meet requirements of AWWA C503, as applicable, and shall be provided with a minimum of two discharge nozzles and additional pumper connection, meeting the nozzle sizes and pumper requirements of the jurisdictional fire department.

2.04 CONCRETE FOR THRUST BLOCKS

A. Provide Class 3000, 3/4 inch aggregate, concrete for all thrust blocks, with reinforcement where indicated or required.

2.05 MISCELLANEOUS METAL

A. Tie Rods

Stainless Steel, Type 316, threaded ANSI standard bolt thread both ends, diameter as required.

B. Rod Couplings

Malleable iron, ASTM A197, turnbuckle design, female threaded to mate with tie rods, 5/8 inch sizes to mate with both rods and mechanical joint bolts.

C. Pipe Clamps

For sizes 4 inches and larger, provide with malleable iron rod sockets. Provide washers in lieu of rod sockets where authorized conforming with ASTM A126, Class A, cast iron. Bolts and bolting shall conform with ASTM A307.

D. Exposed Metal

All exposed metal (bends, bolts, glands, rings) shall be wrapped with six inch pipe wrap (tape coat HD 30).

E. Bolt and Nuts

All bolt and nuts shall be Stainless Steel, Type 316, unless noted otherwise.

PART 3 - EXECUTION

3.01 MAINTAINING WATER SERVICES

A. Maintain water service and conduct operations at times selected to minimize duration and inconvenience of service interruption.

B. Water valves in service owned by the jurisdictional water utility Owner shall be operated only by personnel of that jurisdictional water utility district.

C. Except as specified otherwise herein, and where applicable, materials and construction methods shall be in accordance with the provisions of the jurisdictional water utility district standard drawings and specifications.

3.02 INSTALLATION

A. Installation Requirements

1. Excavating and backfilling, including bedding and compacting requirements, shall conform to Section 31 23 33 - Trenching and Backfilling.

2. Provide concrete thrust blocks for elbows, tees, valves, and appurtenances of buried piping. Thrust blocks shall be constructed as indicated.

3. Install piping true to line and grade, supported and guided to assure alignment under all conditions.

4. Install unions at each connection to valves.

5. Make change in line with fittings. Do not spring joints to effect change of direction.

6. Do not field cut pipe unless necessary. Make such necessary cuts by means of equipment designed for the purpose, ensuring a smooth square end.

7. For connection to existing pipe, provide pipe with suitable ends or adapters, after verification of size and type of existing pipe.

B. Valves

1. Install valves in accordance with the valve manufacturer’s installation instructions.

2. Where valves are provided by the jurisdictional water utility Owner, provide suitable access for operation of valves.

3. If directed by Owner, alter typical valve manhole to suit actual conditions. Any alterations in valve manholes shall be operable from the street level. All operator nuts shall be plumb to the valve manholes.

C. Fire Hydrants (Private)

1. Provide fire hydrant installations as indicated. Installation shall conform with requirements of the jurisdictional fire department.

2. Provide necessary appurtenances and accessories as required to complete the installation.

D. Thrust Blocks and Harnessing

1. Provide for counteracting thrust caused by static and dynamic forces, including water hammer at bends, tees, reducers, valves, and dead-ends by installing harnessing as indicated or required. For other methods, submit details for approval of the Owner prior to use.

2. Provide concrete thrust blocks as indicated where harnessing is not practicable.

E. Water Service Connectors

Make water service connections, as indicated, in accordance with California Plumbing Code and the installation instructions of the service pipe and fittings manufacturer.

F. Acceptance Requirements

After installation of pipes, ends of pipes shall be either capped or plugged. No piping shall be buried before being inspected and tested.

3.03 TESTS

A. Protection from Flooding

Provide positive measures to protect exposed, installed pipe and compacted pipe bedding from flooding during testing.

B. Notice of Testing

1. Give two days notice of intention of testing to the Owner. The Contractor will furnish, install, and operate pumps, gages, meters, and individual pipe connections to test openings.

2. Designate largest sections feasible for testing and sterilizing.

C. Testing Requirements

1. Prior to backfilling, isolate system by use of approved valves, caps and plugs, or other means.

2. Maintain such isolation throughout the performance of leakage and pressure testing.

3. Where valves are used for isolation, eliminate leakage through such valves if it occurs. Maintain new work isolated from existing water mains, except for test connections, until testing and sterilization have been completed.

4. For hydrostatic tests, provide approved caps and plugs in sections to be tested and remove them after testing.

5. Prevent leakage in pipes and fittings at openings. Temporarily block plugged and capped ends to prevent displacement.

6. Install water source connection for testing and isolated section.

7. Provide labor and materials required for leakage testing, including excavation for installation and removal of pumps, gages, meters, and water source connections.

8. Where leakage exceeds the Owner's standards, perform necessary corrective measures.

9. Remove and replace defective pipes, joints, fittings, valves and appurtenances. Reset such items if displaced.

D. Hydrostatic Tests

1. Perform hydrostatic tests in accordance with the Owner's requirements. All such tests shall be witnessed by the representative. The Contractor shall be responsible for making all such arrangements.

2. Test the potable water system hydrostatically in sections to a pressure of at least 225 psi for not less than 15 minutes. Pressure test pipe before backfilling. Repair leaks and retest the system until the system is leak free. Use instruments calibrated by a quality laboratory. Test sequence shall be as follows:

a. Lines shall be fully flushed.

b. Lines shall be hydrostatically tested.

c. Lines shall be fully flushed.

d. Lines shall be fully disinfected.

3.04 SYSTEM DISINFECTION

A. Before final acceptance of the water supply system, each section of the new line shall be disinfected in accordance with AWWA C651. One of the following sources of disinfection shall be used:

1. Mixture of water and chlorine gas

2. Direct application of chlorine

3. Mixture of water and calcium hypochlorite or

4. Mixture of water and calcium chloride

B. Before disinfecting, flush the line thoroughly to remove dirt and extraneous material. Clean each section of the line between valves independently.

C. Retain the disinfectant solution in the pipe for at least 24 hours. Following this sterilization period, the residual chlorine content at the ends of the section and at other representative points shall be not less than five parts per million. Then, the line shall be drained and thoroughly flushed with water until the residual chlorine content is similar to that obtained from the existing water distribution system.

D. Take water samples and test in accordance with AWWA C651.

3.05 CONNECTIONS TO EXISTING MAINS

A. Following testing and sterilization, new water distribution lines shall be connected to existing mains as indicated. Each connection shall be made at a time and in a manner which will result in the least interruption of service.

B. All connections involving shut down of jurisdictional water utility's existing facilities shall be made under the immediate supervision of the jurisdictional water utility district. No member of the Contractor's forces may operate any valve controlling the flow of water in the water utility's existing system.

C. The Contractor shall make tie-ins to the existing system at a time which is convenient to jurisdictional water utility district, which may be in the evenings and on weekends.

D. All piping to be abandoned, as shown on the plans, is abandoned only when the pipe has been taken out of service, physically disconnected from the active water system, and has been sealed by the Contractor.

E. The Contractor shall seal all cut ends of the existing piping that are not connected to the new system by either installing temporary fittings on the existing pipe or by plugging the cut end with concrete extending two pipe diameters into the pipe. After the concrete placement, the pipe end shall be blocked with a two-inch thick redwood block.

END OF SECTION

SECTION 33 30 00

SITE SANITARY SEWERAGE SYSTEM

PART 1 - GENERAL

1.01 SECTION INCLUDES

A. Specifications for furnishing, installing, testing the site sanitary sewerage system in the ground and to a point outside the building wall as indicated.

1.02 RELATED SECTIONS

A. Section 31 23 33 - Trenching and Backfilling

1.03 REFERENCES

A. American Society for Testing and Materials (ASTM)

ASTM D1784	Specification for Rigid Poly (Vinyl Chloride) (PVC) Compounds and Chlorinated Poly (Vinyl Chloride) (CPVC) Compounds
ASTM D1785	Specification for Poly (Vinyl Chloride) (PVC) Plastic Pipe Schedules 40, 80, and 120
ASTM D2564	Specification for Solvent Cements for Poly (Vinyl Chloride) (PVC) Plastic Piping System
ASTM D3139	Specification for Joints for Plastic Pressure Pipes Using Flexible Elastomeric Seals
ASTM F477	Specification for Elastomeric Seals (Gaskets) for Joining Plastic Pipe

B. American Water Works Association (AWWA)

AWWA C900	Polyvinyl Chloride (PVC) Pressure Pipe, four inch through 12 inch for Water Distribution

C. Sanitary Utility District Standards

Note that all work shall be performed and completed in accordance with the jurisdictional sanitary utility district's standard drawings and specifications. The Contractor shall be responsible for obtaining all such standards as applicable.

1.04 SUBMITTALS

A. Shop Drawings showing piping layouts, sizes, types, and cleanouts.

B. Respective manufacturer's product data for manufactured materials and equipment.

C. Equipment manufacturer's printed operating and maintenance instructions consisting of detailed parts list, recommended spare parts list, and complete operation and maintenance procedures.

D. Certified test reports of equipment, as applicable.

1.05 SITE CONDITIONS

A. Excavations shall be dry immediately before and after products are installed. Provide surfaces and structures to, and on, which sewerage products will be installed.

B. Coordinate the installation of the sewerage system with the jurisdictional sanitary district or utility District.

PART 2 - PRODUCTS

2.01 BURIED PIPE AND FITTINGS

A. Requirements

Provide the types, sizes, and configurations of pipe, fittings, and miscellaneous materials and installation accessories as indicated and required.

B. PVC Pipe and Fittings, Three Inches and Smaller

1. Pipe: Polyvinyl chloride (PVC), ASTM D1785, Schedule 80, Type 1, Grade 1.

2. Fittings: ASTM D1784, socket weld, same material and schedule as pipe.

3. Joints: Socket welded with PVC solvent cement conforming to ASTM D564.

C. PVC Pipe and Fittings, Four Inches and Larger

Pipe: ASTM D3034 (SDR 26), polyvinyl chloride (PVC) water pipe with bell and spigot ends and flexible ring joints.

2.02 CLEANOUTS

A. At grade, cleanouts shall have adjustable sleeve-type housing, threaded brass plug with countersunk slot, and cast iron frame and cover.

PART 3 - EXECUTION

3.01 PREPARATION

A. Excavations shall be free of water and extraneous material immediately before sanitary sewerage products are installed or placed. Bottoms of trenches shall have a six inch sand bed and shall be formed to support the bottom quadrant of the pipe and fittings. Should rock be encountered or should bedding material be unsuitable to support the products at design elevation, continue excavation to an elevation eight inches below the design elevation and backfill with clean sand.

B. Interior of pipe, pipe fittings, valves, drains, and cleanouts shall be cleaned of foreign substances before installation.

3.02 INSTALLATION

A. Install products where indicated. Remove and reinstall products that are disturbed after installation. Ends of products to which future connections will be made shall be either valved, plugged, or capped, and anchored.

B. Connections to existing facilities shall be made with fittings and short bends to suit the actual conditions; connect products in accordance with the product manufacture's installation instructions.

C. Pipe and fittings shall be set to line and grade as shown on the Construction Drawings.

3.03 INSTALLING PIPE

A. Protect pipe and fittings during handling to prevent damage.

B. Place, shape, and compact bedding material to receive barrel of pipe.

C. Start laying pipe at lowest point; lay true to line and grade indicated.

D. Install pipe to bear on bedding material along entire length.

E. Do not place the pipe on blocking material of any type.

F. Do not use wedges while installing the pipe.

G. Install pipe so that bells and grooves are on upstream end.

H. Align each section of pipe with adjoining section with uniform annular space between bell and spigot and so as to prevent sudden offsets in flow line.

I. As each section of pipe is laid, place sufficient bedding and backfill to hold it firmly in place.

J. Apply lubricant to rubber gasket (o-rings) immediately before joining pipe sections.

K. Keep interior of sewer clean as work progresses. Where small pipe sizes make cleaning difficult, keep suitable swab or drag in pipe and pull through each joint immediately after joining is completed.

L. Keep trenches and excavations free of water during construction and until backfilled.

M. When work is not in progress, securely plug ends of pipe and fittings to prevent extraneous matter from entering pipes and fittings.

N. Cut pipe ends which project into a sewer structure flush with the inside face of the structure and cover exposed pipe reinforcement with grout.

O. Where length of stub is not shown, install four foot length and seal free end with brick masonry bulkhead or approved stopper.

P. Obtain Engineer's approval before covering pipe.

Q. Where indicated, place additional bedding material around and over the pipe in lifts not exceeding six inches loose. Compact each lift before placement of next lift.

R. Accomplish compaction by methods which will avoid damage to pipe and which will not disturb its alignment and grade. The use of vibratory rollers is prohibited until compacted cover over pipe has reached three feet or half diameter, whichever is greater.

S. Connect sanitary sewerage system to existing public sanitary sewers in accordance with requirements of the jurisdictional authority.

3.04 PIPE CLEANOUTS

A. Cleanouts shall be the same size as the pipe up to and including four inches, and shall be four inches minimum for pipe sizes six inches and larger. Cleanouts for drainage pipe shall consist of a longsweep 1/4 bend or one or two 1/8 bends extended to the place indicated. Wall or accessible piping cleanouts shall be T-pattern, 90 degree branch drainage fittings having screw plugs. Cleanouts shall be provided at the base of each riser and shall consist of a wye pattern fitting with a screw plug.

3.03 TESTS

A. Testing Requirements

1. Conduct a mandrel test to ensure that the line is free of obstructions subsequent to the placing of intermediate backfill material over the line.
2. Upon completion of the test and determination that the line is free of obstructions, plug, cap or otherwise close the open end or ends of the installed piping to prevent the entrance of debris into the lines.
3. Supply all tools, equipment, and water necessary to make all tests.
4. Flush all sewer lines prior to testing and accumulated materials shall be removed at each manhole and no materials shall be allowed to enter the existing sewer system.
5. The Contractor shall be responsible for making all necessary arrangements with the jurisdictional sanitary utility District for performing and witnessing the required tests.

B. Sanitary Sewer Pipeline Tests

1. Perform air test on all installed sanitary sewer pipes upon completion of backfill.
2. Perform vacuum test on all manholes.
3. Hydrostatically test all installed sanitary sewer force mains.
4. Test all sewers 24" or less in diameter with low pressure.
5. Sewers with a diameter greater than 24 inches may be tested by visual inspection.

C. Low Pressure Air Test (Gravity Pipe)

1. Clean set sections of pipe to be tested before starting air test.

2. Plug pipe outlets with pneumatic plugs capable of resisting internal testing pressures without requiring external bracing.

3. Immediately following pipe cleaning and wetting, slowly supply air to plugged pipe until internal air pressure reaches 5 psi. Allow at least two minutes for temperature to stabilize before proceeding, except slowly add air to maintain a minimum of 4.5 psig but less than 5 psig pressure. While temperature is stabilizing, spray plugs, pipes, and hoses with soap solution and eliminate air leaks.

4. After temperature has stabilized, measure time required (10 minute min.) for pressure to drop of 1 psig so that the pressure at the end of the test is at least 3.5 psig. If measured time exceeds allowable time, pipe will not be accepted.

5. Time, in seconds, for pressure to drop from 4.5 to 3.5 psig shall be not less than the following; time for intermediate lengths shall be interpolated:

Length	Pipe Diameter, Inches						
Pipe (Ft)	8	10	12	15	18	21	24
25	18	28	40	62	89	121	158
50	35	55	79	126	178	243	317
75	53	83	119	186	267	364	475
100	70	110	158	248	356	485	634
125	83	138	198	309	444	595	680
150	110	165	238	375	510	595	680
175	123	193	277	425	510	595	680
200	141	220	317	425	510	595	680
225	158	248	340	425	510	595	680
250	176	275	340	425	510	595	680
275	194	283	340	425	510	595	680
300	211	283	340	425	510	595	680
350	227	283	340	425	510	595	680
400	227	283	340	425	510	595	680

D. Vacuum Test (Manholes)

1. Clean set manholes to be tested before starting vacuum test.

2. Plug manhole outlets with pneumatic plugs capable of resisting internal testing pressures without requiring external bracing.

3. Vacuum test head shall be positioned at the top of the casing including grade rings.

4. Test shall be 10 lbs for 60 seconds. Measure time required for pressure to drop to 9 lbs. If measured time exceeds allowable time, manhole will not be accepted.

5. Manholes showing greater than the allowable leakage shall be repaired and retested until a satisfactory leakage result is obtained.

6. Time, in seconds, for pressure to drop from 10 lbs to 9 lbs shall be not less than the following; time for intermediate lengths shall be interpolated:

Depth	Diameter		
	48”	54”	60”
<10’	20	23	26
10’	25	29	33
12’	30	35	39
14’	35	41	46

D. Hydrostatic Tests (Force Mains)

1. Force main testing shall be done after intermediate backfill has been placed and compacted but before final paving has been placed.

2. Repair any leaks which may develop resulting from or caused by the tests.

3. Fill lines with water and increase pressure to a 120% of the Total Dynamic Head of the system or fifty (50) psi whichever is greater.

4. Test shall be applied for not less than two (2) hours with zero leakage.

5. Use of air to test force mains is not permitted.

E. Visual Test Method

1. Slowly pull a television camera through sewer and inspect for visual leaks and cracks in pipe. Repair leaks, then re-inspect pipe. Submit tape of entire length of system to District for approval.

F. Joint Pressure Testing

1. Insert sealing packer with joint testing capability, into sewer line.

2. Place sealing packer around joint and pressure test joint. If a drop in air pressure occurs reseal the joint.

3. Repeat procedure for each joint.

G. Criteria for Acceptance

1. The section of sewer being tested will not be accepted if test results exceed allowable leakage to take less time than minimum holding time. If pipe proves to be unacceptable, immediately repair defective materials and workmanship. The Contractor will not be permitted to change to another test if original test method reveals system has failed.

END OF SECTION

SECTION 33 40 00

SITE DRAINAGE SYSTEM

PART 1 - GENERAL

1.01 SECTION INCLUDES

A. Specifications for site and subdrainage and area runoff collection system and connection to existing storm drainage system as indicated.

1.02 RELATED SECTIONS

A. Section 31 23 33 - Trenching and Backfilling

B. Section 33 05 00 - Utility Structures

1.03 REFERENCES

A. American Society of State Highway and Transportation Officials (AASHTO)

AASHTO M252M	Specification for Corrugated Polyethylene Pipe
AASHTO M294M	Specification for Corrugated Polyethylene Pipe, 300 1200 mm

B. American Society for Testing and Materials (ASTM)

ASTM F667	Standard Specification for Large Diameter Corrugated Polyethylene Pipe and Fittings
ASTM F405	Standard Specification for Corrugated Polyethylene Pipe and Fittings
ASTM C76	Specification for Reinforced Concrete Culvert, Storm Drain, and Sewer Pipe

C. Marin County Uniform Construction Standards - May 2008

D. Caltrans Standard Specifications - Latest Edition

1.04 SUBMITTALS

A. Shop Drawings

Detailed drawings that indicate site drainage in plan and section, including relationship to other systems, interfaces, and drainage structures, connections, alignment, grade, bedding and backfill, and other pertinent data.

B. Product Data

Submit manufacturer's product data for pipe and pipe connection materials.

PART 2 - PRODUCTS

2.01 MATERIALS

A. Pipe Connection Requirements

Ends of pipe shall be bell and spigot, except PVC Perp., to assure continuous alignment of pipe and leakproof joints.

B. Concrete Pipe (RCP)

Reinforced Pipe: ASTM C76, Class III; for pipe 15 inches in diameter and larger. "O" ring rubber gasket (ASTM C443)

C. High Density Polyethylene Pipe (HDPE)

Pipe: HDPE pipe conforming to ASTM D3212, or ASTM 1417 for pipe sizes 8 inch - 60 inch (ADS N-12 1B WT pipe or equivalent)

D. PVC Pipe (PVC)

Pipe: PVC Pipe shall conform to ASTM D-3034, SDR 26, Bell and Spigot rubber joints for pipe sizes 4" through 8".

E PVC Perforated Pipe (PVC Perp)

Pipe: PVC Perforated Pipe shall conform to ASTM D-3034, SDR 26, solvent weld joints for pipe sizes 4", 6" and 8". Perforations shall be 2 rows of ½" holes on 5" centers, 120° apart.

PART 3 - EXECUTION

3.01 INSTALLATION OF PIPE

A. Laying Pipe

1. Lay pipe to line and grade indicated. Bell and spigot type, lay bells in cross-cuts cut in trench. Lay pipe with the bell or grooved end uphill.

2. Prevent dirt from getting into pipe joints.

3. Remove pipe which is cracked, checked, spalled, or damaged from the work.

4. Clean interior of pipe of cement, dirt, and extraneous matte as the work progresses.

B. Pipe Joints

1. Pipe joints shall be made secure and watertight.

2. Employ appropriate equipment to draw the sections of the pipe tightly together.

C. Visual Test Method

1. Slowly pull a television camera through storm drain and inspect for visual leaks, separated joints and cracks in pipe and manholes. Repair leaks and joints. Replace cracked pipe. Re-inspect pipe. Submit tape of entire length of system to District for approval.

D. Backfilling

1. Piping shall not be covered with backfill material, until inspected, and approved by the Engineer.

2. After making up pipe joints, fill space between pipe and sides of trench with backfill material half-way up the pipe. Both sides shall be filled for full width of trench at same time and carefully compacted so as to hold the pipe in its proper position.

3. After pipe has been installed, inspected, and approved, place and compact backfill as specified in Section 31 23 33 - Trenching and Backfilling.

END OF SECTION

FILE NUMBER: 21-C1

IDENTIFICATION STAMP
DIVISION OF THE STATE ARCHITECT

01 - 116913 INCR: 1

AC RE FLS ED SSR CD

DATE 01/12/2018

ORGANIC FARM CLASSROOMS INCREMENT I

1800 IGNACIO BLVD.
NOVATO, CA

2017.11.17

CONSTRUCTION SET

LICENSED ARCHITECT
CURTIS L. OWYANG
C-15758
RENEWAL DATE 2-28-19
STATE OF CALIFORNIA

2484 Natomas Park Drive Suite 100 Sacramento CA 95833
916 443 0335 lpasdesign.com **Architecture + Design**

Project # 1102-0005

A0.00

ABBREVIATIONS & CHARACTER SYMBOLS

#	POUND OR NUMBER
&	AND
(E)	EXISTING
(N)	NEW
@	AT
L	ANGLE
Ø	DIAMETER OR ROUND
℄	CENTERLINE
℔	PROPERTY LINE
A.C.	ASPHALT CONCRETE
A.C.P.	ALUMINUM COMPOSITE PANEL
A.D.	AREA DRAIN
A.F.F.	ABOVE FINISH FLOOR
A.L.S.	ASSISTED LISTENING SYSTEM
ACOUS.	ACOUSTICAL
ADJ.	ADJUSTABLE *OR* ADJACENT
AGGR.	AGGREGATE
ALUM.	ALUMINUM
APPROX.	APPROXIMATELY
ARCH.	ARCHITECTURAL
ASB.	ASBESTOS
ASPH.	ASPHALT
BD.	BOARD
BITUM.	BITUMINOUS
BLDG.	BUILDING
BLK.	BLOCK
BLKG.	BLOCKING
BM.	BEAM
BOTT.	BOTTOM
C.B.	CATCH BASIN
C.B.C.	CALIFORNIA BUILDING CODE
C.G.	CORNER GUARD
C.I.	CAST IRON
C.I.P.	CAST IN PLACE
C.J.	CONTROL JOINT
C.L.	CENTERLINE
C.O.	CASED OPENING
C.W.	CURTAIN WALL
CAB.	CABINET
CEM.	CEMENT
CER.	CERAMIC
CLG.	CEILING
CLKG.	CAULKING
CLO.	CLOSET
CLR.	CLEAR
CNTR.	COUNTER
COL.	COLUMN
COMP.	COMPOSITE
CONC.	CONCRETE
CONN.	CONNECTION
CONSTR.	CONSTRUCTION
CONT.	CONTINUOUS
CORR.	CORRIDOR
CTR.	CENTER
CTSK.	COUNTERSUNK
D.F.	DRINKING FOUNTAIN
D.G.	DECOMPOSED GRANITE
D.O.	DOOR OPENING
D.S.	DOWNSPOUT
D.S.P.	DRY STANDPIPE
DBL.	DOUBLE
DEMO.	DEMOLISH
DEPT.	DEPARTMENT
DET.	DETAIL
DIA.	DIAMETER
DIM.	DIMENSION
DISP.	DISPENSER
DN.	DOWN
DR.	DOOR
DTL.	DETAIL
DWG.	DRAWING
DWR.	DRAWER
E.	EAST
E.J.	EXPANSION JOINT
E.O.S.	EDGE OF SLAB
E.P.	ELEC. PANEL
E.W.C.	ELEC. WATER COOLER
EA.	EACH
EL.	ELEVATION
ELEC.	ELECTRICAL
ELEV.	ELEVATOR
EMER.	EMERGENCY
ENCL.	ENCLOSURE
EQ.	EQUAL
EQPT.	EQUIPMENT
EXP.	EXPANSION
EXPO.	EXPOSED
EXST.	EXISTING
EXT.	EXTERIOR
F.A.	FIRE ALARM
F.B.	FLAT BAR
F.D.	FLOOR DRAIN
F.E.	FIRE EXTINGUISHER
F.E.C.	FIRE EXTINGUISHER CABINET
F.F.	FINISH FLOOR
F.H.C.	FIRE HOSE CABINET
F.O.C.	FACE OF CONCRETE
F.O.F.	FACE OF FINISH
F.O.M.	FACE OF MASONRY
F.O.S.	FACE OF STUD
F.S.	FIRE SPRINKLER
FDN.	FOUNDATION
FIN.	FINISH
FL.	FLOOR
FLASH.	FLASHING
FLUOR.	FLUORESCENT
FPRF.	FIREPROOF
FRMG.	FRAMING
FT.	FOOT *OR* FEET
FTG.	FOOTING
FURR.	FURRING
FUT.	FUTURE
G.B.	GRAB BAR
G.S.M.	GALVANIZED SHEET METAL
GA.	GAUGE
GALV.	GALVANIZED
GL.	GLASS
GND.	GROUND
GR.	GRADE
GYP.	GYPSUM
H.B.	HOSE BIB
H.C.	HOLLOW CORE
H.M.	HOLLOW METAL
HDWD.	HARDWOOD
HDWR.	HARDWARE
HORIZ.	HORIZONTAL
HR.	HOUR
HT.	HEIGHT
I.D.	INSIDE DIAMETER
I.S.A.	INTERNATIONAL SYMBOL OF ACCESSIBILITY
INSUL.	INSULATION
INT.	INTERIOR
JAN.	JANITOR
JT.	JOINT
L.F.	LINEAL FOOT
LAM.	LAMINATE
LAV.	LAVATORY
LKR.	LOCKER
LT.	LIGHT
M.H.	MANHOLE
M.O.	MASONRY OPENING
MAX.	MAXIMUM
MECH.	MECHANICAL
MED.	MEDIUM
MEMB.	MEMBRANE
MFR.	MANUFACTURER
MIN.	MINIMUM
MIR.	MIRROR
MISC.	MISCELLANEOUS
MTD.	MOUNTED
MTL.	METAL
MUL.	MULLION
N.	NORTH
N.I.C.	NOT IN CONTRACT
N.R.	NON RATED
N.T.S.	NOT TO SCALE
NO.	NUMBER
NOM.	NOMINAL
O.A.	OVERALL
O.C.	ON CENTER
O.D.	OUTSIDE DIAMETER
O.F.C.I.	OWNER FURNISHED CONTRACTOR INSTALLED
O.F.D.	OVERFLOW DRAIN
O.F.O.I.	OWNER FURNISHED OWNER INSTALLED
O.H.	OPPOSITE HAND
O.S.B.	ORIENTED STRAND BOARD
O/	OVER
OBS.	OBSCURE
OCC.	OCCUPANTS *OR* OCCUPANCY
OFC.	OFFICE
OPNG.	OPENING
OPP.	OPPOSITE
P.L.	PROPERTY LINE
P.LAM.	PLASTIC LAMINATE
P.T.D.	PAPER TOWEL DISPENSER
P.T.D./R.	PAPER TOWEL DISPENSER/RECEPTACLE
P.T.D.F.	PRESSURE TREATED DOUG FIR
PL.	PLATE
PLAS.	PLASTER
PLYWD.	PLYWOOD
PNTD.	PAINTED
PR.	PAIR
PRCST.	PRECAST
R.C.	RESILIENT CHANNEL
R.D.	ROOF DRAIN
R.O.	ROUGH OPENING
R.R.	RESTROOM
R.W.L.	RAIN WATER LEADER
RAD.	RADIUS
REC.	RECESSED
REF.	REFERENCE
REFR.	REFRIGERATOR
REINF.	REINFORCED
REQ.	REQUIRED
RESIL.	RESILIENT
RGTR.	REGISTER
RISER	RISER
RM.	ROOM
RWD.	REDWOOD
S.	SOUTH
S.A.M.	SELF-ADHERED MEMBRANE
S.C.	SOLID CORE
S.C.D.	SEAT COVER DISPENSER
S.D.	SOAP DISPENSER
S.F.	SQUARE FOOT
S.M.S.	SHEET METAL SCREW
S.N.D.	SANITARY NAPKIN DISPENSER
S.N.R.	SANITARY NAPKIN RECEPTACLE
S.O.G.	SLAB ON GRADE
S.S.	STAINLESS STEEL
SCHED.	SCHEDULE
SECT.	SECTION
SEP.	SEPARATE *OR* SEPARATION
SHT.	SHEET
SHTG.	SHEATHING
SHWR.	SHOWER
SIM.	SIMILAR
SPEC.	SPECIFICATION
SQ.	SQUARE
ST.	STATION
STD.	STANDARD
STL.	STEEL
STOR.	STORAGE
STRL.	STRUCTURAL
SUSP.	SUSPENDED
SYM.	SYMMETRICAL
T&G	TONGUE AND GROOVE
T.	TEMPERED GLASS
T.B.	TOWEL BAR
T.O.C.	TOP OF CONCRETE
T.O.P.	TOP OF PARAPET
T.O.STL.	TOP OF STEEL
T.O.W.	TOP OF WALL
T.P.	TOP OF PAVEMENT
T.P.D.	TOILET PAPER DISPENSER
TEL.	TELEPHONE
TER.	TERRAZZO
THK.	THICK
TRANS.	TRANSITION
TRD.	TREAD
TYP.	TYPICAL
U.O.N.	UNLESS OTHERWISE NOTED
UNF.	UNFINISHED
UR.	URINAL
UTIL.	UTILITY
V.I.F.	VERIFY IN FIELD
VER.	VERIFY
VERT.	VERTICAL
VEST.	VESTIBULE
W.	WEST
W.C.	WATER CLOSET
W.O.	WHERE OCCURS
W.P.	WATERPROOF
W.V.	WOOD VENEER
W/	WITH
W/O	WITHOUT
WD.	WOOD
WSCT.	WAINSCOT
WT.	WEIGHT

DRAFTING & MATERIAL SYMBOLS

FLOW LINE
NEW CONTOUR
EXISTING CONTOUR
CENTER LINE
PROPERTY LINE
PROJECTED LINE
HIDDEN LINE
BREAK LINE
MATCH LINE
CONTRACT LIMIT LINE
2ND FLOOR FFEL: 12'-8" — ELEVATION MARK OR DATUM POINT
B1 — WALL TYPE
A — REVISION MARK
12 — GRID LINES
D — NUMBERS VERTICAL / LETTERS HORIZONTAL
NORTH ARROW
LAUNDRY 155 — ROOM NAME AND NUMBER
222.2 — DOOR NUMBER
E — WINDOW TYPE
36 — EQUIPMENT TYPE
1 — KEYNOTE
SECTION (BUILDING)
SECTION IDENTIFICATION
SHEET WHERE SECTION IS DRAWN
PARTIAL SECTION
SECTION IDENTIFICATION
SHEET WHERE SECTION IS DRAWN
DETAIL
DETAIL IDENTIFICATION
SHEET WHERE DETAIL IS DRAWN

EARTH
POROUS FILL
CONCRETE
CAST STONE
CONCRETE BLOCK
BRICK
METAL
CONTNUOUS WOOD
SHIM OR NON-CONT. WOOD BLOCKING
FINISH WOOD
PLYWOOD
GYPSUM WALLBOARD
STONE
RIGID INSULATION
BATT INSULATION
ACOUSTIC TILE
PLASTER ON METAL LATH
PAVING
TILE
GLASS
EXPANSION MATERIAL
SEALANT W/ BACK-UP MATERIAL
CARPET
INTERIOR ELEVATION
ELEVATION IDENTIFICATION
SHEET WHERE ELEVATION IS DRAWN
VIEW SHOWN
ALIGN FINISH SURFACES

DRAWING INDEX

INCREMENT 1

A0.00	COVER SHEET
A0.01	INDEX SHEET
A0.02	CAL GREEN CHECK LIST (DSA)
A0.03	CAL GREEN CHECK LIST (DSA)
A0.10	OVERALL CAMPUS PLAN
A0.20	CODE AND SITE ANALYSIS
A0.30	SITE ACCESSIBILITY PLAN
C1.00	SITE DEMO PLAN
C2.00	GRADING AND DRAINAGE PLAN
C3.00	UTILITY PLAN
C4.00	CIVIL DETAILS
S1.01	GENERAL NOTES
S2.01	CONCRETE TYPICAL DETAILS
S2.02	CONCRETE TYPICAL DETAILS
S3.01	METAL DECK DETAILS AND NOTES
A1.00	OVERALL SITE PLAN
A1.01	ENLARGED SITE PLAN
A1.11	SITE DETAILS
A1.25	FARM STAND PLAN, ELEVATIONS, AND DETAILS
A2.01	FOUNDATION AND FRAMING PLAN
A2.02	ROOF PLAN
A2.11	ELEVATIONS AND SECTIONS
A2.21	FOUNDATION DETAILS
A2.22	STRUCTURE DETAILS
E0.01	SYMBOLS LIST & DRAWING INDEX
E0.02	SCHEDULES & RISER DIAGRAMS
E0.03	TITLE 24 SHEETS
E1.01	POWER & CONDUIT SITE PLAN
E1.02	POWER & LIGHTING PLAN
E4.01	DETAILS
MP0.11	MECHANICAL & PLUMBING LEGEND, SCHEDULE & NOTES
MP0.21	MECHANICAL & PLUMBING LEGEND, SCHEDULE & NOTES
MP2.11	SITE PLAN & ENLARGED PANTRY PLUMBING PLAN
L1.00	LANDSCAPE PLAN
L1.11	LANDSCAPE DETAILS
L2.00	IRRIGATION PLAN
L2.11	IRRIGATION DETAILS
L2.20	HYDROZONE PLAN AND CALCULATIONS

INCREMENT 2 - 60x32 BUILDING

A0.00	COVER SHEET
A0.01	INDEX SHEET - FOR REFERENCE ONLY
A0.20	CODE AND SITE ANALYSIS - FOR REFERENCE ONLY
A0.30	SITE ACCESSIBILITY PLAN - FOR REFERENCE ONLY
A1.00	OVERALL SITE PLAN - FOR REFERENCE ONLY
A1.02	ENLARGED SITE PLAN
E3.01	BUILDING 1, 2, & 3 FIRE ALARM PLAN
E3.02	FIRE ALARM SCHEDULES, NOTES & DETAILS
TS	TITLE SHEET
N1.0	GENERAL NOTES
N2.0	GENERAL NOTES
N3.0	SCHEDULES
N4.0	ACCESSIBILITY AND SIGNAGE
N5.0	MUILTIPLE FLOOR PLAN CONFIGURATIONS
EN.1	ENERGY CALCULATIONS
EN.2	ENERGY CALCULATIONS
EN.3	ENERGY CALCULATIONS
EN.4	ENERGY CALCULATIONS
EN.5	ENERGY CALCULATIONS
EN.6	ENERGY CALCULATIONS
A1.0	DEMONSTRATION KITCHEN FLOOR PLAN
A1.0A	CLASSROOM FLOOR PLAN
A2.0	ROOF PLAN
A2.1	ROOF PLAN DETAILS
A4.0	TYPICAL INTERIOR ELEVATIONS
A4.0A	TYPICAL INTERIOR ELEVATIONS
A5.6	TYPICAL EXTERIOR SYNTHETIC STUCCO ELEVATIONS
A5.6A	TYPICAL EXTERIOR SYNTHETIC STUCCO ELEVATIONS
A5.7	TYPICAL ARCHITECTURAL SYNTHETIC STUCCO DETAILS
A7.2	MISCELLANEOUS DETAILS
S0.0	STEEL MEMBER PROPERTIES
S1.1	TYP 50+15 PSF CONCRETE FOUNDATION PLAN
S1.4	CONCRETE FOUNDATION DETAILS
S1.5	CONCRETE FOUNDATION OPTIONAL UTILITY OPENINGS IN FOOTINGS
S1.6	CONCRETE FOUNDATION DETAILS
S1.7	CONCRETE FOUNDATION OPTIONAL UTILITY OPENINGS IN FOOTINGS
S3.3	FLOOR FRAMING CONCRETE 3-W
S4.1	ROOF FRAMING OPEN SOFFIT DETAILS
S4.2	ROOF FRAMING CLOSED SOFFIT
S5.0	MOMENT RESISTANT FRAME ELEVATIONS
S5.1	FRAME CONNECTION DETAILS
S6.0	STRUCTURAL ELEVATIONS
S8.0	WOOD WALL FRAMING
S8.1	WALL FRAMING DETAILS
M1.0	TYPICAL REFLECTED CEILING PLAN
M1.0A	TYPICAL REFLECTED CEILING PLAN
M1.4	MECHANICAL BUILDING SECTION & CEILING DETAILS
M1.5	MECHANICAL BUILDING DETAILS
M1.6	MECHANICAL ROOF DETAILS
M1.7	CEILING AND MECHANICAL NOTES
E1.0	TYPICAL ELECTRICAL PLAN
E1.0A	TYPICAL ELECTRICAL PLAN
E1.2	ELECTRICAL NOTES AND DETAILS
P1.0	RESTROOM OPTION FLOOR PLANS
P2.0	PLUMBING DETAILS
P3.0	PLUMBING ISOMETRIC

INCREMENT 2 - 24x40 BUILDING

TS	TITLE SHEET
N1.0	GENERAL NOTES
N2.0	GENERAL NOTES
N3.0	SCHEDULES
N4.0	ACCESSIBILITY AND SIGNAGE
N5.0	MUILTIPLE FLOOR PLAN CONFIGURATIONS
EN.1	ENERGY CALCULATIONS
EN.2	ENERGY CALCULATIONS
EN.3	ENERGY CALCULATIONS
EN.4	ENERGY CALCULATIONS
EN.5	ENERGY CALCULATIONS
EN.6	ENERGY CALCULATIONS
A1.0	TYPICAL FLOOR PLAN
A2.0	ROOF PLAN
A2.1	ROOF DETAILS
A4.0	INTERIOR ELEVATIONS - TYPICAL CLASSROOM
A4.1	INTERIOR ELEVATIONS - RESTROOM OPTION
A5.6	TYPICAL EXTERIOR ELEVATIONS - SYNTHETIC STUCCO OPTION
A5.7	TYPICAL ARCHITECTURAL DETAILS - SYNTHETIC STUCCO OPTION
A7.2	MISCELLANEOUS ARCHITECTURAL DETAILS
S0.0	STEEL MEMBER PROPERTIES
S1.1	CONCRETE FOUNDATION PLAN - 50+15 PSF LIVE LOAD
S1.4	CONCRETE FOUNDATION DETAILS
S1.5	CONCRETE FOUNDATION DETAILS
S1.6	CONCRETE FOUNDATION DETAILS
S1.7	CONCRETE FOUNDATION OPTIONAL UTILITY OPENINGS IN FOOTINGS
S3.3	FLOOR FRAMING PLAN & DETAILS - CONCRETE/3-W DECK OPTION
S4.1	FLOOR FRAMING PLAN & DETAILS - ENCLOSED SOFFIT OPTION
S4.2	FLOOR FRAMING DETAILS
S5.0	MOMENT FRAME ELEVATIONS & DETAILS
S5.1	MOMENT FRAME CONNECTION DETAILS
S6.0	TYPICAL LONGITUDINAL & TRANSVERSE FRAME ELEVATIONS
S8.0	WOOD STUDS WALL FRAMING ELEVATIONS & SCHEDULES
S8.1	WOOD STUDS WALL FRAMING DETAILS
M1.0	TYPICAL REFLECTED CEILING PLAN
M1.4	MECHANICAL BUILDING SECTION & CEILING DETAILS
M1.5	CEILING & MECHANICAL DETAILS
M1.6	MECHANICAL ROOF DETAILS
M1.7	CEILING NOTES & MECHANICAL NOTES, SCHEDULES
E1.0	TYPICAL ELECTRICAL PLAN
E1.2	ELECTRICAL NOTES, PANEL LAYOUT & DETAILS
P1.0	RESTROOM OPTION PLUMBING PLANS & FIXTURE SCHEDULE
P2.0	PLUMBING DETAILS & ACCESSIBLE DETAILS
P3.0	PLUMBING ISOMETRICS DRAWINGS

SCOPE OF WORK:
1.0 SITE CONTRACTOR SHALL BE RESPONSIBLE FOR ALL WORK INDICATED IN INCREMENT 1.
2.0 SITE CONTRACTOR HAS LIMITED WORK FOR INCREMENT 2; INCLUDING FIRE ALARM, AND BUILDING FOUNDATIONS FOR MODULAR BUILDINGS. MARIN COMMUNITY COLLEGE DISTRICT HOLDS THE CONTRACT FOR MODULAR CONSTRUCTION.

GENERAL NOTES

1. CONTRACTOR SHALL VERIFY ALL CONDITIONS AND DIMENSIONS ON SITE PRIOR TO STARTING CONSTRUCTION. SHOULD A DISCREPANCY APPEAR IN THE SPECIFICATIONS OR DRAWINGS, OR IN THE WORK DONE BY OTHERS FROM THE CONTRACT DOCUMENTS THAT AFFECT ANY WORK, NOTIFY THE ARCHITECT AT ONCE FOR INSTRUCTION ON HOW TO PROCEED. IF THE CONTRACTOR PROCEEDS WITH THE WORK AFFECTED WITHOUT INSTRUCTIONS FROM THE ARCHITECT, THE CONTRACTOR SHALL MAKE GOOD ANY RESULTING DAMAGE OR DEFECT TO THE SATISFACTION OF THE ARCHITECT. SHOULD A CONFLICT OCCUR IN OR BETWEEN DRAWINGS AND SPECIFICATIONS, OR WHERE DETAIL REFERENCES ON CONTRACT DRAWINGS HAVE BEEN OMITTED, THE CONTRACTOR IS DEEMED TO HAVE ESTIMATED THE MOST EXPENSIVE MATERIALS AND CONSTRUCTION METHOD INVOLVED, UNLESS A WRITTEN DECISION FROM THE ARCHITECT HAS BEEN OBTAINED WHICH DESCRIBES AN ALTERNATE METHOD AND/OR MATERIALS.
2. THE CONTRACTOR SHALL CONFINE HIS OPERATIONS ON THE SITE TO AREAS PERMITTED BY THE OWNER. THE WORK SHALL BE DONE IN ACCORDANCE WITH APPLICABLE LAWS, LOCAL ORDINANCES, PERMITS AND THE CONTRACT DOCUMENTS. THE JOB SITE SHALL BE MAINTAINED IN A CLEAN, ORDERLY CONDITION FREE OF DEBRIS AND LITTER, AND SHALL NOT BE UNREASONABLY ENCUMBERED WITH ANY MATERIALS OR EQUIPMENT. EACH SUB-CONTRACTOR IMMEDIATELY UPON COMPLETION OF EACH PHASE OF HIS/HER WORK SHALL REMOVE ALL TRASH AND DEBRIS AS A RESULT OF HIS OPERATION.
3. CONTRACTOR SHALL NOTIFY THE ARCHITECT WHERE A CONFLICT OCCURS ON ANY OF THE CONTRACT DOCUMENTS OR DRAWINGS. CONTRACTOR IS NOT TO ORDER MATERIAL OR CONSTRUCT ANY PORTION OF THE BUILDING THAT IS IN CONFLICT UNTIL CONFLICT IS RESOLVED WITH THE AFFECTED PARTIES.
4. DIMENSIONING RULES:
   - A. NOTED DIMENSIONS SHALL AT ALL TIMES TAKE PRECEDENCE OVER SCALED DIMENSIONS
   - B. ALL DIMENSIONS OF NEW WORK ARE TO THE FACE OF STUD U.O.N.
   - C. ALL DIMENSIONS OF EXISTING WORK ARE TO FACE OF FINISH U.O.N.
   - D. CEILING HEIGHT DIMENSIONS ARE FROM TOP OF FLOOR SLAB TO FINISH FACE OF CEILING.
   - E. DIMENSIONS NOTED "CLEAR" OR "CLR" MUST BE PRECISELY MAINTAINED.
   - F. DIMENSIONS ARE NOT ADJUSTABLE WITHOUT APPROVAL OF THE ARCHITECT.
   - G. +/- VERTICAL DIMENSIONS ARE FROM THE TOP OF THE FLOOR SLAB DATUM LINE, ESTABLISHED BY THE CONTRACTOR SUBJECT TO THE APPROVAL OF THE OWNER OR ARCHITECT, UNLESS OTHERWISE NOTED.
   - H. DIMENSIONS MARKED "A.F.F." ARE ABOVE FINISHED FLOOR MATERIALS. IN CARPETED AREAS, THE TOP OF SLAB IS CONSIDERED TO BE THE FINISHED FLOOR.
   - I. DIMENSIONS MARKED V.I.F. SHALL BE "VERIFIED" IN THE FIELD BY THE CONTRACTOR.
   - J. ALL DIMENSIONS ARE TO STRUCTURAL COMPONENTS UNLESS OTHERWISE NOTED.
   - K. DIMENSIONS LOCATING DOORS ARE TO THE INSIDE EDGE OF JAMB, U.N.O.
5. SHOULD ANY CONDITIONS DEVELOP NOT COVERED BY THE CONTRACT DOCUMENTS, OR IF A CHANGE IN THE SCOPE OF WORK IS PROPOSED, A CHANGE ORDER DETAILING AND SPECIFYING THE REQUIRED CHANGE(S) SHALL BE SUBMITTED TO AND APPROVED BY DSA-ACCESS BEFORE PROCEEDING WITH THE WORK.

CONTACT INFORMATION

DISTRICT PROJECT MANAGER
COLLEGE OF MARIN
CONTACT: DONNA MARTIN
PH: 408-547-7057

LANDSCAPE ARCHITECT
LPAS
2484 NATOMAS PARK DR., SUITE 100
SACRAMENTO, CA 95833
PH. (916) 443-0335
FAX (916) 441-2823

APPLICABLE CODES

2016 CALIFORNIA CODE OF REGULATIONS, TITLE 24

PART 1	CALIFORNIA ADMINISTRATIVE CODE
PART 2	CALIFORNIA BUILDING CODE
PART 3	CALIFORNIA ELECTRICAL CODE
PART 4	CALIFORNIA MECHANICAL CODE
PART 5	CALIFORNIA PLUMBING CODE
PART 9	CALIFORNIA FIRE CODE
PART 11	CALIFORNIA GREEN BUILDING STANDARDS CODE

DEFERRED SUBMITTAL

1. NONE

PROJECT LOCATION

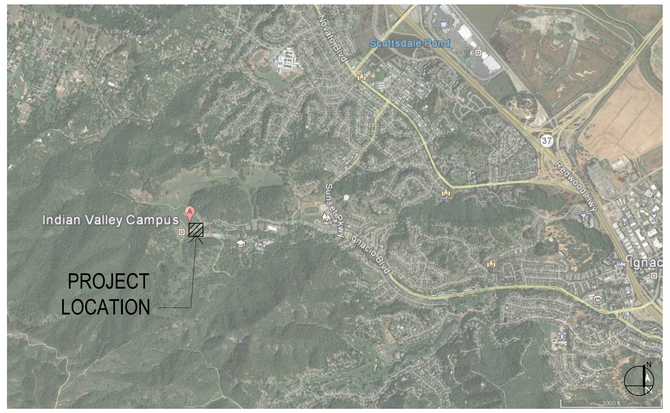

STATEMENT OF GENERAL CONFORMANCE

Statement of General Conformance
FOR ARCHTIECTS/ENGINEERS WHO UTILIZE PLANS,
INCLUDING BUT NOT LIMITED TO SHOP DRAWINGS, PREPARED BY OTHER LICENSED DESIGN PROFESSIONALS AND/OR CONSULTANTS

(DSA Accplication No.: DSA File No.:)

☐ The drawings or sheets listed on the cover or index sheet
☐ This drawing, page or specification/calculations

have been prepared by other design professionals or consultants who are licensed and/or authorized to prepare such drawings in this state. It has been examined by me for:

1. design intent and appears to meet the appropriate requirements of Title 24, California Code of Regulations and the project specifications prepared by me, and
2. coordination with my plans and specifications and is acceptable for incorporation into the construction of this project.

The statement of General Conformance "shall not be construed as relieving me of my rights, duties, and responsibilities under Sections 17302 and 81138 of the Education Code and Sections 4-336, 4-341 and 4-344" of Title 24, Part 1. (Title 24, Part 1, Section 4-317(b))

I find that: ☐ The drawings or sheets listed on the cover or index sheet
☐ This drawing or page

☐ is/are in general conformance with the project design, and
☐ has/have been coordinated with the project plans and specifications

Signature:_____ Date: _____

Architect or Engineer designated to be in general responsible charge

Print Name:_____

License No._____ Expiration Date:_____

PROJECT TEAM

OWNER
COLLEGE OF MARIN
CONTACT: GREG NELSON
PH. (415) 884-3101

ELECTRICAL ENGINEER
THE ENGINEERING ENTERPRISE
1125 HIGH STREET
AUBURN, CA 95603
PH. (530) 886-8556

STRUCTURAL ENGINEER
THORTON TOMASETTI, INC.
650 CALIFORNIA STREET, SUITE 1400
SAN FRANCISCO, CA
PH. (415) 365-6901

LANDSCAPE ARCHITECT
LPAS
2484 NATOMAS PARK DR., SUITE 100
SACRAMENTO, CA 95833
PH. (916) 443-0335
FAX (916) 441-2823

CIVIL ENGINEER
CSW
45 Leveroni Court
Novato, CA 94949
PH. (415) 883-9850

MECHANICAL AND PLUMBING
TURLEY
2431 CAPITOL AVE
SACRAMENTO, CA 95816
PH. (916) 325-1065

PROJECT DESCRIPTION

As allowed per IR A-11 Increment Submittals:

Increment 1: Site improvements including utilities, hardscape, landscape, shade structures, access from parking lot

Building 24 is DSA #109778; access only. Building 24 is a barn and is considered a non-building structure. No work to interior of building; limited work to exterior of building including access, lighting, and painting.

Building 25 and 26, DSA #109778, to be salvaged to owner.

Increment 2: Three modular buildings. Two modular buildings house two classrooms each. One modular building provides offices and restrooms. Fire alarm and signage for buildings, exterior drinking fountain barrier.

Parking lot DSA #: 01-116739 OTC.
Increment 1 DSA #: 01-116913

LPAS
2484 Natomas Park Drive Suite 100 Sacramento CA 95833
916 443 0335 lpasdesign.com Architecture + Design

ORGANIC FARM CLASSROOMS INCREMENT 2

INDIAN VALLEY CAMPUS
COLLEGE OF MARIN

NOVATO, CA

LICENSED ARCHITECT
CURTIS A. OWYANG
C-15758
2-28-18
RENEWAL
STATE OF CALIFORNIA

ARCHITECT'S STAMP APPROVAL

THIS DOCUMENT CONTAINS INFORMATION THAT IS PROPRIETARY TO LPAS, INC. AND IS FURNISHED FOR THE PURPOSES OF REVIEW, BIDDING OR CONSTRUCTION OF THE PROJECT LISTED IN THE JOB TITLE BOX ABOVE AND SHALL NOT BE USED FOR ANY PURPOSE OR RELEASED TO ANY OTHER PARTY WITHOUT THE WRITTEN CONSENT OF LPAS, INC. INFORMATION CONTAINED HEREIN IS AN INSTRUMENT OF PROFESSIONAL SERVICES AND SHALL REMAIN THE PROPERTY OF LPAS, INC. ALL RIGHTS RESERVED COPYRIGHT © 2009.

THIS DRAWING IS NOT FINAL OR TO BE USED FOR CONSTRUCTION UNTIL IT IS SIGNED BY THE ARCHITECT AND ENGINEER.

CONSULTANT

INDEX SHEET

PROJECT NO: 1102-0005
DATE: 11-17-2017

SHEET NO:

A0.01

CONSTRUCTION SET

Attachment 1

2016 CALIFORNIA GREEN BUILDING STANDARDS CODE

Division of the State Architect – Structural Safety (DSA-SS)
(CCR, Title 24, Part 11)

APPLICATION MATRIX	Mandatory Chapter 5
DIVISION 5.1 - PLANNING AND DESIGN	
SITE DEVELOPMENT	
5.106.4.2 Bicycle parking. For public schools and community colleges comply with Sections 5.106.4.2.1 and 5.106.4.2.2	
5.106.4.2.1 Student bicycle parking. Provide permanently anchored bicycle racks conveniently accessed with a minimum of four two-bike capacity racks per new building.	☐
5.106.4.2.2 Staff bicycle parking. Provide permanent secure bicycle parking conveniently accessed with a minimum of two staff bicycle parking spaces per new building. Acceptable parking facilities shall be convenient from the street or staff parking area and shall meet one of the following:	☐
1. Covered, lockable enclosures with permanently anchored racks for bicycles;	
2. Lockable bicycle rooms with permanently anchored racks; or	
3. Lockable, permanently anchored bicycle lockers.	
5.106.8 Light pollution reduction [N]. Outdoor lighting systems shall be designed and installed to comply with the following:	☐
1. The minimum requirements in the *California Energy Code* for Lighting Zones 1-4 as defined in Chapter 10 of the *California Administrative Code*; and	
2. Backlight, Uplight and Glare (BUG) ratings as defined in IESNA TM-15-11; and	
3. Allowable BUG ratings not exceeding those shown in Table 5.106.8, or	
Comply with a local ordinance lawfully enacted pursuant to Section 101.7, whichever is more stringent.	
Exceptions: [N]	
1. Luminaires that qualify as exceptions in Section 140.7 of the *California Energy Code*.	
2. Emergency lighting.	
3. Building facade meeting the requirements in Table 140.7-B of the *California Energy Code*, Part 6.	
4. Custom lighting features as allowed by the local enforcing agency, as permitted by Section 101.8 Alternate materials, designs and methods of construction	

APPLICATION MATRIX	Mandatory Chapter 5
Note: [N] See also *California Building Code*, Chapter 12, Section 1205.6 for college campus lighting requirements for parking facilities and walkways. **Table 5.106.8**	
5.106.10 Grading and paving. Construction plans shall indicate how site grading or a drainage system will manage all surface water flows to keep water from entering buildings. Examples of methods to manage surface water include, but are not limited to, the following:	☐
1. Swales.	
2. Water collection and disposal systems.	
3. French drains.	
4. Water retention gardens.	
5. Other water measures which keep surface water away from buildings and aid in groundwater recharge.	
Exception: Additions and alterations not altering the drainage path.	
DIVISION 5.2 - ENERGY EFFICIENCY	
GENERAL	
5.201.1 California Energy Code. For the purposes of mandatory energy efficiency standards in this code, the California Energy Commission will continue to adopt mandatory standards. New construction, additions, and alterations must comply with the *California Energy Code*. Refer to *California Energy Code* Table 100.0-A	☐
DIVISION 5.3 - WATER EFFICIENCY AND CONSERVATION	
INDOOR WATER USE	
5.303.3 Water conserving plumbing fixtures and fittings. Plumbing fixtures (water closets and urinals) and fittings (faucets and showerheads) shall comply with the following:	☐
5.303.3.1 Water closets. The effective flush volume of all water closets shall not exceed 1.28 gallons per flush. Tank-type water closets shall be certified to the performance criteria of the U.S. EPA WaterSense Specifications for Tank-Type Toilets.	
Note: The effective flush volume of dual flush toilets is defined as the composite, average flush volume of two reduced flushes and one full flush.	
5.303.3.2 Urinals.	
5.303.3.2.1 Wall mounted Urinals. The effective flush volume of wall mounted urinals shall not exceed 0.125 gallons per flush.	☐
5.303.3.2.2 Floor mounted urinals. The effective flush volume of floor mounted or other urinals shall not exceed 0.5 gallons per flush.	☐

APPLICATION MATRIX	Mandatory Chapter 5
5.303.3.3 Showerheads	
5.303.3.3.1 Single showerhead. Showerheads shall have a maximum flow rate of not more than 2.0 gallons per minute at 80 psi. Showerheads shall be certified to the performance criteria of the U.S. EPA WaterSense Specifications for showerheads.	☐
5.303.3.3.2 Multiple showerheads serving one shower. When a shower is served by more than one showerhead, the combined flow rate of all showerheads and/or other shower outlets controlled by a single valve shall not exceed 2.0 gallons per minute at 80 psi, or the showerhead shall be designed to allow only one shower outlet to be in operation at one time.	☐
Note: A hand-held shower shall be considered a showerhead.	
5.303.3.4 Faucets and fountains.	
5.303.3.4.1 Non-residential lavatory facets. Non-residential lavatory faucets shall have a maximum flow rate of not more than 0.5 gallons per minute at 60 psi.	☐
5.303.3.4.2 Kitchen faucets. Kitchen faucets shall have a maximum flow rate of not more than 1.8 gallons per minute at 60 psi. Kitchen faucets may temporarily increase the flow above the maximum rate, but not to exceed 2.2 gallons per minute at 60 psi, and must default to a maximum flow rate of 1.8 gallons per minute at 60 psi.	☐
5.303.3.4.3 Wash fountains. Wash fountains shall have a maximum flow rate of not more than 1.8 gallons per minute/20[rim space (inches) at 60 psi].	☐
5.303.3.4.4 Metering faucets. Metering faucets shall not deliver more than 0.20 gallons per cycle.	☐
5.303.3.4.5 Metering faucets for wash fountains. Metering faucets for wash fountains shall have a maximum flow rate of not more than 0.20 gallons per cycle/20[rim space (inches) at 60 psi].	☐
Note: Where complying faucets are unavailable, aerators or other means may be used to achieve reduction.	
5.303.6 Standards for plumbing fixtures and fittings. Plumbing fixtures and fittings shall be installed in accordance with the *California Plumbing Code*, and shall meet the applicable standards referenced in Table 1701.1 of the *California Plumbing Code* and in Chapter 6 of this code**.**	☐

APPLICATION MATRIX	Mandatory Chapter 5
OUTDOOR WATER USE	
5.304.6 Outdoor potable water use in landscape areas. For public schools and community colleges, landscape projects as described in Sections 5.304.6.1 and 5.304.6.2 shall comply with the California Department of Water Resources' Model Water Efficient Landscape Ordinance (MWELO) commencing with Section 490 of Chapter 2.7, Division 2, Title 23, California Code of Regulations, except that the evapotranspiration adjustment factor (ETAF) shall be 0.65 with an additional water allowance for special landscape areas (SLA) of 0.35.	
Exception: Any project with an aggregate landscape area of 2,500 square feet or less may comply with the prescriptive measures contained in Appendix D of the MWELO.	
5.304.6.1 Newly constructed landscapes. New construction projects with an aggregate landscape area equal to or greater than 500 square feet.	☐
5.304.6.2 Rehabilitated landscapes. Rehabilitated landscape projects with an aggregate landscape area equal to or greater than 1,200 square feet.	☐
DIVISION 5.4 - MATERIAL CONSERVATION AND RESOURCE EFFICIENCY	
WATER RESISTANCE AND MOISTURE MANAGEMENT	
5.407.1 Weather protection. Provide a weather-resistant exterior wall and foundation envelope as required by *California Building Code*, Section 1403.2 (Weather Protection) and *California Energy Code* Section 150, (Mandatory Features and Devices), manufacturer's installation instructions, or local ordinance, whichever is more stringent.	☐
5.407.2 Moisture control. Employ moisture control measures by the following methods:	
5.407.2.1 Sprinklers. Design and maintain landscape irrigation systems to prevent spray on structures.	☐
5.407.2.2 Entries and openings. Design exterior entries and/or openings subject to foot traffic or wind-driven rain to prevent water intrusion into buildings as follows:	
5.407.2.2.1 Exterior door protection. Primary exterior entries shall be covered to prevent water intrusion by using nonabsorbent floor and wall finishes within at least 2 feet around and perpendicular to such openings plus at least one of the following:	☐
1. An installed awning at least 4 feet in depth.	
2. The door is protected by a roof overhang at least 4 feet in depth.	
3. The door is recessed at least 4 feet.	
4. Other methods which provide equivalent protection.	
5.407.2.2.2 Flashing. Installed flashing integrated with a drainage plane.	☐

APPLICATION MATRIX	Mandatory Chapter 5
DIVISION 5.4 - MATERIAL CONSERVATION AND RESOURCE EFFICIENCY	
CONSTRUCTION WASTE REDUCTION, DISPOSAL AND RECYCLING	
5.408.1 Construction waste management. Recycle and/or salvage for reuse a minimum of 65 percent of the nonhazardous construction and demolition waste in accordance with Section 5.408.1.1, 5.408.1.2 or 5.408.1.3; or meet a local construction and demolition waste management ordinance, whichever is more stringent.	
5.408.1.1 Construction waste management plan. Where a local jurisdiction does not have a construction and demolition waste management ordinance that is more stringent, submit a construction waste management plant that:	☐
1. Identifies the construction and demolition waste materials to be diverted from disposal by efficient usage, recycling, reuse on the project or salvage for future use or sale.	
2. Determines if construction and demolition waste materials will be sorted on-site (source-separated) or bulk mixed (single stream).	
3. Identifies diversion facilities where construction and demolition waste material collected will be taken.	
4. Specifies that the amount of construction and demolition waste materials diverted shall be calculated by weight or volume, but not by both.	
5.408.1.2 Waste management company. Utilize a waste management company that can provide verifiable documentation that the percentage of construction and demolition waste material diverted from the landfill complies with this section.	☐
Note: The owner or contractor shall make the determination of the construction and demolition waste material will be diverted by a waste management company.	
Exceptions to Sections 5.408.1.1 and 5.408.1.2:	
1. Excavated soil and land-clearing debris.	
2. Alternate waste reduction methods developed by working with local agencies if diversion or recycle facilities capable of compliance with this item do not exist.	
3. Demolition waste meeting local ordinance or calculated in consideration of local recycling facilities and markets.	
5.408.1.3 Waste stream reduction alternative. The combined weight of new construction disposal that does not exceed two pounds per square foot of building area may be deemed to meet the 65 percent minimum requirement as approved by the enforcing agency.	☐

APPLICATION MATRIX	Mandatory Chapter 5
BUILDING MAINTENANCE AND OPERATION	
5.410.1 Recycling by occupants. Provide readily accessible areas that serve the entire building and are identified for the depositing, storage and collection of non-hazardous materials for recycling, including (at a minimum) paper, corrugated cardboard, glass, plastics, organic waste, and metals or meet a lawfully enacted local recycling ordinance, if more restrictive.	☐
Exception: Rural jurisdictions that meet and apply for the exemption of Public Resources Code 42649.82 (a)(2)(A) et seq. will also be exempt from the organics waste portion of this section.	
5.410.1.2 Sample ordinance. Space allocation for recycling areas shall comply with Chapter 18, Part 3, Division 30 of the *Public Resources Code*. Chapter 18 is known as the California Solid Waste Reuse and Recycling Access Act of 1991 (Act).	☐
Note: A sample ordinance for use by local agencies may be found in Appendix A of the document at the CalRecycle's website.	
DIVISION 5.5 ENVIRONMENTAL QUALITY	
POLLUTANT CONTROL	
5.504.3 Covering of duct openings and protection of mechanical equipment during construction. At the time of rough installation and during storage on the construction site until final startup of the heating, cooling and ventilating equipment, all duct and other related air distribution component openings shall be covered with tape, plastic, sheetmetal or other methods acceptable to the enforcing agency to reduce the amount of dust, water and debris which may enter the system.	☐
5.504.4 Finish material pollutant control. Finish materials shall comply with Sections 5.504.4.1 through 5.504.4.6.	
5.504.4.1 Adhesives, sealants, and caulks. Adhesives, sealants, and caulks used on the project shall meet the requirements of the following standards:	
1. Adhesives, adhesive bonding primers, adhesive primers, sealants, sealant primers, and caulks shall comply with local or regional air pollution control or air quality management district rules where applicable, or SCAQMD Rule 1168 VOC limits, as shown in Tables 5.504.4.1 and 5.504.4.2. Such products also shall comply with the Rule 1168 prohibition on the use of certain toxic compounds (chloroform, ethylene dichloride, methylene chloride, perchloroethylene, and trichloroethylene), except for aerosol products as specified in Subsection 2, below.	☐
2. Aerosol adhesives, and smaller unit sizes of adhesives, and sealant or caulking compounds (in units of product, less packaging, which do not weigh more than one pound and do not consist of more than 16 fluid ounces) shall comply with statewide VOC standards and other requirements, including prohibitions on use of certain toxic compounds, of *California Code of Regulations*, Title 17, commencing with Section 94507.	☐
TABLE 5.504.4.1 - ADHESIVE VOC LIMIT; TABLE 5.504.4.2 - SEALANT VOC LIMIT	

APPLICATION MATRIX	Mandatory Chapter 5
5.504.4.3 Paints and coatings. Architectural paints and coatings shall comply with VOC limits in Table 1 of the ARB Architectural Coatings Suggested Control Measure, as shown in Table 5.504.4.3, unless more stringent local limits apply. The VOC content limit for coatings that do not meet the definitions for the specialty coatings categories listed in Table 5.504.4.3, shall be determined by classifying the coating as a Flat, Nonflat, or Nonflat-High Gloss coating, based on its gloss, as defined in Subsections 4.21, 4.36, and 4.37 of the 2007 California Air Resources Board, Suggested Control Measure, and the corresponding Flat, Nonflat, or Nonflat-High Gloss VOC limit in Table 5.504.4.3 shall apply.	☐
TABLE 5.504.4.3 - VOC CONTENT LIMITS FOR ARCHITECTURAL COATINGS	
5.504.4.3.1 Aerosol paints and coatings. Aerosol paints and coatings shall meet the PWMR Limits for ROC in Section 94522(a)(3) and other requirements, including prohibitions on use of certain toxic compounds and ozone depleting substances, in Sections 94522(c)(2) and (d)(2) of *California Code of Regulations*, Title 17, commencing with Section 94520; and in areas under the jurisdiction of the Bay Area Air Quality Management District additionally comply with the percent VOC by weight of product limits of Regulation 8 Rule 49.	☐
5.504.4.4 Carpet systems. All carpet installed in the building interior shall meet at least one of the following testing and product requirements:	☐
1. Carpet and Rug Institute's Green Label Plus Program.	
2. Compliant with the VOC-emission limits and testing requirements specified in the California Department of Public Health Standard Method for the Testing and Evaluation Volatile Organic Chemical Emissions from Indoor Sources Using Environmental Chambers, Version1.1, February 2010 (also known as CDPH Standard Method V1.1. or *Specification 01350*)	
3. NSF/ANSI 140 at the Gold level or higher.	
4. Scientific Certifications Systems Sustainable Choice; or	
5. Compliant with the Collaborative for High Performance Schools California (CA-CHPS) Criteria Interpretation for EQ 7.0 and EQ 7.1 (formerly EQ 2.2) dated July 2012 and listed in the CHPS High Performance Product Database.	
5.504.4.4.1 Carpet cushion. All carpet cushion installed in the building interior shall meet the requirements of the Carpet and Rug Institute Green Label program**.**	☐
5.504.4.4.2 Carpet adhesive. All carpet adhesive shall meet the requirements of Table 5.504.4.1.	☐
5.504.4.5 Composite wood products. Hardwood plywood, particleboard, and medium density fiberboard composite wood products used on the interior or exterior of the building shall meet the requirements for formaldehyde as specified in ARB's Air Toxics Control Measure (ATCM) for Composite Wood (17 CCR 93120 et seq.). Those materials not exempted by the ATCM must meet the specified emission limits as shown in Table 5.504.4.5.	☐
TABLE 5.504.4.5 - FORMALDEHYDE LIMITS	

APPLICATION MATRIX	Mandatory Chapter 5
5.504.4.6 Resilient flooring systems. For 80 percent of floor area receiving resilient flooring, installed resilient flooring shall meet at least one of the following :	☐
1. Certified under the Resilient Floor Covering Institute (RFCI) FloorScore program;	
2. Compliant with the VOC-emission limits and testing requirements specified in the California Department of Public Health 2010 Standard Method for the Testing and Evaluation Chambers, Version 1.1, February 2010;	
3. Compliant with the Collaborative for High Performance Schools California (CA-CHPS) Criteria Interpretation for EQ 7.0 and EQ 7.1 (formerly EQ 2.2) dated July 2012 and listed in the CHPS High Performance Product Database; or	
4. Products certified under the UL GREENGUARD Gold (formerly the Greenguard Children & Schools program).	
5.504.5.3 Filters. In mechanically ventilated buildings, provide regularly occupied areas of the building with air filtration media for outside and return air prior to occupancy that provides at least a Minimum Efficiency Reporting Value (MERV) of 8. MERV 8 filters shall be installed prior to occupancy and recommendations for maintenance with filters of the same value shall be included in the operation and maintenance manual.	☐
Exceptions:	
1. An ASHRAE 10-percent to 15-percent efficiency filter shall be permitted for an HVAC unit meeting the *2016 California Energy Code* having 60,000 Btu/h or less capacity per fan coil, if the energy use of the air delivery system is 0.4 W/cfm or less at the design air flow.	
2. Existing mechanical equipment.	
5.504.5.3.1 Labeling. Installed filters shall be clearly labeled by the manufacturer indicating the MERV rating.	☐
INDOOR MOISTURE CONTROL	
5.505.1 Indoor moisture control. Buildings shall meet or exceed the provisions of *California Building Code*, CCR, Title 24, Part 2, Sections 1203 (Ventilation) and Chapter 14 (Exterior Walls). For additional measures not applicable to low-rise residential occupancies, see Section 5.407.2 of this code.	☐
INDOOR AIR QUALITY	
5.506.1 Outside air delivery. For mechanically or naturally ventilated spaces in buildings, meet the minimum requirements of Section 120.1 (Requirements For Ventilation) of the *2016 California Energy Code*, or the applicable local code, whichever is more stringent, and Division 1, Chapter 4 of CCR, Title 8.	☐

LPAS
2484 Natomas Park Drive Suite 100 Sacramento CA 95833
916 443 0335 lpasdesign.com Architecture + Design

ORGANIC FARM CLASSROOMS INCREMENT 1

INDIAN VALLEY CAMPUS
COLLEGE OF MARIN

NOVATO, CA

FILE NUMBER: 21-C1
IDENTIFICATION STAMP
DIVISION OF THE STATE ARCHITECT
01 - 116913 INCR: 1
AC RE FLS ED SSR CD
DATE 01/12/2018

LICENSED ARCHITECT
CURTIS A. OWYANG
C-26758
RENEWAL DATE
STATE OF CALIFORNIA

ARCHITECT'S STAMP APPROVAL

THIS DOCUMENT CONTAINS INFORMATION THAT IS PROPRIETARY TO LPAS, INC. AND IS FURNISHED FOR THE PURPOSES OF REVIEW, BIDDING OR CONSTRUCTION OF THE PROJECT LISTED IN THE JOB TITLE BOX ABOVE AND SHALL NOT BE USED FOR ANY OTHER PURPOSE OR RELEASED TO ANY OTHER PARTY WITHOUT THE WRITTEN CONSENT OF LPAS, INC. INFORMATION CONTAINED HEREIN IS AN INSTRUMENT OF PROFESSIONAL SERVICES AND SHALL REMAIN THE PROPERTY OF LPAS, INC. ALL RIGHTS RESERVED COPYRIGHT © 2009.

THIS DRAWING IS NOT FINAL OR TO BE USED FOR CONSTRUCTION UNTIL IT IS SIGNED BY THE ARCHITECT AND ENGINEER.

CONSULTANT

CALGREEN CHECKLIST (DSA)

PROJECT NO: 1102-0005
DATE: 11-17-2017

SHEET NO:

A0.02

CONSTRUCTION SET

APPLICATION MATRIX	Mandatory Chapter 5
ENVIRONMENTAL COMFORT	
5.507.4 Acoustical control. Employ building assemblies and components with Sound Transmission Class (STC) values determined in accordance with ASTM E 90 and ASTM E 413 or Outdoor–Indoor Sound Transmission Class (OITC) determined in accordance with ASTM E 1332, using either the prescriptive or performance method in Section 5.507.4.1 or 5.507.4.2.	
Exception: Buildings with few or no occupants or where occupants are not likely to be affected by exterior noise, as determined by the enforcement authority, such as factories, stadiums, storage, enclosed parking structures and utility buildings.	
Exception: [DSA-SS] For public schools and community colleges, the requirement of this section and all subsections apply only to new construction.	
5.507.4.1 Exteriors noise transmission prescriptive method. Wall and roof-ceiling assemblies exposed to the noise source making up the building or addition envelope or altered envelope shall meet a composite STC rating of at least 50 or a composite OITC rating of no less than 40, with exterior windows of a minimum STC of 40 or OITC of 30 in the following locations:	☐
1. Within the 65 CNEL noise contour of an airport.	
Exceptions:	
1. L_{dn} or CNEL for military airports shall be determined by the facility Air Installation Compatible Land Use Zone (AICUZ) plan.	
2. L_{dn} or CNEL for other airports and heliports for which a land use plans has not been developed shall be determined by the local general plan noise element.	
2. Within the 65 CNEL or L_{dn} noise contour of a freeway or expressway railroad, industrial source or fixed-guideway source as determined by the Noise Element of the General Plan.	
5.507.4.1.1 Noise exposure where noise contours are not readily available. Buildings exposed to a noise level of 65 dBL_{eq}-1-hr during any hour of operation shall have building, addition or alteration exterior wall and roof-ceiling assemblies exposed to the noise source meeting a composite STC rating of at least 45 (or OITC 35), with exterior windows of a minimum STC of 40 or (OITC 30).	☐
5.507.4.2 Performance method. For buildings located as defined in Section 5.507.4.1 or 5.507.4.1.1, wall and roof-ceiling assemblies exposed to the noise source making up the building or addition envelope or altered envelope shall be constructed to provide an interior noise environment attributable to exterior sources that does not exceed an hourly equivalent noise level (L_{eq} -1Hr) of 50 dBA in occupied areas during any hour of operation.	☐
5.507.4.2.1 Site features. Exterior features such as sound wall or earth berms may be utilized as appropriate to the building, addition or alteration project to mitigate sound migration to the interior.	☐

APPLICATION MATRIX	Mandatory Chapter 5
5.507.4.3 Interior sound transmission. Wall and floor-ceiling assemblies separating tenant spaces and tenant spaces and public places shall have an STC of at least 40.	☐
Note: Examples of assemblies and their various STC rating may be found at the California Office of Noise Control website.	
OUTDOOR AIR QUALITY	
5.508.1 Ozone depletion and greenhouse gas reductions. Install HVAC and refrigeration and fire suppression equipment shall comply with 5.508.1.1 and 5.508.1.2.	
5.508.1.1 Chlorofluorocarbons (CFCs) Install HVAC, refrigeration and fire suppression equipment that do not contain CFCs.	☐
5.508.1.2 Halons Install HVAC, refrigeration and fire suppression equipment that do not contain Halons.	☐

LPAS
2484 Natomas Park Drive Suite 100 Sacramento CA 95833
916 443 0335 lpasdesign.com Architecture + Design

ORGANIC FARM CLASSROOMS INCREMENT 1

INDIAN VALLEY CAMPUS
COLLEGE OF MARIN

NOVATO, CA

FILE NUMBER: 21-C1
IDENTIFICATION STAMP
DIVISION OF THE STATE ARCHITECT
01 - 116913 INCR: 1
AC RE FLS ED SSR CD
DATE 01/12/2018

LICENSED ARCHITECTS
CURTIS A. OWYANG
C-25758
REGISTERED
DATE
STATE OF CALIFORNIA

ARCHITECT'S STAMP APPROVAL

THIS DOCUMENT CONTAINS INFORMATION THAT IS PROPRIETARY TO LPAS, INC. AND IS FURNISHED FOR THE PURPOSES OF REVIEW, BIDDING OR CONSTRUCTION OF THE PROJECT LISTED IN THE JOB TITLE BOX ABOVE AND SHALL NOT BE USED FOR ANY OTHER PURPOSE OR RELEASED TO ANY OTHER PARTY WITHOUT THE WRITTEN CONSENT OF LPAS, INC. INFORMATION CONTAINED HEREIN IS AN INSTRUMENT OF PROFESSIONAL SERVICES AND SHALL REMAIN THE PROPERTY OF LPAS, INC. ALL RIGHTS RESERVED COPYRIGHT © 2009.

THIS DRAWING IS NOT FINAL OR TO BE USED FOR CONSTRUCTION UNTIL IT IS SIGNED BY THE ARCHITECT AND ENGINEER.

CONSULTANT

CALGREEN CHECKLIST (DSA)

PROJECT NO: 1102-0005
DATE: 11-17-2017

SHEET NO:

A0.03

CONSTRUCTION SET

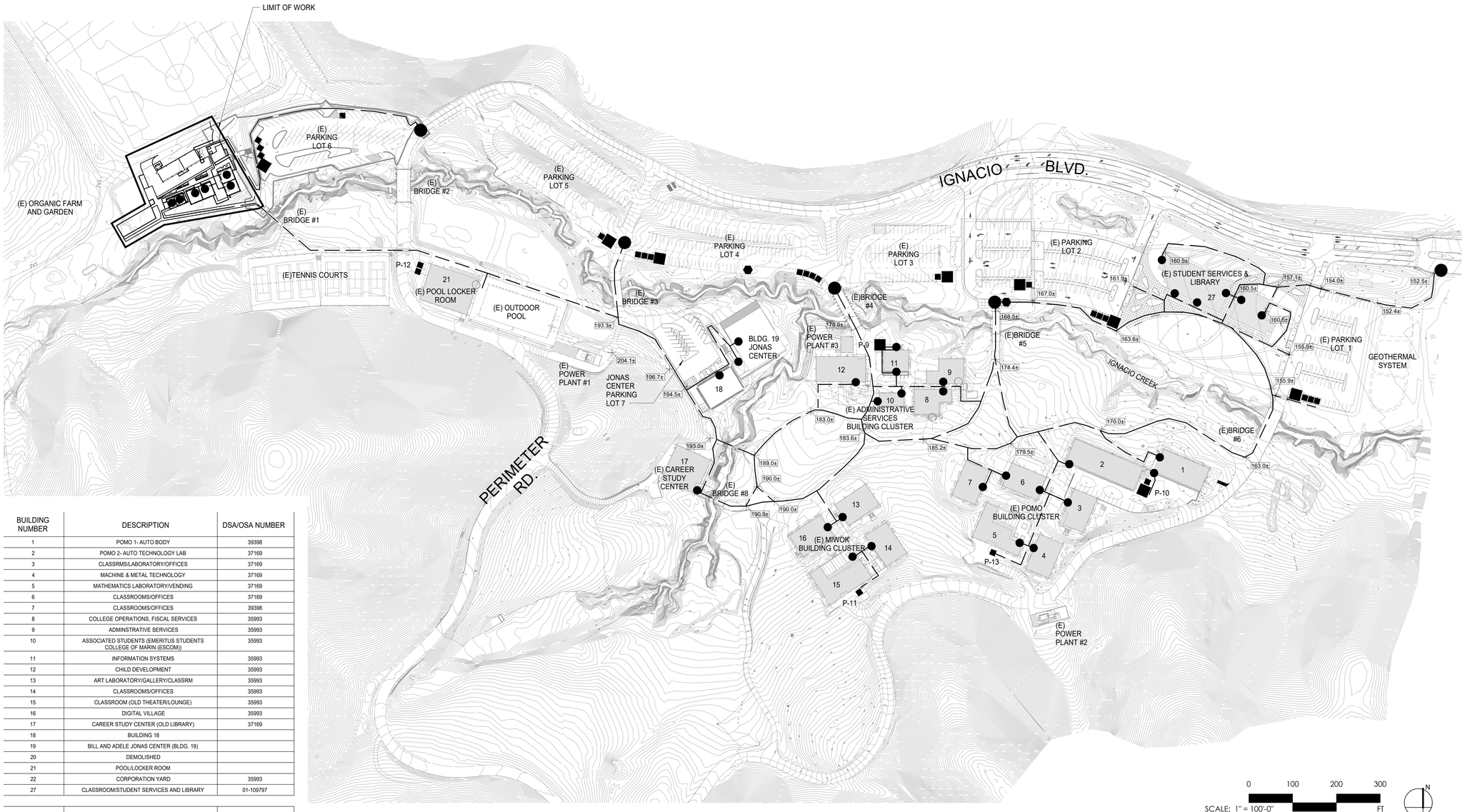

BUILDING NUMBER	DESCRIPTION	DSA/OSA NUMBER
1	POMO 1- AUTO BODY	39398
2	POMO 2- AUTO TECHNOLOGY LAB	37169
3	CLASSRMS/LABORATORY/OFFICES	37169
4	MACHINE & METAL TECHNOLOGY	37169
5	MATHEMATICS LABORATORY/VENDING	37169
6	CLASSROOMS/OFFICES	37169
7	CLASSROOMS/OFFICES	39398
8	COLLEGE OPERATIONS, FISCAL SERVICES	35993
9	ADMINSTRATIVE SERVICES	35993
10	ASSOCIATED STUDENTS (EMERITUS STUDENTS COLLEGE OF MARIN (ESCOM))	35993
11	INFORMATION SYSTEMS	35993
12	CHILD DEVELOPMENT	35993
13	ART LABORATORY/GALLERY/CLASSRM	35993
14	CLASSROOMS/OFFICES	35993
15	CLASSROOM (OLD THEATER/LOUNGE)	35993
16	DIGITAL VILLAGE	35993
17	CAREER STUDY CENTER (OLD LIBRARY)	37169
18	BUILDING 18	
19	BILL AND ADELE JONAS CENTER (BLDG. 19)	
20	DEMOLISHED	
21	POOL/LOCKER ROOM	
22	CORPORATION YARD	35993
27	CLASSROOM/STUDENT SERVICES AND LIBRARY	01-109797

DATES	DESCRIPTION / OTHER	DSA/OSA NUMBER
05/01/73	SITE 69 71013	35884
05/01/73	PERIMETER ROAD	35884
05/01/73	BRIDGE #6	35884
06/29/73	ADMINISTRATION BUILDING (AS)	35993
06/29/73	BASKETBALL & VOLLEYBALL COURTS	35993
06/29/73	COLLEGE A (OL)	35993
05/01/73	COLLEGE B (MW)	35993
06/29/73	POWERPLANT #1 PP1	35993
06/29/73	POWERPLANT #2 PP2	35993
06/29/73	POWERPLANT #3 PP3	35993
06/29/73	TENNIS COURTS (T1)	35993
07/03/73	PHASE I 71014	35993
04/08/74	SITE 73 72101	36841
11/08/74	PHASE II 72102	37169
08/23/76	PHASE III 75101-72103	39526
08/24/76	IVC PHASE IV 74081 PM7, PM BLDG. 1, IS	39398
12/05/77	MAIN ENTRANCE GATES	75077
04/25/86	STRUCTURAL RENOVATION/REPAIR PH 1	47256
01/22/87	STRUCTURAL RENOVATION/REPAIR PH 2	48011
08/24/87	STRUCTURAL RENOVATION/REPAIR PH 3	48987
11/24/87	COGEN PLANTS	49432
06/24/89	EROSION CONTROL PH 1	51009
09/22/94	AUTO LIFT INSTALLATION	61309
07/02/95	IVC ATHLETIC FIELDS CITY OF NOVATO	64855
07/01/96	AUTO SHOP HEATING SYSTEM	65312
03/24/99	AUTO BODY SHOP HEATING SYSTEM	101371
10/01/99	INFANT TODDLER CENTER	101253
10/12/99	POOL SYSTEM MODERNIZATION	102000
02/14/02	ASPHALT UPGRADES	104299
	(E) PARKING LOT 6 - ORGANIC FARM PARKING LOT IMPROVMENT	01-116739

DSA TABULATION K10

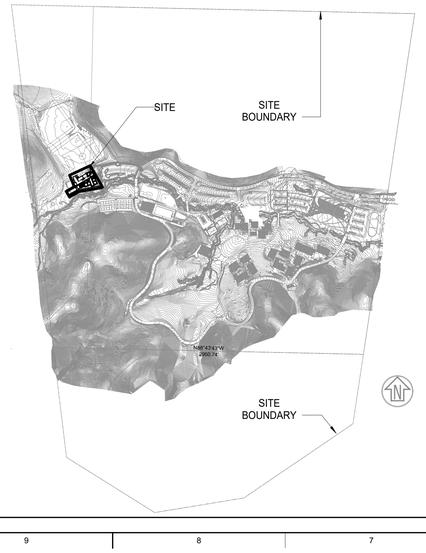

SITE BOUNDARY
SCALE: 1" = 7000' K6

NOTES:
1. PROPOSED ACCESSIBLE PATH OF TRAVEL AS INDICATED ON PLAN IS A BARRIER FREE ACCESS P.O.T. WITHOUT ANY ABRUPT LEVEL CHANGES EXCEEDING 1/2" BEVELED AT 1:2 MAX. SLOPE, OR VERTICAL LEVEL CHANGES NOT EXCEEDING 1/4" MAX. AND AT LEAST 48" WIDE. SURFACE IS SLIP RESISTANT, STABLE, FIRM, AND SMOOTH. CROSS SLOPE DOES NOT EXCEED 2% AND SLOPE IN THE DIRECTION OF TRAVEL IS LESS THAN 5% UNLESS OTHERWISE INDICATED. P.O.T. SHALL MAINTAIN FREE OF OVERHANGING OBSTRUCTIONS TO MINIMUM 80" (11B-307.4) AND PROTRUDING OBJECTS GREATER THAN 4" PROJECTION FROM WALL AND ABOVE 27" AND LESS THAN 80" (11B-307.2)

2. ALL BUILDING ENTRANCES / EXITS ALONG THE INDICATED PROPOSED PATH OF TRAVEL ARE ACCESSIBLE UNLESS OTHERWISE NOTED.

3. EXISTING ACCESSIBLE PARKING, ENTRANCES, AND PATHS OF TRAVEL ARE SHOWN ACCORDING TO INFORMATION PROVIDED BY THE COLLEGE OF MARIN.

4. (1) ACCESSIBLE VAN ELECTRIC CHARGING STATION STALL AND (1) AMBULATORY ELECTRIC CHARGING STATION STALL PROVIDED IN PARKING LOT #7. THESE STALLS ARE NOT INCLUDED IN THE CALCULATION ABOVE PER CBC 11B-208.1

LEGEND
1/8" = 1'-0" K3

LEGEND:

- CAMPUS ENTRANCE
- EXISTING DESIGNATED ACCESSIBLE PATH OF TRAVEL
- PROPOSED ACCESSIBLE PATH OF TRAVEL, 48" WIDE MIN, SLOPE <5%
- ACCESSIBLE BUILDING ENTRANCE (2% MAX SLOPE TO DOOR)
- ENTRANCE
- EXISTING ACCESSIBLE PARKING SPACE
- EXISTING ACCESSIBLE VAN PARKING SPACE
- BUS STOP
- PASSENGER DROP OFF
- 174.4± SPOT ELEVATION

LEGEND
1/8" = 1'-0" K1

SITE ACCESS PLAN
SCALE: 1" = 100'-0" K1

LPAS
2484 Natomas Park Drive Suite 100 Sacramento CA 95833
916 443 0335 lpasdesign.com Architecture + Design

ORGANIC FARM CLASSROOMS INCREMENT 1

INDIAN VALLEY CAMPUS
COLLEGE OF MARIN

NOVATO, CA

FILE NUMBER: 21-C1
IDENTIFICATION STAMP
DIVISION OF THE STATE ARCHITECT
01 - 116913 INCR: 1
AC RE FLS ED SSR CD
DATE 01/12/2018

LICENSED ARCHITECT
CURTIS A. OWANG
C27675
OWANG
DATE
STATE OF CALIFORNIA

ARCHITECT'S STAMP APPROVAL

THIS DOCUMENT CONTAINS INFORMATION THAT IS PROPRIETARY TO LPAS, INC. AND IS FURNISHED FOR THE PURPOSES OF REVIEW, BIDDING OR CONSTRUCTION OF THE PROJECT LISTED IN THE JOB TITLE BOX ABOVE AND SHALL NOT BE USED FOR ANY OTHER PURPOSE OR RELEASED TO ANY OTHER PARTY WITHOUT THE WRITTEN CONSENT OF LPAS, INC. INFORMATION CONTAINED HEREIN IS AN INSTRUMENT OF PROFESSIONAL SERVICES AND SHALL REMAIN THE PROPERTY OF LPAS, INC. ALL RIGHTS RESERVED COPYRIGHT © 2009.

THIS DRAWING IS NOT FINAL OR TO BE USED FOR CONSTRUCTION UNTIL IT IS SIGNED BY THE ARCHITECT AND ENGINEER.

CONSULTANT

OVERALL CAMPUS PLAN

PROJECT NO: 1102-0005
DATE: 11-17-2017

SHEET NO:

A0.10

CONSTRUCTION SET

CHAPTER 7A REQUIREMENTS

705A.4	ROOF GUTTERS SHALL PREVENT THE ACCUMULATION OF LEAVES AND DEBRIS IN THE GUTTER.
706A.1	VENTILATION VENTS TO ATTICS AND ROOFS SHALL PREVENT PASSAGE OF BURNING EMBERS AND FLAMES.
706A.3	VENTS SHALL NOT BE INSTALLED ON UNDERSIDE OF EAVES AND CORNICES UNLESS THEY COMPLY WITH LISTED EXCEPTIONS.
707A.3	EXTERIOR WALLS SHALL BE NON-COMBUSTIBLE OR COMPLY WITH LISTED EXCEPTIONS.
	EXCEPTION 1 - ONE LAYER 5/8" TYPE X GYPSUM SHEATHING APPLIED BEHIND THE EXTERIOR COVERING ON THE EXTERIOR SIDE OF THE FRAMING.
707A.5	ENCLOSED ROOF EAVE SOFFITS SHALL BE PROTECTED BY NON-COMBUSTIBLE MATERIAL, IGNITION RESISTANT MATERIAL, ONE LAYER 5/8" TYPE X GYPSUM SHEATHING APPLIED BEHIND EXTERIOR COVERING ON THE UNDERSIDE OF RAFTERS.
708A	EXTERIOR GLAZED WINDOWS AND EXTERIOR GLAZED DOOR ASSEMBLY SHALL BE MULTI-PANE GLAZING WITH ONE TEMPERED PANE MEETING THE REQUIREMENTS OF SECTION 2406 SAFETY GLAZING.
708A.3	EXTERIOR DOOR SURFACE OF CLADDING SHALL BE NONCOMBUSTIBLE, OR CONSTRUCTED OF SOLID CORE WOOD WITH STILES AND RAILS NOT LESS THAN 1'-3/8" THICK, OR WITH A FIRE-RESISTANCE RATING OF 20 MINUTES.
EXIT SEPARATION:	EXIT SEPARATION SHALL BE GREATER THAN 1/2 DIAGONAL
OCCUPANCY GROUP:	BUSINESS GROUP B (EDUCATIONAL OCCUPANCIES FOR STUDENTS ABOVE THE 12TH GRADE)
CONSTRUCTION TYPE:	VB
FIRE HAZARD:	PROJECT IS IN HIGH FIRE HAZARD SEVERITY PER CHAPTER 7A
LIQUEFACTION HAZARD:	PROJECT IS IN A MAPPED LIQUEFACTION ZONE PER CITY OF NOVATO. PER GEOTECHNICAL REPORT, THE POTENTIAL FOR SEISMICALLY INDUCED LIQUEFACTION IS LOW AND ANTICIPATED SETTLEMENTS ARE EXPECTED TO BE LESS THAN 1/4 INCH.
FIRE SPRINKLERS:	NONE
ALLOWABLE AREA FACTOR:	9000 SF WITHOUT HEIGHT INCREASE FOR B OCCUPANCY OR FRONTAGE INCREASE
AREA INCREASE (PER STORY):	N/A
ALLOWABLE AREA (PER BUILDING):	N/A

BUILDING AREA:

- BUILDING GROSS AREA:	
- CLASSROOM BUILDING 1:	1,930 SF
- CLASSROOM BUILDING 2:	1,930 SF
- ADMIN. BUILDING 3:	970 SF
- FARM STAND BUILDING 4:	54 SF
TOTAL GROSS AREA:	4,884 SF
- ROOF OVERHANG AREA:	1,190 SF
- SHADE AREA	2,360 SF

SHADE AREA IS EXCLUDED FROM BUILDING GROSS AREA PER 3104.1. A FIRE BARRIER IS NOT REQUIRED AT THE CONNECTION OF THE SHADE STRUCTURES TO BUILDING PER EXCEPTION UNDER 3104.5

MAXIMUM ALLOWABLE STORIES: (FROM TABLE 504.4, WITHOUT INCREASE)	2
ACTUAL NUMBER OF STORIES:	1
ALLOWABLE BUILDING HEIGHT: (FROM TABLE 504.3, WITHOUT INCREASE)	40'
ACTUAL BUILDING HEIGHT:	10'

RATING OF COMPONENTS (TABLE 601):

PRIMARY STRUCTURAL FRAME:	0
EXTERIOR LOAD- BEARING WALLS:	0
EXTERIOR NON-LOAD-BEARING WALLS/PARTITIONS:	0
INTERIOR LOAD-BEARING WALLS:	0
INTERIOR NON-LOAD-BEARING WALLS/PARTITIONS:	0
FLOORS & SECONDARY MEMBERS:	0
ROOFS & SECONDARY MEMBERS:	0
SUPPORTING STRUCTURE FOR HORIZ. ASSEMBLIES:	0

HOOD OVER COOK TOP NOT REQUIRED TO BE A TYPE 1 HOOD PER CFC 2016 SECTION 609.2 EXCEPTION.

FIRE HYDRANT REQUIREMENTS

PER CFC PART 9, APPENDIX BB, TABLE B105.1(2), FIRE FLOW CALCULATION AREA FOR TYPE V-B 4,801 - 6,200 RESULTS IN FIRE-FLOW OF 2,000 GPM; FLOW DURATION 2 HOURS.

PER CFC PART 9, APPENDIX C, TABLE, C1.02.1, MINIMUM NUMBER OF FIRE HYDRANTS IS 2, AVERAGE SPACING IS 200', MAXIMUM DISTANCE FROM ANY POINT ON STREET OR ROAD FRONTAGE TO A HYDRANT IS 225 FEET.

CODE ANALYSIS D1

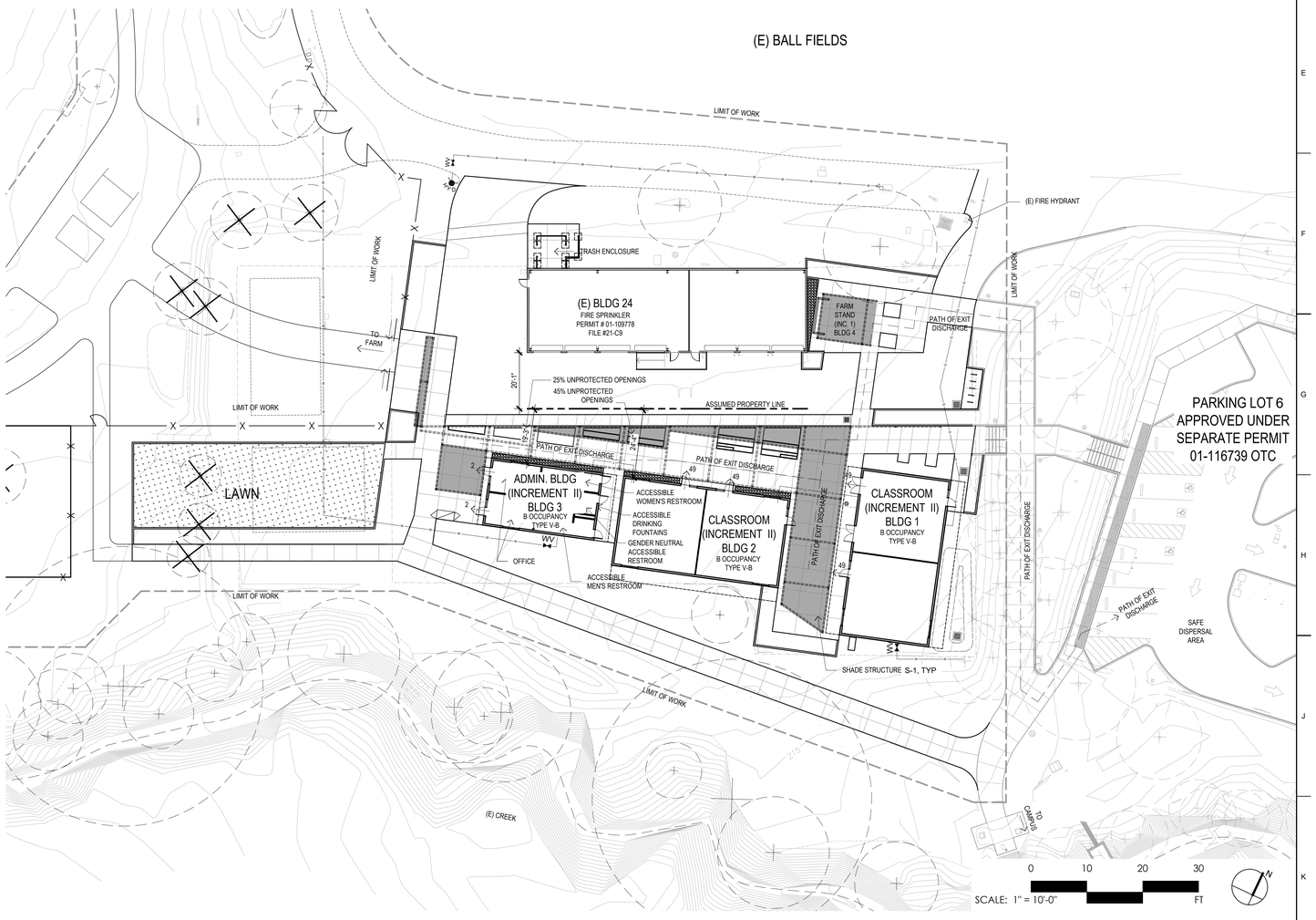

ORGANIC FARM_CLASSROOM SITE PLAN 1"=20'-0" K1

LPAS

2484 Natomas Park Drive Suite 100 Sacramento CA 95833
916 443 0335 lpasdesign.com Architecture + Design

ORGANIC FARM CLASSROOMS INCREMENT 1

INDIAN VALLEY CAMPUS
COLLEGE OF MARIN

NOVATO, CA

FILE NUMBER: 21-C1
IDENTIFICATION STAMP
DIVISION OF THE STATE ARCHITECT
01 - 116913 INCR: 1
AC RE FLS ED SSR CD
DATE 01/12/2018

LICENSED ARCHITECT
CURTIS A. OWYANG
RENEWAL 08/31/2019
STATE OF CALIFORNIA

ARCHITECT'S STAMP APPROVAL

THIS DOCUMENT CONTAINS INFORMATION THAT IS PROPRIETARY TO LPAS, INC. AND IS FURNISHED FOR THE PURPOSES OF REVIEW, BIDDING OR CONSTRUCTION OF THE PROJECT LISTED IN THE JOB TITLE BOX ABOVE AND SHALL NOT BE USED FOR ANY OTHER PURPOSE OR RELEASED TO ANY OTHER PARTY WITHOUT THE WRITTEN CONSENT OF LPAS, INC. INFORMATION CONTAINED HEREIN IS AN INSTRUMENT OF PROFESSIONAL SERVICES AND SHALL REMAIN THE PROPERTY OF LPAS, INC. ALL RIGHTS RESERVED COPYRIGHT © 2009.

THIS DRAWING IS NOT FINAL OR TO BE USED FOR CONSTRUCTION UNTIL IT IS SIGNED BY THE ARCHITECT AND ENGINEER.

CONSULTANT

CODE AND SITE ANALYSIS

PROJECT NO: 1102-0005
DATE: 11-17-2017

SHEET NO:

A0.20

CONSTRUCTION SET

DSA 810

LOCAL FIRE AUTHORITY REVIEW

To facilitate the Division of the State Architect's (DSA) approval of the Fire/Life Safety portion of a project, DSA requires Local Fire Authority (LFA) review of certain elements as identified in this form. Use of this form is mandatory for projects that add square footage to a campus or if any item on this form is relevant to the project. For additional information, see DSA 810 Instructions and DSA Policy 09-01.

PROJECT INFORMATION

School District/Owner: MARIN COMMUNITY COLLEGE DISTRICT

Project Name/School: COLLEGE OF MARIN INDIAN VALLEY CAMPUS ORGANIC FARM CLASSROOMS

Project Address: 1800 IGNACIO BLVD., NOVATO, CA 94949

LOCAL FIRE AUTHORITY (LFA)

LFA Agency Name: Novato Fire District

LFA Reviewer Name: Lori Jessell | Title: Deputy Fire Marshall

Email: ljessell@novatofire.org | Telephone Number: 415 878-2622

I have reviewed and responded to the applicable items for this project as listed below.

***Note:** Only sign this form when it is imaged onto the site plan. A loose form is not acceptable to DSA.*

LFA Reviewer's Signature: Lori Jessell **Date:** 1/8/18

Review Key: **"Y"** = Complies with LFA requirements **"N"** = Not approved (complete Section 8) **"NA"** = Not applicable to the project **"NR"** = LFA elects not to review

	Description	Y	N	NA	NR
1	Where an elevator does not meet medical emergency service cab size, per the California Building Code (CBC), use of stairways for emergency rescue and patient transport is acceptable.			X	
2	Access roads, fire lane markings, pavers and gate entrances are in accordance with Title 19, California Code of Regulations and the California Fire Code, Chapter 5.	X			
3	Fire hydrant location and distribution complies with the California Fire Code (or see # 4).	X			
4	Fire hydrant location and distribution complies with NFPA 1142, "Alternate Means." If "NR" is checked, DSA can only approve on-site water storage as an alternate. The signature of the school district official is required to acknowledge the use of alternate means.			X	
	Signature of School District Official: [signature] **Date:** 1/10/18				
	Print the School District Official's Name: GREG Nelson				
5	The location(s) of the proposed post indicator valve and fire department connection meet the requirements of this jurisdiction.		X		
6	The location(s) of the detector check valve assembly meet the requirements of this jurisdiction.	X			
7	Is the project located in a hazard severity zone area? (CBC, Chapter 7A, Section 701A.) ☒ Yes ☐ No Check type if "Yes": ☐ Moderate ☒ High ☐ Very High ☐ WIFA (If one of these boxes is checked, the project design must meet the requirements of Chapter 7A.)				
8	COMMENTS (note deficiencies): * Fire Sprinklers required for all New buildings existing building on site is Sprinklered.				

DSA 810 (rev 05-12-14) DIVISION OF THE STATE ARCHITECT | DEPARTMENT OF GENERAL SERVICES | Page 1 of 1 STATE OF CALIFORNIA

LOCAL FIRE AUTHORITY REVIEW D10

FIRE SPINKLERS ARE NOT PROVIDED ON THIS PROJECT
FIRE SPRINKLERS ARE NOT REQUIRED PER CODE
FIRE HYDRANTS HAVE BEEN PROVIDED PER CODE
LOCAL BUILDING ORDINANCES DO NOT APPLY TO COMMUNITY COLLEGES PER TITLE 19 CALIFORNIA CODE OF REGULATIONS, DIVISION 1, CHAPTER 1, SUBCHAPTER 1, SECTION 1.07

NOTES

1. A DROP-OFF IS NOT INCLUDED IN THIS SCOPE OF WORK.
2. PATH OF TRAVEL (P.O.T.): ARCHITECT HAS SURVEYED/INSPECTED THE PATH OF TRAVEL AS INDICATED ON THE PLANS AND HAS FOUND IT TO BE, OR HAS INDICATED ON THE PLANS REMEDIAL WORK WHICH WOULD CAUSE IT TO BE A BARRIER-FREE ACCESSIBLE ROUTE:
   - AT LEAST 48" IN WIDTH, OR AS APPROVED BY CODE.
   - WITHOUT ABRUPT LEVEL CHANGES EXCEEDING 1/2" IF BEVELED AT 1:2 MAX. SLOPE, OR VERT. LEVEL CHANGES EXCEEDING 1/4"
   - WITH A FIRM, STABLE, AND SLIP RESISTANT WALKING SURFACE
   - WITH A RUNNING SLOPE OF 1:20 OR LESS, UNLESS OTHERWISE INDICATED, AND A CROSS SLOPE OF 1:50 OR LESS
   - IS FREE OF OVERHEAD OBSTRUCTIONS WITHIN 80" ABOVE THE WALKING SURFACE, AND
   - IS FREE OF OBJECTS WHICH PROTRUDE MORE THAN 4" BETWEEN THE HEIGHTS OF 27" AND 80" ABOVE THE WALKING SURFACE
3. THE PATH OF TRAVEL (P.O.T.) IDENTIFIED IN THESE CONSTRUCTION DOCUMENTS IS COMPLIANT WITH THE CURRENT APPLICABLE CALIFORNIA BUILDING CODE ACCESSIBILITY PROVISIONS FOR PATH OF TRAVEL REQUIREMENTS FOR ALTERATIONS, ADDITIONS AND STRUCTURAL REPAIRS. AS PART OF THE DESIGN OF THIS PROJECT, THE POT WAS EXAMINED AND ANY ELEMENTS, COMPONENTS OR PORTIONS OF THE POT THAT WERE DETERMINED TO BE NON-COMPLIANT 1) HAVE BEEN IDENTIFIED AND 2) THE CORRECTIVE WORK NECESSARY TO BRING THEM INTO COMPLIANCE HAVE BEEN INCLUDED WITHIN THE SCOPE OF THIS PROJECT'S WORK THROUGH DETAILS, DRAWINGS AND SPECIFICATIONS INCORPORATED INTO THESE CONSTRUCTION DOCUMENTS. ANY NON-COMPLIANT ELEMENTS, COMPONENTS OR PORTIONS OF THE POT THAT WILL NOT BE CORRECTED BY THIS PROJECT BASED ON VALUATION THRESHOLD LIMITATIONS OR A FINDING OF UNREASONABLE HARDSHIP ARE SO INDICATED IN THESE CONSTRUCTION DOCUMENTS.
DURING CONSTRUCTION, IF POT ITEMS WITHIN THE SCOPE OF THE PROJECT REPRESENTED AS CODE COMPLIANT ARE FOUND TO BE NON-CONFORMING BEYOND REASONABLE CONSTRUCTION TOLERANCES, THEY SHALL BE BROUGHT INTO COMPLIANCE WITH THE CBC AS A PART OF THIS PROJECT BY MEANS OF A CONSTRUCTION CHANGE DOCUMENT.

ACCESSIBLITY NOTES C4

●●●●● PATH OF TRAVEL (P.O.T.)
CROSS SLOPE SHALL NOT EXCEED 2%.
SEE NOTES D1 ON THIS SHEET

FIRE TRUCK TURNING RADIUS, 34'-50'

LEGEND C1

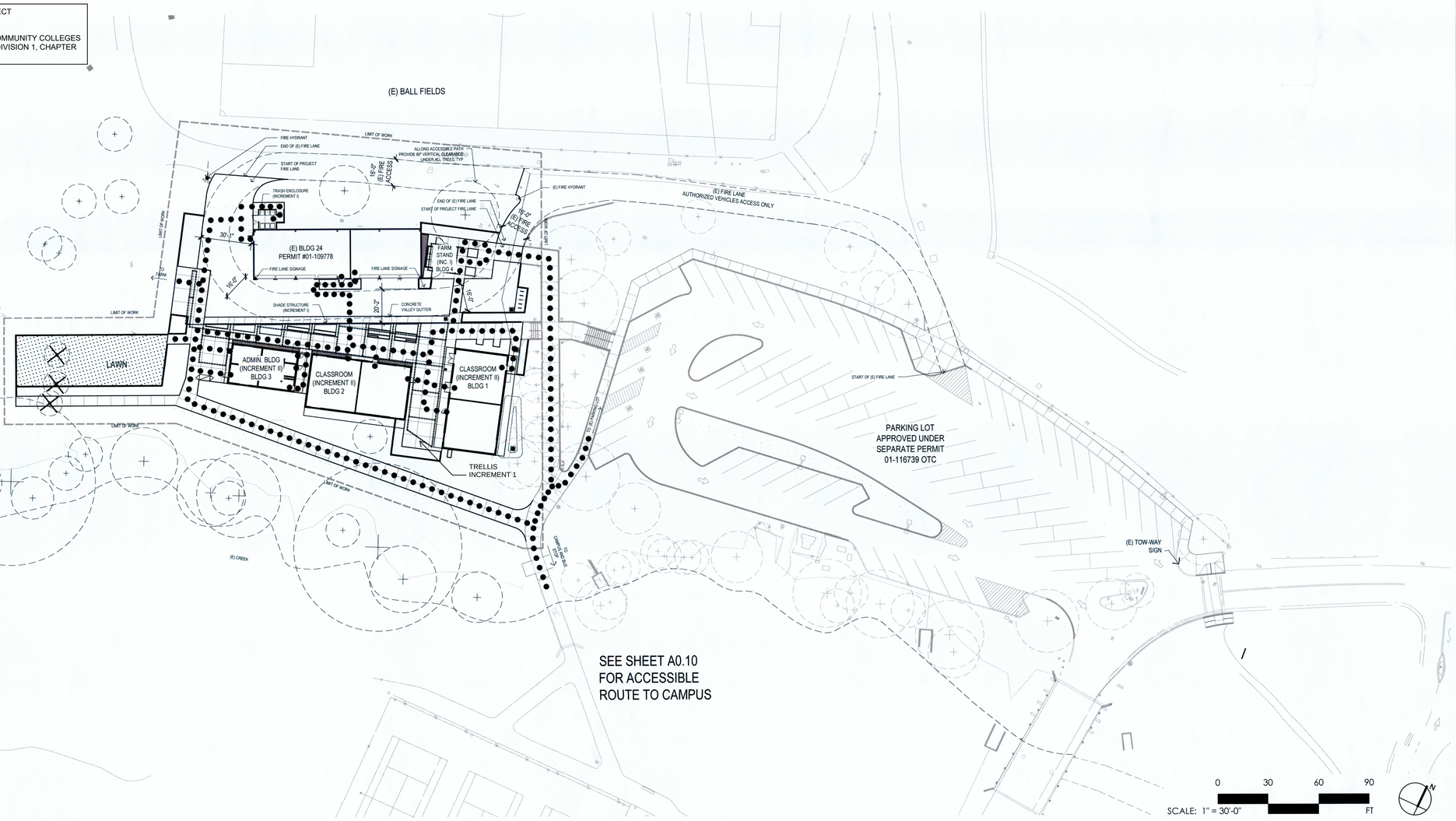

ORGANIC FARM_CLASSROOM SITE PLAN
SCALE: 1"=30'-0" K1

LPAS

2484 Natomas Park Drive Suite 100 Sacramento CA 95833
916 443 0335 lpasdesign.com **Architecture + Design**

ORGANIC FARM CLASSROOMS INCREMENT 1

INDIAN VALLEY CAMPUS
COLLEGE OF MARIN

NOVATO, CA

FILE NUMBER: 21-C1
IDENTIFICATION STAMP
DIVISION OF THE STATE ARCHITECT
01 - 116913 INCR: 1
AC RE FLS ED SSR CD
DATE 01/12/2018

LICENSED ARCHITECT — BRIAN D. SWANK — RENEWAL DATE — STATE OF CALIFORNIA

ARCHITECT'S STAMP APPROVAL

THIS DOCUMENT CONTAINS INFORMATION THAT IS PROPRIETARY TO LPAS, INC. AND IS FURNISHED FOR THE PURPOSES OF REVIEW, BIDDING OR CONSTRUCTION OF THE PROJECT LISTED IN THE JOB TITLE BOX ABOVE AND SHALL NOT BE USED FOR ANY OTHER PURPOSE OR RELEASED TO ANY OTHER PARTY WITHOUT THE WRITTEN CONSENT OF LPAS, INC. INFORMATION CONTAINED HEREIN IS AN INSTRUMENT OF PROFESSIONAL SERVICES AND SHALL REMAIN THE PROPERTY OF LPAS, INC. ALL RIGHTS RESERVED COPYRIGHT © 2009.

THIS DRAWING IS NOT FINAL OR TO BE USED FOR CONSTRUCTION UNTIL IT IS SIGNED BY THE ARCHITECT AND ENGINEER.

CONSULTANT

SITE ACCESSIBILITY PLAN

PROJECT NO: 1102-0005
DATE: 11-17-2017

SHEET NO:

A0.30

CONSTRUCTION SET

GENERAL DEMOLITION NOTES

1. THE TOPOGRAPHY SHOWN DOES NOT DEPICT ALL EXISTING IMPROVEMENTS BELOW GRADE WITHIN THE INTERIOR OF THE PROJECT AREA. PRIOR TO DEMOLITION, CONTRACTOR MUST FIELD VERIFY ALL EXISTING CONDITIONS WITHIN LIMITS OF WORK, BOTH ABOVE AND BELOW GRADE.
2. REMOVAL OF LANDSCAPING SHALL INCLUDE ROOTS AND ORGANIC MATERIALS.
3. THE CONTRACTOR SHALL BE RESPONSIBLE FOR OBTAINING ANY AND ALL PERMITS AND SHALL PAY ALL FEES NECESSARY FOR ENCROACHMENT, GRADING, DEMOLITION AND DISPOSAL OF SAID MATERIALS AS REQUIRED BY PRIVATE, LOCAL AND STATE JURISDICTIONS.
4. THE CONTRACTOR SHALL BE RESPONSIBLE FOR A SITE INSPECTION TO FULLY ACKNOWLEDGE THE EXTENT OF THE DEMOLITION WORK.
5. DAMAGE TO ANY EXISTING UTILITIES AND SERVICES TO REMAIN SHALL BE THE RESPONSIBILITY OF THE CONTRACTOR. CONTRACTOR SHALL REPAIR AND/OR REPLACE IN KIND.
6. EROSION CONTROL MEASURES SHALL BE IMPLEMENTED TO PREVENT DEBRIS AND UNSUITABLE MATERIALS FROM ENTERING STORM DRAINS, SANITARY SEWERS AND STREETS.
7. DUST CONTROL SHALL BE IMPLEMENTED DURING DEMOLITION.
8. DEMOLITION IS LIMITED TO WITHIN DEMOLITION LIMIT LINE UNLESS NOTED OTHERWISE.
9. CONTRACTOR TO CONFIRM EXISTING CONDITIONS PRIOR TO COMMENCEMENT OF WORK AS SITE CONDITIONS MAY HAVE CHANGED. IT IS THE CONTRACTORS RESPONSIBILITY TO BRING TO THE ATTENTION OF THE OWNER OF ANY ITEMS THAT VARY FROM THESE PLANS.
10. CONTRACTOR TO CONFIRM DEMOLITION PLAN AND SCHEDULE WITH OWNER PRIOR TO IMPLEMENTATION.
11. ALL UTILITIES SHOWN ARE FOR GRAPHIC PURPOSES ONLY, VERIFY EXACT LOCATIONS AND SIZES IN FIELD.

DEMOLITION KEYNOTES

1	REMOVE (E) AC AND AB
2	REMOVE (E) CHAIN LINK FENCE
3	RELOCATE (E) GREEN HOUSE AND ACCESSORIES. NEW LOCATION T.B.D.
4	RELOCATE (E) SHADE STRUCTURE. NEW LOCATION T.B.D.
5	REMOVE (E) CONCRETE WALL AND FLATWORK
6	REMOVE (E) AIR COMPRESSOR AND DRYER. SALVAGE TO OWNER.
7	REMOVE (E) 1" WATER LINE
8	ABANDON (E) STORAGE TANK. GROUT PIPE INLET. BACKFILL HOLE.
9	REROUTE (E) IRRIGATION LINE AS NECESSARY TO AVOID NEW MODULAR BUILDINGS.
10	REMOVE (E) LIGHT POLE. SALVAGE TO OWNER.

Graphic Scale (in feet)
20 0 20 40
1 inch = 20 ft.

LIMIT OF DEMOLITION LINE

(E) BUILDING 24 TO REMAIN

(E) ACCESS ROAD

PARKING LOT 6 (ORGANIC FARM PHASE 1)

RELOCATED SEA CRATE

REMOVE (E) GAS METER AND ELECTRIC PANEL AND RETURN TO OWNER.

RELOCATED SEA CRATE

COLLEGE STOCK PILE TO BE RELOCATED

(E) CREEK

(E) 5.5%

(E)1.0%

(E)0.6%

LPAS

2484 Natomas Park Drive Suite 100 Sacramento CA 95833
916 443 0335 lpasdesign.com Architecture + Design

ORGANIC FARM CLASSROOMS INCREMENT 1

INDIAN VALLEY CAMPUS
COLLEGE OF MARIN

NOVATO, CA

NO. ISSUE DATE

FILE NUMBER: 21.C1

IDENTIFICATION STAMP
DIVISION OF THE STATE ARCHITECT
01 - 116913 INCR: 1
AC RE FLS ED SSR CD
DATE 01/12/2018

REGISTERED PROFESSIONAL ENGINEER
KIRK S. BOMTZ
No. 74631
CIVIL
STATE OF CALIFORNIA

ARCHITECT'S STAMP

THIS DOCUMENT CONTAINS INFORMATION THAT IS PROPRIETARY TO LPAS, INC. AND IS FURNISHED FOR THE PURPOSES OF REVIEW, BIDDING OR CONSTRUCTION OF THE PROJECT LISTED IN THE JOB TITLE BOX ABOVE AND SHALL NOT BE USED FOR ANY OTHER PURPOSE OR RELEASED TO ANY OTHER PARTY WITHOUT THE WRITTEN CONSENT OF LPAS, INC. INFORMATION CONTAINED HEREIN IS AN INSTRUMENT OF PROFESSIONAL SERVICES AND SHALL REMAIN THE PROPERTY OF LPAS, INC. ALL RIGHTS RESERVED COPYRIGHT © 2009.

THIS DRAWING IS NOT FINAL OR TO BE USED FOR CONSTRUCTION UNTIL IT IS SIGNED BY THE ARCHITECT AND ENGINEER.

CONSULTANT

CSW | ST2

CSW/Stuber-Stroeh Engineering Group, Inc.
45 Leveroni Court Novato, CA 94949
tel: 415.883.9850 fax: 415.883.9835
Civil & Structural Engineers
Surveying & Mapping
Environmental Planning
Land Planning
Construction Management
http://www.cswst2.com

© 2013

PROJECT NO: 1102-0005
DATE: 11.17.17

SITE DEMO PLAN

SHEET NO:

C1.00

CONSTRUCTION SET

P:\0411\08034\DWG\Shet_D\drawings\PHASE 2\C1.0 Demo Plan.dwg 12/04/2017 - 12:22 PM bowtk 1:1

STORM DRAIN STRUCTURE TABLE

DI #1	24"X24" PRECAST, W/ TRAFFIC RATED GRATE. GRATE=218.02, 6" INV. OUT=216.80
DI #2	24"X24" PRECAST, W/ TRAFFIC RATED GRATE. GRATE=217.50, 6" INV. OUT=216.50
DI #3	24"X24" PRECAST, W/ CHECKER PLATED COVER. RIM=217.50, 6" INV. OUT=216.39
DI #4	30"X30" PRECAST, W/ PEDESTRIAN RATED GRATE. GRATE=216.33, 6" INV. OUT=213.3
CB #1	6"X20" ZURN CATCH BASIN, GRATE=218.60, 4" INV. OUT=217.6

KEYNOTES

1. CONCRETE CURB SEE DETAIL 3, SHEET C4.O
2. CONCRETE WALKWAY. SEE DETAIL 2, SHEET C4.O
3. CONCRETE VALLEY GUTTER. SEE DETAIL 6, SHEET C4.0
4. GRATE SHALL BE 1/2" MAC OPENING; LONG DIRECTION PERPENDICULAR TO DOMINANT DIRECTION OF TRAVEL

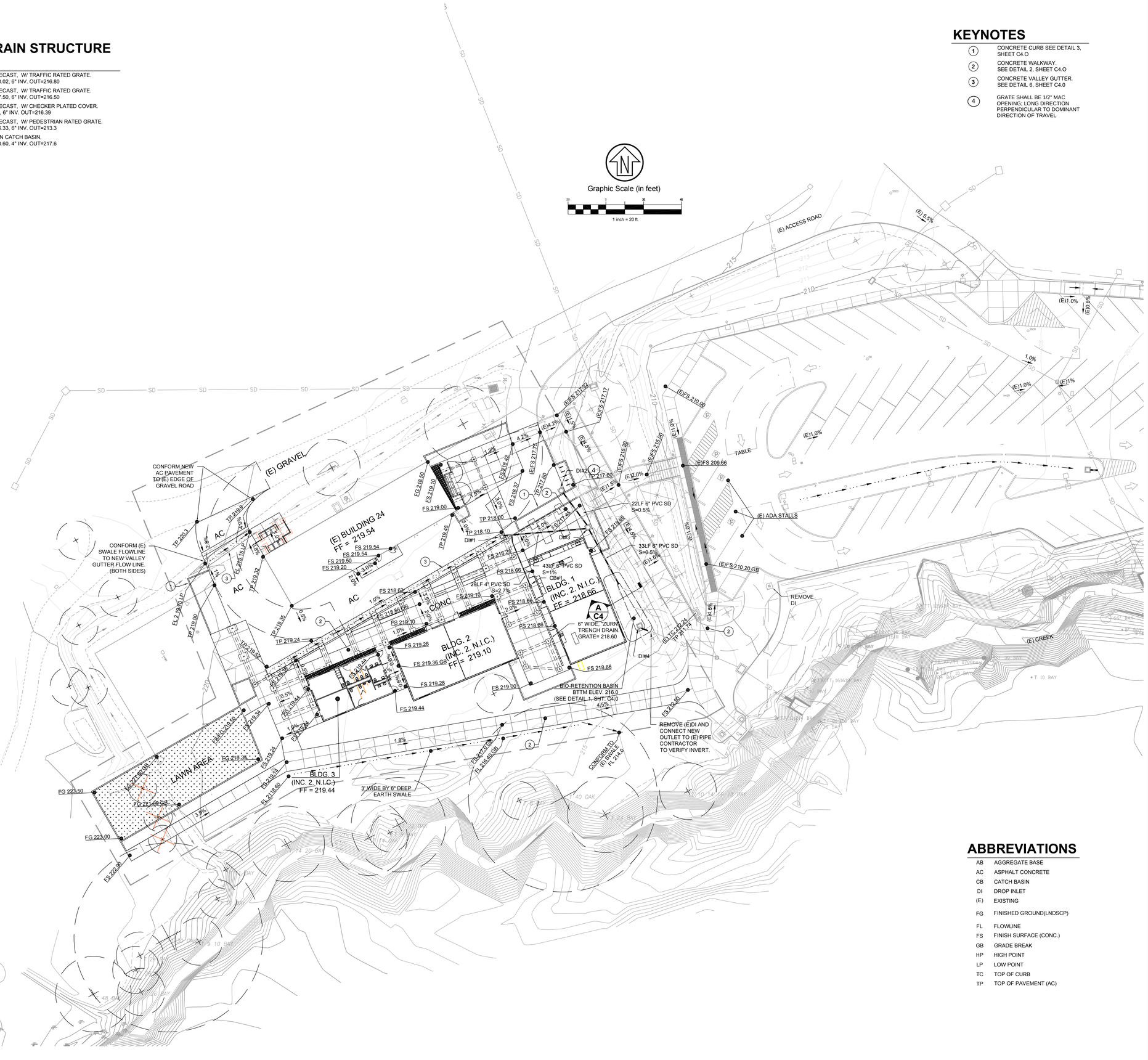

ABBREVIATIONS

AB	AGGREGATE BASE
AC	ASPHALT CONCRETE
CB	CATCH BASIN
DI	DROP INLET
(E)	EXISTING
FG	FINISHED GROUND(LNDSCP)
FL	FLOWLINE
FS	FINISH SURFACE (CONC.)
GB	GRADE BREAK
HP	HIGH POINT
LP	LOW POINT
TC	TOP OF CURB
TP	TOP OF PAVEMENT (AC)

LPAS

2484 Natomas Park Drive Suite 100 Sacramento CA 95833
916 443 0335 lpasdesign.com Architecture + Design

ORGANIC FARM CLASSROOMS INCREMENT 1

INDIAN VALLEY CAMPUS
COLLEGE OF MARIN

NOVATO, CA

NO. ISSUE DATE

FILE NUMBER: 21-C1
IDENTIFICATION STAMP
DIVISION OF THE STATE ARCHITECT
01 - 116913 INCR: 1
AC RE FLS ED SSR CD
DATE 01/12/2018

REGISTERED PROFESSIONAL ENGINEER
KIRK S. BOVITZ
No. 74631
CIVIL
STATE OF CALIFORNIA

ARCHITECT'S STAMP

IDENTIFICATION STAMP
DIV. OF THE STATE ARCHITECT
OFFICE OF REGULATION SERVICES
AC ____ FLS ____ SS ____
DATE ____

APPROVAL

THIS DOCUMENT CONTAINS INFORMATION THAT IS PROPRIETARY TO LPAS, INC. AND IS FURNISHED FOR THE PURPOSES OF REVIEW, BIDDING OR CONSTRUCTION OF THE PROJECT LISTED IN THE JOB TITLE BOX ABOVE AND SHALL NOT BE USED FOR ANY OTHER PURPOSE OR RELEASED TO ANY OTHER PARTY WITHOUT THE WRITTEN CONSENT OF LPAS, INC. INFORMATION CONTAINED HEREIN IS AN INSTRUMENT OF PROFESSIONAL SERVICES AND SHALL REMAIN THE PROPERTY OF LPAS, INC. ALL RIGHTS RESERVED COPYRIGHT © 2009.

THIS DRAWING IS NOT FINAL OR TO BE USED FOR CONSTRUCTION UNTIL IT IS SIGNED BY THE ARCHITECT AND ENGINEER.

CONSULTANT

CSW | ST2

CSW/Stuber-Stroeh Engineering Group, Inc.

45 Leveroni Court tel: 415.883.9850
Novato, CA 94949 fax: 415.883.9835

Civil & Structural Engineers
Surveying & Mapping
Environmental Planning
Land Planning
Construction Management

http://www.cswst2.com © 2013

PROJECT NO: 1102-0005

DATE: 11.17.17

GRADING AND DRAINAGE PLAN

SHEET NO:

C2.00

CONSTRUCTION SET

P:\04410803\4DWG\Sheet_Drawings\PHASE 2\C2.0 Grading Plan.dwg 12/04/2017 - 12:19 PM bovks 1:1

UTILITY NOTES

1. ALL WORK TO CONFORM WITH CITY OF NOVATO, MARIN UCS, NORTH MARIN MUNICIPAL WATER DISTRICT, AND NOVATO SANITARY DISTRICT STANDARD DRAWINGS AND SPECIFICATIONS.
2. THE LOCATION, SIZES AND/OR DEPTHS OF EXISTING UNDERGROUND UTILITIES SHOWN ON THIS PLAN ARE FROM VARIOUS SOURCES OF RELIABILITY. THE CONTRACTOR SHALL VERIFY LOCATION AND DEPTH OF EXISTING UTILITY PRIOR TO ANY EXCAVATION .
3. REMOVED UTILITIES SHALL BE CAPPED AT THE POINT OF CONNECTION OF THE UTILITY TO REMAIN.
4. ALL MANHOLES AND DRAINAGE INLETS TO BE FLUSH WITH FINISHED SURFACE.
5. SANITARY SEWER CLEANOUT INVERTS FOR BUILDINGS SHALL BE SET AT 3.5 FEET BELOW FINISHED FLOOR UNLESS SPECIFIED OTHERWISE..

LINETYPES

EXISTING		PROPOSED
E	ELECTRICAL LINE	E
G	GAS LINE	G
IRR	IRRIGATION	N/A
L	LIGHTING	N/A
SD	STORM DRAIN	
SS	SANITARY SEWER	SS
TEL	TELEPHONE LINE	T
W	WATER	W
	REMOVE UTILITY	

Underground Fire Service General Notes:

NFPA 24 (2016) Sec.10.6.2.5 After installation, rods, nuts, bolts, washers, clamps, and other restraining devices shall be cleaned and thoroughly coated with a asphalt or other acceptable corrosion-retarding material after installation.

NFPA 24 (2016) Sec. 10.10.2.1.1 Underground piping from the water supply to the system riser, and lead-in connections to the system riser shall be completely flushed before the connection is made to downstream fire protection system piping to remove foreign materials that might have entered the main during the course of the installation and run until water runs clear. Witnessed by the DSA Project Inspector.

NFPA 24 (2016) Sec. 10.10.2.2.1 All piping and attached appurtenances subjected to system working pressure shall be hydrostatically tested at 200 psi pressure and maintained for a minimum of two hours. Witnessed by the DSA Project Inspector.

Hydrostatic tests should be made before the joints are covered so that any leaks may be readily detected.

NFPA 24 (2016) Sec.10.4.2.2. The depth of cover over water pipes shall be not less than 2 ½ ft. to prevent mechanical damage and shall be buried a minimum of 3 ft. over driveways Sec. 10.4.2.2.2.

NFPA 24 (2016) Sec.10.6.1.4 Whenever possible, thrust blocks shall be placed so that the joints are accessible for repair.

NFPA 24 (2016) Sec 10.10.1 The installing contractor shall be responsible for completing and signing the Contractor's Material and Test Certificate(s) shown in figure10.10.1 This form shall be given to the Project Inspector and School District.

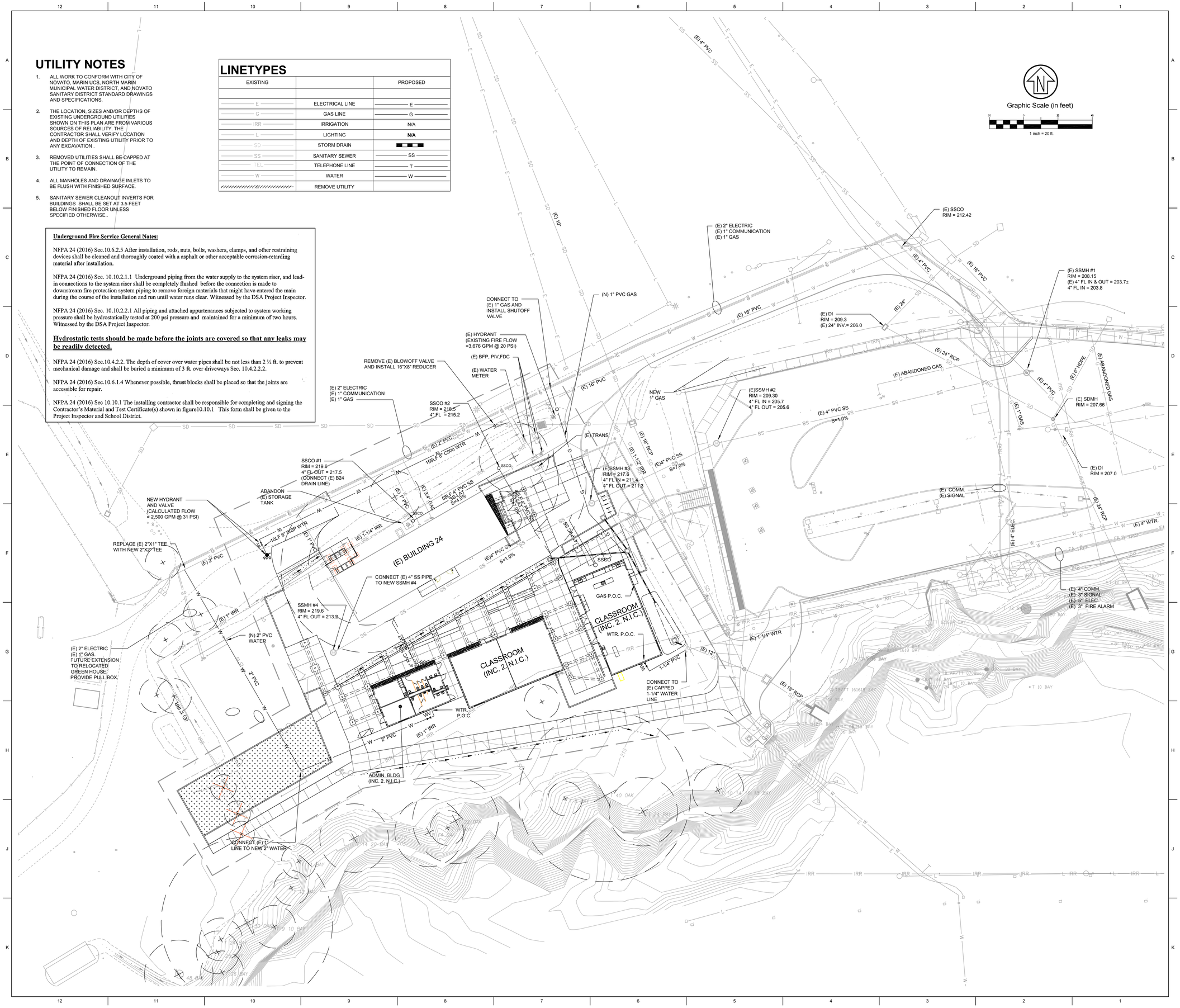

LPAS

2484 Natomas Park Drive Suite 100 Sacramento CA 95833
916 443 0335 lpasdesign.com Architecture + Design

ORGANIC FARM CLASSROOMS INCREMENT 1

INDIAN VALLEY CAMPUS
COLLEGE OF MARIN

NOVATO, CA

NO.	ISSUE	DATE

FILE NUMBER: 21-C1

IDENTIFICATION STAMP
DIVISION OF THE STATE ARCHITECT
01 - 116913 INCR: 1
AC RE FLS ED SSR CD
DATE 01/12/2018

KIRK S. BOMTJE
No. 74531
REGISTERED PROFESSIONAL ENGINEER
CIVIL
STATE OF CALIFORNIA

IDENTIFICATION STAMP
DIV. OF THE STATE ARCHITECT
OFFICE OF REGULATION SERVICES
AC____ FLS ____ SS____
DATE ____

ARCHITECT'S STAMP APPROVAL

THIS DOCUMENT CONTAINS INFORMATION THAT IS PROPRIETARY TO LPAS, INC. AND IS FURNISHED FOR THE PURPOSES OF REVIEW, BIDDING OR CONSTRUCTION OF THE PROJECT LISTED IN THE JOB TITLE BOX ABOVE AND SHALL NOT BE USED FOR ANY OTHER PURPOSE OR RELEASED TO ANY OTHER PARTY WITHOUT THE WRITTEN CONSENT OF LPAS, INC. INFORMATION CONTAINED HEREIN IS AN INSTRUMENT OF PROFESSIONAL SERVICES AND SHALL REMAIN THE PROPERTY OF LPAS, INC. ALL RIGHTS RESERVED COPYRIGHT © 2009.

THIS DRAWING IS NOT FINAL OR TO BE USED FOR CONSTRUCTION UNTIL IT IS SIGNED BY THE ARCHITECT AND ENGINEER.

CONSULTANT

CSW/Stuber-Stroeh Engineering Group, Inc.
45 Leveroni Court tel: 415.883.9850
Novato, CA 94949 fax: 415.883.9835

Civil & Structural Engineers
Surveying & Mapping
Environmental Planning
Land Planning
Construction Management

http://www.csw2.com

© 2013

PROJECT NO: 1102-0005
DATE: 11.17.17

UTILITY PLAN

SHEET NO:

C3.00

CONSTRUCTION SET

P:\0441\0834\CWO\Sheet_Drawings\PHASE 2\C3.0 Utility Plan.dwg 01/08/2018 - 02:51 PM bcreis 1:1

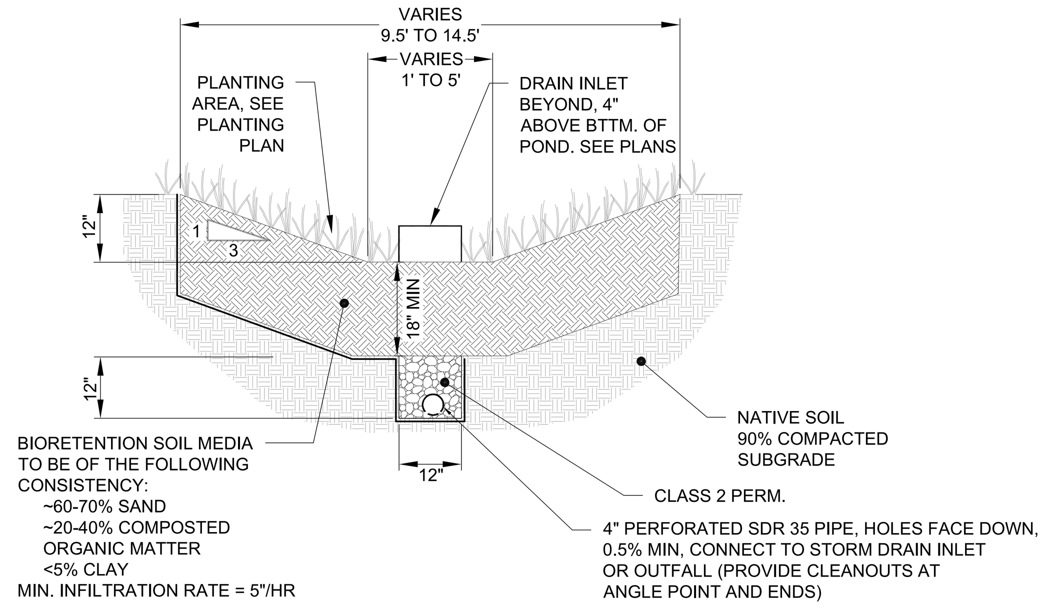

1 BIORETENTION AREA DETAIL
SCALE: 1" = 1'

BIORETENTION AREA CONSTRUCTION NOTES:

1. SCARIFY SUBGRADE BEFORE INSTALLING BIORETENTION AREA AGGREGATE AND BIORETNETION SOIL MEDIA.
2. INSTALL UNDERDRAIN WITH HOLES FACING DOWN. UNDERDRAIN DISCHARGE ELEVATION SHALL BE NEAR BOTTOM OF AGGREGATE LAYER.COMPACT EACH 6" LIFT OF BIORETENTION SOIL MEDIA WITH LANDSCAPE ROLLER OR BY LIGHTLY WETTING. IF WETTING, LET DRY OVERNIGHT BEFORE PLANTING.
3. NEVER WORK WITHIN BIORETENTION AREA LIMITS DURING RAIN OR UNDER WET CONDITIONS.
4. KEEP ALL HEAVY MACHINERY OUTSIDE BIORETENTION AREA LIMITS.
5. CONTRACTOR SHALL PROVIDE SUBMITTALS CERTIFYING CLASS 2 PERM MEETS CALTRANS SPECIFICATION 68-2.02F(3) AND BIORETENTION SOIL MEET REQUIREMENTS OF BASMAA POST-CONSTRUCTION MANUAL.
6. CONTRACTOR SHALL NOTIFY CIVIL ENGINEER 48 HOURS PRIOR TO INSTALLATION OF CLASS 2 PERM AND BIORETENTION SOIL FOR INSPECTION.

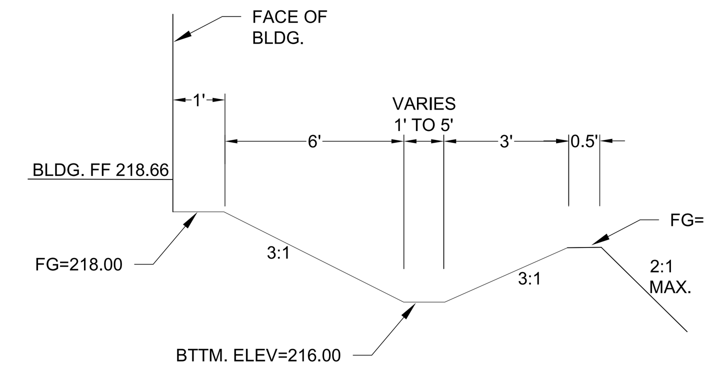

A SECTION
SCALE: 1" = 2'

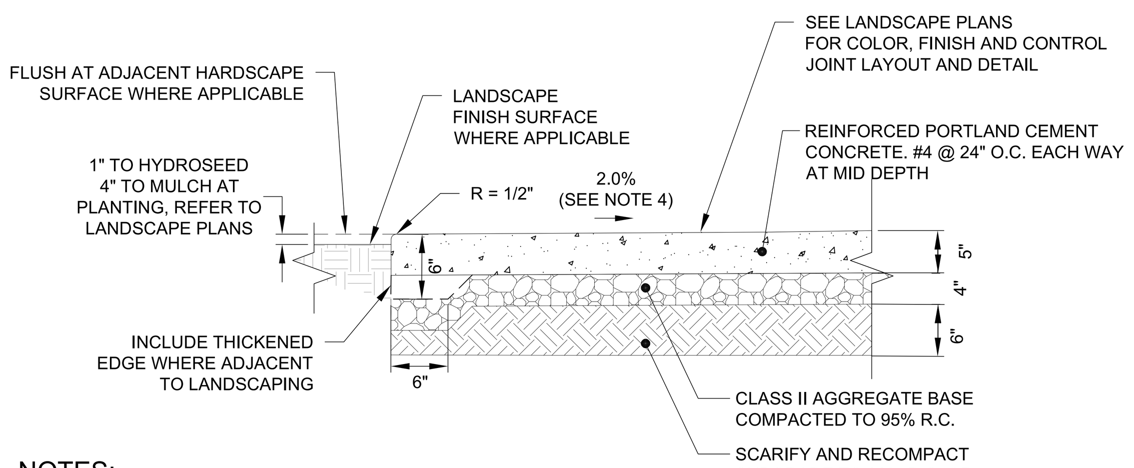

NOTES:

1. ALL TREAD SURFACES SHALL BE SLIP RESISTANT.
2. REFER TO PROJECT LANDSCAPING PLANS FOR COLOR, PATTERN, TEXTURE, FINISH, AND LOCATION OF JOINTS.
3. REFER TO GEOTECHNICAL REPORT FOR SUBGRADE PREPARATION.
4. SEE PLAN FOR DIRECTION OF CROSS SLOPE.

2 PEDESTRIAN CONCRETE SECTION
SCALE: 1" = 1'

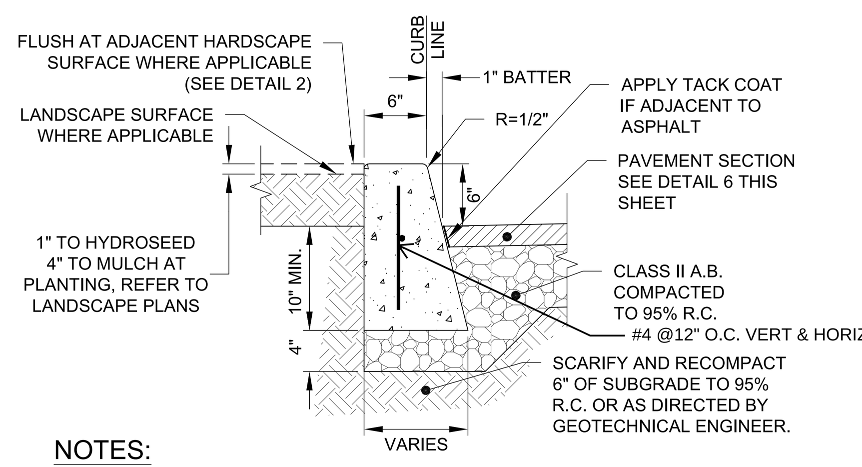

NOTES:

1. WHERE CONCRETE WALK IS ADJACENT TO CURB, PROVIDE DOWELED ISOLATION JOINT BETWEEN WALK AND BACK OF CURB.
2. WHERE WALK IS ADJACENT TO CURB, THE JOINTS OF THE CURB SHALL ALIGN WITH THE JOINTS IN THE ADJACENT PAVING, SEE LANDSCAPE PLANS.
3. SEE LANDSCAPE PLANS FOR TYPICAL JOINT DETAILS.

3 STANDARD CONCRETE CURB
SCALE: 1" = 1'

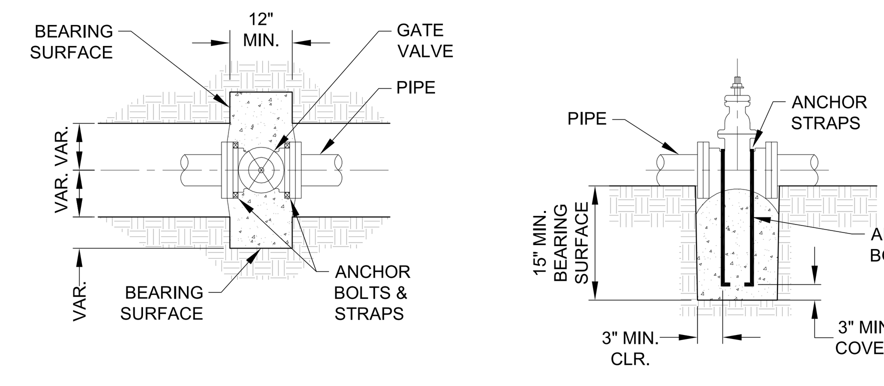

PLAN

ELEVATION

VALVE ANCHORS

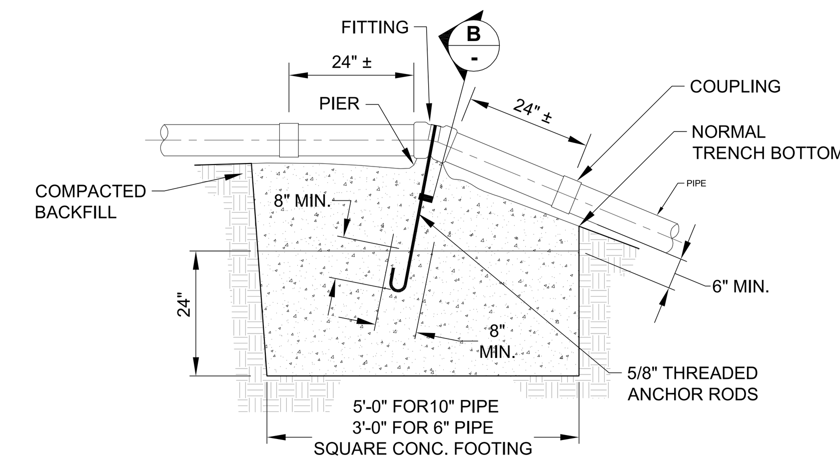

VERTICAL BEND

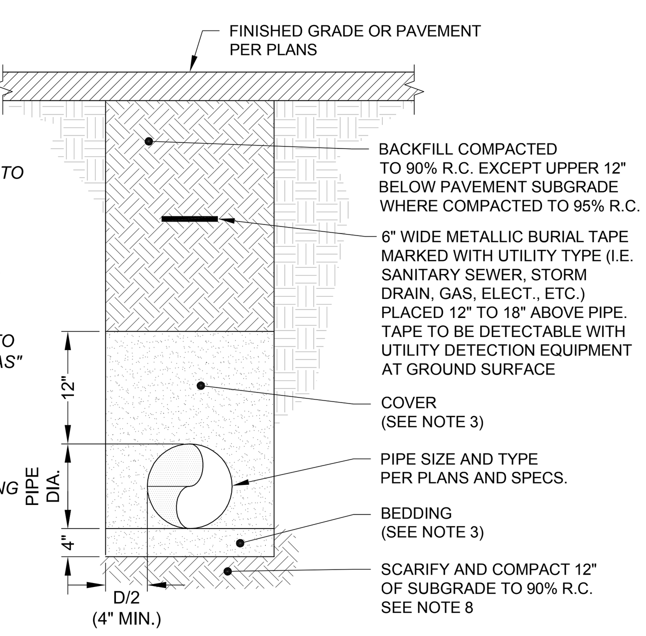

NOTES:

1. *UTILITY TRENCH CONSTRUCTION SHALL CONFORM TO THE RECOMMENDATIONS OF THE GEOTECHNICAL REPORT.*
2. *EXCAVATE FOR BELLS OR HUBS SO FULL LOAD IS CARRIED BY PIPE BARRELS.*
3. *BEDDING AND COVER: SAND OR FINE GRAVEL WITH LESS THAN 10% FINES.*
4. *BEDDING SHALL BE PLACED IN A MANNER SUCH AS SLICING, SHOVEL-SPADING, OR SHOVEL RODDING TO ENSURE COMPLETE FILLING OF THE "HAUNCH AREAS" BELOW THE PIPE. JETTING IS NOT PERMITTED*
5. *SUBGRADE TO BE FREE OF PROTRUDING OBJECTS.*
6. *BACKFILL MAY BE NATIVE SOIL THAT MEETS THE CRITERIA FOR FILL AS DESCRIBED IN THE GEOTECHNICAL REPORT.*
7. *WHERE LESS THAN 18" BETWEEN BOTTOM OF PAVING SECTION (I.E. BOTTOM OF A.B.) AND TOP OF PIPE, BACKFILL TO BE CONTROLLED DENSITY FILL (CDF)*
8. *TRENCH SUBGRADE SHALL BE PREPARED IN ACCORDANCE WITH THE GEOTECHNICAL REPORT.*

4 PIPE TRENCH DETAIL
SCALE: 1" = 1'

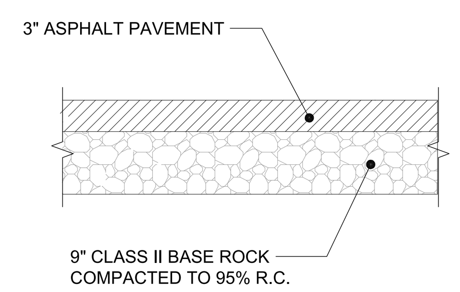

NOTES:

1. PAVEMENT SECTION BASED ON A T.I. OF 5.5 AND AN R-VALUE OF 5.
2. REFER TO PROJECT GEOTECHNICAL REPORT FOR SUBGRADE PREPARATION AND OTHER REQUIREMENTS.

5 STANDARD ASPHALT PAVEMENT SECTION
SCALE: 1" = 1'

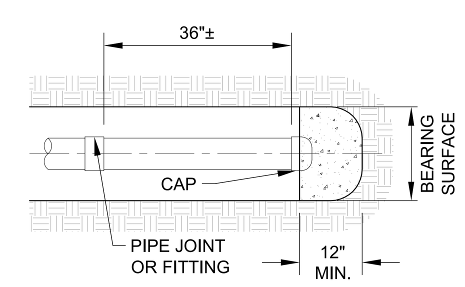

CAPPED END

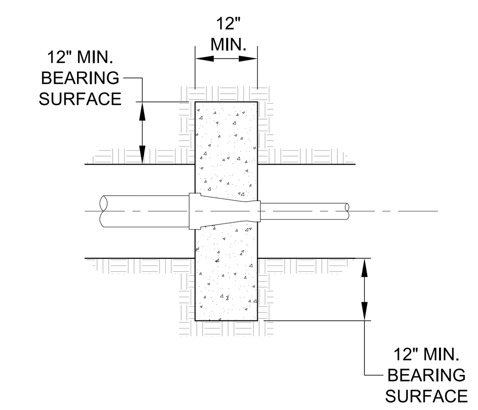

REDUCER

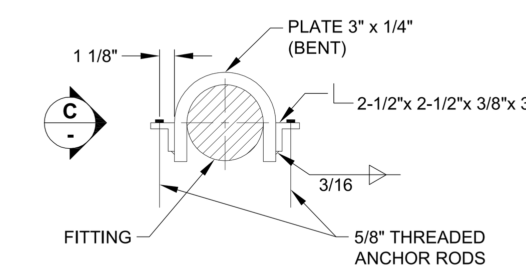

B SECTION
SCALE: NTS

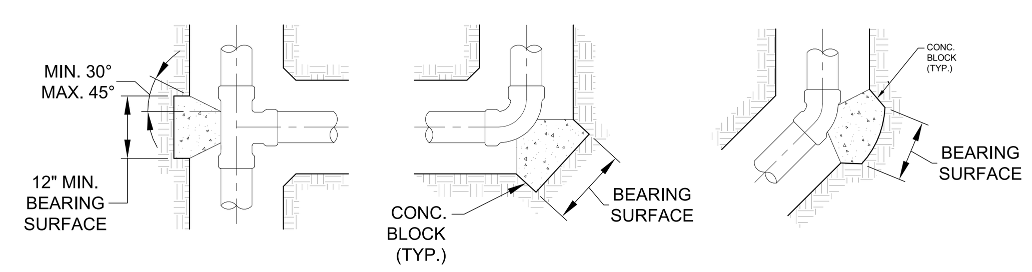

TEE

90° ELBOW

45° ELBOW

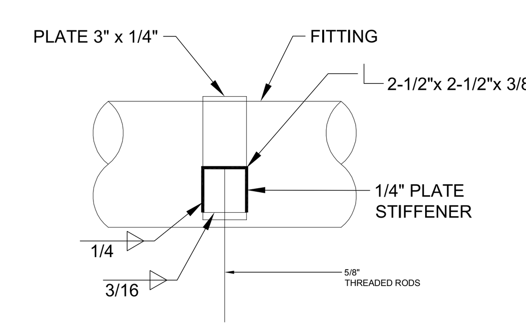

C SECTION
SCALE: NTS

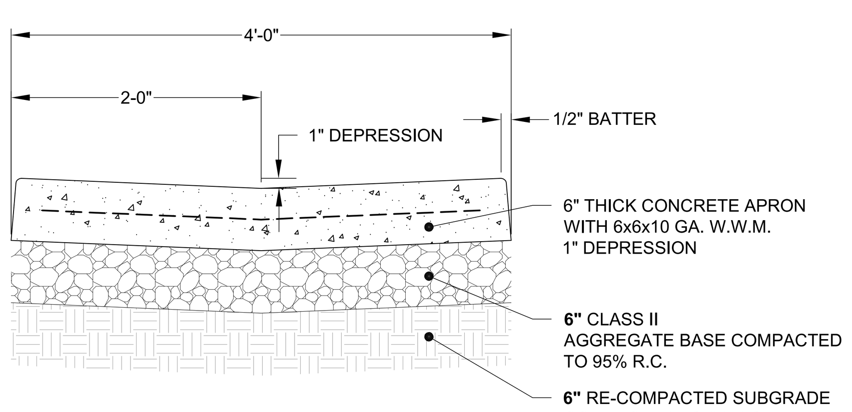

NOTES:

1. CONCRETE SHALL BE CLASS "B" (5 SACK) WITH 1" AGGREGATE.
2. NO CONCRETE SHALL BE PLACED PRIOR TO FORM INSPECTION.
3. ASPHALT CONCRETE SHALL BE 1/4" HIGH AT EDGE OF CONCRETE.
4. CONTROL JOINTS SHALL BE PLACED AT 8' INTERVALS.
5. EXPANSION JOINTS SHALL BE PLACED AT 16' INTERVALS.

6 VALLEY GUTTER DETAIL
SCALE: 1" = 1'

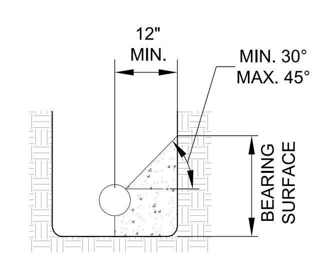

TYPICAL SECTION
OF THRUST BLOCK

THRUST BLOCK BEARING AREAS - S.F.

MAIN SIZE	TEE *	BEND 90°	BEND 45°	BEND 22.5°	BEND 11.25°
4"	3	4	2	2	2
6"	6	8	5	3	2
8"	10	14	8	4	2
10"	15	21	11	6	3
12"	21	29	16	8	4

* INCLUDES TEES, PLUGS, CAPS, HYDRANTS & VALVES

GENERAL NOTES:

1. THRUST BLOCKS TO BE CONSTRUCTED PER N.F.P.A. 24.
2. ALL THRUST/ANCHOR BLOCKS SHALL BEAR AGAINST UNDISTURBED SOIL.
3. CONCRETE SHALL ATTAIN A MINIMUM COMPRESSIVE STRENGTH OF 3000 PSI.
4. ALL ANCHOR RODS AND ANCHOR BOLTS SHALL BE MINIMUM 5/8" DIA. & ANCHOR STRAPS SHALL BE 3" X 1/4".
5. THRUST BLOCK DESIGN IS BASED ON A WATER PRESSURE OF 200 P.S.I. AND A MINIMUM ALLOWABLE SOIL BEARING VALUE OF 2,000 P.S.F. THE CONTRACTOR SHALL BE RESPONSIBLE FOR VERIFYING SOIL BEARING VALUES AND THE POSITION AND SIZE OF BEARING AREAS BASED UPON N.F.P.A. 24.
6. THE HEIGHT OF THE BLOCK MUST BE LESS THAN HALF OF THE TOTAL DEPTH TO THE BOTTOM OF THE BLOCK.
7. THE RATIO OF WIDTH TO HEIGHT OF THRUST BLOCK SHALL NOT EXCEED 1.5 TO 1.

7 THRUST AND ANCHOR BLOCK DETAIL
SCALE: 1" = 2'

LPAS

2484 Natomas Park Drive Suite 100 Sacramento CA 95833
916 443 0335 lpasdesign.com **Architecture + Design**

ORGANIC FARM CLASSROOMS INCREMENT 1

INDIAN VALLEY CAMPUS
COLLEGE OF MARIN

NOVATO, CA

NO.	ISSUE	DATE

FILE NUMBER: 21-C1
IDENTIFICATION STAMP
DIVISION OF THE STATE ARCHITECT
01 - 116913 INCR: 1
AC RE FLS ED SSR CD
DATE 01/12/2018

ARCHITECT'S STAMP

THIS DOCUMENT CONTAINS INFORMATION THAT IS PROPRIETARY TO LPAS, INC. AND IS FURNISHED FOR THE PURPOSES OF REVIEW, BIDDING OR CONSTRUCTION OF THE PROJECT LISTED IN THE JOB TITLE BOX ABOVE AND SHALL NOT BE USED FOR ANY OTHER PURPOSE OR RELEASED TO ANY OTHER PARTY WITHOUT THE WRITTEN CONSENT OF LPAS, INC. INFORMATION CONTAINED HEREIN IS AN INSTRUMENT OF PROFESSIONAL SERVICES AND SHALL REMAIN THE PROPERTY OF LPAS, INC. ALL RIGHTS RESERVED COPYRIGHT © 2009.

THIS DRAWING IS NOT FINAL OR TO BE USED FOR CONSTRUCTION UNTIL IT IS SIGNED BY THE ARCHITECT AND ENGINEER.

CONSULTANT

CSW | ST2

CSW/Stuber-Stroeh Engineering Group, Inc.
45 Leveroni Court tel: 415.883.9850
Novato, CA 94949 fax: 415.883.9835
Civil & Structural Engineers
Surveying & Mapping
Environmental Planning
Land Planning
Construction Management
http://www.cswst2.com © 2013

PROJECT NO: 1102-0005
DATE: 11.17.17

CIVIL DETAILS

SHEET NO:
C4.00

CONSTRUCTION SET

P:\04\4108034\DWG\Sheet_Drawings\PHASE 2\C4.0 Civil Details.dwg 01/09/2018 - 09:33 AM bovks 1:1.0084

CD CODES AND DESIGN CRITERIA

CD-1) PERFORM ALL CONSTRUCTION IN CONFORMANCE WITH THE BUILDING AND DESIGN CODES REFERENCED WITHIN THESE DOCUMENTS. THE PROJECT DOCUMENTS REFER TO THE FOLLOWING CODES AND STANDARDS, UON:

2016 CALIFORNIA BUILDING CODE (CBC) WITH DSA/SS AMENDMENTS

CD-2) RISK CATEGORY: III SCHOOL

CD-3) LIVE LOADS:
ROOFS — 20 LBS./SQ. FT. [UNREDUCED]

CD-5) WIND LOAD DESIGN DATA:
MAIN WIND FORCE RESISTING SYSTEM
BASIC WIND SPEED, V — 110 MPH
EXPOSURE — C
RISK/OCCUPANCY CATEGORY — II

CD-6) SEISMIC LOAD DESIGN DATA:
SEISMIC IMPORTANCE FACTOR (Ie) — 1.25
Ss — 1.50 g
S1 — 0.60 g
SDS — 1.00 g
SD1 — 0.6 g
SITE CLASS — D
SEISMIC DESIGN CATEGORY — D
LATERAL SYSTEM DESCRIPTION — CANTILEVER COLUMN (OMF DETAILING)
SEISMIC RESPONSE COEFFICIENT (Cs) — 1.00
RESPONSE MODIFICATION FACTOR (R) — 1.25
ANALYSIS PROCEDURE DESCRIPTION — EQUIVALENT LATERAL FORCE

FN FOUNDATIONS

FN-1) THE FOUNDATION DESIGN IS BASED ON THE GEOTECHNICAL INVESTIGATION REPORT BY TERRACON, DATED 6/9/2017. TERRACON PROJECT #ND165141A

FN-2) FOUNDATIONS HAVE BEEN DESIGNED BASED ON THE FOLLOWING DESIGN VALUES FROM THE GEOTECHNICAL INVESTIGATION REPORT:

ALLOWABLE BEARING CAPACITY: 2,500PSF

SEE GEOTECHNICAL REPORT FOR ADDITIONAL REQUIREMENTS AND INFORMATION. DESIGN VALUES SHALL BE FIELD VERIFIED BY QUALIFIED GEOTECHNICAL CONSULTANT RETAINED BY THE OWNER .

FN-3) THE CONTRACTOR SHALL VERIFY FOUNDATION INSTALLATION AND CONSTRUCTION IS IN CONFORMANCE WITH THE RECOMMENDATIONS OUTLINED IN THE GEOTECHNICAL REPORT.

FN-4) CONTRACTOR SHALL BE RESPONSIBLE TO ADEQUATELY PROTECT ALL EXCAVATION. WHERE NECESSARY, SHEET AND SHORE THE EXCAVATION WITH ALL REQUIRED TIEBACKS AND BRACING AS DETERMINED BY CONTRACTOR'S STRUCTURAL ENGINEER.

CM CONCRETE MATERIALS

CM-1) CONCRETE STRENGTHS AND WEIGHT (SEE SPECIFICATION SECTION 03 30 00 FOR ADDITIONAL CONCRETE PROPERTIES):

LOCATION	MIN COMPRESSIVE STRENGTH (PSI)	MAX WEIGHT (PCF)	MIN/MAX % CLASS F FLY ASH	MIN/MAX % SLAG	MAX TOTAL % FLY ASH AND SLAG
FOOTINGS / GRADE BEAMS	3000 @ 56 DAYS	145	20-50	0-60	60
SLAB ON GRADE	3000 @ 28 DAYS	145	15-25	0-30	40

CM-2) ALL CONCRETE SHALL BE THOROUGHLY CONSOLIDATED.

CM-3) THE USE OF CALCIUM CHLORIDE AND OTHER CHLORIDE CONTAINING AGENTS IS PROHIBITED. THE USE OF RECYCLED CONCRETE IS PROHIBITED. PLACEMENT WITHIN AND CONTACT BETWEEN ALUMINUM ITEMS, INCLUDING ALUMINUM CONDUIT, AND CONCRETE IS PROHIBITED.

RE CONCRETE REINFORCEMENT

RE-1) ALL CONCRETE SHALL INCLUDE REINFORCEMENT. IF REINFORCEMENT IS NOT SPECIFICALLY INDICATED ON THE DRAWINGS, VERIFY WITH THE STRUCTURAL ENGINEER BEFORE PROCEEDING WITH WORK.

RE-2) REINFORCEMENT SHALL CONFORM TO THE FOLLOWING STANDARDS AND MATERIAL PROPERTIES:

DEFORMED BARS: ASTM A615, GRADE 60, UON
WELDABLE DEFORMED BARS: ASTM A706, GRADE 60, UON

RE-3) DETAIL REINFORCEMENT BASED ON THE PROJECT REQUIREMENTS, ACI-318 AND ACI-315, UON.

RE-4) WHERE A 90-DEG, 135 -DEG OR 180-DEG HOOK IS GRAPHICALLY INDICATED, PROVIDE CORRESPONDING ACI STANDARD HOOKS, UON.

RE-5) DOWELS SHALL MATCH SIZE AND SPACING OF MAIN REINFORCEMENT, UON.

RE-6) REINFORCEMENT SHALL HAVE CONCRETE PROTECTION (CLEAR COVER) PER ACI 318 UNLESS OTHERWISE INDICATED ON THE DRAWINGS.

LOCATION	COVER
CONCRETE CAST AGAINST AND PERMANENTLY EXPOSED TO EARTH	3"
CONCRETE EXPOSED TO EARTH OR WEATHER:	
NO 5 BARS OR SMALLER	1 1/2"
NO 6 BARS AND LARGER	2"
CONCRETE NOT EXPOSED TO WEATHER OR IN CONTACT WITH GROUND SLABS, WALLS, JOISTS:	
NO 11 BARS OR SMALLER	3/4"
NO 14 BARS AND LARGER	1 1/2"

RE-7) LAP REINFORCEMENT AS SPECIFICALLY DETAILED ON THE DRAWINGS. SEE REBAR OFFSET AND LAP SPLICE SCHEDULE, ON SHEET S2.01

RE-8) UNLESS OTHERWISE NOTED ALL LAP SPLICES ARE TO BE CLASS "B" SPLICES PER REBAR OFFSET AND LAP SPLICE SCHEDULE, ON SHEET S2.01

RE-9) PROVIDE MECHANICAL SPLICES FOR BARS LARGER THAN #11 OR WHERE INDICATED.
PROVIDE TENSILE, PRE-QUALIFIED, WELDED OR THREADED MECHANICAL SPLICES UON.

RE-11) PROVIDE LAP LOCATIONS AS FOLLOWS, UON:

A. GRADE BEAM / WALL (TOP HORIZONTAL REINFORCEMENT): AT CENTER OF SPAN
B. GRADE BEAM / WALL (BOTTOM HORIZONTAL REINFORCEMENT): AT SUPPORTS
C. UNLESS OTHERWISE NOTED TERMINATE BARS AT DISCONTINUOUS ENDS WITH STANDARD HOOKS

RE-12) TERMINATION OF REINFORCEMENT, UON:

A. TERMINATE ALL BARS IN LAPS, 90 DEGREE BENDS, OR WITH DOWELS INTO EXISTING CONCRETE.

B. BEND TOP MAT OR FOOTING BARS DOWN TO BOTTOM BARS AT ENDS.

C. BEND BOTTOM MAT OR FOOTING BARS UP WITH STANDARD 90 DEGREE BENDS.

D. PROVIDE DOWELS FROM FOOTINGS AND SLABS INTO WALLS AND COLUMNS TO MATCH SIZE AND SPACING OF VERTICAL REINFORCEMENT.

SS STRUCTURAL STEEL

SS-1) STEEL MATERIALS:

SHAPE	MATERIAL
WIDE FLANGES & WT'S	ASTM A992, GRADE 50
MISCELLANEOUS PLATES	ASTM A36
CONTINUITY PLATES	ASTM A572, GRADE 50
ANGLES & CHANNELS	ASTM A36
RECTANGULAR HSS (TUBES)	ASTM A500, GRADE B
BOLTS	ASTM A325 N, UON
ANCHOR RODS	ASTM F1554, Fy=36ksi, UON
THREADED RODS	ASTM A36
WELDING ELECTRODES	E70, SEE SPECIFICATIONS FOR CVN REQUIREMENTS

SS-2) WHERE NO CAMBER IS INDICATED, FABRICATE BEAMS SO THAT ANY NATURAL CAMBER IS UPWARD AFTER ERECTION.

SS-3) SPLICES SHALL BE ALLOWED ONLY AT LOCATIONS SPECIFICALLY INDICATED ON THE STRUCTURAL DRAWINGS UNLESS APPROVED OTHERWISE BY THE SER IN WRITING.

SS-4) FOR STEEL MEMBERS AND EMBEDMENTS EXPOSED TO WEATHER, PROVIDE HOT-DIPPED GALVANIZED FINISH.

SS-5) PROVIDE HOLES IN ALL STEEL AS REQUIRED TO PREVENT ANY ACCUMULATION OF WATER. ALL PENETRATIONS THROUGH MAIN MEMBERS SHALL NOT EXCEED 1 1/8"Ø AND SHALL BE GROUND SMOOTH. THESE DRAINS MUST BE KEPT CLEAN AND OPEN.

SS-6) SHOW ALL COPES, HOLES, OPENINGS AND MODIFICATIONS REQUIRED IN STRUCTURAL STEEL MEMBERS FOR ERECTION OR THE WORK OF OTHER TRADES ON THE SHOP DRAWINGS FOR APPROVAL BY THE ARCHITECT AND STRUCTURAL ENGINEER.

SS-7) FIELD MODIFICATION OF STRUCTURAL STEEL IS PROHIBITED WITHOUT PRIOR APPROVAL OF THE ARCHITECT AND STRUCTURAL ENGINEER.

PA POST-INSTALLED ANCHORS

PA-1) POST-INSTALLED ANCHORS INCLUDE EXPANSION ANCHORS, SCREW ANCHORS, EPOXY ANCHORS/DOWELS, AND POWDER-ACTUATED FASTENERS.

PA-2) INSTALL POST-INSTALLED ANCHORS IN ACCORDANCE WITH THE APPLICABLE ICC-ES REPORT AND THE MANUFACTURER'S RECOMMENDATIONS.

PA-3) USE SCANNING EQUIPMENT OR OTHER MEANS TO LOCATE AND AVOID CUTTING OR DAMAGING REINFORCING BARS. SER APPROVAL IS REQUIRED PRIOR TO CUTTING OR DAMAGING REINFORCING.

PA-4) SPECIAL INSPECTION IS REQUIRED FOR ALL POST-INSTALLED ANCHOR INSTALLATIONS, UON.

PA-5) FIELD TESTING OF POST-INSTALLED ANCHORS IS REQUIRED, UON. TEST INSTALLED ANCHORS IN ACCORDANCE WITH THE FOLLOWING:

A. TEST 100% OF ANCHORS AT ALL STRUCTURAL APPLICATIONS, UON.
B. TEST 50% OF ANCHORS AT ALL NON-STRUCTURAL APPLICATIONS (SUCH AS EQUIPMENT ANCHORAGE), UON.
C. TEST 10% OF ANCHORS AT SILL PLATE BOLTING APPLICATIONS, UON.
D. IF ANY ANCHOR FAILS TESTING, TEST ALL ANCHORS OF THE SAME TYPE NOT PREVIOUSLY TESTED UNTIL 20 CONSECUTIVE ANCHORS PASS.
E. FIELD TESTS SHALL BE EITHER TENSION TESTS OR TORQUE TESTS, AS REQUIRED FOR THE SPECIFIC ANCHOR TYPE.
F. TENSION TESTS: APPLY TEST LOADS TO ANCHORS WITHOUT REMOVING THE NUT IF POSSIBLE. IF NOT, REMOVE NUT AND INSTALL A THREADED COUPLER TO THE SAME TIGHTNESS AS THE ORIGINAL NUT USING A TORQUE WRENCH. REACTION LOADS FROM TEST FIXTURES MAY BE APPLIED CLOSE TO THE ANCHOR BEING TESTED, PROVIDED THE ANCHOR IS NOT RESTRAINED FROM WITHDRAWING BY THE FIXTURES. TO BE ACCEPTABLE, ANCHORS SHALL HAVE NO OBSERVABLE MOVEMENT AT THE APPLICABLE TEST LOAD (OBSERVABLE MOVEMENT IS DEFINED AS THE WASHER UNDER THE NUT BECOMING LOOSE).
G. TORQUE TESTS: TO BE ACCEPTABLE, THE APPLICABLE TEST TORQUE MUST BE REACHED WITHIN ONE-HALF TURN OF THE NUT.
H. TEST EQUIPMENT IS TO BE CALIBRATED BY AN APPROVED TESTING LABORATORY IN ACCORDANCE WITH STANDARD RECOGNIZED PROCEDURES.
I. FIELD TESTING SHALL BE DONE IN THE PRESENCE OF THE PROJECT INSPECTOR.
J. TESTING SHOULD OCCUR A MINIMUM OF 24 HOURS AFTER INSTALLATION OF THE SUBJECT ANCHOR.

PA-6) EXPANSION ANCHORS

A. EXPANSION ANCHORS SHALL BE EITHER ONE OF THE FOLLOWING, UON:

HILTI KWIK BOLT TZ
(ICC-ES REPORT ESR-1917)

SIMPSON STRONG-BOLT 2
(ICC-ES REPORT ESR-3037)

USE OF CARBON STEEL EXPANSION ANCHORS IS LIMITED TO DRY, INTERIOR LOCATIONS. USE STAINLESS STEEL EXPANSION ANCHORS AT EXTERIOR, WEATHER-EXPOSED, OR DAMP LOCATIONS.

B. ANCHOR EMBEDMENTS BELOW ARE TO BE USED WHEN EXPLICITLY SPECIFIED IN THE STRUCTURAL DRAWINGS. FOR LOCATIONS WHERE TENSION TEST VALUES ARE NOT SPECIFIED IN THE DRAWINGS, CONSULT WITH THE SER.

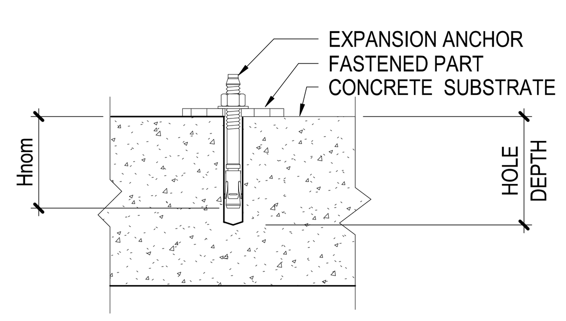

CONCRETE SLAB

HILTI KWIK BOLT TZ IN NORMAL-WEIGHT CONCRETE			
ANCHOR DIAMETER	Hnom	MINIMUM HOLE DEPTH	TORQUE TEST VALUE (FT-LBS)
3/8"	2 5/16"	2 5/8"	25
1/2"	2 3/8"	2 5/8"	40
5/8"	4 7/16"	4 3/4"	60
3/4"	5 9/16"	5 3/4"	110

SIMPSON STRONG-BOLT 2 IN NORMAL-WEIGHT CONCRETE			
ANCHOR DIAMETER	Hnom	MINIMUM HOLE DEPTH	TORQUE TEST VALUE (FT-LBS)
3/8"	1 7/8"	2"	30
1/2"	2 3/4"	3"	60
5/8"	5 1/8"	5 3/8"	90
3/4"	5 3/4"	6"	150

C. Hnom IS MEASURED FROM FACE OF CONCRETE SUBSTRATE TO THE END OF THE BOLT.
D. CONTRACTOR SHALL PROVIDE ANCHORS WITH SUFFICIENT TOTAL LENGTH FOR THE SPECIFIED EMBEDMENT LENGTH, THICKNESS OF FASTENED PART, WASHER AND NUT.

PA-9) EPOXY ANCHORS AND DOWELS

A. EPOXY SHALL BE EITHER ONE OF THE FOLLOWING, UON:

HILTI HIT-HY 200 (ICC-ES REPORT ESR-3187)

HILTI HIT-RE 500-SD (ICC-ES REPORT ESR-2322)

SIMPSON SET-XP (ICC-ES REPORT ESR-2508)

B. RODS EMBEDDED IN EPOXY SHALL BE CARBON STEEL THREADED RODS PER THE EPOXY MANUFACTURER'S ICC-ES REPORT. FOR HILTI HIT-HY 200 EPOXY, HILTI HIT-Z ANCHOR RODS MAY BE SUBSTITUTED FOR THREADED RODS AT CONTRACTOR'S OPTION.

C. REINFORCING STEEL BARS EMBEDDED IN EPOXY SHALL BE ASTM A615, GRADE 60, UON.

D. ANCHOR EMBEDMENT AND TENSION TEST VALUES BELOW ARE TO BE USED WHEN EXPLICITLY SPECIFIED IN THE STRUCTURAL DRAWINGS. FOR LOCATIONS WHERE TENSION TEST VALUES ARE NOT SPECIFIED IN THE DRAWINGS, CONSULT WITH THE SER.

EPOXY ANCHORS IN NORMAL-WEIGHT CONCRETE (3000 PSI MIN)				
REBAR SIZE	EMBEDMENT (IN)	TENSION TEST VALUE (LBS)		
		HILTI HIT-HY 200	HILTI HIT-RE 500-SD	SIMPSON SET-XP
#3	3	2900	940	1040
#4	4	5180	1670	3740
#5	5	8130	2600	5260
#6	6	11120	3750	6740
#7	7	12260	4320	8020
* LISTED EPOXY ADHESIVE MAY NOT BE USED WITH NOTED REBAR SIZES				

EPOXY ANCHORS IN NORMAL-WEIGHT CONCRETE (3000 PSI MIN)				
THREADED ROD DIAMETER (IN)	EMBEDMENT (IN)	TENSION TEST VALUE (LBS)		
		HILTI HIT-HY 200	HILTI HIT-RE 500-SD	SIMPSON SET-XP
3/8	3	2500	1230	1700
1/2	4	4480	2110	2600
5/8	5	7030	3170	3450
3/4	6	10180	4450	4440
7/8	7	11710	4720	5540

E. TESTING OF EPOXY DOWELS AT JOINTS BETWEEN NEW AND EXISTING SLABS-ON-GRADE IS NOT REQUIRED.
F. TESTING OF #3 EPOXY DOWELS AT CURBS IS NOT REQUIRED.
G. TESTING SHALL OCCUR AFTER EPOXY HAS CURED, AS PER MANUFACTURER'S RECOMMENDATIONS.
H. OVERHEAD AND/OR CONSTANT TENSION EPOXY ANCHOR INSTALLATIONS NOT SHOWN ON THE DRAWINGS SHALL NOT BE PERMITTED UNLESS EACH CONDITION IS REVIEWED AND APPROVED IN WRITTING BY SER.
I. EPOXY ANCHORS SHALL BE INSTALLED IN CONCRETE HAVING A MINIMUM AGE OF 21 DAYS AT TIME OF ANCHOR INSTALLATION.
J. INSTALLATION AND INSPECTION OF EPOXY ANCHORS SHALL COMPLY WITH ACI 318-11 APPENDIX D SECTIONS D.9.2.2 AND D.9.2.4.
K. FOR USES OF EPOXY DOWELS NOT EXPLICITLY SPECIFIED IN THE STRUCTURAL DRAWINGS, CONTACT THE SER.

PA-10) POWDER-ACTUATED FASTENERS (PAF):

A. POWDER-ACTUATED FASTENERS SHALL BE EITHER ONE OF THE FOLLOWING, UON:
HILTI X-U (ICC-ES REPORT ESR-2269) AT METAL.
HILTI X-CP72 (ICC-ES REPORT ESR-2379) AT PTDF.
SIMPSON POWER-DRIVEN FASTENERS (ICC-ES REPORT ESR-2138)
B. PROVIDE 0.08" THICK x 1.1" SQUARE OR 1.425" ROUND WASHERS FOR ALL POWDER-ACTUATED FASTENERS.
C. THE MINIMUM EMBEDMENT OF POWDER-ACTUATED FASTENERS INTO CONCRETE SHALL BE 1", UON.
D. THE EMBEDMENT OF POWDER-ACTUATED FASTENERS INTO STEEL SHALL BE THAT REQUIRED BY THE PAF MANUFACTURER, UON.
E. TESTING OF POWDER-ACTUATED FASTENERS IS NOT REQUIRED.

LPAS

2484 Natomas Park Drive Suite 100 Sacramento CA 95833
916 443 0335 lpasdesign.com Architecture + Design

ORGANIC FARM CLASSROOMS INCREMENT 1

INDIAN VALLEY CAMPUS
COLLEGE OF MARIN

NOVATO, CA

FILE NUMBER: 21-C1
IDENTIFICATION STAMP
DIVISION OF THE STATE ARCHITECT
01 - 116913 INCR: 1
AC RE FLS ED SSR CD
DATE 01/12/2018

ARCHITECT'S STAMP APPROVAL

THIS DOCUMENT CONTAINS INFORMATION THAT IS PROPRIETARY TO LPAS, INC. AND IS FURNISHED FOR THE PURPOSES OF REVIEW, BIDDING OR CONSTRUCTION OF THE PROJECT LISTED IN THE JOB TITLE BOX ABOVE

THIS DRAWING IS NOT FINAL OR TO BE USED FOR CONSTRUCTION UNTIL IT IS SIGNED BY THE ARCHITECTAND ENGINEER.

CONSULTANT

GENERAL NOTES

PROJECT NO: 1102-0005
DATE: 11/17/2017

SHEET NO:

S1.01

CONSTRUCTION SET

CONCRETE STRENGTH	f'c = 3000 PSI			
CLASS OF LAP SPLICE	CLASS "A"		CLASS "B"	
CASE / BAR SIZE	TOP BARS	OTHER BARS	TOP BARS	OTHER BARS
#3	1'-10"	1'-5"	2'-4"	1'-10"
#4	2'-5"	1'-10"	3'-1"	2'-5"
#5	3'-0"	2'-4"	3'-11"	3'-0"
#6	3'-7"	2'-9"	4'-8"	3'-7"
#7	5'-3"	4'-0"	6'-9"	5'-3"
#8	6'-0"	4'-7"	7'-9"	6'-0"
#9	6'-9"	5'-2"	8'-9"	6'-9"
#10	7'-7"	5'-10"	9'-10"	7'-7"
#11	8'-5"	6'-6"	10'-11"	8'-5"

NOTES:

1. UNLESS INDICATED OTHERWISE, USE THE CLASS "B" LAP SPLICE LENGTHS, MULTIPLIED BY THE APPLICABLE FACTOR(S) LISTED BELOW.
2. INCREASE THE LAP SPLICE OR DEVELOPMENT LENGTH BY 50% FOR ANY OF THE FOLLOWING CONDITIONS:
   A. THE BAR COVER IS LESS THAN OR EQUAL TO THE BAR DIAMETER.
   B. WHERE STIRRUPS OR TIES ARE SHOWN IN THE DRAWINGS THROUGHOUT LAP SPLICE OR DEVELOPMENT LENGTH AND THE CLEAR SPACING OF BARS PER (A) IS LESS THAN 1 BAR DIAMETER.
   C. WHERE STIRRUPS OR TIES ARE NOT SHOWN THROUGHOUT LAP SPLICE OR DEVELOPMENT LENGTH AND THE CLEAR SPACING OF BARS PER (A) IS LESS THAN 2 BAR DIAMETERS.
3. A CLASS "A" SPLICE MAY BE USED ONLY WHERE NOTED ON THE DRAWINGS. WHERE DEVELOPMENT LENGTH (Ld) IS REQUIRED OR CALLED OUT ON THE DRAWINGS, USE CLASS "A" LAP SPLICE LENGTH.
4. CLASS "B" LAP SPLICE EQUALS "LTS".
5. TOP BARS ARE HORIZONTAL BARS WITH MORE THAN 12 INCHES OF CONCRETE CAST BELOW THE BARS.
6. SPLICES OF HORIZONTAL REINFORCEMENT IN WALLS SHALL BE STAGGERED.
7. SPLICES OF HORIZONTAL REINFORCEMENT IN WALLS CONTAINING TWO CURTAINS OF REINFORCEMENT SHALL NOT OCCUR IN THE SAME LOCATION.
8. MECHANICAL BAR COUPLERS (ICC APPROVED) MAY BE USED AS AN ALTERNATE TO LAP SPLICES. MECHANICAL COUPLER SHALL BE ADEQUATE TO TRANSFER 125% OF THE YIELD STRENGTH OF THE REINFORCING BARS WHICH ARE SPLICED.
9. WHEN BARS OF DIFFERENT SIZE ARE LAP SPLICED, THE SPLICE LENGTH SHALL BE THE LARGER OF THE FOLLOWING:
   A. Ld OF THE LARGER BAR.
   B. LAP SPLICE LENGTH OF THE SMALLER BAR.

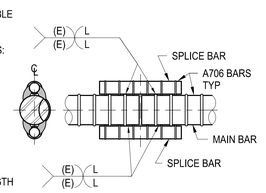

MAIN BAR	SPLICE BAR	(E)	L
#3	#3	1/8	1 1/2"
#4	#3	3/16	1 1/2"
#5	#4	3/16	2"
#6	#5	1/4	2"

C INDIRECT BUTT SPLICE

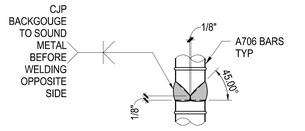

E VERTICAL BAR

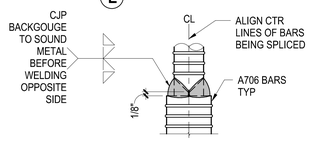

D VERTICAL BAR TRANSITION

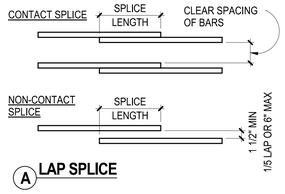

A LAP SPLICE

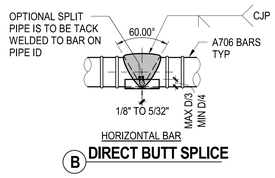

B DIRECT BUTT SPLICE

1 REBAR OFFSET, LAP SPLICE, DEVELOPMENT LENGTH, AND BUTT SPLICE
NOT TO SCALE

BAR SIZE	Ldh, DEVELOPMENT LENGTH (1) (Ldh / Ldh)
	CONCRETE STRENGTH
	f'c = 3000 PSI
#3	0'-8"
#4	0'-11"
#5	1'-2"
#6	1'-4"
#7	1'-7"
#8	1'-10"
#9	2'-1"
#10	2'-3"
#11	2'-6"

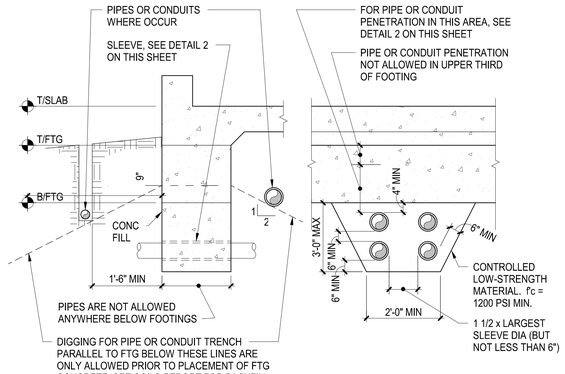

NOTES:
1. CONTRACTOR SHALL BE RESPONSIBLE FOR SHORING OR OTHERWISE MAINTAINING THE SIDES OF THE EXCAVATION FROM CAVE-IN UNTIL ALL BACKFILL IS COMPLETED.
2. ALL PIPES AND CONDUITS SHALL CLEAR SLEEVE BY 1" ALL AROUND, UON
3. FIRE SERVICE LINES SHALL CLEAR SLEEVES 2" ALL AROUND.
4. TRENCHES FOR PIPES AND CONDUITS WITH INVERT ELEVATION BELOW 2'-6" FROM BOTTOM OF FOOTING SHALL BE FILLED PER GEOTECHNICAL ENGINEER'S RECOMMENDATIONS.
5. CAULK SEAL GAP AT SLEEVE-TO-PIPE/CONDUIT INTERFACE ON EXTERIOR SIDE OF FOOTING.

4 HOOKED DEVELOPMENT LENGTH
NOT TO SCALE

2 PIPE OR CONDUIT CLEARANCE AT FOOTINGS
1" = 1'-0"

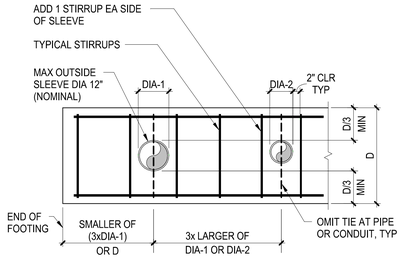

A PIPE OR CONDUIT PENETRATION THRU MIDDLE THIRD

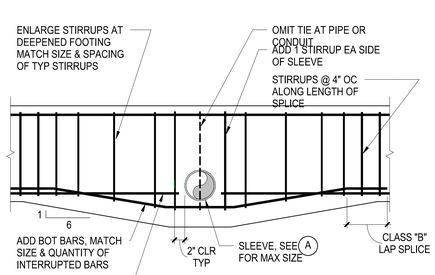

B PIPE OR CONDUIT PENETRATION BELOW MIDDLE THIRD

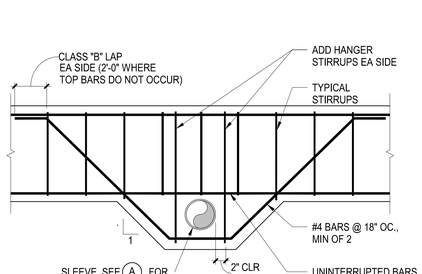

C PIPE OR CONDUIT BELOW BOTTOM REINFORCEMENT

NOTES:
1. DO NOT CUT REINFORCING AT (A) OR (C). ONLY CUT INTERRUPTED REINFORCING AT (B).
2. PROVIDE MINIMUM 2" CLEAR BETWEEN SLEEVE AND REINFORCING.
3. SEE DETAIL 2 ON THIS SHEET FOR SLEEVE-TO-PIPE/CONDUIT CLEARANCE & INFO NOT NOTED.
4. CAULK SEAL GAP AT SLEEVE-TO-PIPE/CONDUIT INTERFACE ON EXTERIOR SIDE OF FOOTING.
5. IF PIPE OR CONDUIT PENETRATION OCCURS AT EITHER TOP OR BOTTOM REBAR SPLICE LOCATION PROVIDE 2 ADDITIONAL SHEAR STIRRUPS FOR A TOTAL OF 4 SHEAR STIRRUPS ON EACH SIDE OF PENETRATION.
6. IF PIPE OR CONDUIT SLEEVE IS ASTM A53 SCHEDULE 40 OR GREATER PIPE, ADDITIONAL STIRRUPS MAY BE ELIMINATED. SLEEVE SHALL BE GALVANIZED.

3 PIPE OR CONDUIT PENETRATIONS THRU CONTINUOUS FOOTINGS AND GRADE BEAMS
1" = 1'-0"

LPAS
2021 Natomas Park Drive Suite 100 Sacramento CA 95833
916 448 0885 lpasdesign.com Architecture + Design

ORGANIC FARM CLASSROOMS INCREMENT 1

INDIAN VALLEY CAMPUS
COLLEGE OF MARIN

NOVATO, CA

FILE NUMBER: 21-C1
IDENTIFICATION STAMP
DIVISION OF THE STATE ARCHITECT
01 - 116913 INCR: 1
AC RE FLS ED SSR CD
DATE 01/12/2018

ARCHITECT'S STAMP APPROVAL

THIS DOCUMENT CONTAINS INFORMATION THAT IS PROPRIETARY TO LPAS, INC. AND IS FURNISHED FOR THE PURPOSES OF REVIEW, BIDDING OR CONSTRUCTION OF THE PROJECT LISTED IN THE JOB TITLE BOX ABOVE

THIS DRAWING IS NOT FINAL OR TO BE USED FOR CONSTRUCTION UNTIL IT IS SIGNED BY THE ARCHITECT AND ENGINEER.

CONSULTANT

STEPHEN RATCHYE No. S-6862 STRUCTURAL STATE OF CALIFORNIA

CONCRETE TYPICAL DETAILS

PROJECT NO: 1102-0005
DATE: 11/17/2017

SHEET NO:

S2.01

CONSTRUCTION SET

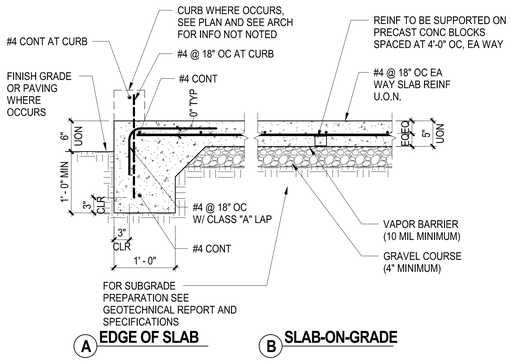

A **EDGE OF SLAB** B **SLAB-ON-GRADE**

1 SLAB-ON-GRADE DETAIL
NOT TO SCALE

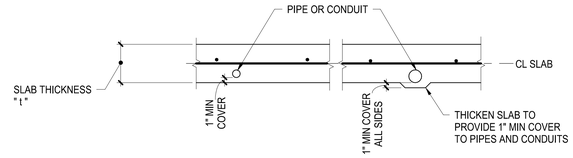

B **SECTION - EMBEDDED IN SLAB**

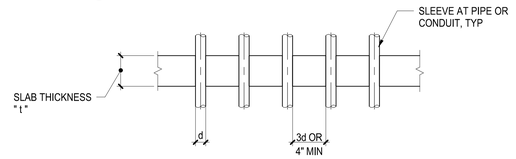

A **SECTION - PENETRATION THROUGH SLAB**

NOTES:
1. DO NOT CUT REINFORCING.
2. USE OF ALUMINUM CONDUIT IN CONTACT WITH CONCRETE IS PROHIBITED.
3. COORDINATE PENETRATION SIZE WITH PIPE/CONDUIT SIZE AND SLEEVE SIZE.

4 PIPE OR CONDUIT PENETRATIONS THROUGH SLAB-ON-GRADE
NOT TO SCALE

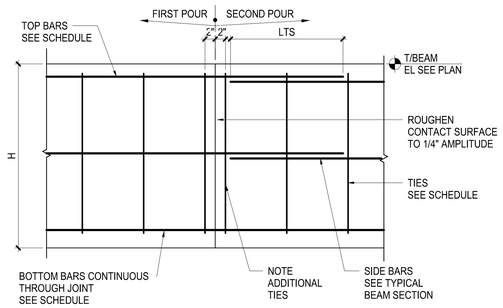

NOTES:
1. CONTRACTOR SHALL SUBMIT CONCRETE CONSTRUCTION JOINT LAYOUT FOR REVIEW AND APPROVAL (REFER TO GENERAL NOTES AND SPECIFICATIONS) PRIOR TO REINFORCEMENT SUBMITTAL.
2. HORIZONTAL CONSTRUCTION JOINTS ARE NOT PERMITTED WITHOUT WRITTEN APPROVAL FROM SER.

5 TYPICAL BEAM CONSTRUCTION JOINT - ELEVATION
NOT TO SCALE

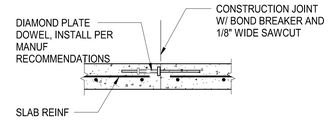

B **CONSTRUCTION JOINT, SLAB-ON-GRADE ≥ 5" THICK**

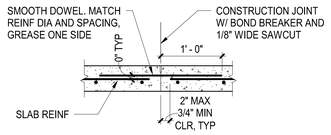

B **CONSTRUCTION JOINT, SLAB-ON-GRADE < 5" THICK**

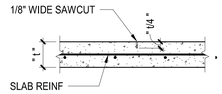

A **CONTROL JOINT**

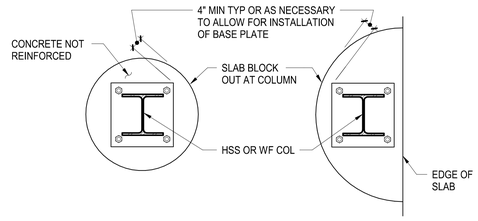

D **PLAN - SLAB BLOCKOUT AT COLUMN** E **PLAN - SLAB BLOCKOUT AT EDGE COLUMN**

EITHER CONTROL OR CONSTRUCTION JOINTS SHALL BE LOCATED NO FURTHER THAN 36 x SLAB THICKNESS UNLESS A SMALLER SPACING IS INDICATED ON DRAWINGS. ASPECT RATIO OF ENCLOSED AREA SHALL NOT EXCEED 1.5. SUBMIT LAYOUT FOR APPROVAL. LOCATE JOINTS ON COLUMN LINES AND UNDER PARTITIONS WHEREVER POSSIBLE. MAXIMUM SLAB AREA CONTROLLED BY JOINTING IS 400 SQ FT. SAWCUTS SHALL BE MADE AS SOON AS POSSIBLE AFTER SLAB FINISHING AS MAY SAFELY BE DONE WITHOUT DISLOGGING AGGREGATE OR BREAKING EDGES. FILL SAWCUT JOINT WITH SEALANT AFTER SLAB HAS CURED.

F **JOINT LAYOUT**

2 SLAB-ON-GRADE CONSTRUCTION AND CONTROL JOINTS AND SLAB BLOCKOUTS
NOT TO SCALE

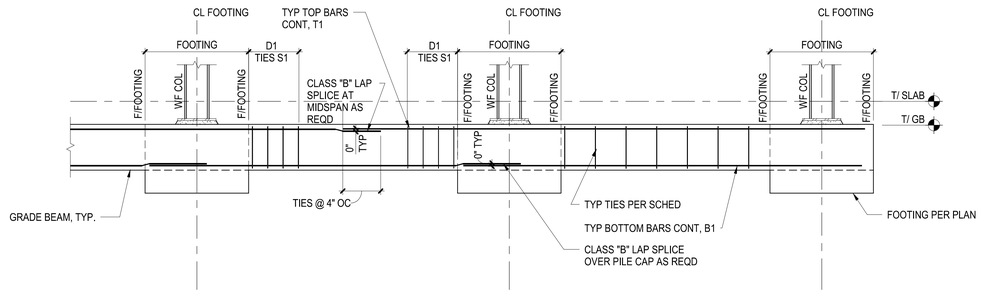

NOTES:
1. FIRST TIE AT THE SUPPORT SHALL BE PLACED NO MORE THAN 2" FROM FACE OF SUPPORT.
2. ALL TIES NOT SHOWN FOR CLARITY.

3 GRADE BEAM REINFORCING ELEVATION
3/8" = 1'-0"

LPAS
2021 Natomas Park Drive Suite 100 Sacramento CA 95833
916 448 0885 lpasdesign.com Architecture + Design

ORGANIC FARM CLASSROOMS INCREMENT 1

INDIAN VALLEY CAMPUS
COLLEGE OF MARIN

NOVATO, CA

FILE NUMBER: 21-C1
IDENTIFICATION STAMP
DIVISION OF THE STATE ARCHITECT
01 - 116913 INCR: 1
AC RE FLS ED SSR CD
DATE 01/12/2018

ARCHITECT'S STAMP APPROVAL

THIS DOCUMENT CONTAINS INFORMATION THAT IS PROPRIETARY TO LPAS, INC. AND IS FURNISHED FOR THE PURPOSES OF REVIEW, BIDDING OR CONSTRUCTION OF THE PROJECT LISTED IN THE JOB TITLE BOX ABOVE

THIS DRAWING IS NOT FINAL OR TO BE USED FOR CONSTRUCTION UNTIL IT IS SIGNED BY THE ARCHITECTAND ENGINEER.

CONSULTANT

REGISTERED PROFESSIONAL ENGINEER STEPHEN RATCHYE NO.S4860 STRUCTURAL STATE OF CALIFORNIA

CONCRETE TYPICAL DETAILS

PROJECT NO: 1102-0005
DATE: 11/17/2017

SHEET NO:

S2.02

CONSTRUCTION SET

1. SEE GENERAL NOTES ON S1.01 FOR MATERIAL SPECIFICATIONS.
2. DECK SHALL HAVE A MINIMUM OF 2" BEARING AT ALL SUPPORTING MEMBERS (MEMBERS PERPENDICULAR TO DECK SPAN), AND 1 1/2" AT ALL PARALLEL MEMBERS.
3. DECK WELDING SHALL BE AS NOTED IN DETAIL 3 ON THIS SHEET.
4. OPENINGS THROUGH DECKING SHOWN ON FRAMING PLANS ARE NOT COMPLETE AS TO NUMBER, SIZE AND LOCATION. FOR COMPLETE INFORMATION REFER TO DRAWINGS OTHER THAN STRUCTURAL.
5. USE STRENGTHENING AT OPENINGS AS SHOWN IN DETAIL 9 ON THIS SHEET UNLESS OTHERWISE NOTED. PROVIDE STRENGTHENING BEFORE CUTTING OPENING.
6. MULTIPLE OPENINGS WITH A CLEAR DISTANCE LESS THAN THREE TIMES THE SIZE OF THE LARGER OPENING TO BE TREATED AS A SINGLE GROUP OPENING.
7. FOR SINGLE OPENING THROUGH DECK THAT CUT ONLY ONE WEB AND ARE 4" SQUARE OR 4" DIAMETER MAXIMUM, NO STRENGTHENING IS REQUIRED.
8. SEE MECHANICAL / PLUMBING DRAWINGS FOR DETAILS OF UTILITIES SUSPENDED FROM THE CONCRETE AND STEEL DECK SYSTEM. POINT LOADS TO THE DECK FROM THESE DETAILS SHALL NOT EXCEED 100 LBS PER HANGER. IN ADDITION, LOADS ON HANGERS SHALL BE DISTRIBUTED IN SUCH A MANNER THAT THE TRIBUTARY LOADS FOR EACH HANGER SHALL NOT EXCEED [THE SUPERIMPOSED DEAD LOADS] [5 LBS PER SQ FT].
9. STEEL DECK CONNECTIONS:
   MP-1, MP2 AND MP4:
   SUPPORTING BEAM: (2) 3/4" DIA. PUDDLE WELDS PER 12" WIDE SHEET
   PARALLEL BEAM: 3/4" DIA. PUDDLE WELDS @12" O.C.
   SIDE LAP: BUTTON PUNCH @12" O.C.
   MP-3: #12 SMS EACH FLUTE. PRE-DRILL STRUCTURAL STEEL TYPICAL. #10 SMS @ 12" O.C. AT PARALLEL BEAM. SIDE LAP #10.

1 STEEL DECK NOTES
NOT TO SCALE

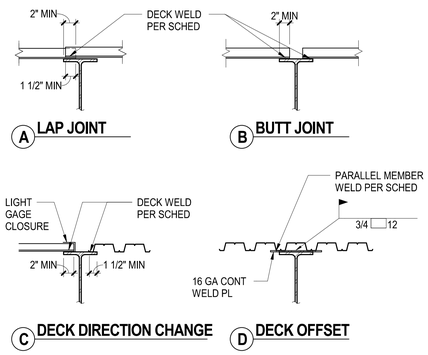

A LAP JOINT
B BUTT JOINT

C DECK DIRECTION CHANGE
D DECK OFFSET

NOTE:
1. SEE STEEL DECK NOTES AND DECK SCHEDULE FOR COMPLETE INFORMATION.

4 TYPICAL DECK JOINT OVER SUPPORT
NOT TO SCALE

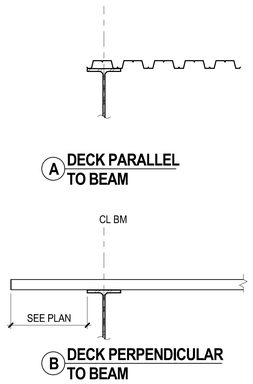

A DECK PARALLEL TO BEAM
B DECK PERPENDICULAR TO BEAM

5 EDGE OF DECK
NOT TO SCALE

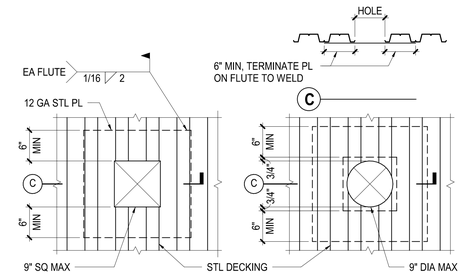

A SQ OR RECTANGULAR HOLES
B ROUND HOLES

NOTES:
1. PLATE MAY BE LOCATED ABOVE DECK AT CONTRACTOR'S OPTION.

9 SMALL OPENING IN STEEL DECK
NOT TO SCALE

LPAS

2424 Natomas Park Drive Suite 100 Sacramento CA 95833
916 448 8885 lpasdesign.com Architecture + Design

ORGANIC FARM CLASSROOMS INCREMENT 1

INDIAN VALLEY CAMPUS
COLLEGE OF MARIN

NOVATO, CA

FILE NUMBER: 21-C1
IDENTIFICATION STAMP
DIVISION OF THE STATE ARCHITECT
01 - 116913 INCR: 1
AC RE FLS ED SSR CD
DATE 01/12/2018

ARCHITECT'S STAMP APPROVAL

THIS DOCUMENT CONTAINS INFORMATION THAT IS PROPRIETARY TO LPAS, INC. AND IS FURNISHED FOR THE PURPOSES OF REVIEW, BIDDING OR CONSTRUCTION OF THE PROJECT LISTED IN THE JOB TITLE BOX ABOVE

THIS DRAWING IS NOT FINAL OR TO BE USED FOR CONSTRUCTION UNTIL IT IS SIGNED BY THE ARCHITECTAND ENGINEER.

CONSULTANT

REGISTERED PROFESSIONAL ENGINEER
STEPHEN RATCHYE
NO. 84860
STRUCTURAL
STATE OF CALIFORNIA

METAL DECK DETAILS AND NOTES

PROJECT NO: 1102-0005
DATE: 11/17/2017

SHEET NO:

S3.01

CONSTRUCTION SET

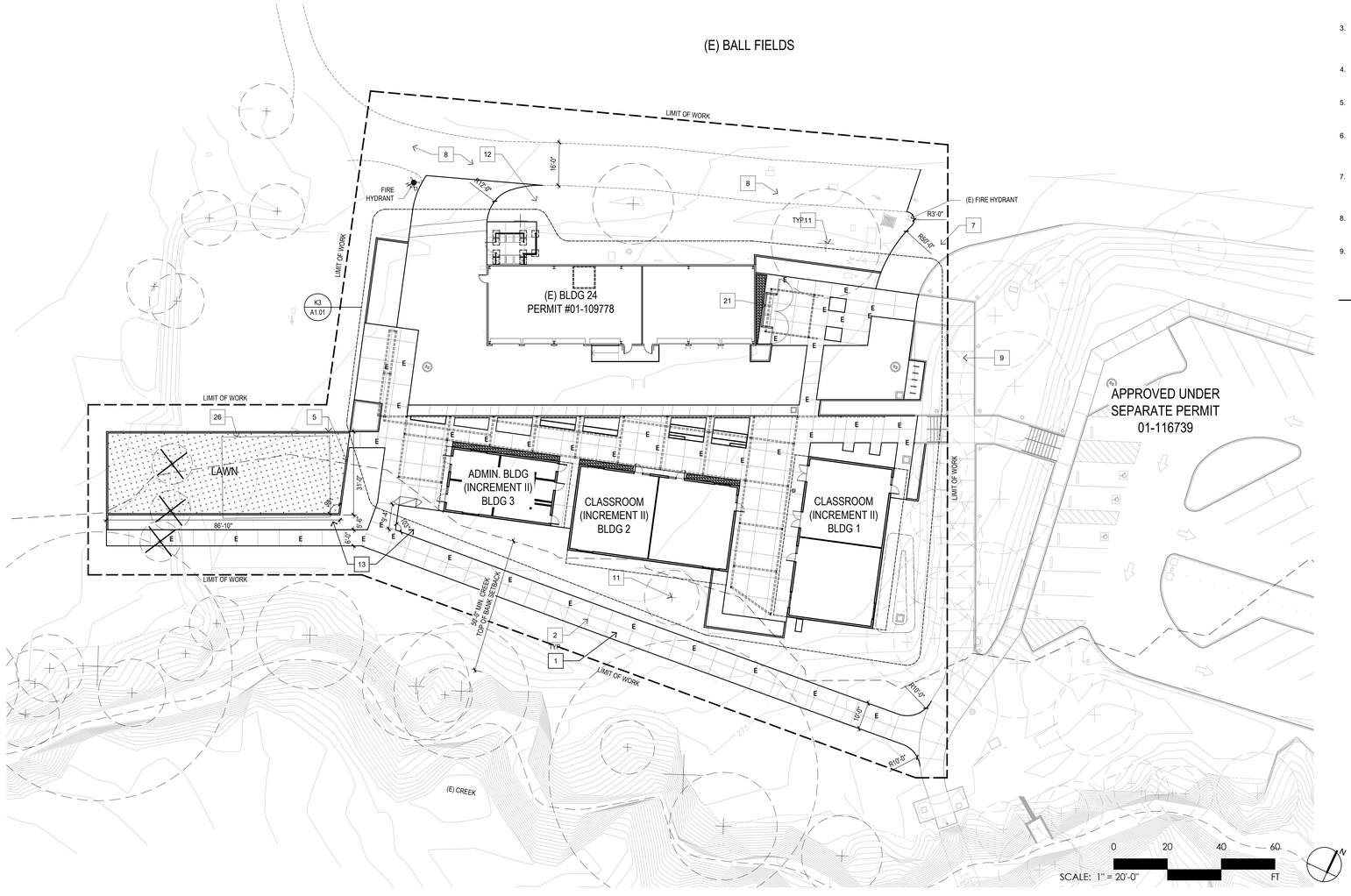

ORGANIC FARM_CLASSROOM SITE PLAN
1"=20'-0"

KEY NOTES K1

1	CONCRETE WALK WITH MEDIUM BROOM FINISH	B1 H10
2	CONTROL JOINT	D1 A1.11
3	ASPHALT PAVING, SEE 5/C4.00	
4	CONCRETE CURB, SEE 3/C4.00	
5	CONCRETE MOW STRIP	F3 A1.11
6	CONCRETE VALLEY GUTTER, SEE 6/C4.00	
7	(E) FIRE ACCESS, TO REMAIN	
8	(E) GRAVEL ROAD	
9	(E) WALK TO REMAIN	
10	TRANSFORMER, SEE ELECTRICAL E1.01	
11	(E) TREE TO REMAIN AND PROTECT IN PLACE	
12	(E) LANDSCAPE AREA	
13	LANDSCAPE PLANTING AREA	
14	DECOMPOSED GRANITE TREE PLANTER	
15	TRASH ENCLOSURE	D9 A1.11
16	CONCRETE SEAT WALL A	H1 A1.11
17	CONCRETE SEAT WALL B	H3 A1.11
18	CONCRETE SEAT WALL C	H5 A1.11
19	SHADE STRUCTURE	K1 A2.03
20	BIKE RACK	D5 A1.11
21	FARM STAND	F1 A1.25
22	FLUSH TRANSITION	B3 A1.11
23	ACCESSIBLE ENTRY	B5 A1.11
23	STORM WATER TREATMENT, SEE 1/C4.00	
24	COBBLE	D3 A1.11
25	BIKE LOCKER	F5 A1.11
26	(E) SHADE HOUSE, TO BE REMOVED	
E	EXPANSION JOINT	F1 A1.11

SITE NOTES F1

1. CONTRACTOR SHALL INFORM ARCHITECT OF ANY DISCREPANCIES BETWEEN THE PLANS AND FIELD CONDITIONS. THE WRITTEN DIMENSION SHALL SUPERSEDE THE DRAWN DIMENSION. ALL FIELD CHANGES MUST BE APPROVED BY THE ARCHITECT PRIOR TO INSTALLATION.
2. ALL DIMENSIONS ARE TO FACE OF CURB AND FACE OF WALL UNLESS OTHERWISE NOTED. ALL DIMENSIONS ARE AT 90 DEGREES OR 45 DEGREES UNLESS OTHERWISE NOTED.
3. SLEEVING SHALL BE PROVIDED AND COORDINATED BY CONTRACTOR DURING CONCRETE WORK AND WALL CONSTRUCTION. ALL SLEEVES SHALL BE SCHEDULE 40 PVC, SIZE AS NOTED. REFER TO CIVIL AND IRRIGATION PLANS FOR LOCATIONS OF SLEEVES.
4. PROVIDE A CROSS SLOPE ON ALL CONCRETE WALKS AND PAVING OF 2% MAXIMUM, 1% MINIMUM TO PROVIDE POSITIVE DRAINAGE. REFER TO CIVIL PLANS FOR MORE INFORMATION.
5. FINISH GRADE SHALL HAVE A MINIMUM OF 2% SLOPE AWAY FROM ALL WALLS AND STRUCTURES UNLESS OTHERWISE SPECIFIED. REFER TO CIVIL PLANS FOR MORE INFORMATION.
6. CONTRACTOR SHALL VERIFY LOCATION OF ALL EXISTING UNDERGROUND UTILITIES AND STRUCTURES PRIOR TO ANY EXCAVATION. CONTRACTOR SHALL REPAIR ANY DAMAGE TO UTILITIES CAUSED BY HIS WORK AT NO ADDITIONAL COST TO THE OWNER.
7. WHERE CONTRACTOR'S WORK INTERFACES WITH EXISTING IMPROVEMENTS, CARE SHALL BE TAKEN TO AVOID DAMAGING EXISTING LANDSCAPING, IRRIGATION AND UTILITIES. ANY DAMAGE TO EXISTING CONDITIONS SHALL BE REPAIRED WITHIN 48 HOURS AT NO ADDITIONAL COST TO THE OWNER.
8. CONTRACTOR IS RESPONSIBLE FOR ADJUSTING THE ELEVATIONS OF ALL NEW AND EXISTING UTILITY VAULTS, BOXES, MANHOLES, AND OTHER STRUCTURES TO NEW FINISH GRADE.
9. REFER TO SPECIFICATIONS FOR MORE INFORMATION.

LPAS
2484 Natomas Park Drive Suite 100 Sacramento CA 95833
916 443 0335 lpasdesign.com Architecture + Design

ORGANIC FARM CLASSROOMS INCREMENT 1

INDIAN VALLEY CAMPUS
COLLEGE OF MARIN

NOVATO, CA

FILE NUMBER: 21-C1
IDENTIFICATION STAMP
DIVISION OF THE STATE ARCHITECT
01 - 116913 INCR: 1
AC RE FLS ED SSR CD
DATE 01/12/2018

LICENSED ARCHITECT CURTIS A. OWYANG NO. C-26756 REGISTERED DATE STATE OF CALIFORNIA

ARCHITECT'S STAMP APPROVAL

THIS DOCUMENT CONTAINS INFORMATION THAT IS PROPRIETARY TO LPAS, INC. AND IS FURNISHED FOR THE PURPOSES OF REVIEW, BIDDING OR CONSTRUCTION OF THE PROJECT LISTED IN THE JOB TITLE BOX ABOVE AND SHALL NOT BE USED FOR ANY OTHER PURPOSE OR RELEASED TO ANY OTHER PARTY WITHOUT THE WRITTEN CONSENT OF LPAS, INC. INFORMATION CONTAINED HEREIN IS AN INSTRUMENT OF PROFESSIONAL SERVICES AND SHALL REMAIN THE PROPERTY OF LPAS, INC. ALL RIGHTS RESERVED COPYRIGHT © 2009.

THIS DRAWING IS NOT FINAL OR TO BE USED FOR CONSTRUCTION UNTIL IT IS SIGNED BY THE ARCHITECT AND ENGINEER.

CONSULTANT

OVERALL SITE PLAN

PROJECT NO: 1102-0005
DATE: 11-17-2017

SHEET NO:

A1.00

CONSTRUCTION SET

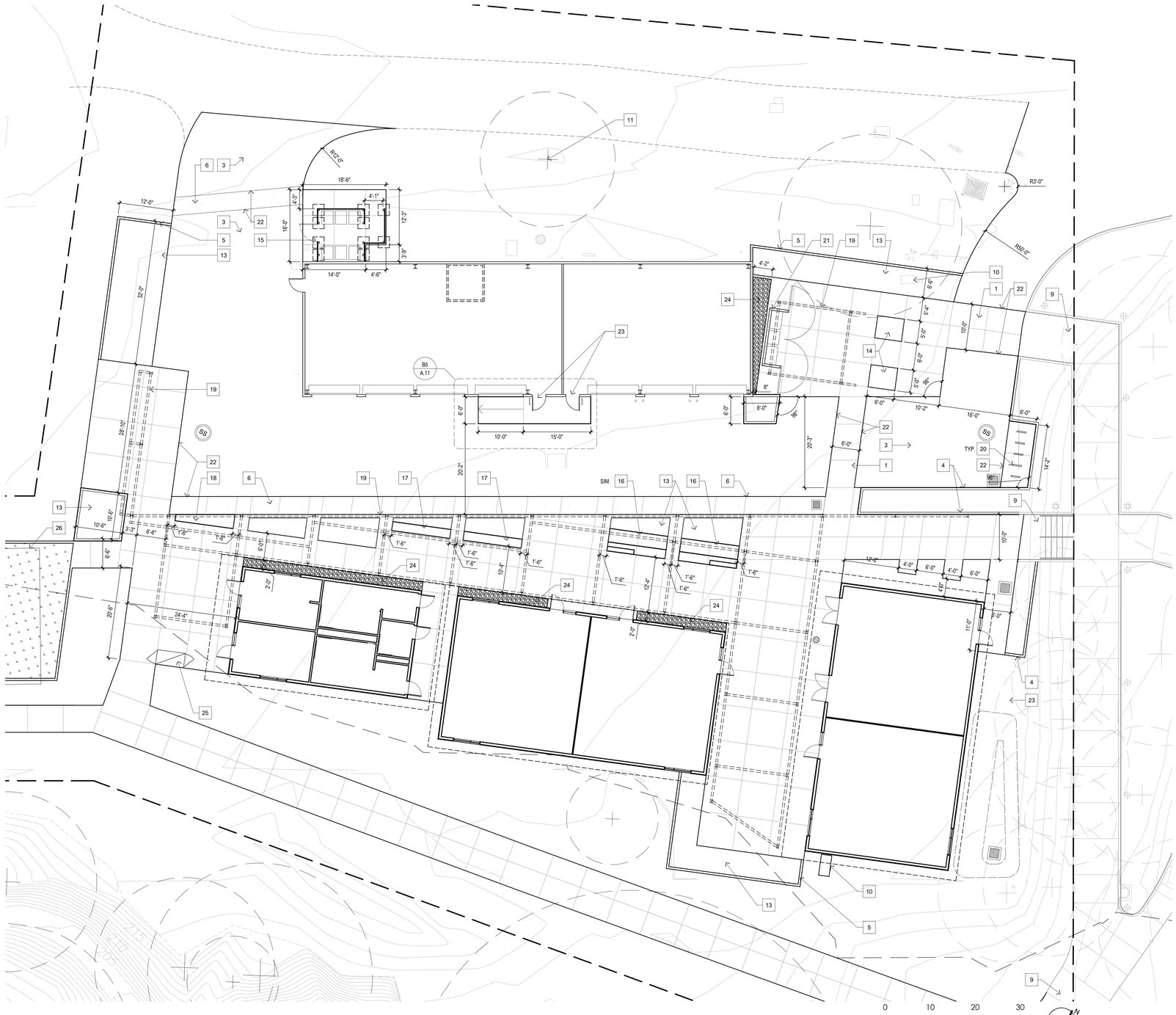

ENLARGED SITE PLAN
1"=10'-0" K3

1	CONCRETE WALK WITH MEDIUM BROOM FINISH	B1 H10
2	CONTROL JOINT	D1 A1.11
3	ASPHALT PAVING, SEE 5/C4.00	
4	CONCRETE CURB, SEE 3/C4.00	
5	CONCRETE MOW STRIP	F3 A1.11
6	CONCRETE VALLEY GUTTER, SEE 6/C4.00	
7	(E) FIRE ACCESS, TO REMAIN	
8	(E) GRAVEL ROAD	
9	(E) WALK TO REMAIN	
10	TRANSFORMER, SEE ELECTRICAL E1.01	
11	(E) TREE TO REMAIN AND PROTECT IN PLACE	
12	(E) LANDSCAPE AREA	
13	LANDSCAPE PLANTING AREA	
14	DECOMPOSED GRANITE TREE PLANTER	
15	TRASH ENCLOSURE	D9 A1.11
16	CONCRETE SEAT WALL A	H1 A1.11
17	CONCRETE SEAT WALL B	H3 A1.11
18	CONCRETE SEAT WALL C	H5 A1.11
19	SHADE STRUCTURE	K1 A2.03
20	BIKE RACK	D5 A1.11
21	FARM STAND	F1 A1.25
22	FLUSH TRANSITION	B3 A1.11
23	ACCESSIBLE ENTRY	B5 A1.11
23	STORM WATER TREATMENT, SEE 1/C4.00	
24	COBBLE	D3 A1.11
25	BIKE LOCKER	F5 A1.11
26	(E) SHADE HOUSE, TO BE REMOVED	
E	EXPANSION JOINT	F1 A1.11

KEY NOTES D1

LPAS
2484 Natomas Park Drive Suite 100 Sacramento CA 95833
916 443 0335 lpasdesign.com Architecture + Design

ORGANIC FARM CLASSROOMS INCREMENT 1

INDIAN VALLEY CAMPUS
COLLEGE OF MARIN

NOVATO, CA

FILE NUMBER: 21-C1
IDENTIFICATION STAMP
DIVISION OF THE STATE ARCHITECT
01 - 116913 INCR: 1
AC RE FLS ED SSR CD
DATE 01/12/2018

LICENSED ARCHITECT
CURTIS A. OWYANG
RENEWAL 08/31/19
STATE OF CALIFORNIA

ARCHITECT'S STAMP APPROVAL

THIS DOCUMENT CONTAINS INFORMATION THAT IS PROPRIETARY TO LPAS, INC. AND IS FURNISHED FOR THE PURPOSES OF REVIEW, BIDDING OR CONSTRUCTION OF THE PROJECT LISTED IN THE JOB TITLE BOX ABOVE AND SHALL NOT BE USED FOR ANY OTHER PURPOSE OR RELEASED TO ANY OTHER PARTY WITHOUT THE WRITTEN CONSENT OF LPAS, INC. INFORMATION CONTAINED HEREIN IS AN INSTRUMENT OF PROFESSIONAL SERVICES AND SHALL REMAIN THE PROPERTY OF LPAS, INC. ALL RIGHTS RESERVED COPYRIGHT © 2009.

THIS DRAWING IS NOT FINAL OR TO BE USED FOR CONSTRUCTION UNTIL IT IS SIGNED BY THE ARCHITECT AND ENGINEER.

CONSULTANT

ENLARGED SITE PLAN

PROJECT NO: 1102-0005
DATE: 11-17-2017

SHEET NO:

A1.01

CONSTRUCTION SET

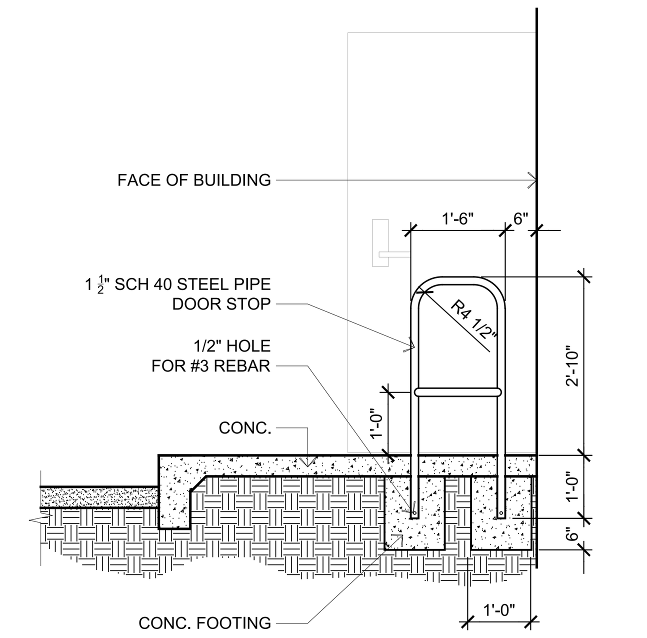

EMBED DOOR STOP B11
1/2" = 1'-0"

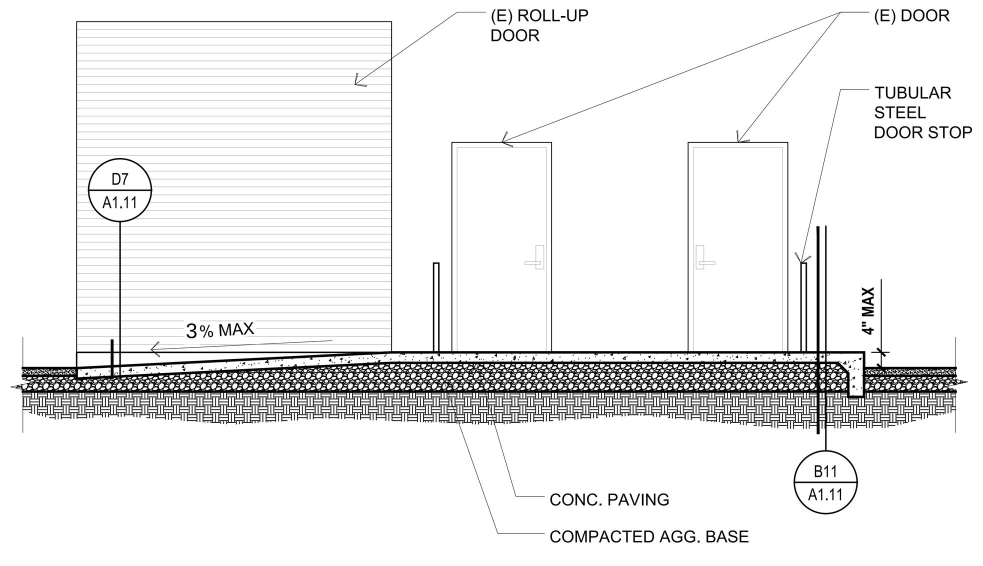

BUILDING 24 ACCESIBLE ENTRY SECTION B8
1/4" = 1'-0"

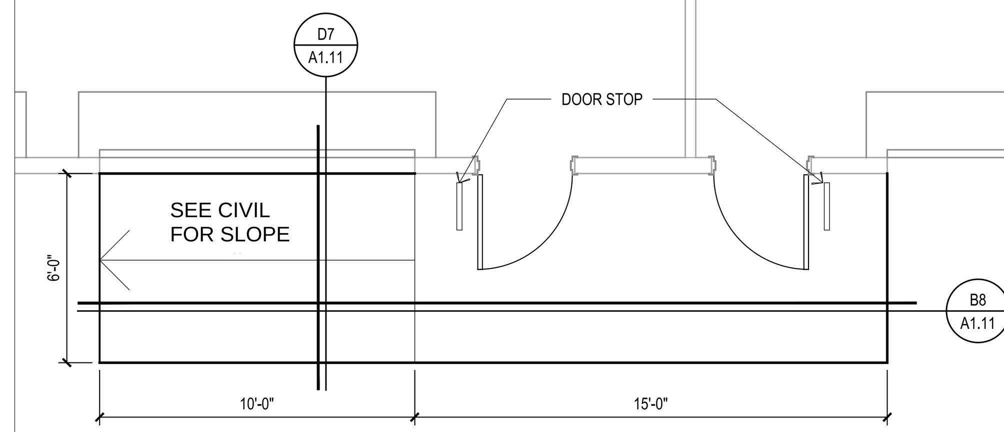

BUILDING 24 ACCESSIBLE ENTRY B5
SCLAE: 1/4" = 1'-0"

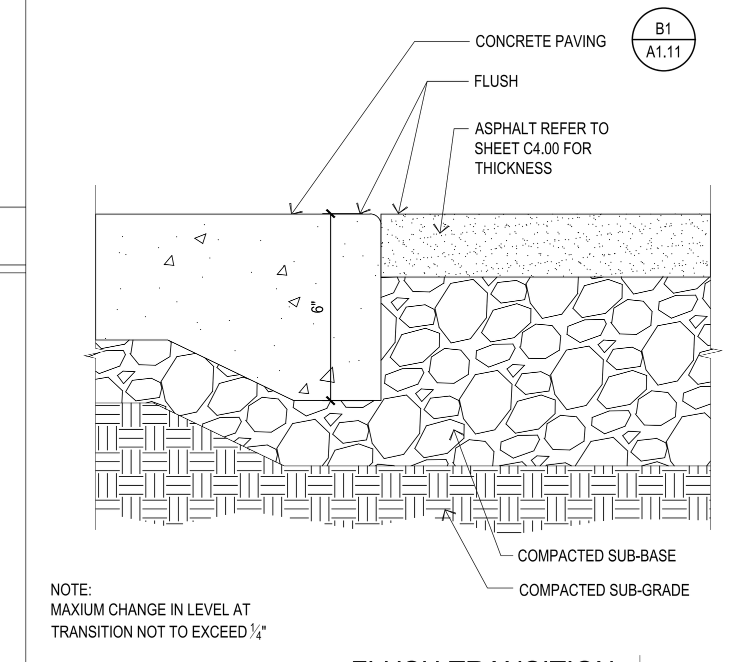

FLUSH TRANSITION B3
A1.11 SCALE: 3" = 1'-0"

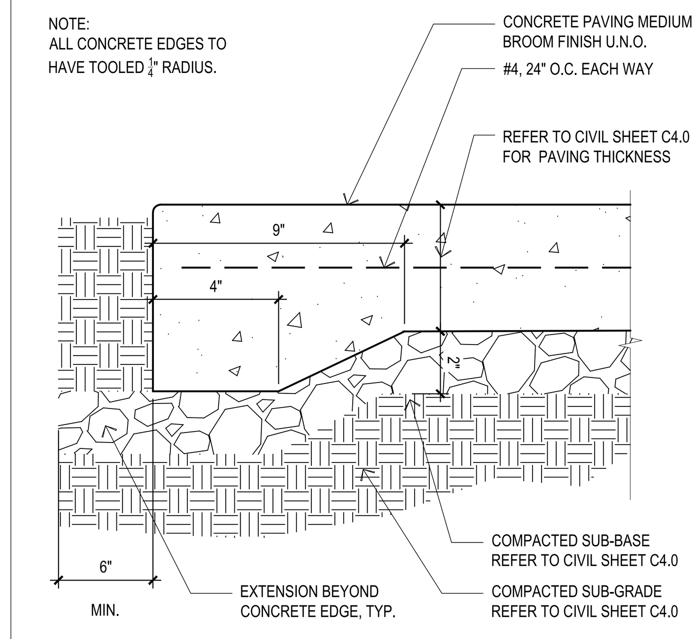

CONCRETE PAVING B1
3" = 1'-0"

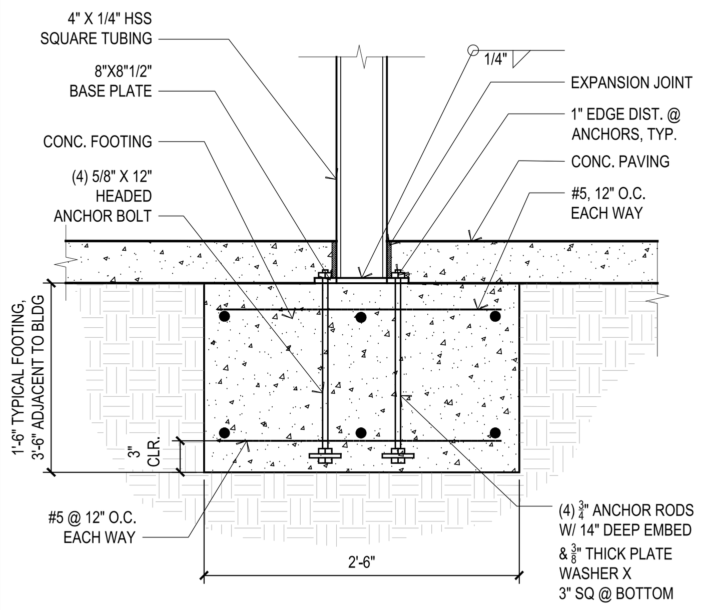

TRASH ENCLOSURE SQUARE FOOTING D11
1/2" = 1'-0"

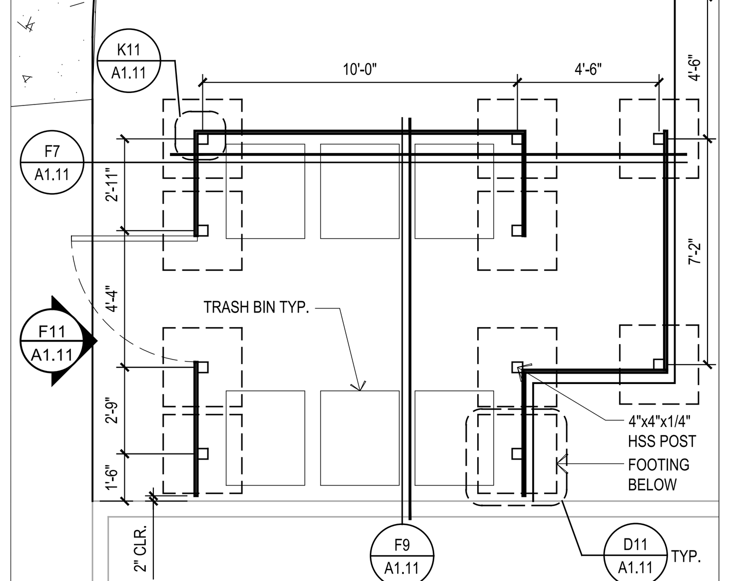

NOTE:
- ALL METAL TO BE PAINTED W/ TWO COATS PRIMER AND TWO COATS OF FINISH.
- ALL METAL FASTENERS TO BE GALVANIZED.

BUILDING 24 TRASH ENCLOSURE D9
SCLAE: 1/4" = 1'-0"

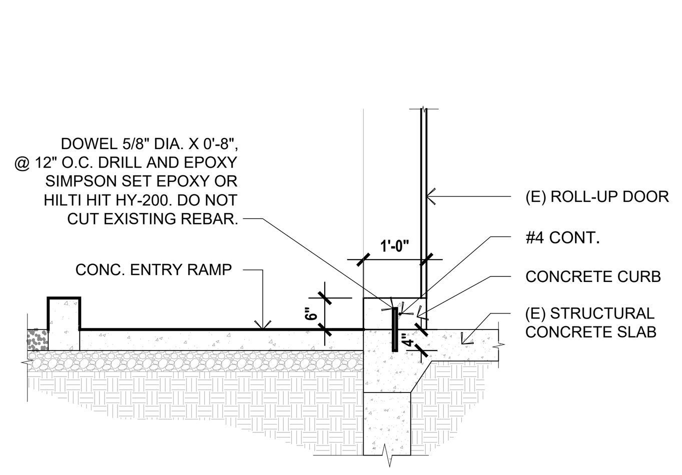

ROLL-UP DOOR CURB STOP D7
SCALE: 1/2" = 1'-0"

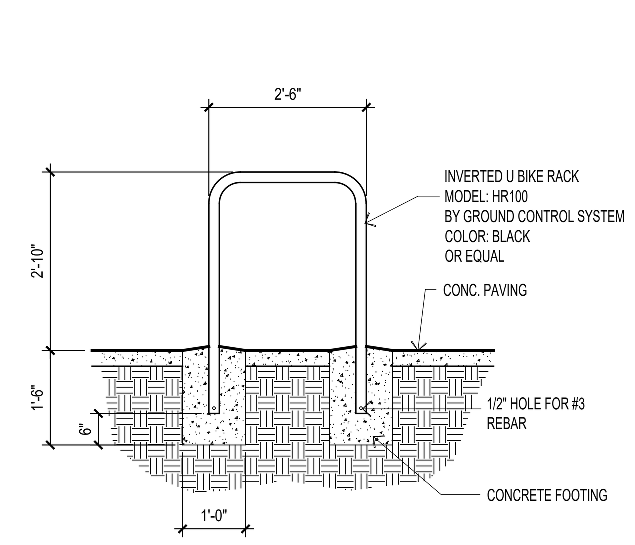

EMBED BIKE RACK D5
1/2" = 1'-0"

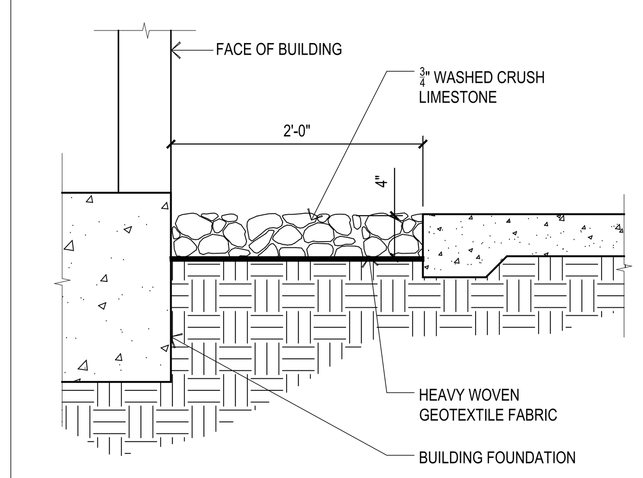

COBBLE APRON D3
A1.11 SCLAE: 1" = 1'-0"

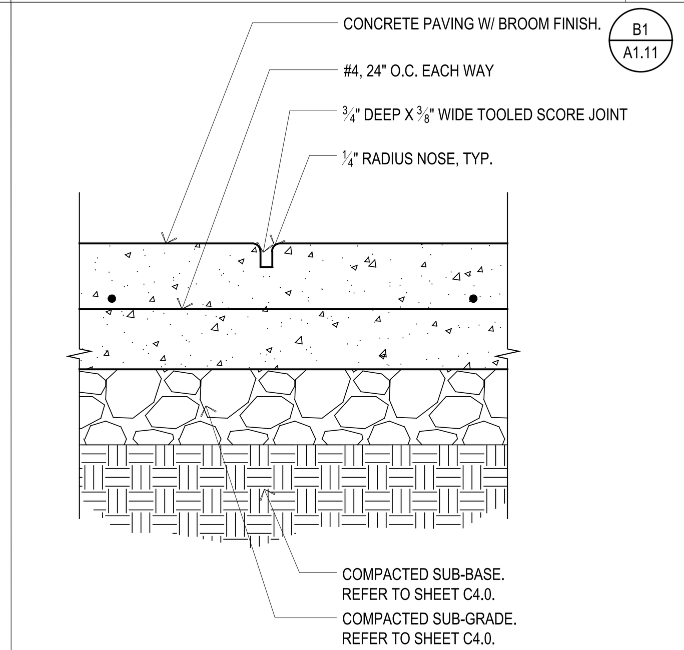

CONTROL JOINT D1
SCALE: 3" = 1'-0"

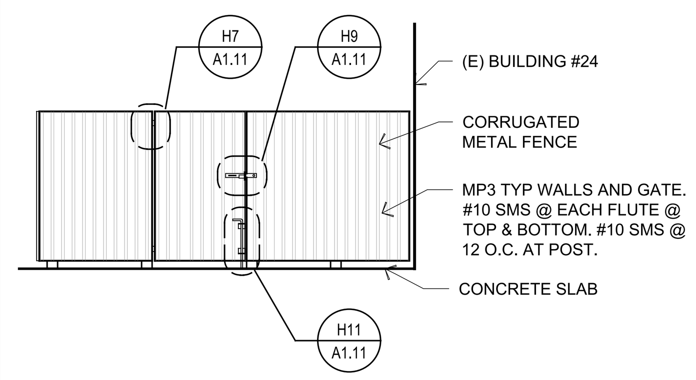

NOTE:
- **ALL METAL TO BE PAINTED W/ TWO COATS PRIMER AND TWO COATS OF FINISH.**
- **ALL WELDS TO BE CONTINUOUS AND GROUND SMOOTH.**
- **ALL METAL FASTENERS TO BE GALVANIZED.**
- **ALL OPEN TUBE ENDS SHALL BE CAPPED.**

TRASH ENCLOSURE ELEVATION F11
1/4" = 1'-0"

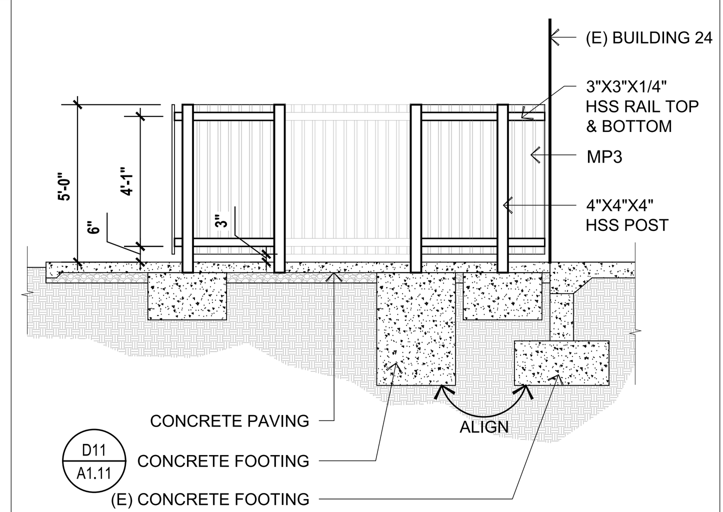

NOTE:
- **ALL METAL TO BE PAINTED W/ TWO COATS PRIMER AND TWO COATS OF FINISH.**
- **ALL WELDS TO BE CONTINUOUS AND GROUND SMOOTH.**
- **ALL METAL FASTENERS TO BE GALVANIZED.**
- **ALL OPEN TUBE ENDS SHALL BE CAPPED.**

TRASH ENCLOSURE SECTION B F9
1/4" = 1'-0"

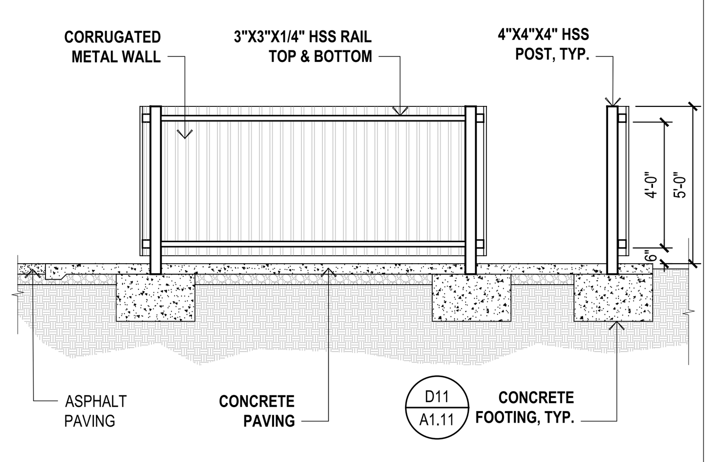

NOTE:
- ALL METAL TO BE PAINTED W/ TWO COATS PRIMER AND TWO COATS OF FINISH.
- ALL WELDS TO BE CONTINUOUS AND GROUND SMOOTH.
- ALL METAL FASTENERS TO BE GALVANIZED.
- ALL OPEN TUBE ENDS SHALL BE CAPPED.

TRASH ENCLOSURE SECTION A F7
1/4" = 1'-0"

BIKE LOCKER BY MADRAX
MODEL: DL100-2
FINISH: GREY

INSTALL AS PER MANUFACTURER'S INSTALLATION INSTRUCTIONS & SPECIFICATIONS

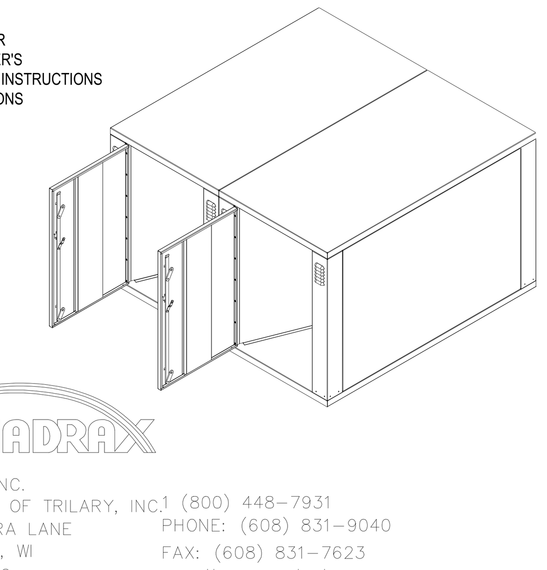

DURA LOCKER - 2 BIKES PER UNIT F5
N.T.S.

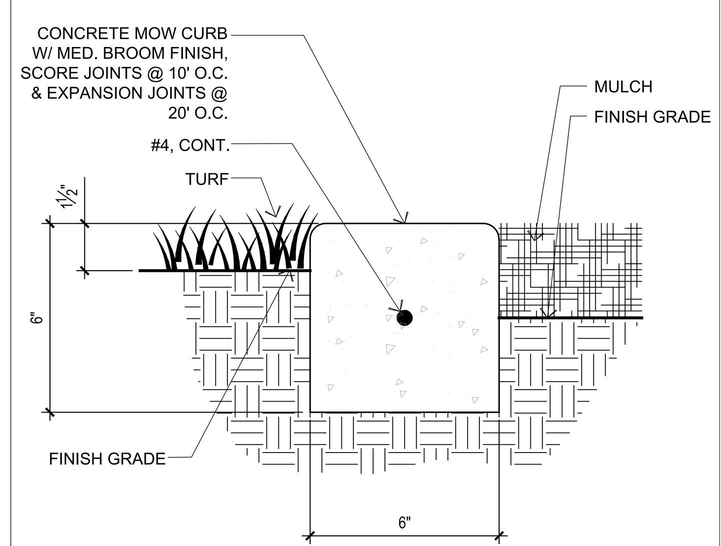

CONCRETE MOW CURB F3
A1.11 SCALE: 3" = 1'-0"

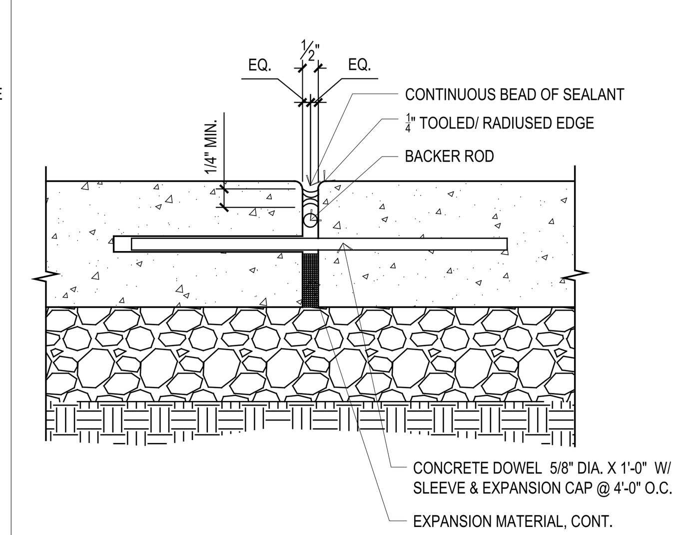

EXPANSION JOINT F1
3" = 1'-0"

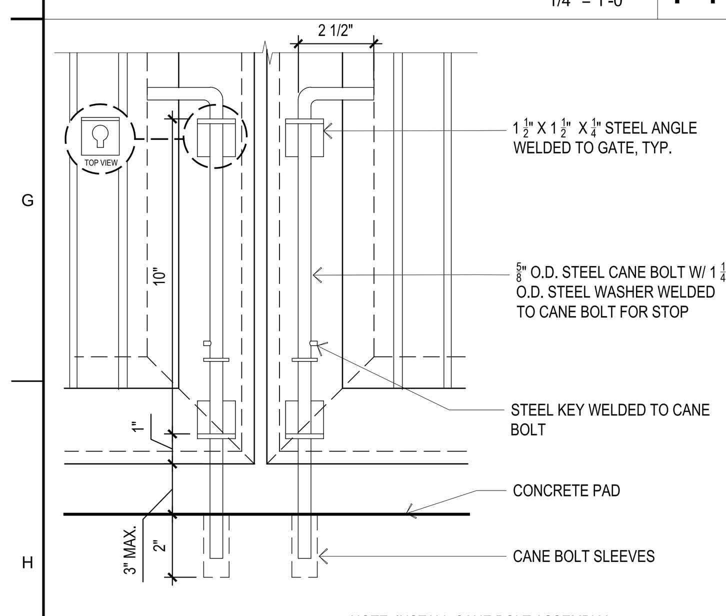

NOTE: INSTALL CANE BOLT ASSEMBLY AT OUTSIDE OF GATE.

TRASH ENCLOSURE CANE BOLT H11
A1.11 SCALE 3" = 1'-0"

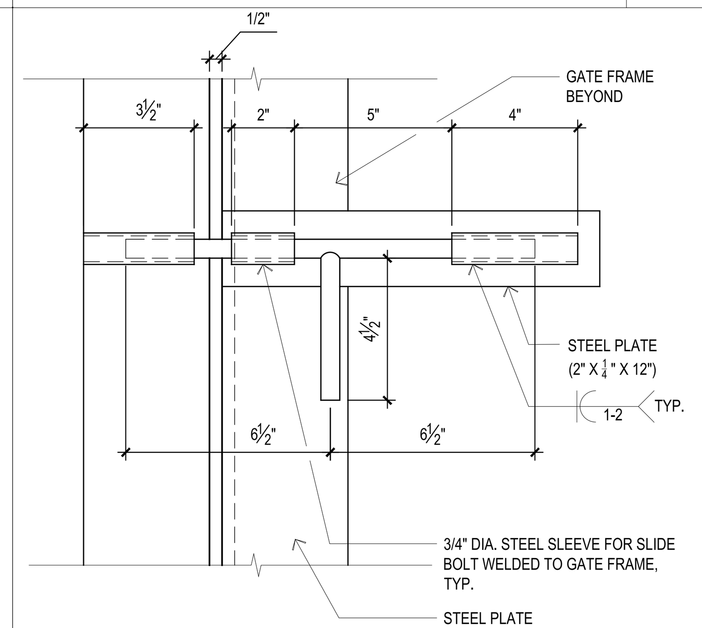

TRASH ENCLOSURE SLIDE BOLT H9
3" = 1'-0"

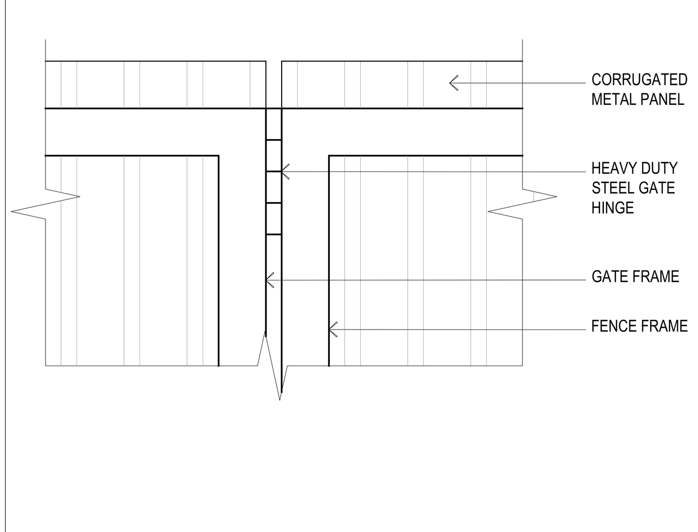

TRASH ENCLOSURE GATE HINGE H7
A1.11 SCALE: 1 1/2" = 1'-0"

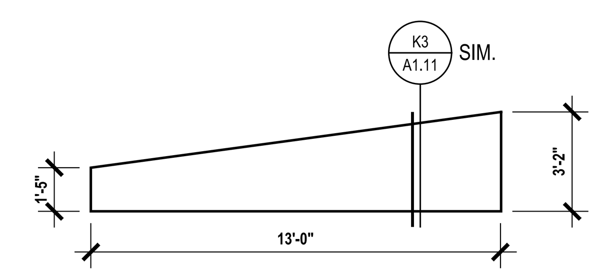

CONCRETE SEAT WALL C - PLAN VIEW H5
SCALE: 1/4" = 1'-0"

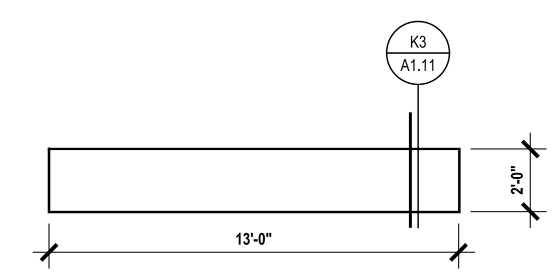

CONCRETE SEAT WALL B - PLAN VIEW H3
SCALE: 1/4" = 1'-0"

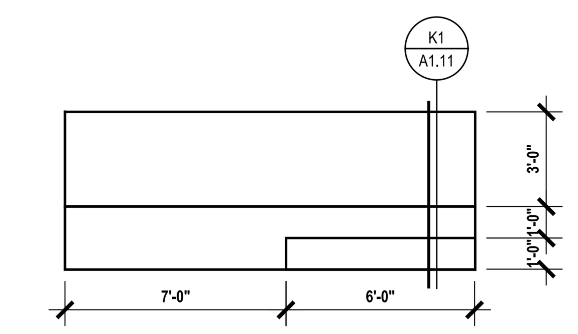

CONCRETE SEAT WALL A - PLAN VIEW H1
SCALE: 1/4" = 1'-0"

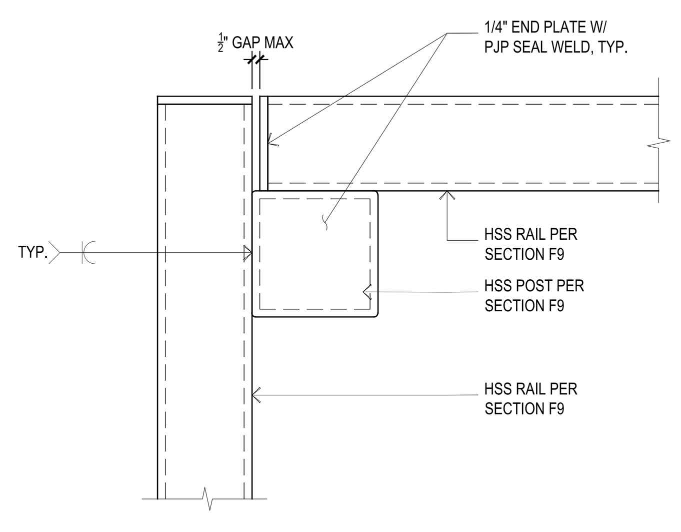

HSS POST AND RAIL CONNECTION K11
3" = 1'-0"

METAL PANEL: MP

MP 1: STRUCTURAL METAL PANEL 18 GAGE ASC 4 1/2" DEEP DECK (ESR 1414) OR EQUAL, 4 1/2" DEPTH, STANDARD INTERLOCKING SIDELAP. FINISH: GALVANIZED, NOT PAINTED

MP 2: STRUCTURAL METAL PANEL 18 GAGE ASC 4 1/2" DEEP DECK, FULLY PERFORATED (ESR 1414), OR EQUAL, 4 1/2" DEPTH, STANDARD INTERLOCKING SIDELAP, PERFORATED PANEL FINISH: GALVANIZED AND PRIMED, FIELD PAINTED PT-3
MP 3 - 22 GA SHALLOW VERCO (ER-0217), 9/16" DEEP, FIELD PAINTED PT-2.

MP 4 - 20 GA VERCO B DECK (ER-0217), 1 1/2" DEEP, FIELD PAINTED PT-1, UON.
PAINT COLORS: PT

PT 1: KM4904 BASLAMIC REDUCTION; SEMI-GLOSS; KELLY-MOORE PAINT

PT 2: HLS4296 GATSBY BRICK; SEMI-GLOSS; KELLY-MOORE PAINT

PT-3: KM4586 ABBEY ROAD; SEMI-GLOSS; KELLY-MOORE PAINT
NOTE: THIS PAINT IS APPLIED TO PERFORATED METAL DECK. SPRAY UNDERSIDE
OF METAL DECK ONLY, DO NOT ROLL AS THIS WILL FILL PERFORATIONS

PT-4: KM4777 HULA GIRL; GLOSS; KELLY-MOORE PAINT

FINISH SCHEDULE K7

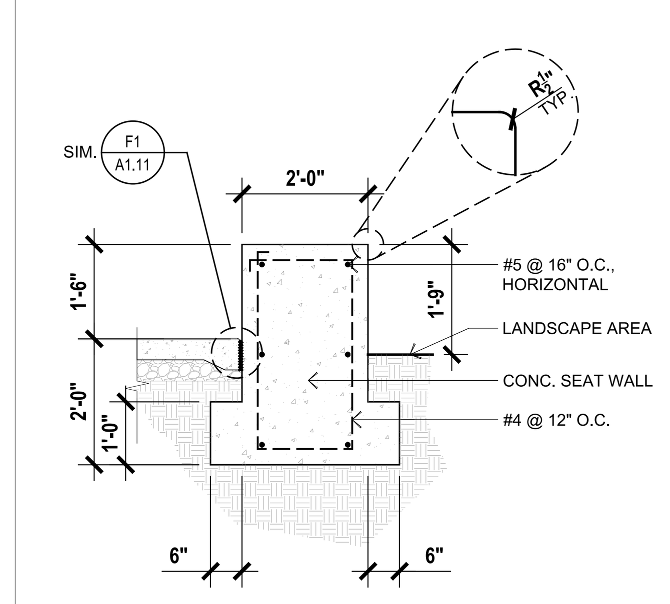

SEAT WALL SECTION B K3
SCALE: 1/2" = 1'-0"

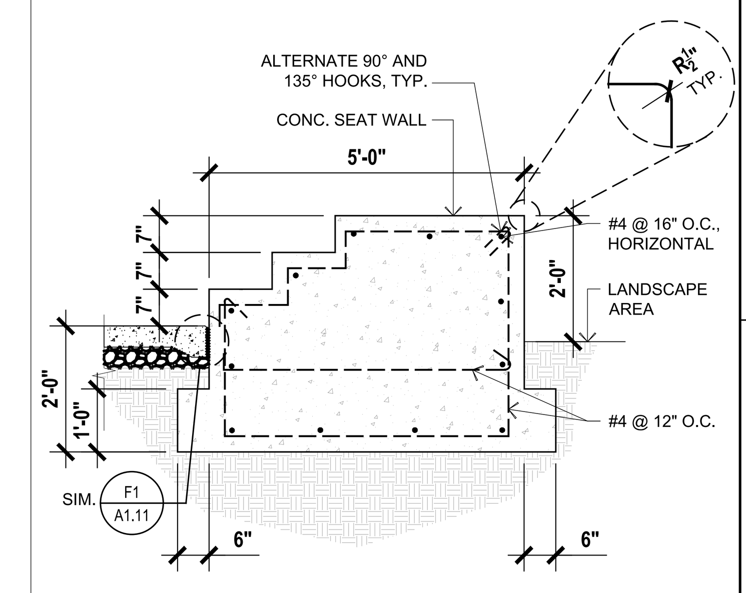

SEAT WALL SECTION A K1
SCALE: 1/2" = 1'-0"

LPAS

2484 Natomas Park Drive Suite 100 Sacramento CA 95833
916 443 0335 lpasdesign.com **Architecture + Design**

ORGANIC FARM CLASSROOMS INCREMENT 1

INDIAN VALLEY CAMPUS
COLLEGE OF MARIN

NOVATO, CA

FILE NUMBER: 21-C1
IDENTIFICATION STAMP
DIVISION OF THE STATE ARCHITECT
01 - 116913 INCR: 1
AC RE FLS ED SSR CD
DATE 01/12/2018

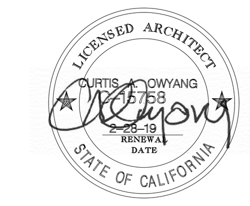

ARCHITECT'S STAMP APPROVAL

THIS DOCUMENT CONTAINS INFORMATION THAT IS PROPRIETARY TO LPAS, INC. AND IS FURNISHED FOR THE PURPOSES OF REVIEW, BIDDING OR CONSTRUCTION OF THE PROJECT LISTED IN THE JOB TITLE BOX ABOVE AND SHALL NOT BE USED FOR ANY OTHER PURPOSE OR RELEASED TO ANY OTHER PARTY WITHOUT THE WRITTEN CONSENT OF LPAS, INC. INFORMATION CONTAINED HEREIN IS AN INSTRUMENT OF PROFESSIONAL SERVICES AND SHALL REMAIN THE PROPERTY OF LPAS, INC. ALL RIGHTS RESERVED COPYRIGHT © 2009.

THIS DRAWING IS NOT FINAL OR TO BE USED FOR CONSTRUCTION UNTIL IT IS SIGNED BY THE ARCHITECT AND ENGINEER.

CONSULTANT

SITE DETAILS

PROJECT NO: 1102-0005
DATE: 11-17-2017

SHEET NO:

A1.11

CONSTRUCTION SET

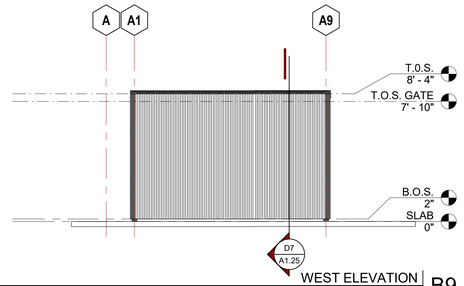

WEST ELEVATION 1/4" = 1'-0" | B9

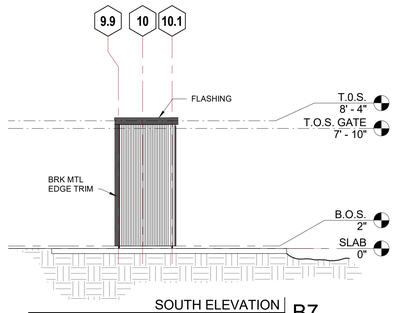

SOUTH ELEVATION 1/4" = 1'-0" | B7

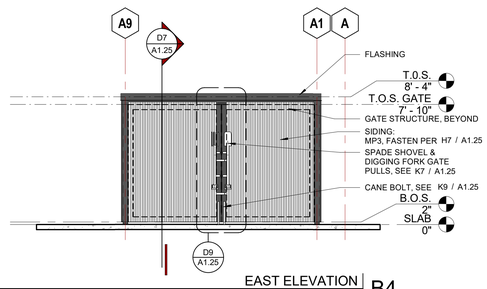

EAST ELEVATION 1/4" = 1'-0" | B4

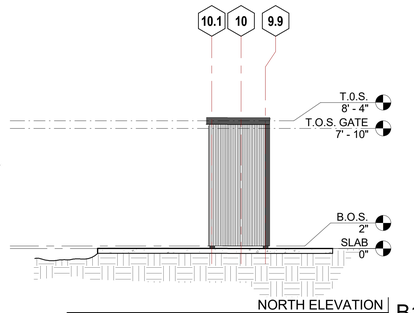

NORTH ELEVATION 1/4" = 1'-0" | B1

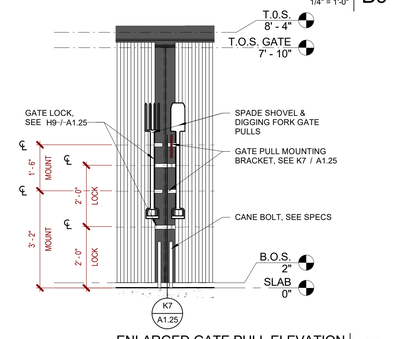

ENLARGED GATE PULL ELEVATION 1/2" = 1'-0" | D9

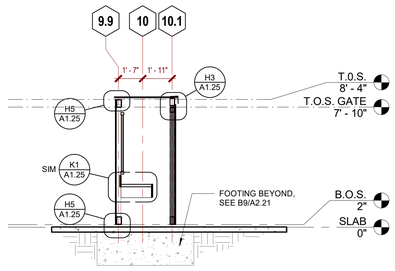

SECTION 1 1/4" = 1'-0" | D7

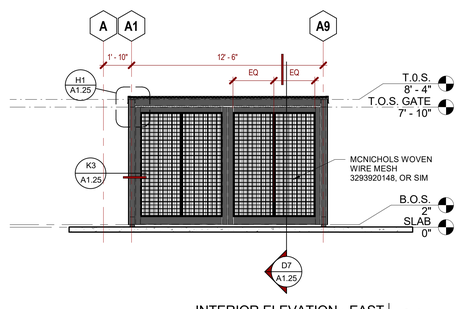

INTERIOR ELEVATION - EAST 1/4" = 1'-0" | D4

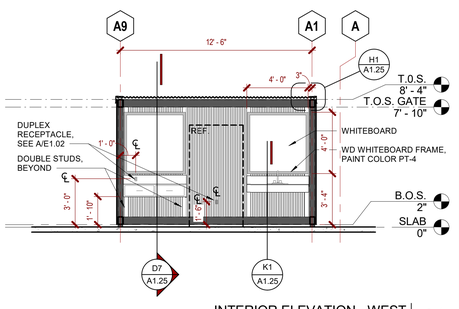

INTERIOR ELEVATION - WEST 1/4" = 1'-0" | D1

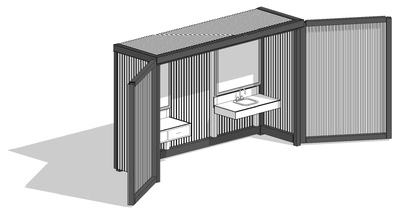

3D F9

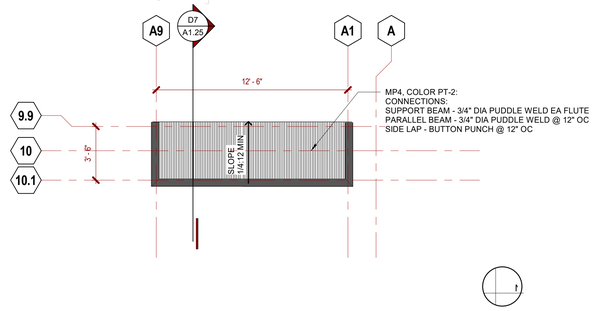

FARM STAND ROOF PLAN 1/4" = 1'-0" | F5

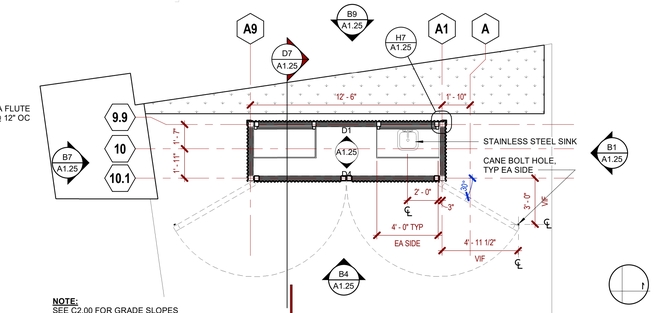

NOTE:
SEE C2.00 FOR GRADE SLOPES

FARM STAND FLOOR PLAN 1/4" = 1'-0" | F1

SHEET NOTES:

1. PAINT ALL STEEL STRUCTURE PT-1.
2. PAINT ALL FLASHING AND BREAK MTL TRIM PT-1.
3. PAINT ALL WOVEN WIRE MESH PT-1
4. PAINT ALL EXPOSED FASTENERS PT-1

METAL PANEL LEGEND:

1. MP 1 - STRUCTURAL METAL PANEL 20 GA VERCO B DECK (ER-0217), ASC 4.5D-12 (ESR 1414) OR EQUAL, 4 1/2" DEPTH, STANDARD INTERLOCKING SIDELAP. FINISH: GALVANIZED, NOT PAINTED
2. MP 2 - STRUCTURAL METAL PANEL 20 GA VERCO B DECK AC (WITH WEB PERFORATIONS)(ER-0217), ASC 4.5D-12 (ESR 1414), OR EQUAL, 4 1/2" DEPTH, STANDARD INTERLOCING SIDELAP, PERFORATED PANEL FINISH: GALVANIZED AND PRIMED, FIELD PANTED PT-3.
3. MP 3 - 22 GA SHALLOW VERCO (ER-0217), 9/16" DEEP, FIELD PAINTED PT-2.
4. MP 4 - 20 GA VERCO B DECK (ER-0217), 1 1/2" DEEP, FIELD PAINTED PT-1, UON.

PAINT LEGEND:

1. PT-1 - KM4904 BALSAMIC REDUCTION; SEMI-GLOSS; KELLY MOORE PAINT
2. PT-2 - HLS4296 GATSBY BRICK; SEMI-GLOSS; KELLY MOORE PAINT
3. PT-3 - KM4586 ABBEY ROAD; SEMI-GLOSS; KELLY MOORE PAINT.

   NOTE: THIS PAINT IS APPLIED TO PERFORATED METAL DECK. SPRAY ON UNDERSIDE OF METAL DECK ONLY, DO NOT ROLL AS THIS WILL FILL PERFORATIONS.
4. PT-4 - KM4777 HULA GIRL; GLOSS; KELLY-MOORE PAINT.

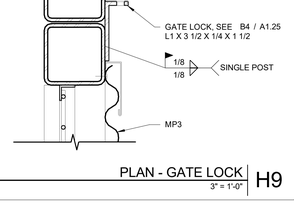

PLAN - GATE LOCK 3" = 1'-0" | H9

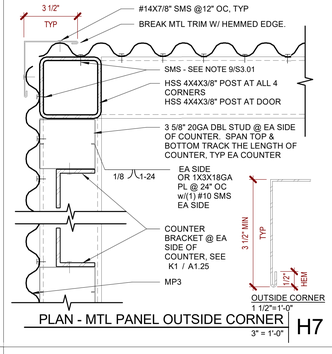

PLAN - MTL PANEL OUTSIDE CORNER 3" = 1'-0" | H7

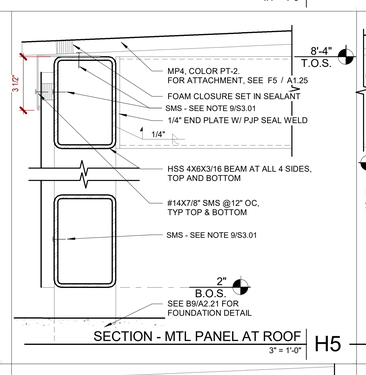

SECTION - MTL PANEL AT ROOF 3" = 1'-0" | H5

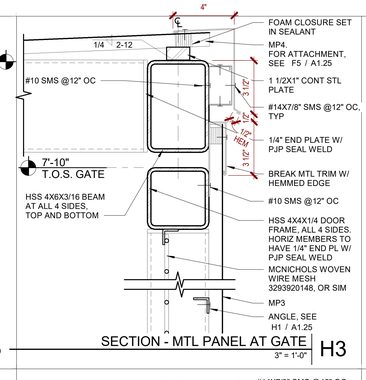

SECTION - MTL PANEL AT GATE 3" = 1'-0" | H3

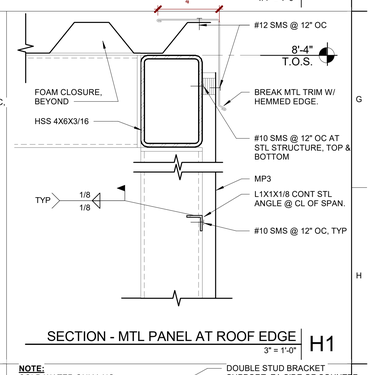

SECTION - MTL PANEL AT ROOF EDGE 3" = 1'-0" | H1

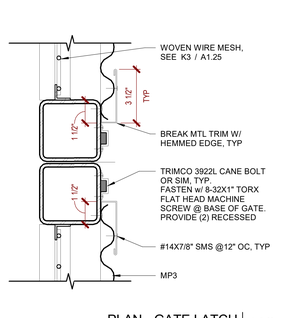

PLAN - GATE LATCH 3" = 1'-0" | K9

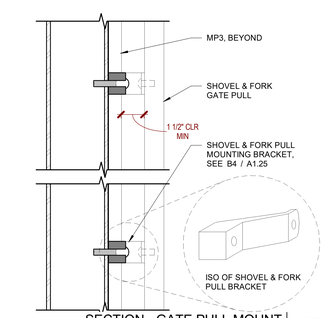

SECTION - GATE PULL MOUNT 3" = 1'-0" | K7

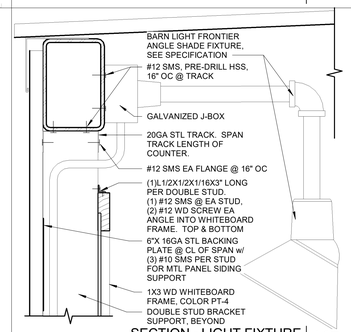

SECTION - LIGHT FIXTURE 3" = 1'-0" | K5

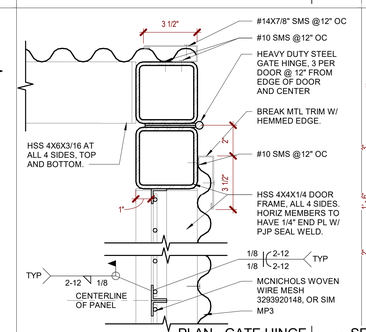

PLAN - GATE HINGE 3" = 1'-0" | K3

NOTE:
COLD WATER ONLY, NO
DRAIN PROTECTION NEEDED

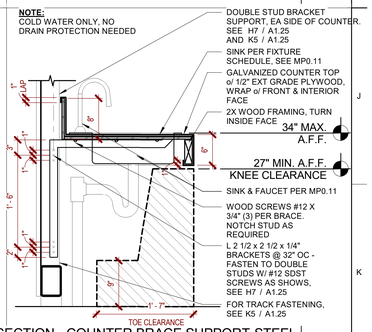

SECTION - COUNTER BRACE SUPPORT-STEEL 1" = 1'-0" | K1

LPAS

2484 Natomas Park Drive Suite 100 Sacramento CA 95833
916 443 0335 lpasdesign.com **Architecture + Design**

ORGANIC FARM CLASSROOMS -INC I

INDIAN VALLEY CAMPUS
COLLEGE OF MARIN

1800 IGNACIO BLVD.
NOVATO, CA

NO. ISSUE DATE

FILE NUMBER: 21-C1

IDENTIFICATION STAMP
DIVISION OF THE STATE ARCHITECT
01 - 116913 INCR: 1
AC RE FLS ED SSR CD
DATE 01/12/2018

LICENSED ARCHITECT
CURTIS A. OWYANG
No. C-26,755
RENEWAL DATE
STATE OF CALIFORNIA

ARCHITECT'S STAMP APPROVAL

THIS DOCUMENT CONTAINS INFORMATION THAT IS PROPRIETARY TO LPAS, INC. AND IS FURNISHED FOR THE PURPOSES OF REVIEW, BIDDING OR CONSTRUCTION OF THE PROJECT LISTED IN THE JOB TITLE BOX ABOVE AND SHALL NOT BE USED FOR ANY OTHER PURPOSE OR RELEASED TO ANY OTHER PARTY WITHOUT THE WRITTEN CONSENT OF LPAS, INC. INFORMATION CONTAINED HEREIN IS AN INSTRUMENT OF PROFESSIONAL SERVICES AND SHALL REMAIN THE PROPERTY OF LPAS, INC. ALL RIGHTS RESERVED COPYRIGHT © 2009.

THIS DRAWING IS NOT FINAL OR TO BE USED FOR CONSTRUCTION UNTIL IT IS SIGNED BY THE ARCHITECT AND ENGINEER.

CONSULTANT

STEPHEN RATCH
No. S4960
STRUCTURAL
STATE OF CALIFORNIA

FARM STAND PLAN, ELEVATIONS & DETAILS

PROJECT NO: 1102-0005

DATE:11-17-2017

SHEET NO:

A1.25

100% AGENCY REVIEW

1. SEE GENERAL NOTES ON SHEET S1.01.
2. SEE TYPICAL FOUNDATION DETAILS ON SHEETS S2.01 AND S2.02.
3. FOUNDATION PLAN IS TAKEN ABOVE SLAB-ON-GRADE. NOMINAL TOP OF SLAB ELEVATION IS CALLED OUT IN PLAN. RELATIVE SLAB ELEVATIONS WITH RESPECT TO SLAB REFERENCE ELEVATION ARE SHOWN THUS: [-0'-2"].
4. ELEVATIONS OF TOP OF FOOTINGS ARE SHOWN WITH RESPECT TO SLAB REFERENCE. ELEVATIONS ARE SHOWN THUS: [-2'-6"].
5. EXCAVATIONS SHALL BE MADE AS NEAR AS POSSIBLE TO THE NEAT LINES REQUIRED BY THE SIZE AND SHAPE OF THE STRUCTURE. NO MATERIAL IS TO BE EXCAVATED UNNECESSARILY.
6. ALL PIER [AND FOUNDATION] EXCAVATIONS MUST BE REVIEWED AND APPROVED BY THE SOILS ENGINEER PRIOR TO PLACEMENT OF CONCRETE.
7. VERIFY LOCATION OF UNDERGROUND UTILITIES BEFORE EXCAVATIONS. NOTIFY ARCHITECT PRIOR TO EXCAVATION IN THE EVENT SUCH UTILITIES ARE ENCOUNTERED.
8. CONTRACTOR SHALL COORDINATE ALL UTILITY PENETRATIONS THROUGH FOOTINGS AND SLABS WITH DETAILS ON SHEET S2.01 AND S2.02.
9. FOR UTILITIES, EQUIPMENT DETAILS, ETC., SEE DRAWINGS OTHER THAN ARCHITECTURAL.
10. SLAB CONSTRUCTION AND CONTROL JOINT LOCATIONS SHALL BE APPROVED BY THE ARCHITECT PRIOR TO PLACING ANY CONCRETE.
11. SEE SHEET A2.21 FOR GRADE BEAM AND FOOTING DETAILS.

FOUNDATION PLAN NOTES C3

1. FOOTINGS, 2'-4" SQUARE x 18" DEEP — D3 A2.21
2. FOOTING, 6'-0" x 3'-9" x 18" DEEP — D5 A2.21
3. GRADE BEAM, 12" x 18" DEEP — D1 A2.21
4. FOOTING, 4'-0" x 6'-0 x 18" DEEP — D7 A2.21

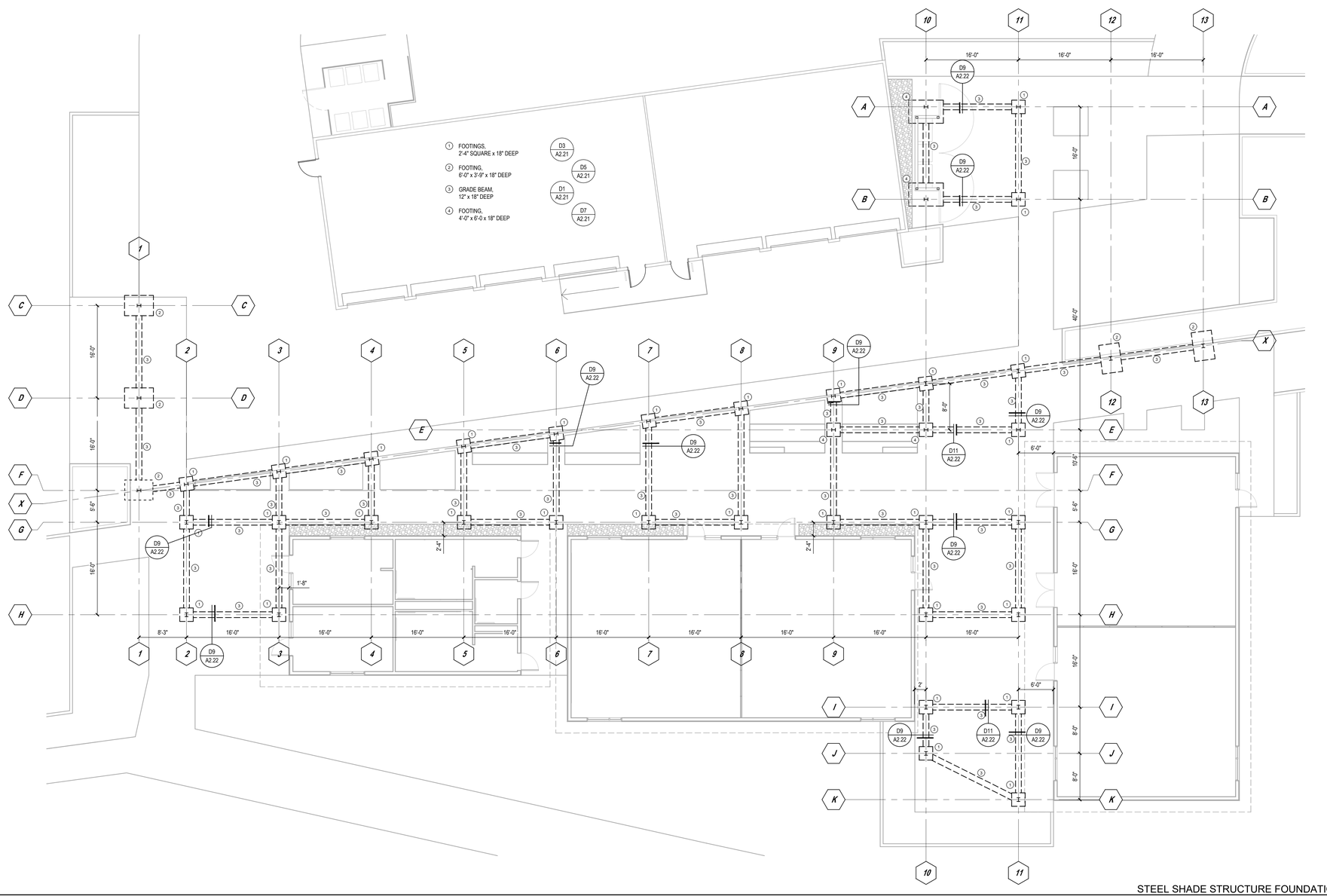

STEEL SHADE STRUCTURE FOUNDATION PLAN K1
SCLAE: 1/8" = 1'-0"

LPAS
2484 Natomas Park Drive Suite 100 Sacramento CA 95833
916 443 0335 lpasdesign.com Architecture + Design

ORGANIC FARM CLASSROOMS INCREMENT 1

INDIAN VALLEY CAMPUS
COLLEGE OF MARIN

NOVATO, CA

FILE NUMBER: 21-C1
IDENTIFICATION STAMP
DIVISION OF THE STATE ARCHITECT
01 - 116913 INCR: 1
AC RE FLS ED SSR CD
DATE 01/12/2018

LICENSED ARCHITECT — CURTIS A. OWYANG — RENEWAL 08/31/2019 — STATE OF CALIFORNIA

ARCHITECT'S STAMP APPROVAL

THIS DOCUMENT CONTAINS INFORMATION THAT IS PROPRIETARY TO LPAS, INC. AND IS FURNISHED FOR THE PURPOSES OF REVIEW, BIDDING OR CONSTRUCTION OF THE PROJECT LISTED IN THE JOB TITLE BOX ABOVE AND SHALL NOT BE USED FOR ANY OTHER PURPOSE OR RELEASED TO ANY OTHER PARTY WITHOUT THE WRITTEN CONSENT OF LPAS, INC. INFORMATION CONTAINED HEREIN IS AN INSTRUMENT OF PROFESSIONAL SERVICES AND SHALL REMAIN THE PROPERTY OF LPAS, INC. ALL RIGHTS RESERVED COPYRIGHT © 2009.

THIS DRAWING IS NOT FINAL OR TO BE USED FOR CONSTRUCTION UNTIL IT IS SIGNED BY THE ARCHITECT AND ENGINEER.

CONSULTANT

REGISTERED PROFESSIONAL ENGINEER — STEPHEN RATCHYE — NO 84860 — STRUCTURAL — STATE OF CALIFORNIA

FOUNDATION AND FRAMING PLAN

PROJECT NO: 1102-0005
DATE: 11-17-2017

SHEET NO:

A2.01

CONSTRUCTION SET

1. SEE GENERAL NOTES ON SHEET S1.01.
2. SEE SHEET A2.22 FOR STEEL BEAM DETAILS.
3. NOMINAL ROOF LINE AND ROOF SLOPE VARIES AS NOTED ON THE PLAN.
4. ELEVATIONS OF TOP OF STEEL BEAMS (COLUMNS) ARE SHOWN WITH REFERENCE TO NOMINAL FIRST FLOOR ELEVATION [0'-0"].
5. SEE S3.01 FOR METAL DECK DETAILS

ROOF FRAMING PLAN NOTES B3

DOWNSPOUT

GUTTER

LEGEND C3

METAL PANEL: MP

MP 1: STRUCTURAL METAL PANEL 18 GAGE ASC 4 1/2" DEEP DECK (ESR 1414) OR EQUAL, 4 1/2" DEPTH, STANDARD INTERLOCKING SIDELAP. FINISH: GALVANIZED, NOT PAINTED
MP 2: STRUCTURAL METAL PANEL 18 GAGE ASC 4 1/2" DEEP DECK, FULLY PERFORATED (ESR 1414), OR EQUAL, 4 1/2" DEPTH, STANDARD INTERLOCKING SIDELAP, PERFORATED PANEL FINISH: GALVANIZED AND PRIMED, FIELD PAINTED PT-3
MP 3 - 22 GA SHALLOW VERCO (ER-0217), 9/16" DEEP, FIELD PAINTED PT-2.

MP 4 - 20 GA VERCO B DECK (ER-0217), 1 1/2" DEEP, FIELD PAINTED PT-1, UON.

PAINT COLORS: PT

PT 1: KM4904 BASLAMIC REDUCTION; SEMI-GLOSS; KELLY-MOORE PAINT

PT 2: HLS4296 GATSBY BRICK; SEMI-GLOSS; KELLY-MOORE PAINT

PT-3: KM4586 ABBEY ROAD; SEMI-GLOSS; KELLY-MOORE PAINT
NOTE: THIS PAINT IS APPLIED TO PERFORATED METAL DECK. SPRAY UNDERSIDE OF METAL DECK ONLY, DO NOT ROLL AS THIS WILL FILL PERFORATIONS

PT-4: KM4777 HULA GIRL; GLOSS; KELLY-MOORE PAINT

NOTE:
PAINT STEEL COLUMNS AND BEAMS PT-1

FINISH SCHEDULE C1

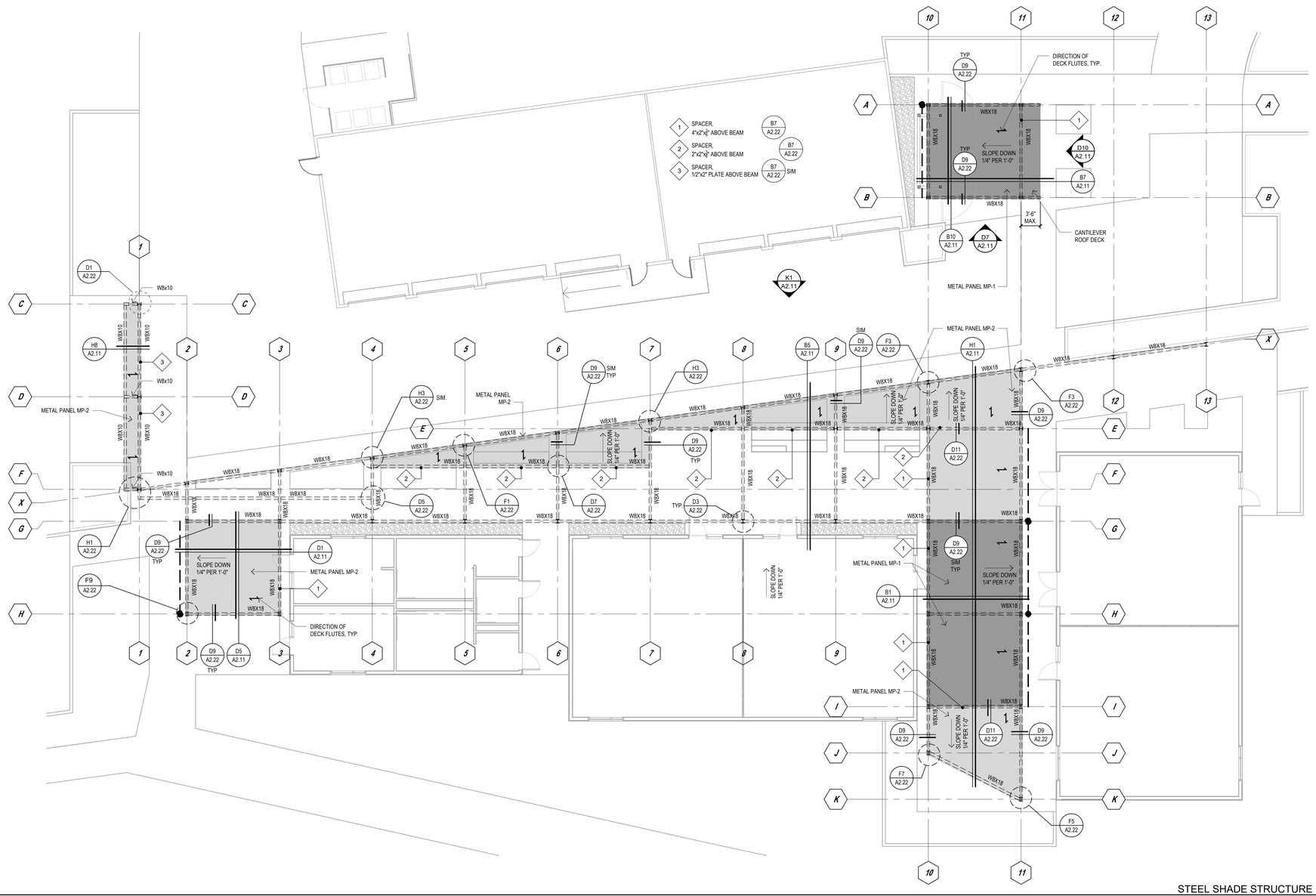

STEEL SHADE STRUCTURE ROOF PLAN K1
SCLAE: 1/8" = 1'-0"

LPAS

2484 Natomas Park Drive Suite 100 Sacramento CA 95833
916 443 0335 lpasdesign.com Architecture + Design

ORGANIC FARM CLASSROOMS INCREMENT 1

INDIAN VALLEY CAMPUS
COLLEGE OF MARIN

NOVATO, CA

FILE NUMBER: 21-C1
IDENTIFICATION STAMP
DIVISION OF THE STATE ARCHITECT
01 - 116913 INCR: 1
AC RE FLS ED SSR CD
DATE 01/12/2018

ARCHITECT'S STAMP APPROVAL

THIS DOCUMENT CONTAINS INFORMATION THAT IS PROPRIETARY TO LPAS, INC. AND IS FURNISHED FOR THE PURPOSES OF REVIEW, BIDDING OR CONSTRUCTION OF THE PROJECT LISTED IN THE JOB TITLE BOX ABOVE AND SHALL NOT BE USED FOR ANY OTHER PURPOSE OR RELEASED TO ANY OTHER PARTY WITHOUT THE WRITTEN CONSENT OF LPAS, INC. INFORMATION CONTAINED HEREIN IS AN INSTRUMENT OF PROFESSIONAL SERVICES AND SHALL REMAIN THE PROPERTY OF LPAS, INC. ALL RIGHTS RESERVED COPYRIGHT © 2009.

THIS DRAWING IS NOT FINAL OR TO BE USED FOR CONSTRUCTION UNTIL IT IS SIGNED BY THE ARCHITECT AND ENGINEER.

CONSULTANT

ROOF PLAN

PROJECT NO: 1102-0005
DATE: 11-17-2017

SHEET NO:

A2.02

CONSTRUCTION SET

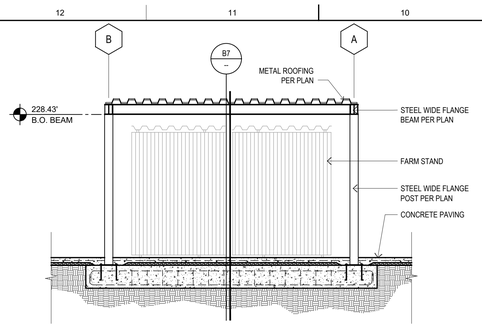

SHADE COVER SECTION B10
A2.11 1/4" = 1'-0"

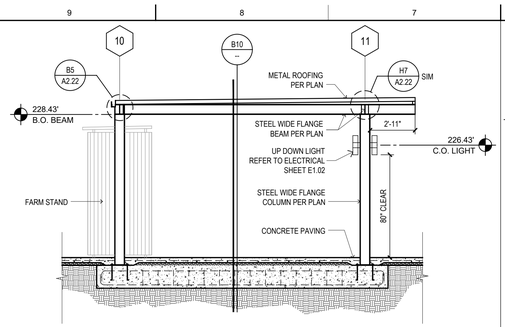

SHADE COVER SECTION B7
A2.11 1/4" = 1'-0"

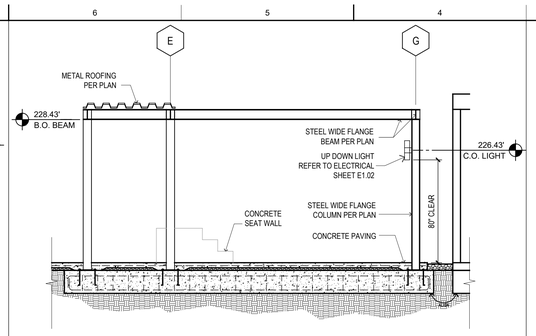

SHADE COVER SECTION B5
A2.11 1/4" = 1'-0"

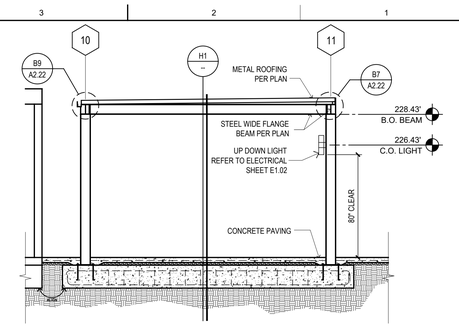

SHADE COVER SECTION B1
A2.11 1/4" = 1'-0"

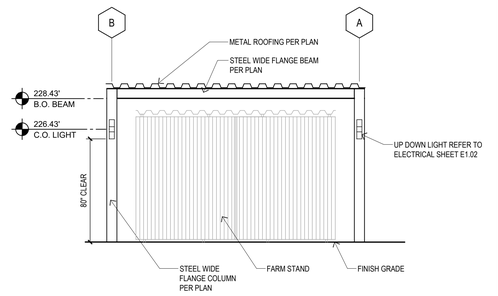

SHADE COVER ELEVATION D10
A2.11 1/4" = 1'-0"

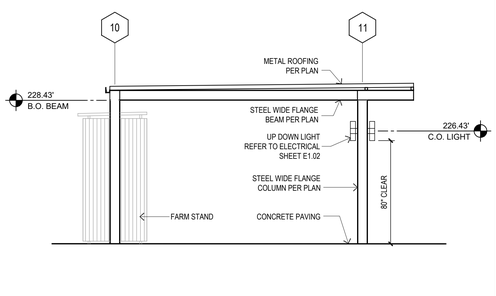

SHADE COVER ELEVATION D7
A2.11 1/4" = 1'-0"

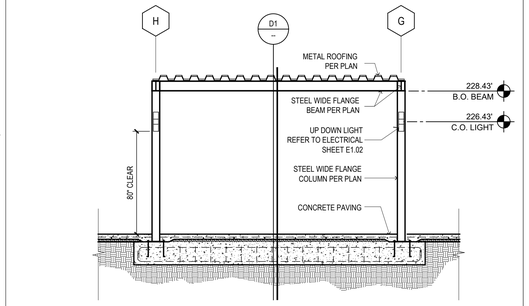

SHADE COVER SECTION D5
A2.11 1/4" = 1'-0"

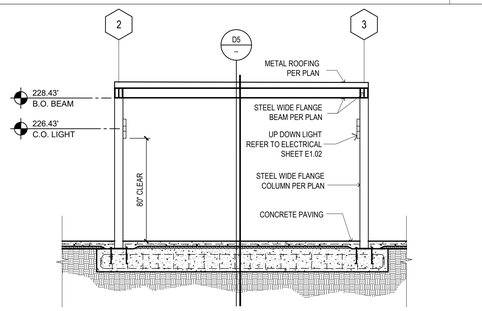

SHADE COVER SECTION D1
A2.11 1/4" = 1'-0"

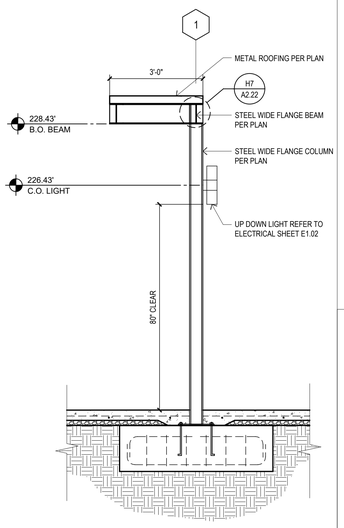

SHADE COVER SECTION H8
A2.11 1/2" = 1'-0"

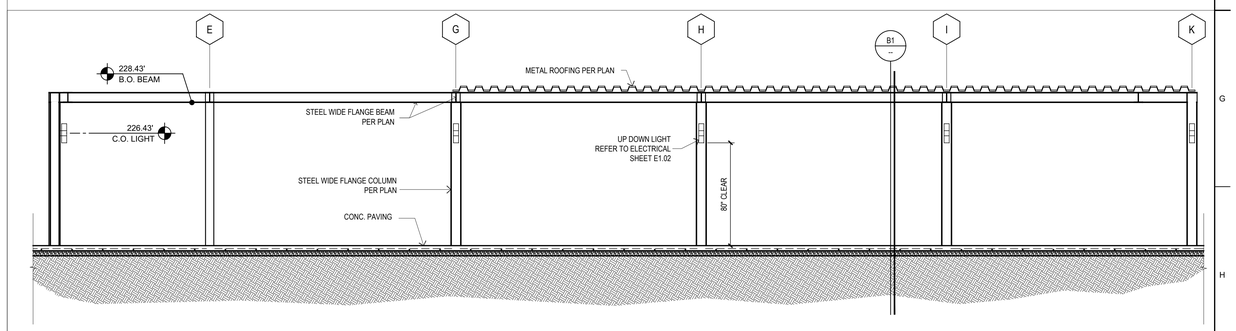

SHADE COVER SECTION H1
A2.11 1/4" = 1'-0"

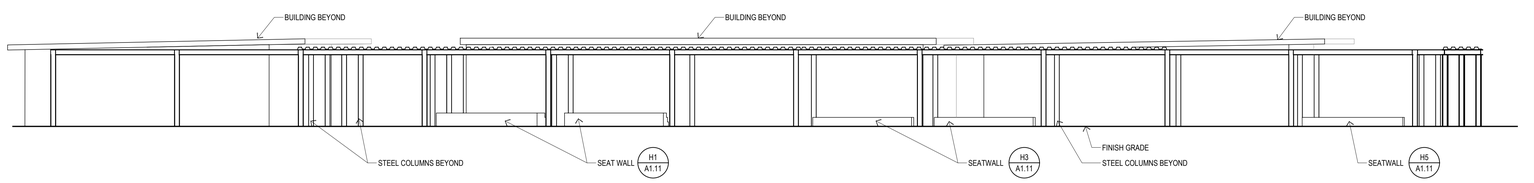

STEEL SHADE STRUCTURE K1
A2.11 1/8" = 1'-0"

LPAS
2484 Natomas Park Drive Suite 100 Sacramento CA 95833
916 443 0335 lpasdesign.com Architecture + Design

ORGANIC FARM CLASSROOMS INCREMENT 1

INDIAN VALLEY CAMPUS
COLLEGE OF MARIN

NOVATO, CA

FILE NUMBER: 21-C1
IDENTIFICATION STAMP
DIVISION OF THE STATE ARCHITECT
01 - 116913 INCR: 1
AC RE FLS ED SSR CD
DATE 01/12/2018

LICENSED ARCHITECT CURTIS A. OWYANG No. C-17618 RENEWAL 08-31-19 STATE OF CALIFORNIA

ARCHITECT'S STAMP APPROVAL

THIS DOCUMENT CONTAINS INFORMATION THAT IS PROPRIETARY TO LPAS, INC. AND IS FURNISHED FOR THE PURPOSES OF REVIEW, BIDDING OR CONSTRUCTION OF THE PROJECT LISTED IN THE JOB TITLE BOX ABOVE AND SHALL NOT BE USED FOR ANY OTHER PURPOSE OR RELEASED TO ANY OTHER PARTY WITHOUT THE WRITTEN CONSENT OF LPAS, INC. INFORMATION CONTAINED HEREIN IS AN INSTRUMENT OF PROFESSIONAL SERVICES AND SHALL REMAIN THE PROPERTY OF LPAS, INC. ALL RIGHTS RESERVED COPYRIGHT © 2009.

THIS DRAWING IS NOT FINAL OR TO BE USED FOR CONSTRUCTION UNTIL IT IS SIGNED BY THE ARCHITECT AND ENGINEER.

CONSULTANT

REGISTERED PROFESSIONAL ENGINEER STEPHEN RAY CUTLER NO. S14660 STRUCTURAL STATE OF CALIFORNIA

ELEVATIONS AND SECTIONS

PROJECT NO: 1102-0005
DATE: 11-17-2017

SHEET NO:

A2.11

CONSTRUCTION SET

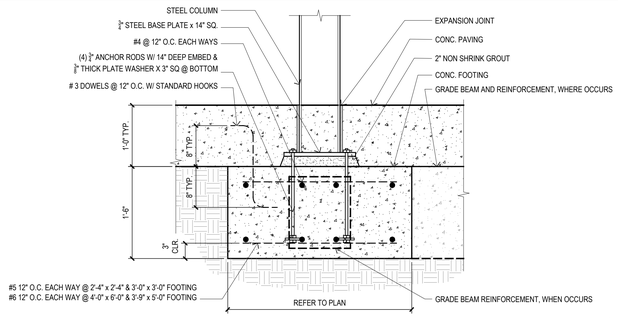

CONCRETE FOOTING SECTION 1" = 1'-0" B9

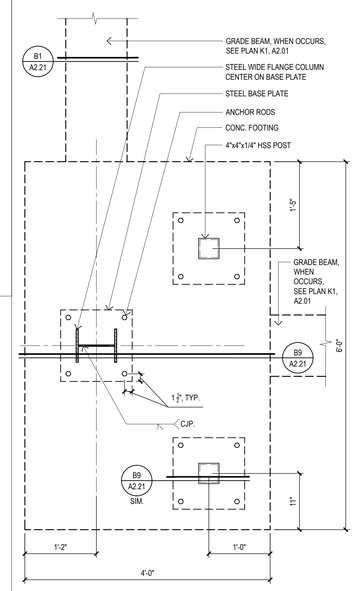

CONCRETE FOOTING 1" = 1'-0" D7

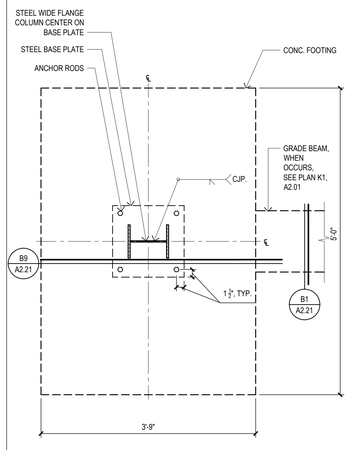

CONCRETE FOOTING 1" = 1'-0" D5

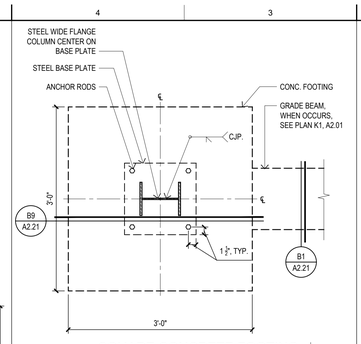

SQUARE CONCRETE FOOTING 1" = 1'-0" B3

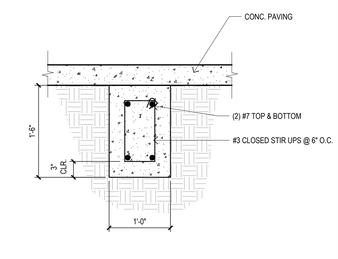

GRADE BEAM 1" = 1'-0" B1

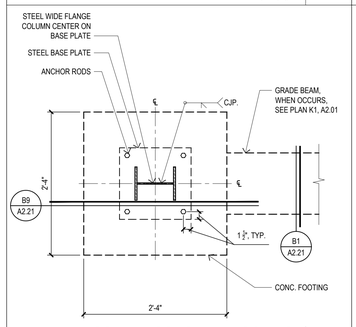

SQUARE CONCRETE FOOTING 1" = 1'-0" D3

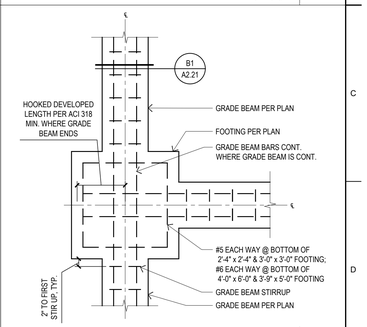

GRADE BEAM 3/4" = 1'-0" D1

LPAS
2484 Natomas Park Drive Suite 100 Sacramento CA 95833
916 443 0335 lpasdesign.com Architecture + Design

ORGANIC FARM CLASSROOMS INCREMENT 1

INDIAN VALLEY CAMPUS
COLLEGE OF MARIN

NOVATO, CA

FILE NUMBER: 21-C1
IDENTIFICATION STAMP
DIVISION OF THE STATE ARCHITECT
01 - 116913 INCR: 1
AC RE FLS ED SSR CD
DATE 01/12/2018

LICENSED ARCHITECT
CHRISTOPHER A. YOUNG
C-26178
RENEWAL DATE
STATE OF CALIFORNIA

ARCHITECT'S STAMP APPROVAL

THIS DOCUMENT CONTAINS INFORMATION THAT IS PROPRIETARY TO LPAS, INC. AND IS FURNISHED FOR THE PURPOSES OF REVIEW, BIDDING OR CONSTRUCTION OF THE PROJECT LISTED IN THE JOB TITLE BOX ABOVE AND SHALL NOT BE USED FOR ANY OTHER PURPOSE OR RELEASED TO ANY OTHER PARTY WITHOUT THE WRITTEN CONSENT OF LPAS, INC. INFORMATION CONTAINED HEREIN IS AN INSTRUMENT OF PROFESSIONAL SERVICES AND SHALL REMAIN THE PROPERTY OF LPAS, INC. ALL RIGHTS RESERVED COPYRIGHT © 2009.

THIS DRAWING IS NOT FINAL OR TO BE USED FOR CONSTRUCTION UNTIL IT IS SIGNED BY THE ARCHITECT AND ENGINEER.

CONSULTANT

STEPHEN RATCHYE
NO. S4860
STRUCTURAL
STATE OF CALIFORNIA

FOUNDATION DETAILS

PROJECT NO: 1102-0005
DATE: 11-17-2017

SHEET NO:

A2.21

CONSTRUCTION SET

LPAS

2484 Natomas Park Drive Suite 100 Sacramento CA 95833
916 443 0335 lpasdesign.com **Architecture + Design**

ORGANIC FARM CLASSROOMS INCREMENT 1

INDIAN VALLEY CAMPUS
COLLEGE OF MARIN

NOVATO, CA

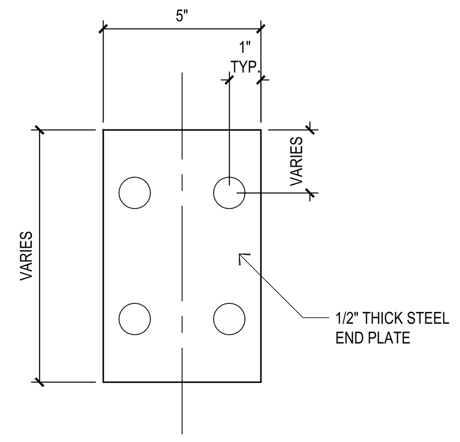

NOTE:
- FOR STEEL WIDE FLANGE BEAM SIZE, SEE PLAN K1, A2.02
- ALL METAL TO BE PAINTED W/ TWO COATS PRIMER AND TWO COATS OF FINISH.
- ALL METAL FASTENERS TO BE GALVANIZED
- SEE DETAIL B7 FOR FURTHER INFORMATION.

BEAM END PLATE — B11
SCALE: 3"=1'-0"

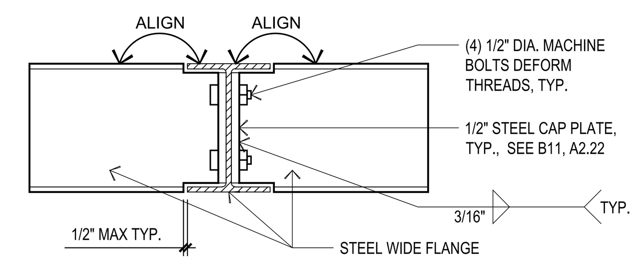

NOTE:
- FOR STEEL WIDE FLANGE BEAM SIZE, SEE PLAN K1, A2.02
- ALL METAL TO BE PAINTED W/ TWO COATS PRIMER AND TWO COATS OF FINISH.
- ALL METAL FASTENERS TO BE GALVANIZED.
- SEE DETAIL B7 FOR FURTHER INFORMATION.

BEAM INTERSECTION - B — B9
SCALE: 1 1/2"=1'-0"

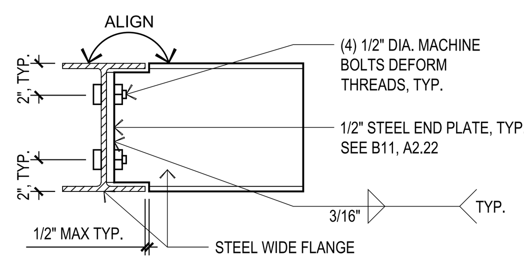

NOTE:
- FOR STEEL WIDE FLANGE BEAM SIZE, SEE PLAN K1, A2.02
- ALL METAL TO BE PAINTED W/ TWO COATS PRIMER AND TWO COATS OF FINISH.
- ALL METAL FASTENERS TO BE GALVANIZED.

BEAM INTERSECTION - A — B7
SCALE: 1 1/2"=1'-0"

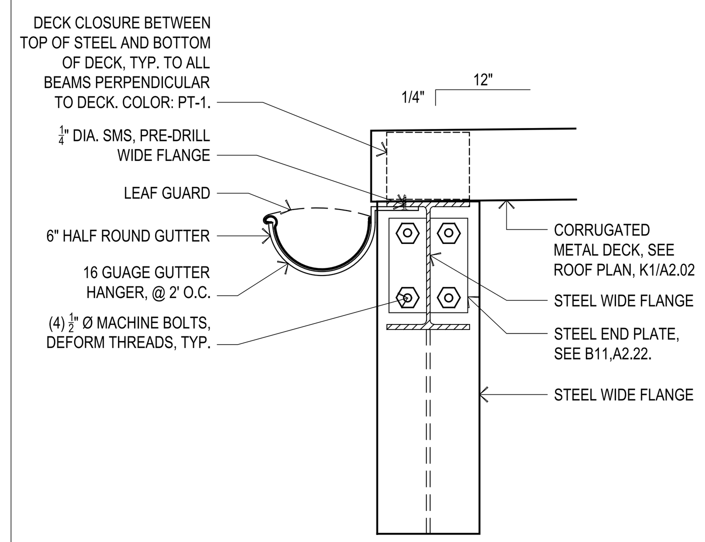

NOTE:
- FOR STEEL WIDE FLANGE BEAM SIZE, SEE PLAN K1, A2.02
- ALL METAL TO BE PAINTED W/ TWO COATS PRIMER AND TWO COATS OF FINISH.
- ALL METAL FASTENERS TO BE GALVANIZED.

ROOF DECKING GUTTER — B5
SCALE: 1 1/2"=1'-0"

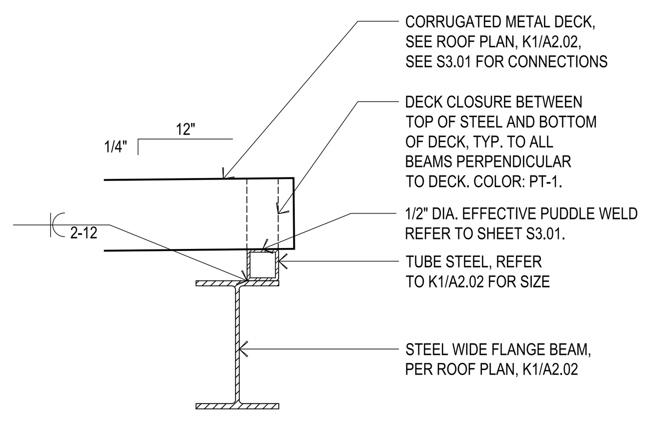

NOTE:
- FOR STEEL WIDE FLANGE BEAM SIZE, SEE PLAN K1, A2.02
- ALL METAL TO BE PAINTED W/ TWO COATS PRIMER AND TWO COATS OF FINISH.
- ALL METAL FASTENERS TO BE GALVANIZED.
- SEE DETAIL B1 FOR FURTHER INFORMATION.

ROOF DECKING SPACER — B3
SCALE: 1 1/2"=1'-0"

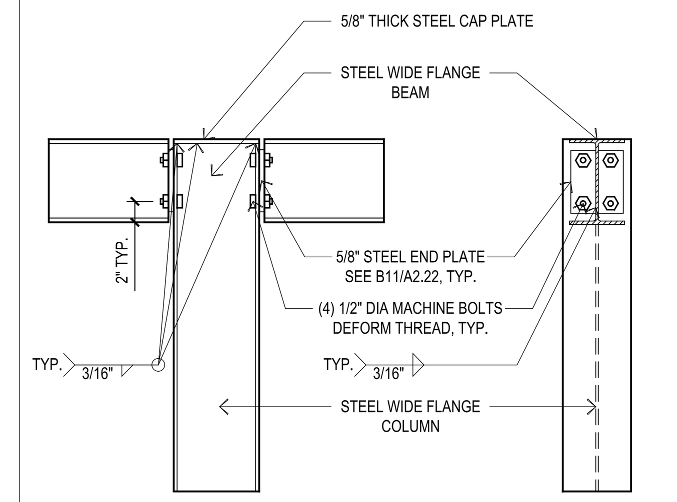

NOTE:
- FOR STEEL WIDE FLANGE BEAM SIZE, SEE PLAN K1, A2.02
- ALL METAL TO BE PAINTED W/ TWO COATS PRIMER AND TWO COATS OF FINISH.
- ALL METAL FASTENERS TO BE GALVANIZED.

TYPICAL POST TO BEAM CONNECTION — B1
SCALE: 1"=1'-0"

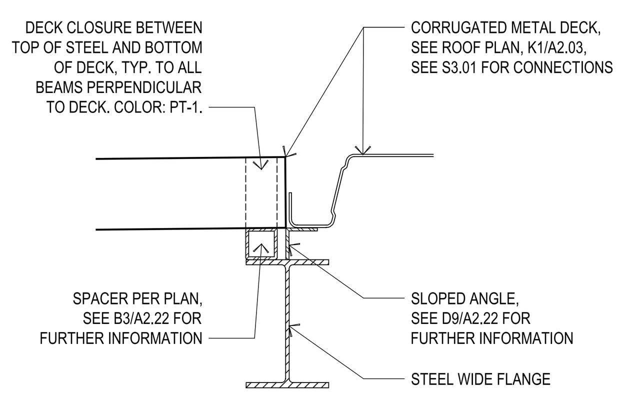

NOTE:
- FOR STEEL WIDE FLANGE BEAM SIZE, SEE PLAN K1, A2.02
- ALL METAL TO BE PAINTED W/ TWO COATS PRIMER AND TWO COATS OF FINISH.
- ALL METAL FASTENERS TO BE GALVANIZED.
- SEE DETAIL B1 FOR FURTHER INFORMATION.

DECKING SPACER AND RUNNING EDGE — D11
SCALE: 1 1/2"=1'-0"

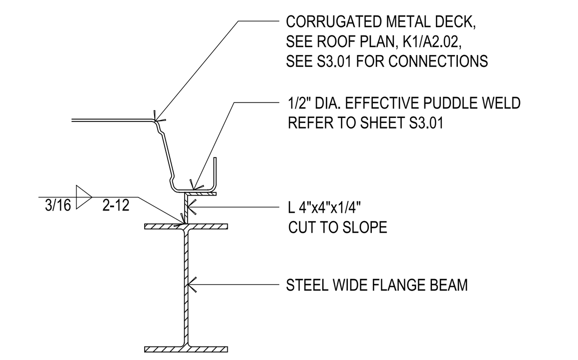

NOTE:
- FOR STEEL WIDE FLANGE BEAM SIZE, SEE PLAN K1, A2.02
- ALL METAL TO BE PAINTED W/ TWO COATS PRIMER AND TWO COATS OF FINISH.
- ALL METAL FASTENERS TO BE GALVANIZED.
- SEE DETAIL B1 FOR FURTHER INFORMATION.

SLOPED RUNNING EDGE — D9
SCALE: 1 1/2"=1'-0"

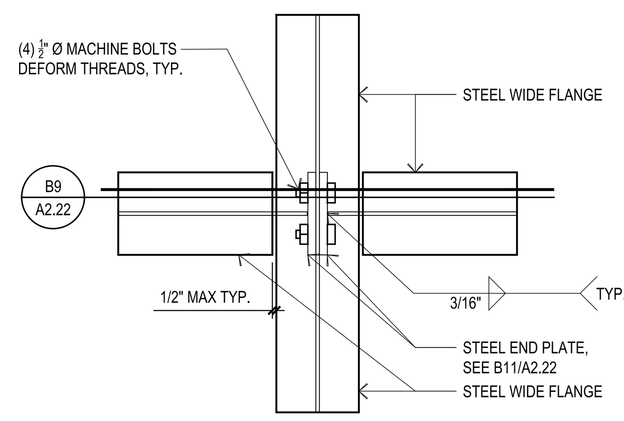

NOTE:
- FOR STEEL WIDE FLANGE BEAM SIZE, SEE PLAN K1, A2.02
- ALL METAL TO BE PAINTED W/ TWO COATS PRIMER AND TWO COATS OF FINISH.
- ALL METAL FASTENERS TO BE GALVANIZED.
- SEE DETAIL B7 FOR FURTHER INFORMATION

BEAM CONNECTION - D — D7
SCALE: 1 1/2"=1'-0"

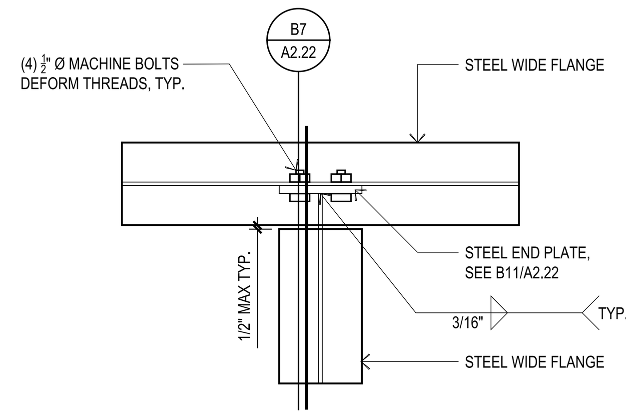

NOTE:
- FOR STEEL WIDE FLANGE BEAM SIZE, SEE PLAN K1, A2.02
- ALL METAL TO BE PAINTED W/ TWO COATS PRIMER AND TWO COATS OF FINISH.
- ALL METAL FASTENERS TO BE GALVANIZED.
- SEE DETAIL B7 FOR FURTHER INFORMATION

BEAM CONNECTION - C — D5
SCALE: 1 1/2"=1'-0"

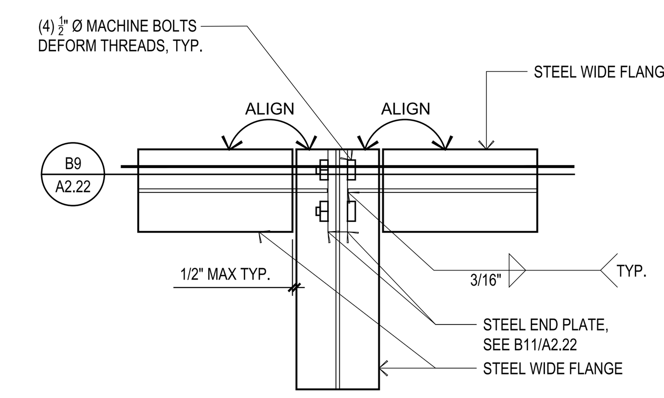

NOTE:
- FOR STEEL WIDE FLANGE BEAM SIZE, SEE PLAN K1, A2.02
- ALL METAL TO BE PAINTED W/ TWO COATS PRIMER AND TWO COATS OF FINISH.
- ALL METAL FASTENERS TO BE GALVANIZED.
- SEE DETAIL B7 FOR FURTHER INFORMATION.

BEAM CONNECTION - B — D3
SCALE: 1 1/2"=1'-0"

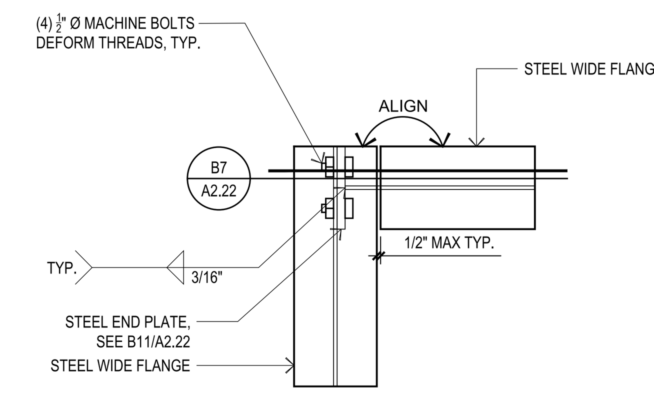

NOTE:
- FOR STEEL WIDE FLANGE BEAM SIZE, SEE PLAN K1, A2.02
- ALL METAL TO BE PAINTED W/ TWO COATS PRIMER AND TWO COATS OF FINISH.
- ALL METAL FASTENERS TO BE GALVANIZED.
- SEE DETAIL B7 FOR FURTHER INFORMATION

BEAM CONNECTION - A — D1
SCALE: 1 1/2"=1'-0"

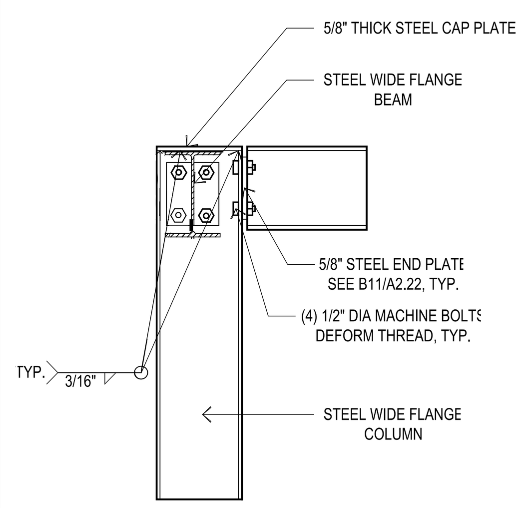

NOTE:
- FOR STEEL WIDE FLANGE BEAM SIZE, SEE PLAN K1, A2.02
- ALL METAL TO BE PAINTED W/ TWO COATS PRIMER AND TWO COATS OF FINISH.
- ALL METAL FASTENERS TO BE GALVANIZED.

TYPICAL POST TO BEAM CONNECTION — F9
SCALE: 1"=1'-0"

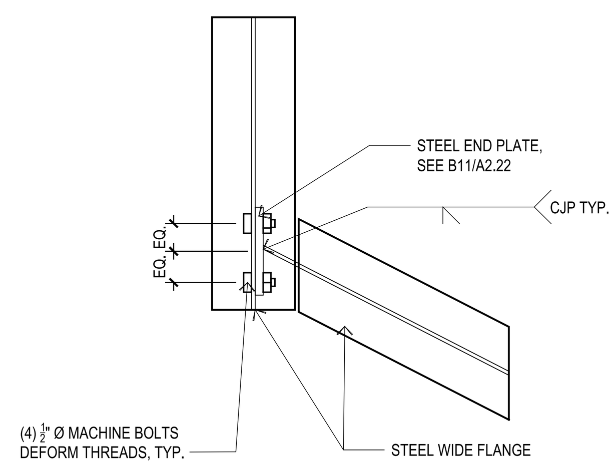

NOTE:
- FOR STEEL WIDE FLANGE BEAM SIZE, SEE PLAN K1, A2.02
- ALL METAL TO BE PAINTED W/ TWO COATS PRIMER AND TWO COATS OF FINISH.
- ALL METAL FASTENERS TO BE GALVANIZED.
- SEE DETAIL B7 FOR FURTHER INFORMATION.

SKEWED BEAM CONNECTION - H — F7
SCALE: 1 1/2"=1'-0"

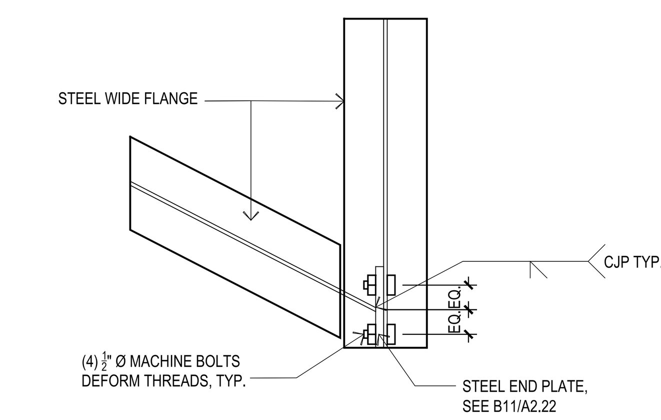

NOTE:
- FOR STEEL WIDE FLANGE BEAM SIZE, SEE PLAN K1, A2.02
- ALL METAL TO BE PAINTED W/ TWO COATS PRIMER AND TWO COATS OF FINISH.
- ALL METAL FASTENERS TO BE GALVANIZED.
- SEE DETAIL B7 FOR FURTHER INFORMATION.

SKEWED BEAM CONNECTION - G — F5
SCALE: 1 1/2"=1'-0"

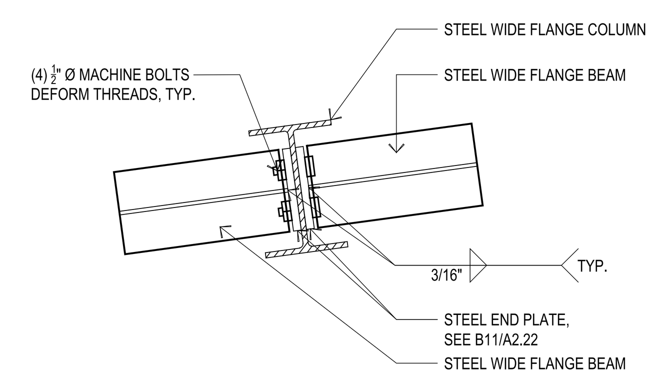

NOTE:
- FOR STEEL WIDE FLANGE BEAM SIZE, SEE PLAN K1, A2.02
- ALL METAL TO BE PAINTED W/ TWO COATS PRIMER AND TWO COATS OF FINISH.
- ALL METAL FASTENERS TO BE GALVANIZED.
- SEE DETAIL B1 FOR FURTHER INFORMATION.

BEAM CONNECTION - F — F3
SCALE: 1 1/2"=1'-0"

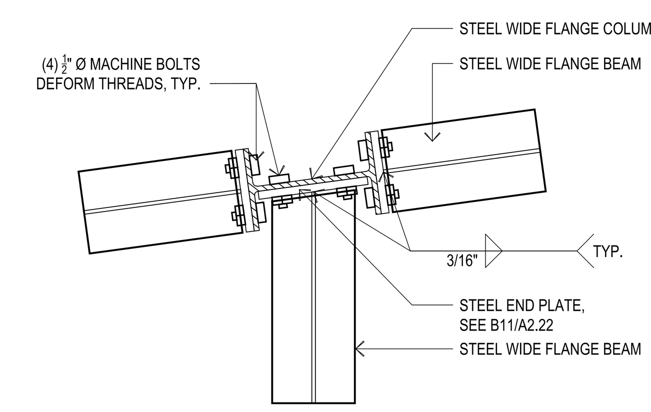

NOTE:
- FOR STEEL WIDE FLANGE BEAM SIZE, SEE PLAN K1, A2.02
- ALL METAL TO BE PAINTED W/ TWO COATS PRIMER AND TWO COATS OF FINISH.
- ALL METAL FASTENERS TO BE GALVANIZED.
- SEE DETAIL B1 FOR FURTHER INFORMATION.

BEAM CONNECTION - E — F1
SCALE: 1 1/2"=1'-0"

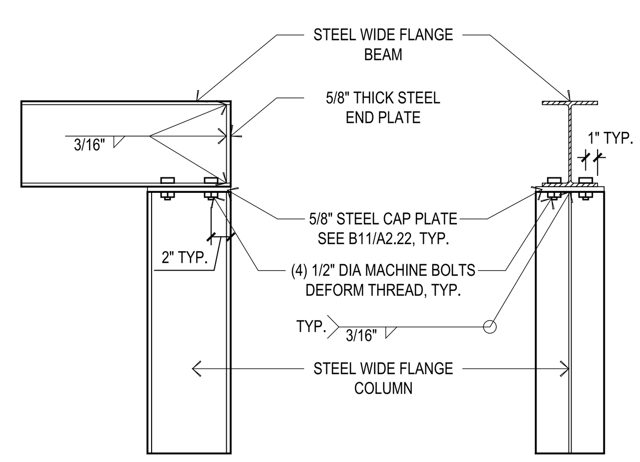

NOTE:
- FOR STEEL WIDE FLANGE BEAM SIZE, SEE PLAN K1, A2.02
- ALL METAL TO BE PAINTED W/ TWO COATS PRIMER AND TWO COATS OF FINISH.
- ALL METAL FASTENERS TO BE GALVANIZED.
- TRANSVERSE BEAMS NOT SHOWN FOR CLARITY. SEE B7 FOR TRANSVERSE BEAM CONNECTIONS.

CANTILEVER POST TO BEAM CONNECTION — H7
SCALE: 1"=1'-0"

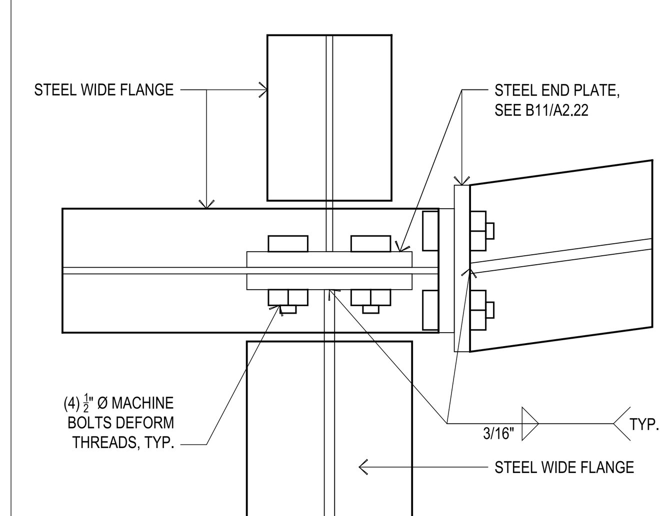

NOTE:
- FOR STEEL WIDE FLANGE BEAM SIZE, SEE PLAN K1, A2.02
- ALL METAL TO BE PAINTED W/ TWO COATS PRIMER AND TWO COATS OF FINISH.
- ALL METAL FASTENERS TO BE GALVANIZED.
- SEE DETAIL B7 FOR FURTHER INFORMATION

BEAM CONNECTION ENLARGEMENT — H5
SCALE: 3"=1'-0"

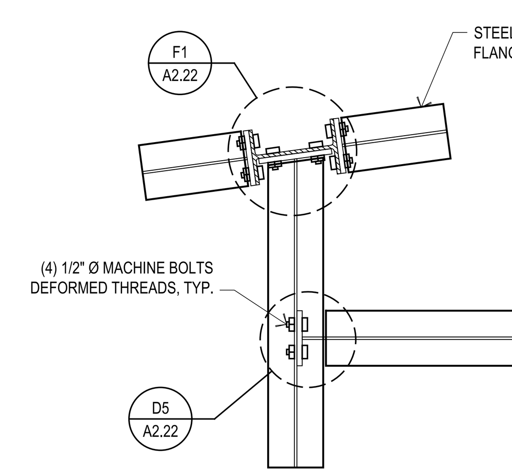

NOTE:
- FOR STEEL WIDE FLANGE BEAM SIZE, SEE PLAN K1, A2.02
- ALL METAL TO BE PAINTED W/ TWO COATS PRIMER AND TWO COATS OF FINISH.
- ALL METAL FASTENERS TO BE GALVANIZED.

BEAM ENLARGEMENT PLAN - B — H3
SCALE: 1"=1'-0"

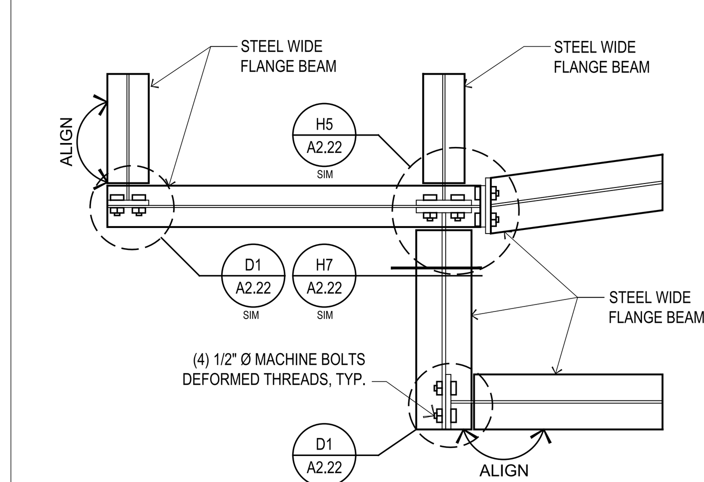

NOTE:
- FOR STEEL WIDE FLANGE BEAM SIZE, SEE PLAN K1, A2.02
- ALL METAL TO BE PAINTED W/ TWO COATS PRIMER AND TWO COATS OF FINISH.
- ALL METAL FASTENERS TO BE GALVANIZED.

BEAM ENLARGEMENT PLAN - A — H1
SCALE: 1"=1'-0"

FILE NUMBER: 21-C1

IDENTIFICATION STAMP DIVISION OF THE STATE ARCHITECT	
01 - 116913	INCR: 1
AC RE FLS ED SSR CD	
DATE 01/12/2018	

ARCHITECT'S STAMP

APPROVAL

THIS DOCUMENT CONTAINS INFORMATION THAT IS PROPRIETARY TO LPAS, INC. AND IS FURNISHED FOR THE PURPOSES OF REVIEW, BIDDING OR CONSTRUCTION OF THE PROJECT LISTED IN THE JOB TITLE BOX ABOVE AND SHALL NOT BE USED FOR ANY OTHER PURPOSE OR RELEASED TO ANY OTHER PARTY WITHOUT THE WRITTEN CONSENT OF LPAS, INC. INFORMATION CONTAINED HEREIN IS AN INSTRUMENT OF PROFESSIONAL SERVICES AND SHALL REMAIN THE PROPERTY OF LPAS, INC. ALL RIGHTS RESERVED COPYRIGHT © 2009.

THIS DRAWING IS NOT FINAL OR TO BE USED FOR CONSTRUCTION UNTIL IT IS SIGNED BY THE ARCHITECT AND ENGINEER.

CONSULTANT

STRUCTURE DETAILS

PROJECT NO: 1102-0005
DATE: 11-17-2017

SHEET NO:

A2.22

CONSTRUCTION SET

SYMBOLS LIST

SOME OF THESE SYMBOLS SHOWN MAY NOT BE USED ON THIS PROJECT

POWER DISTRIBUTION

- SWITCHBOARD, DISTRIBUTION BOARD, SUBSTATION OR MOTOR CONTROL CENTER, FLOOR MOUNTED.
- PANELBOARD, 277/480V, SURFACE MOUNTED ON WALL.
- PANELBOARD, 277/480V, FLUSH MOUNTED IN WALL.
- PANELBOARD, 120/208V, SURFACE MOUNTED ON WALL.
- PANELBOARD, 120/208V, FLUSH MOUNTED IN WALL.
- DRY-TYPE STEP-DOWN TRANSFORMER, FLOOR MOUNTED 3Ø,480-120/208V, UON.
- ELECTRIC MOTOR, NIEC. MAKE POWER CONNECTIONS ONLY AS NOTED ON PLANS.
- F — INDOOR EXHAUST FAN MOTOR, SINGLE PHASE. MAKE POWER CONNECTIONS TO INCLUDE JUNCTION BOX MOUNTED MANUAL MOTOR STARTER AND DISCONNECT ADJACENT TO FAN WITH 2 #12 CONDUCTORS PLUS GROUND IN 1/2" FLEXIBLE CONDUIT BETWEEN STARTER AND MOTOR.
- V — INDOOR FAN POWERED VAV BOX MOTOR, SINGLE PHASE, MOUNTED FROM STRUCTURE ABOVE, NIEC. MAKE POWER CONNECTIONS TO INCLUDE JUNCTION BOX MOUNTED MANUAL MOTOR STARTER AND DISCONNECT ADJACENT TO VAV BOX WITH 2 #12 CONDUCTORS PLUS GROUND IN 1/2" FLEXIBLE CONDUIT BETWEEN STARTER AND MOTOR.
- P — PULLBOX OR HANDHOLE, SIZE AND TYPE AS NOTED ON PLANS.
- A / AF — SAFETY DISCONNECT SWITCH, 3 POLE, UON. ADJACENT NUMBER INDICATES FUSE SIZE WHEN APPLICABLE. LABELING CONVENTION AS FOLLOWS:

A: 30A, NON-FUSED	AF: 30A, FUSED
B: 60A, NON-FUSED	BF: 60A, FUSED
C: 100A, NON-FUSED	CF: 100A, FUSED
D: 200A, NON-FUSED	DF: 200A, FUSED
E: 400A, NON-FUSED	EF: 400A, FUSED
F: 600A, NON-FUSED	FF: 600A, FUSED
G: 800A, NON-FUSED	GF: 800A, FUSED

- 1 — MAGNETIC MOTOR STARTER. ADJACENT NUMBER INDICATES NEMA SIZE OF STARTER.
- 1 — COMBINATION MAGNETIC MOTOR STARTER/SAFETY DISCONNECT SWITCH. ADJACENT NUMBER INDICATES NEMA SIZE OF STARTER.
- PACKAGE MOTOR CONTROLLER OR STARTER FURNISHED AND INSTALLED UNDER ANOTHER DIVISION WITH EQUIPMENT CONTROLLED. PROVIDE SINGLE-POINT POWER SERVICE CONNECTION UNDER THIS DIVISION AS NOTED ON PLANS.
- VFD — VARIABLE FREQUENCY DRIVE FURNISHED AND INSTALLED UNDER ANOTHER DIVISION. PROVIDE POWER SERVICE CONNECTION UNDER THIS DIVISION AS NOTED ON PLANS.
- VFD — VARIABLE FREQUENCY DRIVE WITH INTEGRAL DISCONNECT FURNISHED AND INSTALLED UNDER ANOTHER DIVISION. PROVIDE POWER SERVICE CONNECTION UNDER THIS DIVISION AS NOTED ON PLANS.
- DRIVEN GROUND ROD.
- DRIVEN GROUND ROD IN GROUND WELL WITH COVER.
- ELECTRICAL VEHICLE CHARGING STATION, WALL MOUNTED.
- ELECTRICAL VEHICLE CHARGING STATION, PEDESTAL MOUNTED.
- 2,4,6 — BRANCH CIRCUIT POWER DISTRIBUTION BOX OF MANUFACTURED WIRING SYSTEM WITH MODULAR CONNECTORS FOR INTERFACE TO BRANCH CIRCUIT MODULAR CABLE SETS AND CABLE OR CONDUIT HOMERUN. BOX MOUNTED FROM STRUCTURE ABOVE IN ACCESSIBLE CEILING SPACE. ADJACENT NUMBERS INDICATE CIRCUITS AVAILABLE AT BOX.
- 2,4,6 — DEVICE BRANCH CIRCUIT POWER DISTRIBUTION BOX FOR INTERFACE BETWEEN MULTI-CIRCUIT HOMERUN AND MC CABLE BRANCH CIRCUITING. MINIMUM BOX SIZE IS 10"X10"X4" DEEP. BOX MOUNTED FROM STRUCTURE ABOVE IN ACCESSIBLE CEILING SPACE. ADJACENT NUMBERS INDICATE CIRCUITS AVAILABLE AT BOX.
- INDICATES CABLE TERMINATION LUGS AT EQUIPMENT BUS.
- BOLTED PRESSURE OR HIGH PRESSURE CONTACT SWITCH.
- FUSED SWITCH.
- MEDIUM-VOLTAGE LOAD INTERRUPTER SWITCH.
- GROUP MOUNTED MOLDED CASE CIRCUIT BREAKER.
- INDIVIDUALLY FIXED MOUNTED INSULATED-CASE OR POWER CIRCUIT BREAKER.
- INDIVIDUALLY DRAW-OUT MOUNTED INSULATED-CASE OR POWER CIRCUIT BREAKER.
- 52 — MEDIUM-VOLTAGE, INDIVIDUALLY DRAW-OUT MOUNTED VACUUM CIRCUIT BREAKER.
- G — INDICATES INTEGRAL GROUND FAULT RELAY WHEN ASSOCIATED WITH CIRCUIT BREAKER.
- C — INDICATES COMMUNICATION NETWORK WIRING WHEN ASSOCIATED WITH CIRCUIT BREAKER.
- EO — INDICATES ELECTRICALLY OPERATED WHEN ASSOCIATED WITH CIRCUIT BREAKER.
- ST — INDICATES SHUNT TRIP WHEN ASSOCIATED WITH OVERCURRENT PROTECTION DEVICES.
- K 1 — INDICATES KIRK-KEY INTERLOCK WHEN ASSOCIATES WITH OVERCURRENT PROTECTION DEVICES. ADJACENT NUMBER CORRESPONDS WITH DEVICE INTERLOCK.
- GFR — GROUND FAULT RELAY WITH SHUNT TRIP.
- GFA — GROUND FAULT ALARM, NO SHUNT TRIP.
- M — UTILITY METER.
- TRANSFORMER.
- CONNECTION TO GROUND.
- CURRENT TRANSFORMERS.
- POTENTIAL TRANSFORMERS.
- V — AUTOMATIC OR MANUAL TRANSFER SWITCH.
- NORM. EM. — AUTOMATIC TRANSFER/BY-PASS ISOLATION SWITCH.
- G — EMERGENCY GENERATOR.
- BATTERIES.
- NEUTRAL SERVICE DISCONNECT LINK.
- SPD — SURGE PROTECTION DEVICE, 'SPD'.
- C — CONTROL CONTACTOR.
- NORMALLY OPEN CONTACT.
- NORMALLY CLOSED CONTACT.
- DMU — DIGITAL METERING UNIT.
- WHM — WATT HOUR METER.
- GND — GROUND BUS.
- NEU — NEUTRAL BUS.

WIRING DEVICES

- J — JUNCTION BOX, WALL MOUNTED, +18" UON. 15" BOTTOM OF BOX MIN.
- J — JUNCTION BOX, MOUNTED IN FLUSH FLOOR BOX.
- J — JUNCTION BOX, MOUNTED FLUSH IN CEILING.
- J — JUNCTION BOX, SURFACE OR PENDANT MOUNTED TO STRUCTURE IN ACCESSIBLE CEILING SPACE.
- J — JUNCTION BOX, MOUNTED ON CONDUIT STANCHION FLOOR PENETRATION, +18" UON. 15" B.O. BOX MIN.
- SINGLE-PLEX CONVENIENCE RECEPTACLE DEVICE, WALL MOUNTED, +18" UON 15" B.O. BOX MIN.
- IG — 'IG' DENOTES ISOLATED GROUND. DUPLEX CONVENIENCE RECEPTACLE DEVICE, WALL MOUNTED, +18" UON. 15" B.O. BOX MIN.
- DOUBLE DUPLEX CONVENIENCE RECEPTACLE DEVICE, WALL MOUNTED, +18" UON. 15" B.O. BOX MIN.
- DENOTES WALL MOUNTED OVER COUNTER, 6" ABOVE BACK SPLASH UON.
- G — 'G' DENOTES GROUND FAULT CURRENT INTERRUPTER (GFCI), 'A' DENOTES ARC FAULT CURRENT INTERRUPTER (AFCI).
- WP — DUPLEX RECEPTACLE, WEATHER RESISTANT WITH GROUND FAULT CURRENT INTERRUPTER 'GFCI', WITH WEATHERPROOF COVER, WALL MOUNTED, +18" UON.
- SHADING DENOTES SPLIT WIRED DEVICE.
- SHADING DENOTES DEVICE CONNECTED TO EMERGENCY POWER CIRCUIT.
- SHADING DENOTES CONTROLLED RECEPTACLE.
- SHADING DENOTES SPECIALTY DEVICE, TYPE AS NOTED ON PLANS.
- DUPLEX CONVENIENCE RECEPTACLE DEVICE, MOUNTED IN FLUSH FLOOR BOX.
- DOUBLE DUPLEX CONVENIENCE RECEPTACLE DEVICE, MOUNTED IN FLUSH FLOOR BOX.
- DUPLEX CONVENIENCE RECEPTACLE DEVICE, MOUNTED IN FIRE-RATED POKE-THRU FLOOR FITTING.
- DOUBLE DUPLEX CONVENIENCE RECEPTACLE DEVICE, MOUNTED IN FIRE-RATED POKE-THRU FLOOR FITTING.
- DUPLEX CONVENIENCE RECEPTACLE DEVICE, MOUNTED FLUSH IN CEILING.
- DOUBLE DUPLEX CONVENIENCE RECEPTACLE DEVICE, MOUNTED FLUSH IN CEILING.
- DUPLEX CONVENIENCE RECEPTACLE DEVICE, MOUNTED ON CONDUIT STANCHION FLOOR PENETRATION, +12" UON.
- DUPLEX CONVENIENCE RECEPTACLE DEVICE, MOUNTED IN FLOOR MONUMENT.
- COMBINATION POWER/TELECOMMUNICATION DEVICE, MOUNTED IN FLUSH FLOOR BOX. TYPE AS NOTED ON PLANS OR IN SPECIFICATIONS.
- DUPLEX CONVENIENCE RECEPTACLE DEVICE, CORD OR REEL HUNG FROM STRUCTURE ABOVE. TYPE AS NOTED ON PLANS.
- P — ELECTRIFIED FURNITURE PARTITION POWER FEED, WALL MOUNTED, +18" UON. CONSISTS OF 4 11/16" SQ. X 2 1/8" DEEP. JUNCTION BOX, SINGLE GANG RING, AND STAINLESS STEEL COVER PLATE WITH KO TO ACCEPT FURNITURE WHIP.
- P T — ELECTRIFIED FURNITURE PARTITION COMBINATION POWER/TELECOMMUNICATION FEEDS, MOUNTED IN FLUSH FLOOR BOX WITH KO'S IN COVER TO ACCEPT FURNITURE WHIPS
- P — ELECTRIFIED FURNITURE PARTITION POWER FEED, MOUNTED IN FIRE-RATED POKE-THRU FLOOR FITTING WITH KO IN COVER TO ACCEPT FURNITURE WHIP.
- POWER/TELECOMMUNICATION POLE, MOUNTED TO EXTEND FROM FLOOR TO CEILING. TYPE AS NOTED ON PLANS.
- S — SINGLE-POLE, SINGLE-THROW SWITCH, WALL MOUNTED, +42" UON. 48" TOP OF BOX MAX.
- S^3 — THREE-WAY SWITCH, WALL MOUNTED, +42" UON. 48" TOP OF BOX MAX.
- S^4 — FOUR-WAY SWITCH, WALL MOUNTED, +42" UON. 48" TOP OF BOX MAX.
- S^K — KEY-OPERATED, SINGLE-POLE, SINGLE-THROW SWITCH, WALL MOUNTED, +42" UON. 48" T.O. BOX MAX.
- S^P — PILOT LIGHT, SINGLE-POLE, SINGLE-THROW SWITCH, WALL MOUNTED, +42" UON 48" T.O. BOX MAX.
- S^T — MANUAL MOTOR STARTER SWITCH WITH THERMAL OVERLOAD ELEMENT, MOUNTED ADJACENT TO MOTOR.
- S^M — MANUAL MOTOR STARTER/DISCONNECT SWITCH, MOUNTED ADJACENT TO MOTOR.
- S^F — SWITCH FURNISHED UNDER ANOTHER DIVISION, BUT INSTALLED AND WIRED UNDER THIS DIVISION, WALL MOUNTED, +42" UON.
- S^D — WALL BOX DIMMER SWITCH, +42" UON. SIZED PER CONNECTED LOAD ON PLANS AND FURNISHED FOR LAMP SOURCE SERVED. PROVIDED FOR DE-RATING WHEN INSTALLED GANGED LOCATIONS.
- S^{TC} — SINGLE-POLE, TIMER CONTROLLED SWITCH, WALL MOUNTED, +42" UON.
- S^{EP} — SINGLE-POLE, SINGLE-THROW, EXPLOSION PROOF SWITCH, WALL MOUNTED, +42" UON.
- S — LINE-VOLTAGE MULTIPLE GANG SWITCHING STATION, WALL MOUNTED, 42" UON. REFER TO PLANS FOR DEVICE QUANTITIES AND TYPES.
- L — LOW-VOLTAGE LIGHTING CONTROL SWITCHING STATION, WALL MOUNTED, +42" UON. REFER TO PLANS AND SCHEDULES FOR DEVICE QUANTITIES AND RELAYS CONTROLLED
- M — LIGHTING CONTROL OCCUPANCY SENSOR WITH DUAL LEVEL SWITCHING, WALL MOUNTED, +42" UON.
- M1 — LIGHTING CONTROL OCCUPANCY SENSOR WITH SINGLE LEVEL SWITCHING, WALL MOUNTED, +42" UON.
- M — LIGHTING CONTROL OCCUPANCY SENSOR, CEILING MOUNTED FOR AREA COVERAGE.
- D — PRESET SCENE CONTROL LIGHTING STATION WITH DIMMING CAPABILITIES, WALL MOUNTED, +42" UON. REFER TO PLANS AND SCHEDULES FOR CONTROL.
- ETD — EGRESS LIGHTING TRANSFER DEVICE
- CONTROL STATION, WALL MOUNTED, +42" UON.
- PC — PHOTOELECTRIC CELL
- DS — DAYLIGHT SENSOR

B.O.	BOTTOM OF
T.O.	TOP OF

LIGHTING

- LIGHT FIXTURE, RECESSED IN CEILING.
- LIGHT FIXTURE, SURFACE OR PENDANT MOUNTED.
- LIGHT FIXTURE, WALL MOUNTED.
- STRIP LIGHT FIXTURE, SURFACE OR PENDANT MOUNTED.
- STRIP LIGHT FIXTURE, SURFACE MOUNTED IN ARCHITECTURAL CEILING COVE.
- STRIP LIGHT FIXTURE, SURFACE MOUNTED VERTICALLY ON WALL OR IN COVE.
- DOWNLIGHT FIXTURE, RECESSED IN CEILING.
- DOWNLIGHT/INDUSTRIAL FIXTURE, SURFACE OR PENDANT MOUNTED.
- SINGLE DIRECTIONAL, WALLWASH LIGHT FIXTURE, RECESSED IN CEILING.
- DUAL DIRECTIONAL, WALLWASH LIGHT FIXTURE, RECESSED IN CEILING.
- SINGLE DIRECTIONAL, WALLWASH LIGHT FIXTURE, SURFACE OR PENDANT MOUNTED.
- DUAL DIRECTIONAL, WALLWASH LIGHT FIXTURE, SURFACE OR PENDANT MOUNTED.
- ADJUSTABLE ACCENT LIGHT FIXTURE, RECESSED IN CEILING.
- ADJUSTABLE ACCENT LIGHT FIXTURE, SURFACE OR PENDANT MOUNTED.
- LINEAR WALLWASH LIGHT FIXTURE, RECESSED IN CEILING.
- LINEAR WALLWASH LIGHT FIXTURE, SURFACE OR PENDANT MOUNTED.
- LINEAR, MULTI-HEAD, ADJUSTABLE ACCENT LIGHT FIXTURES, RECESSED IN CEILING.
- SCONCE LIGHT FIXTURE, WALL MOUNTED.
- DECORATIVE CHANDELIER OR BOWL TYPE FIXTURE, PENDANT MOUNTED.
- J — LINEAR TRACK SYSTEM WITH PLUG-IN ADJUSTABLE LIGHT FIXTURE HEADS. TRACK SHALL BE EITHER RECESSED, SURFACE OR PENDANT MOUNTED TO CEILING AS NOTED IN FIXTURE SCHEDULE.
- EXIT SIGN LIGHT FIXTURE, CEILING OR WALL MOUNTED WITH DIRECTIONAL ARROWS AS NOTED ON PLANS. WORD 'EXIT' TO BE LOCATED IN SHADED FACE(S).
- COMBO EXIT SIGN AND EGRESS LIGHTING FIXTURE, CEILING OR WALL MOUNTED WITH ARROWS AS NOTED ON PLANS OR IN FIXTURE SCHEDULE.
- EMERGENCY SELF-POWERED BATTERY PACK WITH LIGHT FIXTURE HEADS AS NOTED ON PLANS OR IN FIXTURE SCHEDULE.
- HALF SHADING OF ANY FIXTURE INDICATES LIFE SAFETY/EGRESS LIGHTING.
- FULL SHADING OF ANY FIXTURE INDICATES STANDBY/CRITICAL LIGHTING.

EXTERIOR:

- SINGLE-HEAD AREA LIGHT FIXTURE WITH BRACKET ARM AND POLE, MOUNTED TO CONCRETE BASE.
- TWO-HEAD AREA LIGHT FIXTURES WITH BRACKET ARMS AND POLE, MOUNTED TO CONCRETE BASE.
- SINGLE-HEAD AREA POST-TOP LIGHT FIXTURE WITH POLE, MOUNTED TO CONCRETE BASE.
- AREA LIGHT FIXTURE, SURFACE OR RECESSED MOUNTED TO WALL.
- LIGHT FIXTURE BOLLARD, MOUNTED TO CONCRETE BASE.
- GROUND WELL MOUNTED FLUSH IN FINISHED GRADE.
- FLOODLIGHT FIXTURE, STANCHION MOUNTED ABOVE GRADE.
- LINEAR SIGN LIGHT FIXTURE, STANCHION MOUNTED ABOVE GRADE.
- STEPLIGHT FIXTURE, WALL MOUNTED.

RACEWAYS

- CONDUIT RUN EXPOSED ON WALL OR CEILING.
- CONDUIT RUN CONCEALED IN SLAB, UNDER SLAB OR UNDERGROUND.
- CONDUIT RUN CONCEALED IN WALL OR ABOVE CEILING.
- CONDUIT HOMERUN, CONTINUOUS RUN TO PANEL OR EQUIPMENT CABINET.
- FLEXIBLE METALLIC CONDUIT.
- CONDUIT TURNED UP
- CONDUIT TURNED DOWN.
- CONDUIT CAPPED OR STUBBED WITH INSULATED BUSHINGS.
- CONDUIT SLEEVE, WITH INSULATING BUSHINGS.
- CROSSMARKS ON BRANCH CIRCUIT CONDUIT RUNS INDICATE THE QUANTITY OF CONDUCTORS AS FOLLOWS (GROUND CONDUCTORS ARE NOT NOTED, BUT SHOULD BE INCLUDED IN EVERY CONDUIT WITH POWER CONDUCTORS):
  1. NO CROSSMARKS INDICATES TWO #12 AWG CONDUCTORS, UON.
  2. THREE TO SIX CROSSMARKS INDICATES THE QUANTITY OF #12 AWG CONDUCTORS, UON.
  3. SEVEN OR MORE CROSSMARKS INDICATES THE QUANTITY OF #10 AWG CONDUCTORS, UON.
- MULTI-OUTLET TWO PIECE SURFACE RACEWAY; TYPE, DEVICE SPACING AND MOUNTING AS NOTED ON PLANS.
- TWO PIECE SURFACE METAL RACEWAY, MOUNTED AS NOTED IN PLANS.
- CABLE TRAY, CABLE RUNWAY OR LADDER RACK SUSPENDED FROM STRUCTURE ABOVE. REFER TO PLANS FOR SIZE AND MOUNTING.

CONVENTIONS

- 1 — NUMBERED NOTE, APPLIES TO ALL DRAWINGS.
- 1 — NUMBERED SHEET NOTE, APPLIES TO DRAWING CONTAINING NOTES ONLY.
- 1 — OVERCURRENT PROTECTIVE DEVICE SPACE IDENTIFICATION TAG. REFERS TO LOCATION OF PROTECTIVE OR CONTROL DEVICE WITHIN SWITCHBOARDS, DISTRIBUTION BOARDS, MOTOR CONTROL CENTERS, ETC.
- NAME — EQUIPMENT IDENTIFICATION TAG: ITEM FURNISHED AND INSTALLED UNDER ANOTHER SECTION AND WIRED UNDER THIS SECTION.
- P2 — CABLE AND/OR RACEWAY TAG, FUNCTION AS NOTED BELOW:
  P = POWER T = TELEPHONE C = COMMUNICATION
- 2004 — FEEDER SIZE. REFER TO FEEDER SCHEDULE.
- A / EXX.XX — DETAIL REFERENCE: SHEET NUMBER; DETAIL DESIGNATION
- 2-F3 — FIXTURE IDENTIFICATION TAG: FIXTURE TYPE; QUANTITY

TELECOMMUNICATION

- W — TELECOMMUNICATION DEVICE, WALL MOUNTED AT +42".
- TELECOMMUNICATION DEVICE, WALL MOUNTED, +18" UON.
- TELECOMMUNICATION DEVICE, WALL MOUNTED OVER COUNTER, 6" ABOVE BACK SPLASH, UON.
- TELECOMMUNICATION DEVICE, MOUNTED IN FLUSH FLOOR BOX.
- TELECOMMUNICATION DEVICE, MOUNTED IN FIRE-RATED POKE-THRU FLOOR FITTING.
- TELECOMMUNICATION DEVICE, MOUNTED IN FLOOR MONUMENT.
- TELECOMMUNICATION DEVICE, MOUNTED ABOVE ACCESSIBLE CEILING IN SURFACE MOUNT BOX.
- COMBINATION POWER/TELECOMMUNICATION DEVICES, MOUNTED IN FLUSH FLOOR BOX. TYPE AS NOTED ON PLANS OR IN SPECIFICATIONS.
- COMBINATION POWER/TELECOMMUNICATION DEVICES, MOUNTED IN FIRE-RATED POKE-THRU FLOOR FITTINGS. TYPE AS NOTED ON PLANS OR IN SPECIFICATIONS.
- T — ELECTRIFIED FURNITURE PARTITION TELECOMMUNICATION CABLE FEED, WALL MOUNTED, +18" UON. CONSISTS OF 4 11/16" SQ. X 2 1/8" DEEP. JUNCTION BOX, SINGLE GANG RING, AND STAINLESS STEEL COVERPLATE WITH 1 1/4" KO AND GROMMET. WRAP EXPOSED CABLE WITH SPIRAL WRAP.
- P T — ELECTRIFIED FURNITURE PARTITION COMBINATION POWER/TELECOMMUNICATION FEEDS, MOUNTED IN FLUSH FLOOR BOX WITH KO'S IN COVERS TO ACCEPT FURNITURE WHIPS. TELECOMMUNICATIONS WHIP SHALL BE 1 1/4" MINIMUM.
- T — ELECTRIFIED FURNITURE PARTITION TELECOMMUNICATION CABLE FEEDS, MOUNTED IN FIRE-RATED POKE-THRU THRU FLOOR FITTING WITH 1 1/4" KO'S IN COVER TO ACCEPT FURNITURE WHIPS.
- WAP — WIRELESS ACCESS POINT, WALL MOUNTED, 8" BFC UON.
- WAP — WIRELESS ACCESS POINT, CEILING MOUNTED.
- #D/#V — QUANTITY OF DATA AND/OR VOICE TELECOMMUNICATIONS DEVICES.

FIRE ALARM

- SMOKE DETECTOR INITIATING DEVICE, CEILING MOUNTED ON FLUSH OR SURFACE JUNCTION BOX.
- SMOKE DETECTOR INITIATING DEVICE, STRUCTURE MOUNTED ABOVE SUSPENDED CEILING TO SURFACE JUNCTION BOX.
- SMOKE DETECTOR INITIATING DEVICE, DUCT-MOUNTED TYPE WITH SAMPLING TUBE, LOCATED AT SUPPLY AIR FANS 2000cfm AND LARGER.
- SMOKE DETECTOR INITIATING DEVICE, IN-DUCT MOUNTED TYPE AT, DUCTED FSD'S.
- BT / BR — PROJECTED BEAM SMOKE DETECTOR INITIATING DEVICES TO INCLUDE TRANSMITTER, RECEIVER AND REMOTE INDICATOR STATION, WALL OR PENDANT MOUNTED IN FLUSH OR SURFACE JUNCTION BOX AS NOTED ON PLANS. BT=BEAM TRANSMITTER, BR=BEAM RECEIVER.
- HEAT DETECTOR INITIATING DEVICE, CEILING MOUNTED ON FLUSH OR SURFACE JUNCTION BOX.
- HEAT DETECTOR INITIATING DEVICE, STRUCTURE MOUNTED ABOVE SUSPENDED CEILING TO SURFACE JUNCTION BOX.
- F — MANUAL PULL STATION INITIATING DEVICE, WALL MOUNTED AT +48" UON.
- D 2 — MOTOR OPERATED FIRE/SMOKE DAMPER 'FSD', NIEC. SYMBOL DENOTES INTERFACE FOR POWER, CONTROL AND POSSIBLY MONITORING CONNECTIONS FROM FIRE ALARM SYSTEM. ALSO, INCLUDES LOCAL POWER DISCONNECT MEANS. 'ES' BY FSD INDICATES END SWITCH CONNECTIONS FOR MONITORING BOTH 'OPEN' AND 'CLOSED POSITIONS. ADJACENT NUMBER INDICATES QUANTITY OF ACTUATORS AND END SWITCH GROUPS REQUIRING CONNECTION PER FSD, IF MORE THAN 1.
- SPRINKLER SYSTEM WATER FLOW SWITCH, NIEC. SYMBOL DENOTES INTERFACE FOR MONITORING CONNECTION FROM FIRE ALARM SYSTEM.
- SPRINKLER SYSTEM TAMPER SWITCH, NIEC. SYMBOL DENOTES INTERFACE FOR MONITORING CONNECTION FROM FIRE ALARM SYSTEM.
- SPRINKLER SYSTEM POST INDICATING VALVE 'PIV', NIEC. SYMBOL DENOTES INTERFACE FOR MONITORING CONNECTION FROM FIRE ALARM SYSTEM. INCLUDE A REMOTE MOUNTED ADDRESSABLE MONITORING MODULE AT PIV.
- SM — REMOTE MOUNTED SINGLE INPUT, ADDRESSABLE, MONITORING MODULE FOR INITIATING CIRCUIT CONNECTION.
- DM — REMOTE MOUNTED DUAL INPUT, ADDRESSABLE, MONITORING MODULE FOR INITIATING CIRCUIT CONNECTION.
- CR — REMOTE MOUNTED PROGRAMMABLE CONTROL RELAY MODULE FOR ADDRESSABLE CONTROL.
- DPS — DIFFERENTIAL PRESSURE SWITCH, NIEC. SYMBOLS DENOTES INTERFACE FOR MONITORING CONNECTION FROM FIRE ALARM SYSTEM TO ANNUNCIATE FAN OPERATION. INCLUDE A REMOTE MOUNTED ADDRESSABLE MONITORING MODULE AT EACH LOCATION.
- EOL — END-OF-LINE RESISTOR.
- PS — AIR PRESSURE SWITCH FOR PRE ACTION SPRINKLER SYSTEMS, NIEC. SYMBOL DENOTES INTERFACE FOR MONITORING CONNECTION FROM FIRE ALARM SYSTEM. INCLUDE A REMOTE MOUNTED ADDRESSABLE MONITORING MODULE AT EACH LOCATION.
- MAGNETIC TYPE DOOR HOLD OPEN/RELEASE DEVICE, WALL MOUNTED, NIEC. SYMBOL DENOTES INTERFACE FOR POWER AND CONTROL CONNECTIONS FROM FIRE ALARM SYSTEM.
- AUDIBLE NOTIFICATION APPLIANCE, WALL MOUNTED, 6" BELOW CEILING OR +80" AFF, WHICHEVER IS LOWER.
- VISIBLE NOTIFICATION APPLIANCE, WALL MOUNTED, 6" BELOW CEILING OR +80" AFF, WHICHEVER IS LOWER. NUMBER ASSOCIATED WITH 'cd' REPRESENTS CANDELA RATING OF STROBE.
- AUDIBLE/VISIBLE NOTIFICATION APPLIANCE, WALL MOUNTED, 6" BELOW CEILING OR +80" AFF, WHICHEVER IS LOWER. NUMBER ASSOCIATED WITH 'cd' REPRESENTS CANDELA RATING OF STROBE.
- AUDIBLE NOTIFICATION APPLIANCE, CEILING MOUNTED IN FLUSH BACK BOX.
- VISIBLE NOTIFICATION APPLIANCE, CEILING MOUNTED IN FLUSH BACK BOX. NUMBER ASSOCIATED WITH 'cd' REPRESENTS CANDELA RATING OF STROBE.
- AUDIBLE/VISIBLE NOTIFICATION APPLIANCE, CEILING MOUNTED IN FLUSH BACK BOX. NUMBER ASSOCIATED WITH 'cd' REPRESENTS CANDELA RATING OF STROBE.
- FIREMAN'S TELEPHONE JACK, WALL MOUNTED, +42" UON.

ABBREVIATIONS

A	AMPERES	LSCP	LIFE SAFETY CONTROL PANEL
AFC	ABOVE FINISHED CEILING	LCP	LIGHTING CONTROL PANEL
AFI	ARC FAULT CIRCUIT INTERRUPTER	MBGB	MAIN BUILDING GROUND BUS
AF	AMPERE OVERCURRENT FRAME SIZE (WHEN APPLIED TO CIRCUIT BREAKERS) OR AMPERE FUSE SIZE (WHEN APPLIED TO FUSES)	MCB	MAIN CIRCUIT BREAKER
AFF	ABOVE FINISHED FLOOR	MCC	MOTOR CONTROL CENTER
AIC	ASYMMETRIC INTERRUPTING CURRENT	MLO	MAIN LUGS ONLY
AL	ALUMINUM	MT	EMPTY
AT	AMPERE OVERCURRENT TRIP (WHEN APPLIED TO CIRCUIT BREAKERS)	MTC	EMPTY CONDUIT
ATS	AUTOMATIC TRANSFER SWITCH	MTGB	MAIN TELECOM GROUND BUS
BAS	BUILDING AUTOMATION SYSTEM	MTS	MANUAL TRANSFER SWITCH
BFC	BELOW FINISHED CEILING	MW	MICROWAVE
BOC	BACK OF CURB	(N)	NEW
BPS	BOLTED PRESSURE CONTACT SWITCH	NC	NORMALLY CLOSED
C	CONDUIT	NF	NON-FUSED
CCTV	CLOSED CIRCUIT TELEVISION	NIEC	NOT IN ELECTRICAL CONTRACT
CL	CURRENT LIMITING CIRCUIT BREAKER OR FUSE	NO	NORMALLY OPEN
CP	CIRCULATION PUMP	NTS	NOT TO SCALE
CKT	CIRCUIT	OC	ON CENTER
CT	CURRENT TRANSFORMER	OFCI	OWNER FURNISHED CONTRACTOR INSTALLED
CU	COPPER	PDU	POWER DISTRIBUTION UNIT
DF	DRINKING FOUNTAIN	PIV	POST INDICATING VALVE
DW	DISH WASHER	PNL	PANEL
(E)	EXISTING TO REMAIN	PT	POTENTIAL TRANSFORMER
EC	ELECTRICAL CONTRACTOR	PVC	POLYVINYL CHLORIDE
EF	EXHAUST FAN	RF	REFRIGERATOR
EP	EXPLOSION PROOF	(R)	EXISTING TO BE REMOVED
EPO	EMERGENCY POWER OFF	(RL)	RELOCATED
EMCS	ENERGY MANAGEMENT CONTROL SYSTEM	(RR)	REMOVE AND RELOCATE
EMT	ELECTRICAL METALLIC TUBING	RSC	RIGID STEEL CONDUIT
ETD	EMERGENCY TRANSFER DEVICE	SAD	SEE ARCHITECTURAL DRAWINGS
EVSE	ELECTRIC VEHICLE SUPPLY EQUIPMENT	SPD	SURGE PROTECTION DEVICE
EVCS	ELECTRIC VEHICLE CHARGING STATION	TC	TIME CLOCK
EWH	ELECTRIC WATER HEATER	TGB	TELECOMMUNICATIONS GROUND BUS
F	FUSED	TP	TWISTED-PAIR
(F)	FUTURE	TX	TRANSFORMER
FACP	FIRE ALARM CONTROL PANEL	TYP	TYPICAL
FAJB	FIRE ALARM JUNCTION BOX	UON	UNLESS OTHERWISE NOTED
FFCP	FIREMAN'S FAN CONTROL PANEL	UPS	UNINTERRUPTIBLE POWER SUPPLY
FLA	FULL LOAD AMPERES	URAP	UPS REMOTE ANNUNCIATOR PANEL
FMC	FLEXIBLE METAL CONDUIT	UR	UNDERCOUNTER REFRIGERATOR
FSD	FIRE/SMOKE DAMPER	V	VOLTS
FSEC	FOOD SERVICE EQUIPMENT CONTRACTOR	VA	VOLTS-AMPS
FRAP	FIREMAN'S REMOTE ANNUNCIATOR PANEL	VAV	VARIABLE AIR VOLUME
G	GROUND	VFD	VARIABLE FREQUENCY DRIVE
GB	GROUND BUS	VM	VENDING MACHINE
GD	GARBAGE DISPOSAL	W	WATTS
GFCI	GROUND FAULT CIRCUIT INTERRUPTER	WAP	WIRELESS ACCESS POINT
GND	GROUND	WH	WATER HEATER
GRAP	GENERATOR REMOTE ANNUNCIATOR PANEL	WP	WEATHERPROOF
GWH	GAS WATER HEATER	2SP	TWO SPEED
HPC	HIGH PRESSURE CONTACT SWITCH	1Ø	1 PHASE
HVAC	HEATING,VENTING AND AIR CONDITIONING	3Ø	3 PHASE
IMC	INTERMEDIATE METAL CONDUIT	1P	1 POLE
IWH	INSTANTANEOUS OR POINT OF USE WATER HEATER	2P	2 POLE
JB	JUNCTION BOX	3P	3 POLE
		3W	3 WIRE
		4W	4 WIRE

DRAWING INDEX

E0.01	SYMBOLS LIST AND DRAWING INDEX
E0.02	SCHEDULES & ONE-LINE DIAGRAM
E0.03	TITLE 24 SHEETS
E1.01	POWER & CONDUIT SITE PLAN
E1.02	POWER & LIGHTING PLAN
E2.01	BLDG 1, 2, & 3 FIRE ALARM PLAN
E2.02	FIRE ALARM SCHEDULES, NOTES & DETAILS
E3.01	DETAILS

LPAS

2484 Natomas Park Drive Suite 100 Sacramento CA 95833
916 443 0335 lpasdesign.com Architecture + Design

ORGANIC FARM CLASSROOMS INCREMENT 1

INDIAN VALLEY CAMPUS
COLLEGE OF MARIN

NOVATO, CA

FILE NUMBER: 21-C1
IDENTIFICATION STAMP
DIVISION OF THE STATE ARCHITECT
01 - 116913 INCR: 1
AC RE FLS ED SSR CD
DATE 01/12/2018

ARCHITECT'S STAMP APPROVAL

THIS DOCUMENT CONTAINS INFORMATION THAT IS PROPRIETARY TO LPAS, INC. AND IS FURNISHED FOR THE PURPOSES OF REVIEW, BIDDING OR CONSTRUCTION OF THE PROJECT LISTED IN THE JOB TITLE BOX ABOVE AND SHALL NOT BE USED FOR ANY OTHER PURPOSE OR RELEASED TO ANY OTHER PARTY WITHOUT THE WRITTEN CONSENT OF LPAS, INC. INFORMATION CONTAINED HEREIN IS AN INSTRUMENT OF PROFESSIONAL SERVICES AND SHALL REMAIN THE PROPERTY OF LPAS, INC. ALL RIGHTS RESERVED COPYRIGHT © 2009.

THIS DRAWING IS NOT FINAL OR TO BE USED FOR CONSTRUCTION UNTIL IT IS SIGNED BY THE ARCHITECT AND ENGINEER.

CONSULTANT

The Engineering Enterprise
Consulting Engineers
1125 HIGH STREET
AUBURN, CA 95603
(530) 886-8556

REGISTERED PROFESSIONAL ENGINEER
SCOTT WHEELER
No. E015491
Exp. 06/30/19
ELECTRICAL
STATE OF CALIFORNIA

SYMBOLS LIST & DRAWING INDEX

PROJECT NO: 1102-0005
DATE: 11-17-2017

SHEET NO:

E0.01

CONSTRUCTION SET

PROJECT: ORGANIC FARM PARKING LOT EXISTING

LOCATION: SHOP BUILDING

PANEL - WC

LOAD SERVED	Load(KVA) Ltg	Rec	Oth Tot	C. B. Amp	Pole	Ckt	A	B	C	Ckt	C. B. Amp	Pole	Load(KVA) Ltg	Rec	Oth Tot	LOAD SERVED
LTG				20	1	1	*			2	20	1				REC
LTG				20	1	3		*		4	20	1				REC
EXTERIOR LTG				20	1	5			*	6	20	1				REC
REC				30	2	7	*			8	20	1				REC
—					—			*		10	20	1				REC
REC				30	2	11			*	12	20	1				REC
—					—		*			14	20	1				REC
PANEL G				100	2	15		*		16	30	2				REC
—					—				*			—				—
(F)MONUMENT SIGN	0.6			20	1	19	*					—				—
(E)IRRIGATION CONTROLLER	1.0			20	1	21		*		22	30	3				LIFT
{1} (N) EXTERIOR REC		0.9		20	1	23			*			—				—
{1} (N) EXTERIOR REC		0.9		20	1	25	*					—				—
{1} (N) EXTERIOR REC		0.7		20	1	27		*		28	50	3				VEHICLE DYNO
{1} (N) EXTERIOR REC		0.7		20	1	29			*			—				—
{1} (N) FARM STAND LIGHTING	0.1					31	*					—				—
{1} (N) SITE LIGHTING	0.6					33		*		34	45	3				ROTARY LIFT
Space						35			*			—				—
Space						37	*					—				—
Space						39		*		40	100	3				PAINT BOOTH PANEL
Space						41			*			—				—
TOTALS --------->	2.3	3.2														<------- TOTALS

VOLTAGE: 120/208V, 3Ø, 4W
S.C.A.: 22K AIC RMS SYM
MOUNTING: SURFACE
BUS SIZE: 400 AMP BUSING
MAINS: 250 AMP MAIN BRKR

Connected Load (KVA)	Demand Factor	Demand Load	Load Description
2.3	125% OF LOAD	2.9	<---- Lighting
3.2	CEC 220-14(I)	3.2	<---- Receptacles
	CEC 220-56		<---- Kitchen
	CEC 620-14		<---- Elevator
	CEC 517.73(A)		<---- X-Ray
	1.0 + 25% Largest		<---- Mech
	CHARGING STATION		<---- Electrical Vehicle
	125%		<---- Other

5.6 KVA 6.1 KVA 17.1 Amps

+25% Spare 21.3 Amps

PHASE BALANCE (SECT 1)

	A	B	C
KVA	2	2	2
%	29%	42%	29%
AMP	14	19	14

Feed: CONTRACTOR'S OPTION

ADDITIONAL FEATURES:
ALL CIRCUITS ARE EXISTING UON.

BREAKER NOTES
{1} NEW BREAKER

BREAKERS THAT SHARE NEUTRAL CONDUCTORS SHALL BE PROVIDED WITH HANDLE TIES.
DATE PRINTED: 08/21/17

LIGHTING FIXTURE SCHEDULE - COM ORGANIC FARM CLASSROOMS

TYPE	MANUFACTURER & CATALOG NUMBER	WATTAGE	VOLTAGE	BALLAST /DRIVER	DESCRIPTION	FIXTURE WEIGHT	DETAIL
SF1	PHILIPS GARDCO BRM830-42-MR-WW-UNIV-BLP	41W	120/277	ELEC. DRIVER	42" HIGH BOLLARD LIGHTS WITH MOTION SENSORS. LIGHTS ARE ON AT 10% FULL POWER, THEN 100% POWER WHEN A PERSON IS NEARBY.		
SF2	VISA LIGHTING OW2300-L35K-MVOLT-MED-MED-JB9005	15W	120/277	ELEC. DRIVER	UP DOWN LIGHT MOUNTED ON WIDE FLANGE COLUMN AT 7'-0" ABOVE GROUND. THE FIXTURE IS 15"H x 5.25"D x 3.875"W.		
SF3	WAC LIGHTING FIN WP-LED127-30-GH	27W	120/277	ELEC. DRIVER	WALL PACK		
SF4	BARN LIGHT ELECTRIC G-ASFC8-PC-975-G-34-GU-24	23W	120	ELEC. DRIVER	FLUORESCENT 8" x7.25" GOOSENECK SIGN LIGHT	5 LBS.	

NEW
Exterior Lighting Control Panel LCP

Relay	Served from Panel	Voltage	Circuit / Switchleg	Area Served	Time Clock Based Control
1	WC	120V	33a	BOLLARDS & UP-DOWN LIGHTS	ON/OFF 1

NOTES:
1 - LIGHTS TO TURN OFF AT DAWN AND ON AT DUSK. VERIFY EXTERIOR LIGHTING SCHEDULE WITH THE OWNER.

NUMBERED SHEET NOTES

1. CONNECT FEEDER TAP TO ELECTRICAL PANEL MOUNTED ON WALL INSIDE BACK OF MODULAR CLASSROOM. PANEL TO BE PROVIDED BY MODULAR BUILDING MANUFACTURER.
2. CONNECT FEEDER TAP TO ELECTRICAL PANEL MOUNTED ON WALL OUTSIDE BACK OF MODULAR RESTROOMS. PANEL TO BE PROVIDED BY MODULAR BUILDING MANUFACTURER.
3. AT EXISTING MAIN SWITCHBOARD PROVIDE NEW CIRCUIT BREAKER IN EXISTING PREPARED SPACE, OR REPLACE EXISTING SPARE BREAKER AND RETURN TO OWNER. NEW BREAKER TO MATCH MANUFACTURER, TYPE, AIC RATING OF EXISTING BREAKERS. PROVIDE ALL REQUIRED MOUNTING HARDWARE AND FILLER PLATES. PROVIDE ENGRAVED NAMEPLATE. BENCH TEST CIRCUIT BREAKER AND SUBMIT TEST REPORT PRIOR TO INSTALLATION.
4. INSTALL TRANSFORMER WITH N3R WEATHER SHIELD ON CONCRETE HOUSEKEEPING PAD PER DETAIL I/E4.01.

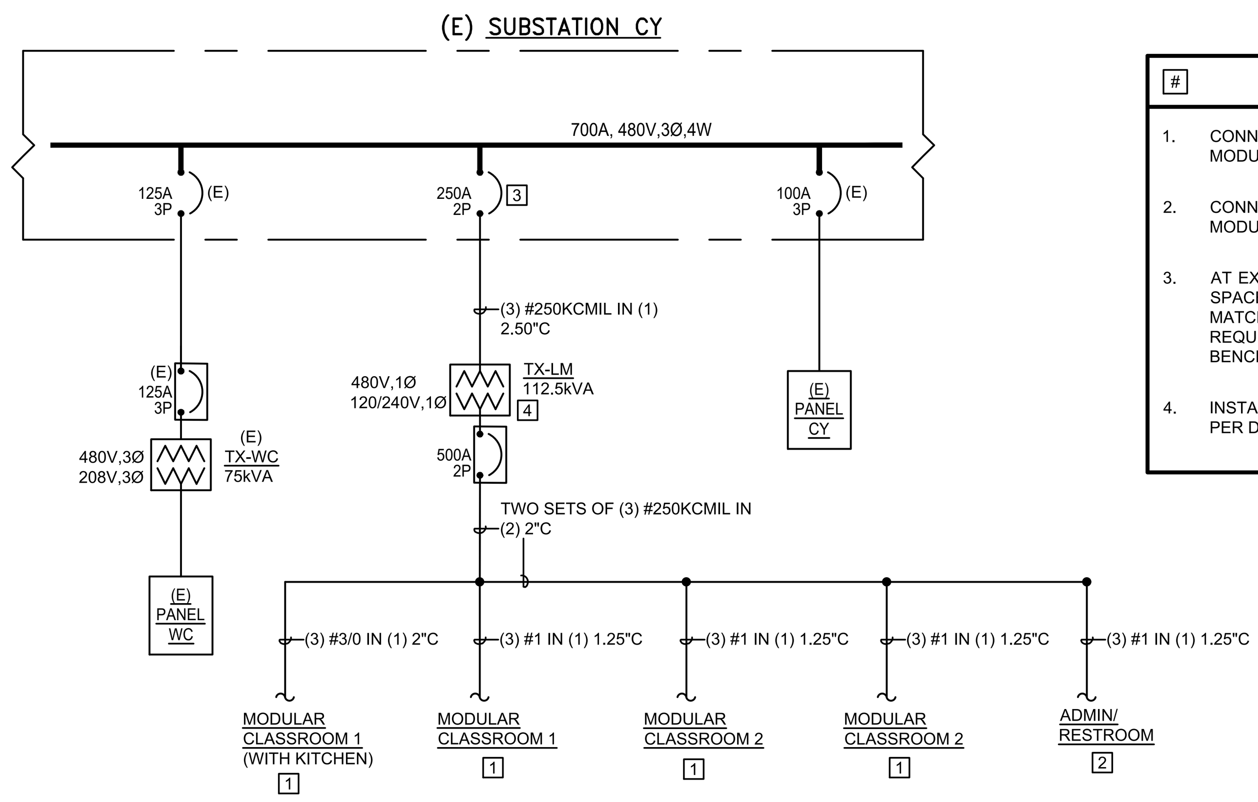

A
E0.02
PARTIAL POWER ONE LINE DIAGRAM
NTS

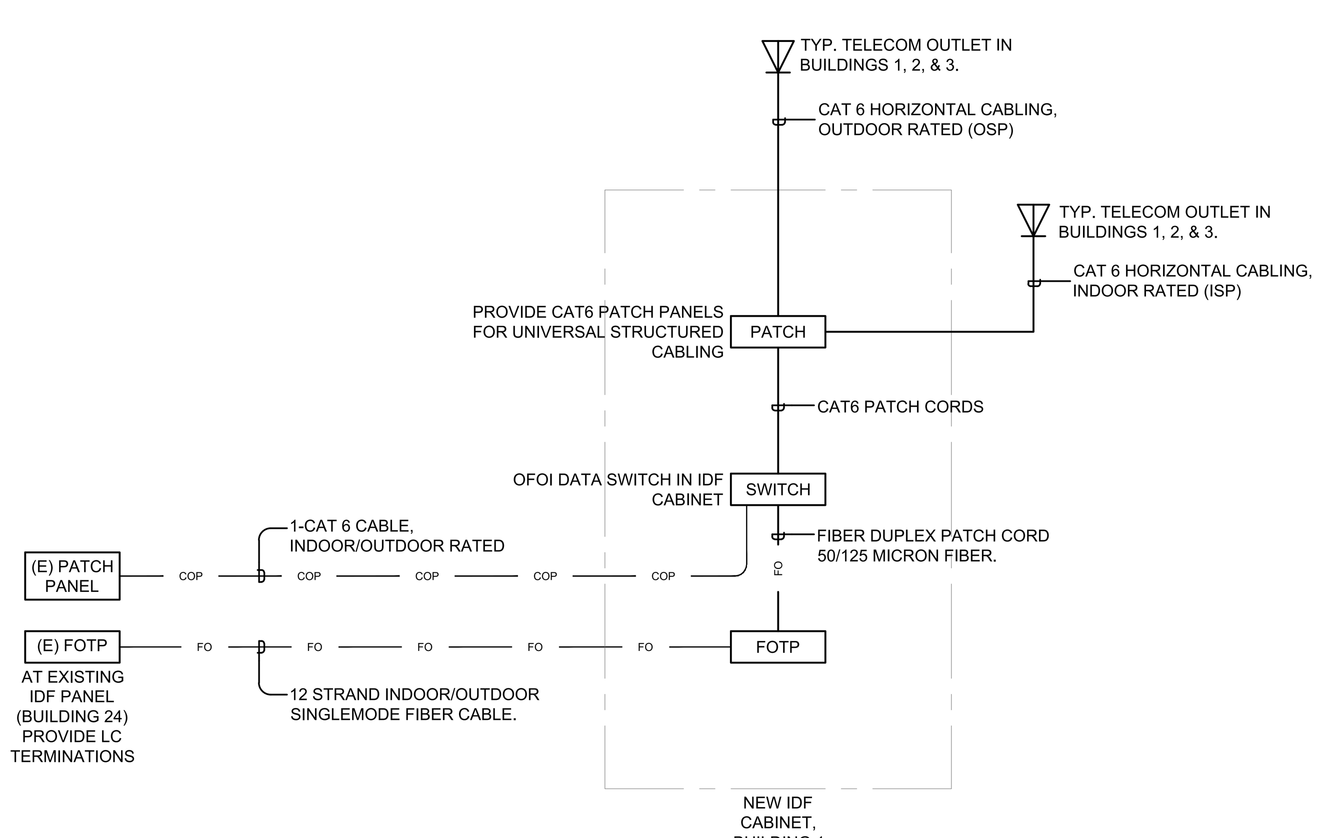

B
E0.02
TELECOMMUNICATIONS RISER DIAGRAM
NTS

PROJECT GENERAL NOTES

*EXISTING CONDITIONS
1. THE EXISTING CONDITIONS INDICATED IN THIS DRAWING SET WERE DEVELOPED FROM VARIOUS SOURCES WHICH WERE NOT ALL FIELD VERIFIED AND NOT ALL CONDITIONS ARE SHOWN. LOCATIONS, ROUTING, ELEVATIONS, SIZES, ETC. ARE SHOWN SCHEMATICALLY. CONTRACTOR SHALL VERIFY EXISTING CONDITIONS PRIOR TO CONSTRUCTION.
2. DRAWINGS INDICATE GENERAL ARRANGEMENT OF SYSTEMS AND WORK. FOLLOW DRAWINGS IN LAYING OUT WORK AND CHECK DRAWINGS OF OTHER TRADES TO VERIFY SPACE CONDITIONS. FINAL LOCATIONS SHALL BE ADJUSTED TO MEET FIELD CONDITIONS.
3. THE CONTRACTOR SHALL VISIT THE JOBSITE AND VERIFY ALL EXISTING CONDITIONS BEFORE CONSTRUCTION AND SHALL INCLUDE IN THE BID THE NECESSARY COSTS TO CONSTRUCT THIS PROJECT IN ACCORDANCE WITH THE ELECTRICAL DRAWINGS, SPECIFICATIONS AND ALL APPLICABLE CODES.

*DEMO & GENERAL CONDITIONS
4. CONTRACTOR SHALL REMOVE ALL LEFT OVER CONDUIT, WIRE, SCRAPS, ETC. AND LEAVE PREMISES CLEAN AND FREE OF TRASH OR DEBRIS RESULTING FROM THEIR WORK.
5. CONTRACTOR SHALL DISCONNECT AND REMOVE ALL DEMOLISHED DEVICES AND FIXTURES AS SHOWN ON DEMOLITION PLAN. TURN OVER TO OWNER EXISTING DEVICES AND FIXTURES THAT ARE NOT REUSED. PROPERLY DISCARD IF THE OWNER DOES NOT WANT.
6. RECONNECT EXISTING DEVICES WHOSE CIRCUITS HAVE BEEN INTERRUPTED BY DEMOLITION BY PROVIDING NEW CONNECTIONS TO ANOTHER EXISTING DEVICE OR PANEL. VERIFY CIRCUIT LOADING ON EXISTING CIRCUIT.
7. WHEN A DEVICE IS REMOVED FROM AN EXISTING WALL WHICH WILL REMAIN, PATCH WALL TO MATCH EXISTING OR NEW FINISH.
8. MOUNTING HEIGHTS SHOWN ARE FROM FINISHED FLOOR TO THE CENTERLINE OF DEVICES, COORDINATE WITH ARCHITECTURAL DRAWINGS.
9. CLEAN EXISTING LIGHTING FIXTURES WITHIN THE PROJECT AREA AS PART OF THIS PROJECT. INCLUDE NEW LAMPS WHERE COLOR INCONSISTENCIES EXIST, OR WHERE LAMPS ARE BURNED OUT/NOT INSTALLED.

*SITE & SITE LIGHTING
10. THERE SHALL BE A MINIMUM OF 24" OF COVER OVER UNDERGROUND CONDUITS, UON. INCLUDE A MINIMUM 12" SEPARATION BETWEEN ALL LOW VOLTAGE AND LINE VOLTAGE RACEWAYS. INSTALL A WARNING/MARKER TAPE 12 INCHES OVER THE CONDUIT.
11. CONTRACTOR SHALL SIZE ALL INDOOR AND EXTERIOR JUNCTION/PULLBOXES PER THE MINIMUM CODE REQUIREMENTS OF CEC ARTICLE 314, WHEN NOT INDICATED ON THE PLANS.

*EQUIPMENT, CONDUIT, WIRE, BOXES & DEVICES
12. PROVIDE INDIVIDUAL GFCI RECEPTACLES AT EACH LOCATION SHOWN, DO NOT USE FEED-THRU GFCI TYPE RECEPTACLES. LOCATE RECEPTACLE AT END OF A BRANCH CIRCUIT WIRE.
13. WHERE RECEPTACLES ARE LOCATED OUTSIDE OR IN WET/DAMP LOCATIONS PROVIDE WEATHER RESISTANT TYPE, UON.
14. CONDUIT SIZE SHALL BE 0.75" MINIMUM, U.O.N.
15. ALL CONDUCTORS ON THIS PROJECT SHALL BE COPPER.
16. FEEDER AND BRANCH CIRCUIT HOMERUNS SHALL BE INSTALLED IN CONDUIT. MC TYPE CABLE SHALL NOT BE USED FOR ANY HOMERUNS ON THIS PROJECT.
17. INSTALL AND CONNECT A CODE SIZED INSULATED OR BARE COPPER GROUNDING CONDUCTOR IN ALL BRANCH CIRCUITS AND FEEDERS.
18. ALL DEVICES SHALL HAVE TYPE ON TAPE LABELS INDICATING THE PANELBOARD AND CIRCUIT SERVING EACH DEVICE, TYPICAL OF ALL DEVICES INCLUDED ON THIS PROJECT.
19. PROVIDE INSULATING BUSHINGS OR INSULATED THROAT ON THE ENDS OF ALL EMPTY CONDUIT SLEEVES AND INSTALL A POLYETHYLENE PULLING ROPE.
20. WHERE CIRCUITS ARE SHOWN ON THE DRAWINGS WITH HOMERUNS THAT SHARE NEUTRAL CONDUCTORS THE CONTRACTOR SHALL PROVIDE HANDLE TIES BETWEEN ALL BRANCH CIRCUIT BREAKER LOADS WHICH SHARE A NEUTRAL.
21. PROVIDE DEDICATED CONDUIT/PATHWAYS FOR ALL 0-10v LIGHTING CONTROL SIGNALS SEPARATE FROM ALL LINE VOLTAGE RACEWAY.
22. ALL OUTDOOR ELECTRICAL EQUIPMENT SHALL BE WEATHER-PROTECTED AND LISTED FOR EXTERIOR USE.
23. PROVIDE TYPE WRITTEN PANEL SCHEDULES UPDATED TO INCLUDE ALL FIELD MODIFICATIONS AND SCOPE ITEMS ASSOCIATED WITH THIS PROJECT.
24. PROVIDE ENGRAVED NAMEPLATES FOR NEW ELECTRICAL BOARDS, DISCONNECTS, AND SWITCHGEAR OR WHERE INDICATED.

*FIRE ALARM & FIRE RATED ITEMS
25. ALL CONDUIT, OUTLET BOXES, AND RACEWAY PENETRATIONS THROUGH FIRE RATED WALLS OR FLOOR ASSEMBLIES SHALL BE A UL LISTED ASSEMBLY THAT PROTECTS THE RATED ASSEMBLY. INCLUDE FIRE RATED DEVICE BOX ASSEMBLIES WHEN REQUIRED. SEE ARCHITECTURAL DRAWINGS FOR LOCATIONS OF ALL RATED WALLS AND FLOORS AS APPLICABLE.

*CODE REQUIREMENTS & ELEC. CLEARANCES
26. ALL ELECTRICAL WORK SHALL COMPLY WITH THE LATEST EDITION OF THE CALIFORNIA ELECTRICAL CODE (CEC).
27. REQUIRED ELECTRICAL EQUIPMENT WORKING SPACE DEPTH SHALL NOT BE LESS THAN THAT INDICATED IN CEC TABLE 110.26. THE WIDTH OF THE WORKING SPACE IN FRONT OF THE ELECTRICAL EQUIPMENT SHALL BE THE WIDTH OF THE EQUIPMENT OR 30", WHICHEVER IS GREATER. THIS REQUIREMENT ALSO APPLIES TO DISCONNECT SWITCHES.
28. ALL ELECTRICAL MATERIALS AND EQUIPMENT SHALL BE LISTED BY UNDERWRITERS LABORATORIES AND BEAR THEIR LABEL, OR ETL.
29. CONTRACTOR SHALL PROVIDE ARC FLASH LABELS FOR ALL ELECTRICAL EQUIPMENT WITHIN THE SCOPE OF THIS PROJECT. THESE LABELS SHALL BE GENERATED BY THE CONTRACTOR FROM THE POWER SYSTEM STUDY AND SUBMITTED WITH THE POWER SYSTEM STUDY SUBMITTAL FOR ENGINEER REVIEW AND APPROVAL. THIS INCLUDES ALL FIELD MARKING OF KAIC VALUES ON EXISTING OR NEW BOARDS PER THE CEC.
30. WIRING SPACE IN PANELBOARDS, DISTRIBUTION PANES AND SWITCHBOARDS SHALL BE DEDICATED TO CONDUCTORS TERMINATED IN THAT ENCLOSURE. PANELBOARDS, DISTRIBUTION PANELS AND SWITCHBOARDS SHALL NOT BE USED AS PULL AND/OR SPLICE BOXES FOR CONDUCTORS THAT TERMINATE IN OTHER ENCLOSURES. DO NOT SPLICE CONDUCTORS IN EQUIPMENT.
31. NEW CIRCUIT BREAKERS INSTALLED IN EXISTING EQUIPMENT SHALL BE PROVIDED TO MATCH THE kAIC RATINGS AND THE MANUFACTURER OF THE EXISTING.
32. PROVIDE CLEAR SIGNAGE ON ALL ELECTRICAL EQUIPMENT PER CEC TO INDICATE THE ARC FLASH HAZARD WARNING, AND THE MAXIMUM AVAILABLE FAULT CURRENT. WHEN MODIFICATIONS OCCUR THAT AFFECT THE MAXIMUM FAULT CURRENT THE CONTRACTOR SHALL RECALCULATE AS NECESSARY AND REMARK THE EQUIPMENT.

*COORDINATION
33. REFER TO MECHANICAL & PLUMBING DRAWINGS FOR EXACT LOCATIONS OF EQUIPMENT. PROVIDE ALL LINE VOLTAGE AND LOW VOLTAGE WIRING, CONTROL WIRING, INTERLOCK CABLING, AND CONDUIT REQUIRED.
34. PROVIDE A DISCONNECTING MEANS AT ALL MOTORS, WHETHER INDICATED ON THE PLANS OR NOT.
35. PROVIDE FUSES IN DISCONNECTS FOR MECHANICAL EQUIPMENT AS COORDINATED WITH THE UNITS NAMEPLATE AND MANUFACTURERS INSTALLATION INSTRUCTIONS. FUSES SHALL BE CURRENT LIMITING TYPE.
36. PROVIDE A GFCI TYPE DEVICE WITH WEATHER PROOF WHILE IN USE COVER WITHIN 25' OF ALL EXTERIOR HVAC/PLUMBING EQUIPMENT.
37. WORK PERFORMED FROM THESE DRAWINGS SHALL ALSO COMPLY WITH THE PROJECT SPECIFICATIONS. IN THE EVENT THAT THERE IS A CONFLICT BETWEEN THE DRAWINGS AND SPECIFICATIONS, THE MORE STRINGENT REQUIREMENT SHALL TAKE PRECEDENT.
38. CONTRACTOR SHALL CONFIRM THAT ALL LIGHTING FIXTURES SPECIFIED, AND THE CEILING TYPES, FIXTURE TRIMS, AND FRAMES ARE ALL COMPATIBLE PRIOR TO THE CONTRACTOR LIGHTING FIXTURE SUBMITTAL.
39. BUILDING EXPANSION JOINTS ARE NOT INDICATED ON THE ELECTRICAL DRAWINGS (UON) AND SHALL BE COORDINATED WITH THE ARCHITECTURAL DRAWINGS. INCLUDE FLEXIBLE EXPANSION WIRING METHODS AT EXPANSION JOINTS TO MEET THE DEFLECTION AND EXPANSION REQUIREMENTS OF THE BUILDING.

*MISC.
40. CONTRACTOR SHALL PREPARE RED LINED AS-BUILT DOCUMENTS REPRESENTING THE ACTUAL FIELD ROUTINGS AND INSTALLATION LOCATIONS FOR ALL ITEMS ON THIS PROJECT.
41. SURFACE MOUNTED CONDUIT WHERE APPROVED, AND INSTALLED, SHALL BE PAINTED TO MATCH THE ARCHITECTURAL FINISHES IN THAT AREA.
42. CONDUIT ROUTING (WHERE SHOWN) IS ESSENTIALLY DIAGRAMMATIC. CONTRACTOR SHALL LAYOUT RUNS TO SUIT FILED CONDITIONS AND THE COORDINATION REQUIREMENTS OF OTHER TRADES.
43. DRAWINGS INDICATE JUNCTION BOXES WITH HOMERUNS ON THE PLANS, BUT THE CONTRACTOR SHALL PROVIDE ALL INTERMEDIATE RACEWAY WORK AND CONDUCTORS/CABLING BETWEEN THE DEVICES, FIXTURES, AND JUNCTION BOXES AS COORDINATED WITH ALL FIELD CONDITIONS AND TRADES.

LPAS
2484 Natomas Park Drive Suite 100 Sacramento CA 95833
916 443 0335 lpasdesign.com Architecture + Design

ORGANIC FARM CLASSROOMS INCREMENT 2

INDIAN VALLEY CAMPUS
COLLEGE OF MARIN

NOVATO, CA

FILE NUMBER: 21-C1
IDENTIFICATION STAMP
DIVISION OF THE STATE ARCHITECT
01 - 116913 INCR: 1
AC RE FLS ED SSR CD
DATE 01/12/2018

ARCHITECT'S STAMP APPROVAL

THIS DOCUMENT CONTAINS INFORMATION THAT IS PROPRIETARY TO LPAS, INC. AND IS FURNISHED FOR THE PURPOSES OF REVIEW, BIDDING OR CONSTRUCTION OF THE PROJECT LISTED IN THE JOB TITLE BOX ABOVE AND SHALL NOT BE USED FOR ANY OTHER PURPOSE OR RELEASED TO ANY OTHER PARTY WITHOUT THE WRITTEN CONSENT OF LPAS, INC. INFORMATION CONTAINED HEREIN IS AN INSTRUMENT OF PROFESSIONAL SERVICES AND SHALL REMAIN THE PROPERTY OF LPAS, INC. ALL RIGHTS RESERVED COPYRIGHT © 2009.

THIS DRAWING IS NOT FINAL OR TO BE USED FOR CONSTRUCTION UNTIL IT IS SIGNED BY THE ARCHITECT AND ENGINEER.

CONSULTANT
The Engineering Enterprise
Consulting Engineers
1125 HIGH STREET
AUBURN, CA 95603
(530) 886-8556

REGISTERED PROFESSIONAL ENGINEER
SCOTT WHEELER
No. E015491
Exp. 06/30/19
ELECTRICAL
STATE OF CALIFORNIA

SCHEDULES & RISER DIAGRAMS

PROJECT NO: 1102-0005
DATE: 12-13-2017

SHEET NO:
E0.02

FOR CONSTRUCTION

STATE OF CALIFORNIA
OUTDOOR LIGHTING
CEC-NRCC-LTO-01-E (Revised 04/16) CALIFORNIA ENERGY COMMISSION
CERTIFICATE OF COMPLIANCE NRCC-LTO-01-E
Outdoor Lighting (Page 1 of 4)
Project Name: COM Organic Farm Classrooms | Date Prepared: August 14, 2017

A. General Information

Project Address: Novato, CA	Total Illuminated Hardscape Area
Phase of Construction: ☑ New Construction ☐ Addition ☐ Alteration	
Outdoor Lighting Zone (LZ) ☐ LZ-1 ☐ LZ-2 ☐ LZ-3 ☐ LZ-4	

I have confirmed with the AHJ which OLZ applies to this site. For default lighting zone designations, see Title 24 Part 6, §10-114

B. LIGHTING COMPLIANCE DOCUMENTS (check box for each document included)

For detailed instructions on the use of this and all Enegery Efficiency Standards compliance documents, refe to the Nonresidential Manual pulished by the California Energy Commission.

NRCC-LTO-01-E	Certificate of Compliance
NRCC-LTO-02-E	Outdoor Lighting Controls Certificate of Compliance
NRCC-LTO-03-E	Outdoor Lighting Power Allowance Certificate of Compliance
NRCC-LTO-04-E	Outdoor Lighting Existing Conditions Certificate of Compliance

C. Summary of Allowed Lighting Power			Watts
01	**Sum Total of ALLOWED** Outdoor Lighting Wattage from NRCC-LTO-03-E, page 1	=	1101.86
	Complies ONLY if **Installed** (Box 02) **<= Allowed** (Box 1)		↕
02	**Sum Total INSTALLED** Outdoor Lighting Wattage from NRCC-LTO-01-E, page 3		739

D. Declaration of Required Installation Certificates - Declare by checking all Installation Certificates that will be submitted. (Retain copies and verify forms are completed and signed.)

☑ NRCI-LTO-01-E - Must be submitted for all buildings	☑ Field Inspector
☑ NRCI-LTO-02-E - Must be submitted for lighting control system, or for an Emergy Management Control System (EMCS), to be recognized for compliance	☑ Field Inspector

E. Declaration of Required Certificates of Acceptance - Declare by checking all Certificates of Acceptance that will be submitted. (Retain copies and verify forms are completed and signed.)

☑ NRCA-LTO-02-A - Must be submitted for outdoor lighting controls.	☑ Field Inspector

F. Schedule of luminaires exempt from the outdoor power lighting power requirements in §140.7

01	02
Name or Symbol	Description of exempt luminaire in accordance with the exemptions

CA Building Energy Efficiency Standards - 2016 Nonresidential Compliance April 2016

STATE OF CALIFORNIA
OUTDOOR LIGHTING
CEC-NRCC-LTO-01-E (Revised 04/16) CALIFORNIA ENERGY COMMISSION
CERTIFICATE OF COMPLIANCE NRCC-LTO-01-E
Outdoor Lighting (Page 2 of 4)
Project Name: COM Organic Farm Classrooms | Date Prepared: August 14, 2017

G. Schedule of luminaires exempt from the cuttoff requirements in §130.2(b)

01	02
Name or Symbol	Description of exempt luminaire in accordance with the exemptions

H. Schedule of luminaires exempt from the outdoor lighting control requirements in §130.2(c)

01	02
Name or Symbol	Description of exempt luminaire in accordance with the exemptions

CA Building Energy Efficiency Standards - 2016 Nonresidential Compliance April 2016

OUTDOOR LIGHTING
CEC-NRCC-LTO-01-E (Revised 04/16) CALIFORNIA ENERGY COMMISSION
CERTIFICATE OF COMPLIANCE NRCC-LTO-01-E
Outdoor Lighting (Page 3 of 4)
Project Name: COM Organic Farm Classrooms | Date Prepared: August 14, 2017

I. OUTDOOR LIGHTING SCHEDULE and FIELD INSPECTION ENERGY CHECKLIST

Luminaire Schedule		Installed Watts					Location	Cutoff	Field Inspector	
01	02	03	04		05	06	07	08	09	
Name or Item Tag	Complete Luminaire Description	Watts per luminaire	How wattage was determined: CEC Default from NA8	According to §130.0(c)	Number of Luminaires	Total Installed Watts in this area (03 x 05)	Primary Function area in which these luminaires are installed (Outdoor Lighting Zone)	BUG Rating	Pass	Fail
SF1	MOTION SENSOR LIGHTS	41			2	82		UH: UL: FVH: BVH: FH: BH:		
SF2	UP DOWN LIGHTS	15			33	495		UH: UL: FVH: BVH: FH: BH:		
SF3	WALL PACK	27			6	162		UH: UL: FVH: BVH: FH: BH:		
					INSTALLED WATTS PAGE TOTAL:	739	Enter sum total of all pages (**Sum Total INSTALLED** Outdoor lighting wattage) into NRCC-LTO-01-E; page 2			

CA Building Energy Efficiency Standards - 2016 Nonresidential Compliance April 2016

STATE OF CALIFORNIA
OUTDOOR LIGHTING
CEC-NRCC-LTO-01-E (Revised 04/16) CALIFORNIA ENERGY COMMISSION
CERTIFICATE OF COMPLIANCE NRCC-LTO-01-E
Outdoor Lighting (Page 4 of 4)
Project Name: COM Organic Farm Classrooms | Date Prepared: August 14, 2017

DOCUMENTATION AUTHOR'S DECLARATION STATEMENT

1. I certify that this Certificate of Compliance documentation is accurate and complete.

Documentation Author Name: Mabel Alcantara	Documentation Author Signature:
Company: The Engineering Enterprise	Signature Date: August 14, 2017
Address: 1125 High Street	CEA/HERS Certification (if applicable):
City/State/Zip Auburn, CA 95603	Phone: (530) 886-8556

RESPONSIBLE PERSON'S DECLARATION STATEMENT

I certify the following under penalty of perjury, under the laws of the State of California:
1. The information provided on this Certificate of Compliance is true and correct.
2. I am eligible under Division 3 of the Business and Professions Code to accept responsibility for the building design or system design identified on this Certificate of Compliance (responsible designer).
3. The energy features and performance specifications, materials, components, and manufactured devices for the building design or system design identified on this Certificate of Compliance conform to the requirements of Title 24, Part 1 and Part 6 of the California Code of Regulations.
4. The building design features or system design features identified on this Certificate of Compliance are consistent with the information provided on other applicable compliance documents, worksheets, calculations, plans and specifications submitted to the enforcement agency for approval with this building permit application.
5. I will ensure that a completed signed copy of this Certificate of Compliance shall be made available with the building permit(s) issued for the building, and made available to the enforcement agency for all applicable inspections. I understand that a completed signed copy of this Certificate of Compliance is required to be included with the documentation the builder provides to the building owner at occupancy.

Responsible Designer Name: Scott Wheeler	Responsible Designer Signature:
Company: The Engineering Enterprise	Signature Date: August 14, 2017
Address: 1125 High Street	License: E015491
City/State/Zip Auburn, CA 95603	Phone: (530) 886-8556

CA Building Energy Efficiency Standards - 2016 Nonresidential Compliance April 2016

STATE OF CALIFORNIA
OUTDOOR LIGHTING CONTROLS
CEC-NRCC-LTO-02-E (Revised 08/16) CALIFORNIA ENERGY COMMISSION
CERTIFICATE OF COMPLIANCE NRCC-LTO-02-E
Outdoor Lighting Controls (Page 1 of 3)
Project Name: COM Organic Farm Classrooms | Date Prepared: August 14, 2017

The NRCC-LT0-02-E shall be used to document all mandatory and prescriptive lighting controls that are applicable to the project.

A. Mandatory Outdoor Lighting Control Declaration Statements

check all that apply:

Lighting shall be controlled by self-contained lighting control devices which are certified to the Energy Commission according to the Title 20 Appliance Efficiency Regulations in accordance with Section 110.9

Lighting shall be controlled by a lighting control system or energy management control system in accordance with §110.9. An Installation Certificate shall be submitted in accordance with Section 130.4(b)

All lighting controls and equipment shall comply with the applicable requirements in §110.9 and shall be installed in accordance with the manufacturer's instructions in accordance with §130.1

Part-Night Outdoor Lighting Controls, as defined in Section 100.1, shall meet the requirements in Section 110.9(b)S

All outdoor incandescent luminaires rated over 100 watts, determined in accordance with Section 130.0(c), shall be controlled by a motion sensor.

All outdoor luminaires rated for use with lamps greater than 150 lamp watts, determined in accordance with Section 130.0(c), shall comply with Backlight, Uplight, and Glare (collectively referred to as "BUG") in accordance with Section 130.2(b)

All installed outdoor lighting shall be controlled by a photocontrol or outdoor astronomical time-switch control in accordance with Section 130.2(c)1

All installed outdoor lighting shall be circuited and independently controlled from other electrical loads by an automatic scheduling control in accordance with Section 130.2(c)2.

All installed outdoor lighting, where the bottom of the luminaire is mounted 24 feet or less above the ground, shall be controlled with automatic lighting controls in accordance with Section 130.2(c)3

For Outdoor Sales Frontage, Outdoor Sales Lots, and Outdoor Sales Canopies lighting, an automatic lighting control in accordance with Section 130.2(c)4.

For Building Facade, Ornamental Hardscape and Outdoor Dining lighting, an automatic lighting control in accordance with Section 130.2(c)S

Before an occupancy permit is granted for a newly constructed building or area, or a new lighting system serving a building, area, or site is operated for normal use, indoor lighting controls serving the building, area, or site shall be certified as meeting the Acceptance Requirements for Code Compliance in accordance with §130.4.(a). Outdoor lighting controls shall comply with the applicable requirements of Section 130.2(c) and Reference Nonresidential Appendix NA7.8

CA Building Energy Efficiency Standards - 2016 Nonresidential Compliance August 2016

STATE OF CALIFORNIA
OUTDOOR LIGHTING CONTROLS
CEC-NRCC-LTO-02-E (Revised 08/16) CALIFORNIA ENERGY COMMISSION
CERTIFICATE OF COMPLIANCE NRCC-LTO-02-E
Outdoor Lighting Controls (Page 2 of 3)
Project Name: COM Organic Farm Classrooms | Date Prepared: August 14, 2017

B.MANDATORY OUTDOOR LIGHTING CONTROL SCHEDULE and FIELD INSPECTION CHECKLIST

Outdoor Lighting Control Schedule			Standards Complying With (✓ all that apply, or leave empty if Exempted)						✓ if acceptance test required	Field Inspector	
01	02	03	04	05	06	07	08	09	10	11	
Location and Application of Luminaires Being Controlled	Type/ Description of Lighting Control (i.e. oitdoor motion sensor, outdoor photocontrol, outdoor astronomical time-switch control, automatic scheduling control, part-night outdoor lighting control)	# of units	§130.2(a)	§130.2(c)1	§130.2(c)2	§130.2(c)3	§130.2(c)4	§130.2(c)5		Pass	Fail
Walkway Bollards	Outdoor motion sensor, astronomical time-switch control	2									
Wall-mount fixtures for walkway	Outdoor Astronomical Time-switch Control	6									
Up-down lights for canopy	Outdoor Astronomical Time-switch Control	33									

CA Building Energy Efficiency Standards - 2016 Nonresidential Compliance August 2016

STATE OF CALIFORNIA
OUTDOOR LIGHTING CONTROLS
CEC-NRCC-LTO-02-E (Revised 08/16) CALIFORNIA ENERGY COMMISSION
CERTIFICATE OF COMPLIANCE NRCC-LTO-02-E
Outdoor Lighting Controls (Page 3 of 3)
Project Name: COM Organic Farm Classrooms | Date Prepared: August 14, 2017

DOCUMENTATION AUTHOR'S DECLARATION STATEMENT

1. I certify that this Certificate of Compliance documentation is accurate and complete.

Documentation Author Name: Mabel Alcantara	Documentation Author Signature:
Company: The Engineering Enterprise	Signature Date: August 14, 2017
Address: 1125 High Street	CEA/HERS Certification (if applicable):
City/State/Zip Auburn, CA 95603	Phone: (530) 886-8556

RESPONSIBLE PERSON'S DECLARATION STATEMENT

I certify the following under penalty of perjury, under the laws of the State of California:
1. The information provided on this Certificate of Compliance is true and correct.
2. I am eligible under Division 3 of the Business and Professions Code to accept responsibility for the building design or system design identified on this Certificate of Compliance (responsible designer).
3. The energy features and performance specifications, materials, components, and manufactured devices for the building design or system design identified on this Certificate of Compliance conform to the requirements of Title 24, Part 1 and Part 6 of the California Code of Regulations.
4. The building design features or system design features identified on this Certificate of Compliance are consistent with the information provided on other applicable compliance documents, worksheets, calculations, plans and specifications submitted to the enforcement agency for approval with this building permit application.
5. I will ensure that a completed signed copy of this Certificate of Compliance shall be made available with the building permit(s) issued for the building, and made available to the enforcement agency for all applicable inspections. I understand that a completed signed copy of this Certificate of Compliance is required to be included with the documentation the builder provides to the building owner at occupancy.

Responsible Designer Name: Scott Wheeler	Responsible Designer Signature:
Company: The Engineering Enterprise	Signature Date: August 14, 2017
Address: 1125 High Street	License: E015491
City/State/Zip Auburn, CA 95603	Phone: (530) 886-8556

CA Building Energy Efficiency Standards - 2016 Nonresidential Compliance August 2016

STATE OF CALIFORNIA
OUTDOOR LIGHTING POWER ALLOWANCES
CEC-NRCC-LTO-03-E (Revised 01/16) CALIFORNIA ENERGY COMMISSION
CERTIFICATE OF COMPLIANCE NRCC-LTO-03-E
Outdoor Lighting Power Allowances (Page 1 of 4)
Project Name: COM Organic Farm Classrooms | Date Prepared: August 14, 2017

A. Outdoor Lighting Power Allowance Summary

1. Genral Hardscape Lighting Power Allowance (Site Total from Section B of NRCC-LTO-03-E) — 1. 1101.86

2. Additional Specific "use it or lose it" Lighting Power Allowances listed in each of these cells shall be identical to total allowed watts determined in Section C-1 to C-4 of NRCC-LTI-04-E

PER APPLICATION from Section C-1		PER UNIT LENGTH (SALES FRONTAGE) from Section C-2		PER HARDSCAPE AREA (ORNAMENTAL LIGHTING) from Section C-3		PER SPECIFIC AREA from Section C-4		
	+		+		+		=	2.

3. **Sum Total ALLOWED** Outdoor Lighting Wattage (add rows 1 and 2) — 3. 1101.86

B. General Hardscape Lighting Power Allowance From Table 140.7-A

Area Wattage Allowance (AWA)				Linear Wattage Allowance (LWA)			Initial Wattage Allowance (IWA)	Total General Hardscape Lighting Allowance
01	02	03	04	05	06	07	08	09
Name of area	Illuminated Hardscape Area	AWA Per Square Foot	AWA (B02 x B03)	Perimeter Length of General Hardscape	LPA per Linear Foot	LWA (B05 x B06)	IWA (Watts)	B04 + B07 + B08
WALKWAY	6024	0.04	240.96	974	0.35	340.9	520	1101.86
							TOTAL	1101.86

CA Building Energy Efficiency Standards - 2016 Nonresidential Compliance January 2016

STATE OF CALIFORNIA
OUTDOOR LIGHTING POWER ALLOWANCES
CEC-NRCC-LTO-03-E (Revised 01/16) CALIFORNIA ENERGY COMMISSION
CERTIFICATE OF COMPLIANCE NRCC-LTO-03-E
Outdoor Lighting Power Allowances (Page 2 of 4)
Project Name: COM Organic Farm Classrooms | Date Prepared: August 14, 2017

C. ADDITIONAL "USE IT OR LOSE IT" OUTDOOR LIGHTING POWER ALLOWANCES FOR SPECIFIC APPLICATIONS

The additional specific outdoor lighting power allowance shall be smaller of the allowed lighting power or the actual lighting power used.
Use Outdoor Lighting Zone (OLZ) that is documented on page 1 of NRCC-LTO-01-E to calculate the specific wattage allowances.

C-1. WATTAGE ALLOWANCE PER APPLICATION – Table 140.7-B

Available only for qualifying locations, which include Building Entrances or Exits; Primary Entrances to Senior Care Facilities, Police Stations, Hospitals, Fire Stations, and Emergency Vehicle Facilities; Drive Up Windows; Vehicle Servcice Station Uncovered Fuel Dispenser, ATM Machine Lighting
If more than one luminaire type is used per location, use multiple rows for that location

01	02	03	04	05	06	07	08	09	10
	ALLOTED WATTS			DESIGN WATTS					
Name of Location for Which Allowance is Claimed	Number of Qualifying Locations	Wattage Allowance per Qualifying Location	Alloted Watts (02 x 03)	Luminaire Code or Symbol	Luminaire Description	Luminaire Quantity	Watts per Luminaire	Design Watts (07 x 08)	Allowed Watts (smaller of 04 or 09)
								Sum total allowance per application on this site:	

C-2. WATTAGE ALLOWANCE PER UNIT LENGTH (Sales Frontage) from Table 140.7-B

If more than om luminaire type is used per location, use multiple rows for that location

01	02	03	04	05	06	07	08	09	10
	ALLOTED WATTS			DESIGN WATTS					
Name of Location for Which Allowance is Claimed	Linear Feet of Sales Frontage	Wattage Allowance per Linear Foot	Alloted Watts (02 x 03)	Luminaire Code or Symbol	Luminaire Description	Luminaire Quantity	Watts per Luminaire	Design Watts (07 x 08)	Allowed Watts (smaller of 04 or 09)
								Sum total allowance for sales frontage on this site:	

CA Building Energy Efficiency Standards - 2016 Nonresidential Compliance January 2016

STATE OF CALIFORNIA
OUTDOOR LIGHTING POWER ALLOWANCES
CEC-NRCC-LTO-03-E (Revised 01/16) CALIFORNIA ENERGY COMMISSION
CERTIFICATE OF COMPLIANCE NRCC-LTO-03-E
Outdoor Lighting Power Allowances (Page 3 of 4)
Project Name: COM Organic Farm Classrooms | Date Prepared: August 14, 2017

C-3. WATTAGE ALLOWANCE PER SQUARE FOOT OF HARDSCAPE AREA (Ornamental Lighting) – Table 140.7-B

- Allowance for the total site illuminated hardscape area. Lunimaires qualifying for this allowance shall be rated for 100 watts or less as determined in accordance with Section 130.0(c), and shall be post-top luminaires, lanterns, pendant luminaires, or chandeliers.
- If more than om luminaire type is used per location, use multiple rows for that location

01	02	03	04	05	06	07	08	09	10
	ALLOTED WATTS			DESIGN WATTS					
Name of area for which ornamental allowance is claimed	Square feet of Hardscape	Wattage Allowance per square foot	Allotted Watts (02 x 03)	Luminaire Code or Symbol	Luminaire Description	Luminaire Quantity	Watts per luminaire	Design Watts (07 x 08)	Allowed Watts (smaller of 04 or 09)
								Sum total allowance for ornamental lighting on this site:	

C-4. WATTAGE ALLOWANCE PER SQUARE FOOT OF SPECIFIC AREA – Table 140.7-B

- Allowances for Building Facades; Outdoor Sales Lots; Vehicle Service Station Hardscape; Vehicle Service Station Canopies; Sales Canopies; Non-sales Canopies; Guard Stations; Student Pick-up/Drop-off sone: Outdoor Dining; Special Security Lighting for Retail Parking and Pedestrian Hardscape
- If more than om luminaire type is used per location, use multiple rows for that location

01	02	03	04	05	06	07	08	09	10
	ALLOTED WATTS			DESIGN WATTS					
Name of Location for which allowance is claimed	Illuminated Area of Application	Wattage Allowance per square foot	Allotted Watts (02 x 03)	Luminaire Code or Symbol	Luminaire Description	Luminaire Quantity	Watts per luminaire	Design Watts (07 x 08)	Allowed Watts (smaller of 04 or 09)
								Sum total allowance for specific area on the site:	

CA Building Energy Efficiency Standards - 2016 Nonresidential Compliance January 2016

STATE OF CALIFORNIA
OUTDOOR LIGHTING POWER ALLOWANCES
CEC-NRCC-LTO-03-E (Revised 01/16) CALIFORNIA ENERGY COMMISSION
CERTIFICATE OF COMPLIANCE NRCC-LTO-03-E
Outdoor Lighting Power Allowances (Page 4 of 4)
Project Name: COM Organic Farm Classrooms | Date Prepared: August 14, 2017

DOCUMENTATION AUTHOR'S DECLARATION STATEMENT

1. I certify that this Certificate of Compliance documentation is accurate and complete.

Documentation Author Name: Mabel Alcantara	Documentation Author Signature:
Company: The Engineering Enterprise	Signature Date: August 14, 2017
Address: 1125 High Street	CEA/HERS Certification (if applicable):
City/State/Zip Auburn, CA 95603	Phone: (530) 886-8556

RESPONSIBLE PERSON'S DECLARATION STATEMENT

I certify the following under penalty of perjury, under the laws of the State of California:
1. The information provided on this Certificate of Compliance is true and correct.
2. I am eligible under Division 3 of the Business and Professions Code to accept responsibility for the building design or system design identified on this Certificate of Compliance (responsible designer).
3. The energy features and performance specifications, materials, components, and manufactured devices for the building design or system design identified on this Certificate of Compliance conform to the requirements of Title 24, Part 1 and Part 6 of the California Code of Regulations.
4. The building design features or system design features identified on this Certificate of Compliance are consistent with the information provided on other applicable compliance documents, worksheets, calculations, plans and specifications submitted to the enforcement agency for approval with this building permit application.
5. I will ensure that a completed signed copy of this Certificate of Compliance shall be made available with the building permit(s) issued for the building, and made available to the enforcement agency for all applicable inspections. I understand that a completed signed copy of this Certificate of Compliance is required to be included with the documentation the builder provides to the building owner at occupancy.

Responsible Designer Name: Scott Wheeler	Responsible Designer Signature:
Company: The Engineering Enterprise	Signature Date: August 14, 2017
Address: 1125 High Street	License: E015491
City/State/Zip Auburn, CA 95603	Phone: (530) 886-8556

CA Building Energy Efficiency Standards - 2016 Nonresidential Compliance January 2016

LPAS

2484 Natomas Park Drive Suite 100 Sacramento CA 95833
916 443 0335 lpasdesign.com Architecture + Design

ORGANIC FARM CLASSROOMS INCREMENT 1

INDIAN VALLEY CAMPUS
COLLEGE OF MARIN

NOVATO, CA

FILE NUMBER: 21-C1
IDENTIFICATION STAMP
DIVISION OF THE STATE ARCHITECT
01 - 116913 INCR: 1
AC RE FLS ED SSR CD
DATE 01/12/2018

ARCHITECT'S STAMP APPROVAL

THIS DOCUMENT CONTAINS INFORMATION THAT IS PROPRIETARY TO LPAS, INC. AND IS FURNISHED FOR THE PURPOSES OF REVIEW, BIDDING OR CONSTRUCTION OF THE PROJECT LISTED IN THE JOB TITLE BOX ABOVE AND SHALL NOT BE USED FOR ANY OTHER PURPOSE OR RELEASED TO ANY OTHER PARTY WITHOUT THE WRITTEN CONSENT OF LPAS, INC. INFORMATION CONTAINED HEREIN IS AN INSTRUMENT OF PROFESSIONAL SERVICES AND SHALL REMAIN THE PROPERTY OF LPAS, INC. ALL RIGHTS RESERVED COPYRIGHT © 2009.

THIS DRAWING IS NOT FINAL OR TO BE USED FOR CONSTRUCTION UNTIL IT IS SIGNED BY THE ARCHITECT AND ENGINEER.

CONSULTANT

The Engineering Enterprise
Consulting Engineers
1125 HIGH STREET
AUBURN, CA 95603
(530) 886-8556

REGISTERED PROFESSIONAL ENGINEER
SCOTT WHEELER
No. E015491
Exp. 06/30/19
ELECTRICAL
STATE OF CALIFORNIA

TITLE 24 SHEETS

PROJECT NO: 1102-0005
DATE: 11-17-2017

SHEET NO:

E0.03

CONSTRUCTION SET

NUMBERED SHEET NOTES

1. PROVIDE CONNECTION TO BUILDING FOR TELECOM AND FIRE ALARM CONDUIT PER DETAIL E/E4.01.
2. CONTRACTOR SHALL PROVIDE TWO 2" AND ONE 1" UNDERGROUND CONDUIT FOR LOW VOLTAGE PATHWAY BETWEEN EXISTING BUILDING AND NEW PORTABLE BUILDINGS.
3. CONTRACTOR SHALL PROVIDE A NEW FIRE ALARM BOOSTER PANEL. FIELD VERIFY EXACT LOCATION. ELECTRICAL CONTRACTOR SHALL PROVIDE 120V DEDICATED CIRCUIT WITH A RED LOCKING CIRCUIT BREAKER.
4. EXISTING TELECOM PANEL. NEW IDF CABINET IN CLASSROOM BUILDING SHALL BE FED FROM THIS PANEL.
5. NEW 24"X24"X24" IDF CABINET MOUNTED ABOVE FLOOR CABINET AND AT LEAST 7" BELOW CEILING IN NEW MODULAR BUILDING. SERVICES ALL TELECOM & SIGNAL DEVICES IN NEW MODULAR BUILDINGS 1, 2, AND 3. REFER TO DETAIL F/E4.01 FOR INSTALLATION REQUIREMENTS.
6. CONDUIT MUST BE OSP RATED.
7. PROVIDE GROUNDWELL PER D/E4.01. BOND BUILDING PER A/E4.01.
8. REFER TO POWER ONE-LINE DIAGRAM, SHEET E0.2, FOR POWER FEEDER REQUIREMENTS.
9. TRANSFORMER TX-LM MOUNTED ON CONCRETE PAD. REFER TO DETAIL I/E4.01 FOR HOUSEKEEPING PAD ANCHORAGE DETAILS.
10. EXISTING FIRE ALARM CONTROL PANEL.
11. USE THE (E) CONDUIT IN THE (E) PULLBOX TO CONNECT TO DISTRIBUTION BOARD CY.

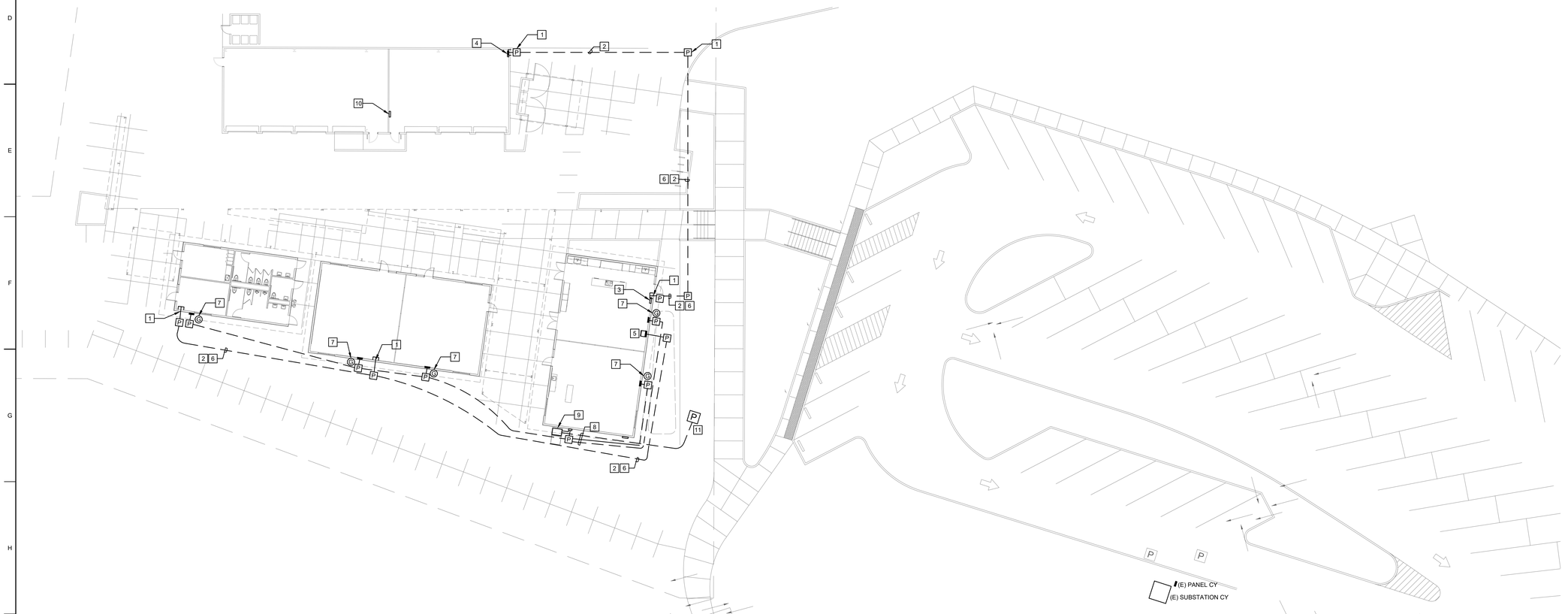

A E1.01 POWER & CONDUIT SITE PLAN

SCALE:1/16" = 1'-0"

LPAS
2484 Natomas Park Drive Suite 100 Sacramento CA 95833
916 443 0335 lpasdesign.com Architecture + Design

ORGANIC FARM CLASSROOMS INCREMENT 2

INDIAN VALLEY CAMPUS
COLLEGE OF MARIN

NOVATO, CA

FILE NUMBER: 21-C1

IDENTIFICATION STAMP
DIVISION OF THE STATE ARCHITECT
01 - 116913 INCR: 1
AC RE FLS ED SSR CD
DATE 01/12/2018

ARCHITECT'S STAMP APPROVAL

THIS DOCUMENT CONTAINS INFORMATION THAT IS PROPRIETARY TO LPAS, INC. AND IS FURNISHED FOR THE PURPOSES OF REVIEW, BIDDING OR CONSTRUCTION OF THE PROJECT LISTED IN THE JOB TITLE BOX ABOVE AND SHALL NOT BE USED FOR ANY OTHER PURPOSE OR RELEASED TO ANY OTHER PARTY WITHOUT THE WRITTEN CONSENT OF LPAS, INC. INFORMATION CONTAINED HEREIN IS AN INSTRUMENT OF PROFESSIONAL SERVICES AND SHALL REMAIN THE PROPERTY OF LPAS, INC. ALL RIGHTS RESERVED COPYRIGHT © 2009.

THIS DRAWING IS NOT FINAL OR TO BE USED FOR CONSTRUCTION UNTIL IT IS SIGNED BY THE ARCHITECT AND ENGINEER.

CONSULTANT

The Engineering Enterprise
Consulting Engineers
1125 HIGH STREET
AUBURN, CA 95603
(530) 886-8556

REGISTERED PROFESSIONAL ENGINEER
SCOTT WHEELER
No. E015491
Exp. 06/30/19
STRUCTURAL
STATE OF CALIFORNIA

POWER & CONDUIT SITE PLAN

PROJECT NO: 1102-0005
DATE: 12-13-2017

SHEET NO:

E1.01

FOR CONSTRUCTION

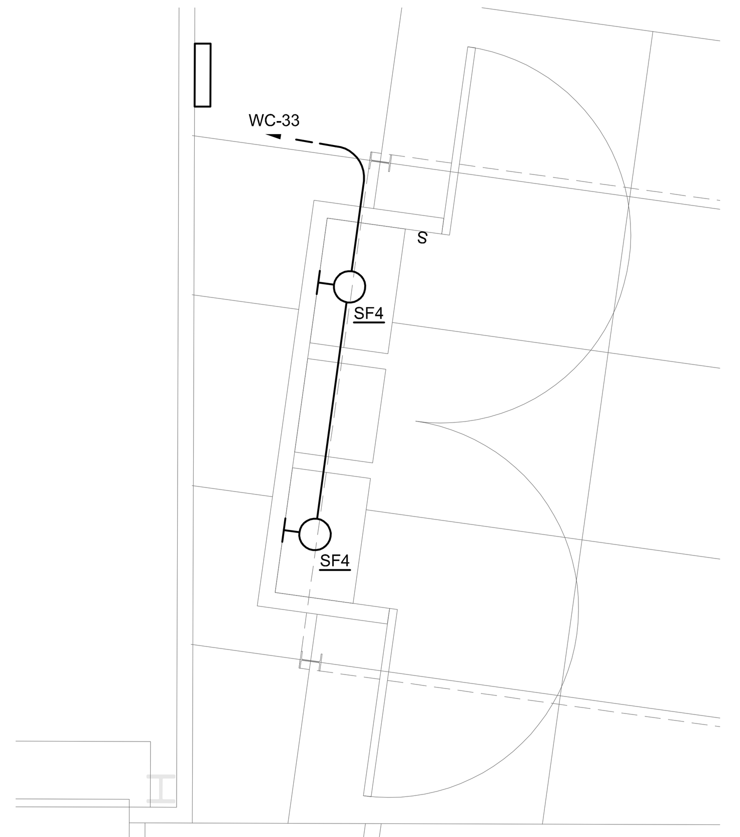

B E1.02 FARM STAND LIGHTING PLAN

SCALE:1/4" = 1'-0"

GENERAL SHEET NOTES

CBC SEC. 1205.7.1 LIGHTING REQUIREMENTS SHALL BE BASED ON THE RECOMMENDATIONS OF THE MOST CURRENT EDITION OF THE ILLUMINATION ENGINEERING SOCIETY LIGHTING HANDBOOK, THE FOLLOWING LIGHTING STANDARDS SHALL BE USED FOR ALL NEW CONSTRUCTION OF OPEN PARKING FACILITIES, COVERED PARKING FACILITIES AND PRIMARY WALKWAYS:

1. OPEN AND COVERED PARKING FACILITIES.
   - 1.1 MEDIUM-LEVEL ACTIVITY USAGE WHEN MEDIUM USAGE IS PRESENT.
   - 1.2 HIGH-LEVEL ACTIVITY USAGE WHEN HIGH USAGE IS PRESENT.
2. PRIMARY CAMPUS WALKWAYS.
   - 2.1 MEDIUM-LEVEL ACTIVITY USAGE WHEN MEDIUM USAGE IS PRESENT.
   - 2.2 HIGH-LEVEL ACTIVITY USAGE WHEN HIGH USAGE IS PRESENT.

NUMBERED SHEET NOTES

1. DUPLEX RECEPTACLE/USB CHARGER COMBO WITH GALVANIZED FACE PLATES AND GRAY PLUGS MOUNTED AT 2'-0" ABOVE GROUND TO WEB OF COLUMN.
2. COMBO DUPLEX RECEPTACLE/USB CHARGER LOCATED IN CONCRETE BLEACHER SEATING.
3. DEDICATED CIRCUIT FOR REFRIGERATOR.
4. RECEPTACLES ARE MOUNTED ON OPPOSITE SIDE OF COLUMN AS LIGHTS SF2. RECEPTACLE IS A COMBO DUPLEX RECEPTACLE/USB CHARGER MOUNTED 2' AFF.
5. ROUTE CONDUIT TO PANEL WC VIA LCP.
6. PROVIDE A GREENGATE CK4A - CONTROLKEEPER 4A LIGHTING CONTROL PANEL IN NEMA 3R ENCLOSURE. LCP SHALL UTILIZE 2 RELAYS TO TO CONTROL PATHWAY AND CANOPY LIGHTS. THE LCP SHALL SWEEP ALL LIGHTS ON/OFF PER TIME CLOCK.
7. CONNECT TO EXISTING LIGHTING CIRCUIT FOR EXTERIOR WALL-MOUNTED LIGHTS.
8. SF2 MUST BE MOUNTED AT 86" ABOVE GRADE.

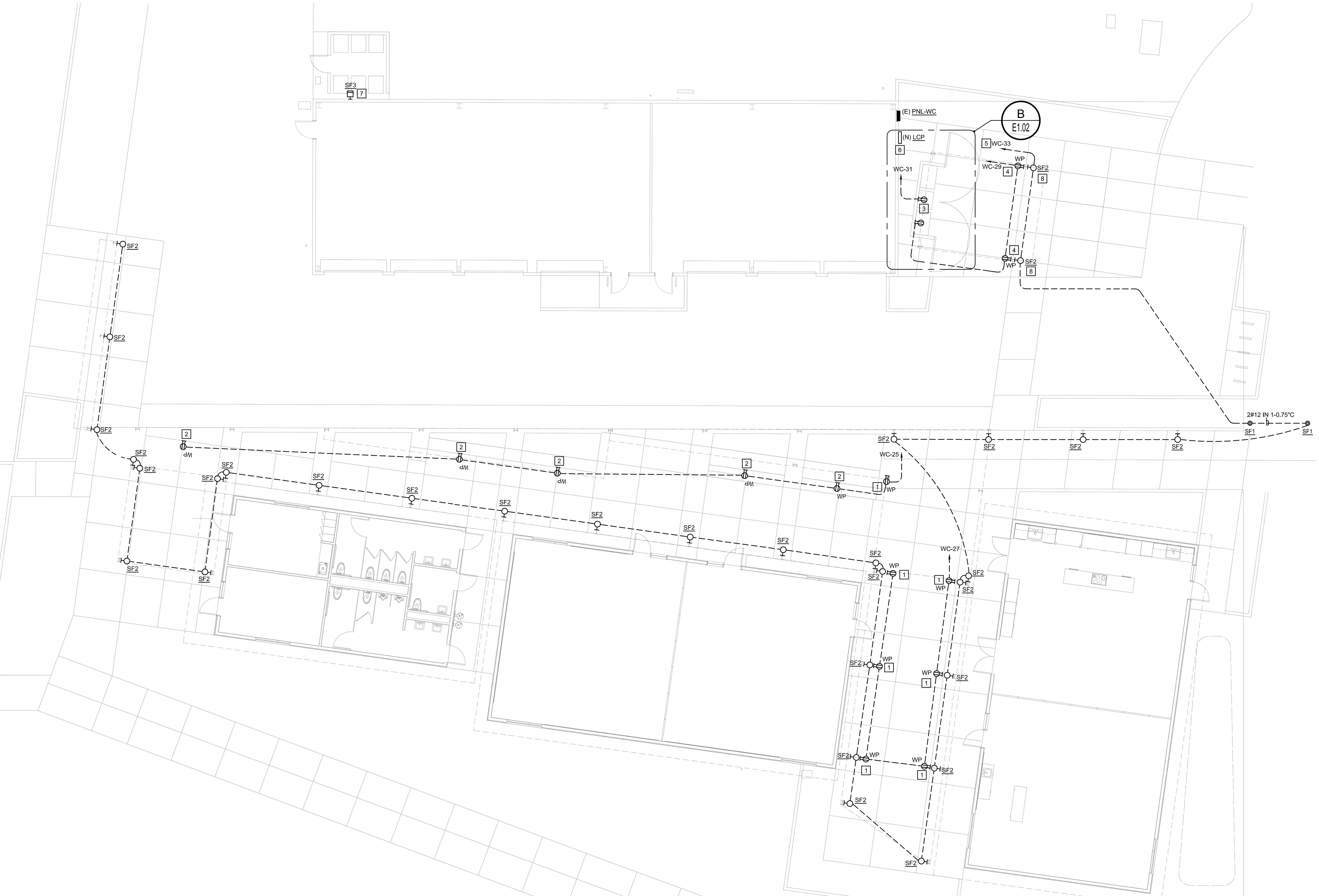

A E1.02 ELECTRICAL SITE PLAN

SCALE:1/8" = 1'-0"

LPAS

2484 Natomas Park Drive Suite 100 Sacramento CA 95833
916 443 0335 lpasdesign.com Architecture + Design

ORGANIC FARM CLASSROOMS INCREMENT 2

INDIAN VALLEY CAMPUS
COLLEGE OF MARIN

NOVATO, CA

FILE NUMBER: 21-C1
IDENTIFICATION STAMP
DIVISION OF THE STATE ARCHITECT
01 - 116913 INCR: 1
AC RE FLS ED SSR CD
DATE 01/12/2018

ARCHITECT'S STAMP APPROVAL

THIS DOCUMENT CONTAINS INFORMATION THAT IS PROPRIETARY TO LPAS, INC. AND IS FURNISHED FOR THE PURPOSES OF REVIEW, BIDDING OR CONSTRUCTION OF THE PROJECT LISTED IN THE JOB TITLE BOX ABOVE AND SHALL NOT BE USED FOR ANY OTHER PURPOSE OR RELEASED TO ANY OTHER PARTY WITHOUT THE WRITTEN CONSENT OF LPAS, INC. INFORMATION CONTAINED HEREIN IS AN INSTRUMENT OF PROFESSIONAL SERVICES AND SHALL REMAIN THE PROPERTY OF LPAS, INC. ALL RIGHTS RESERVED COPYRIGHT © 2009.

THIS DRAWING IS NOT FINAL OR TO BE USED FOR CONSTRUCTION UNTIL IT IS SIGNED BY THE ARCHITECT AND ENGINEER.

CONSULTANT

The Engineering Enterprise
Consulting Engineers
1125 HIGH STREET
AUBURN, CA 95603
(530) 886-8556

REGISTERED PROFESSIONAL ENGINEER
SCOTT WHEELER
No. E015491
Exp. 06/30/19
ELECTRICAL
STATE OF CALIFORNIA

POWER & LIGHTING PLAN

PROJECT NO: 1102-0005
DATE: 12-13-2017

SHEET NO:

E1.02

FOR CONSTRUCTION

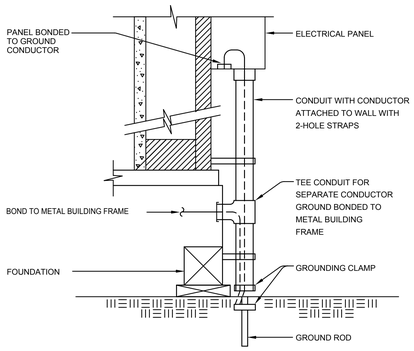

NOTES:

1. SIZE OF CONDUCTORS SHALL COMPLY WITH NEW TABLE CEC 250-66.
2. BOND SEPARATE CONDUCTORS FROM GROUND ROD TO ELECTRICAL PANEL AND TO METAL BUILDING FRAME (NEC 250-52). IN ADDITION TO THE DETAIL SHOWN ABOVE, BOND THE ELECTRICAL GROUND TO THE METAL UNDERGROUND WATER PIPE IN DIRECT CONTACT WITH THE EARTH FOR 10' OR MORE, IF AVAILABLE (CEC 250.52).
3. ALL MODULES OF METAL FRAME BUILDINGS SHALL BE ELECTRICALLY BONDED TOGETHER. BOLTING IS NOT ACCEPTABLE BONDING. THIS INCLUDES ANY METAL RAMPS OR ACCESS ACCESSORIES.
4. CHECK RESISTANCE TO GROUND. IF RESISTANCE EXCEEDS 25 OHMS, INSTALL ADDITIONAL GROUND ROD GREATER THAN 6' AWAY (NEC 250-56). ONCE THE SECOND GROUND ROD IS INSTALLED, ADDITIONAL GROUND RESISTANCE TESTING IS NOT REQUIRED.
5. WHERE MODULAR BUILDINGS ARE GROUPED TOGETHER, A GROUND ROD MAY BE INSTALLED AT THE END BUILDINGS AND A GROUND RING MAY BE INSTALLED BETWEEN THEM. EACH INTERMEDIATE MODULAR BUILDING MAY BE BONDED TO THAT GROUND RING. WHERE THIS METHOD IS USED, GROUND RESISTANCE TESTING SHALL NOT BE REQUIRED.
6. WHERE MODULAR BUILDINGS ARE INSTALLED ON CONCRETE FOUNDATIONS, A UFER GROUND SHALL BE INSTALLED IN THE FOOTING PER CEC 250.52(A)(3)
7. OTHER GROUNDING METHODS IDENTIFIED IN CEC 250 SHALL BE ACCEPTABLE MEANS TO ACHIEVE ADEQUATE GROUNDING OF METAL BUILDINGS IN COMPLIANCE WITH THE ABOVE.
8. GROUNDING TEST SHALL BE DONE IN THE PRESENCE OF THE INSPECTOR OF RECORD.

A E4.01 BUILDING GROUNDING DETAIL
SCALE:NTS

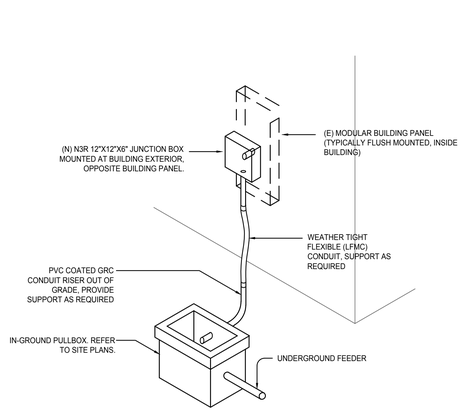

NOTE: COORDINATE PANEL LOCATION WITH BUILDING MANUFACTURER OR EXISTING CONDITIONS FOR PLACEMENT OF IN-GROUND PULLBOX TO INSURE MINIMAL ABOVE-GROUND RISER.

B E4.01 MOD BUILDING PANEL CONNECTION
SCALE:NTS

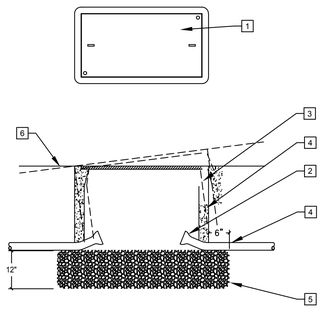

1. CONCRETE COVER (TO SUIT APPLICATION) WITH HOLD DOWN BOLTS. LABEL COVER AS REQUIRED.
2. BELL ENDS TYP.
3. PRE CAST REINFORCED CONCRETE BOX, SIZE PER PLANS.
4. SEAL AROUND CONDUIT, BOX & JUNCTION OF EXTENSION(S) WITH MORTAR
5. CRUSHED ROCK.
6. ALIGN WITH FINISHED GRADE AS REQUIRED

C E4.01 IN GROUND PULLBOX/HANDHOLE
SCALE:NTS

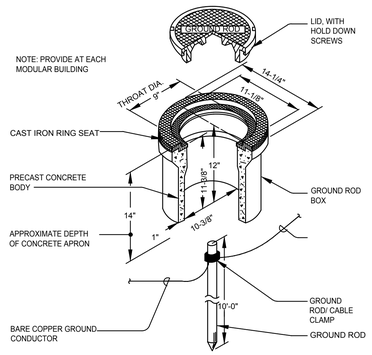

D E4.01 GROUND ROD
SCALE:NTS

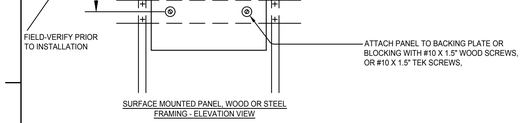

NOTES:

1. USE FENDER WASHERS ON ALL SCREWS.
2. WEIGHT- 200LBS. MAXIMUM

6"x16 GA. BACKING PLATE, LENGTH AS REQUIRED, LOCATE AT TOP AND BOTTOM. SECURE TO STRUCTURAL FRAMING. SEE STRUCTURAL AND/OR ARCHITECTURAL PLANS FOR BACKING PLATE DETAILS.

SURFACE MOUNTED PANEL.

ATTACH PANEL TO BACKING PLATE OR BLOCKING WITH #10 X 1.5" WOOD SCREWS, OR #10 X 1.5" TEK SCREWS.

SURFACE MOUNTED PANEL, WOOD OR STEEL FRAMING - ELEVATION VIEW

E E4.01 SURFACE MOUNTED PANELBOARD
SCALE:NTS

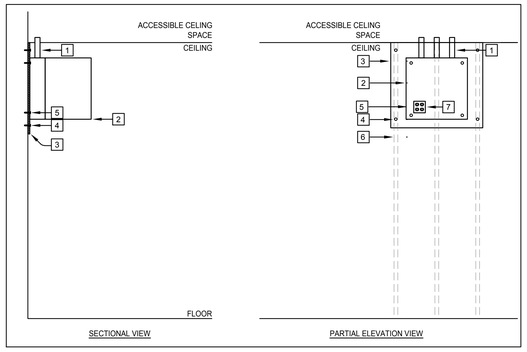

F E4.01 IDF CABINET INSTALLATION DETAIL
SCALE:1/2" = 1'-0"

1. 3-2" CONDUIT STUBS INTO ACCESSIBLE CEILING.
2. PROVIDE NEW WALL-MOUNTED IDF CABINET, GREAT LAKES MODEL GL24WS-PV. MAXIMUM WEIGHT 250#. PROVIDE WITH FAN ASSEMBLY 7217WS WITH 4 FAN FILTERS, POWER STRIP 7219, GROUND BAR CBB-19 AND GROUND KIT GR102 (AND BOND TO BUILDING GROUND ROD). REFER TO F/E4.01 FOR INSTALLATION REQUIREMENTS.
3. 0.75" THICK PLYWOOD BACKBOARD, 24"W X 60"H.
4. ATTACH BACKBOARD TO AT LEAST TWO STUDS, 3X EACH STUD, PROVIDE #10 X 2" FLATHEAD WOOD SCREWS.
5. ATTACH CABINET TO BACKBOARD WITH ⅜" X 1" LAG BOLT AND 1" WASHER, TYPICAL OF 4.
6. MODULAR BUILDING FRAMING
7. DOUBLE DUPLEX RECEPTACLE LOCATED IN CABINET. PROVIDE DEDICATED CIRCUIT FROM MODULAR BUILDING POWER PANEL.

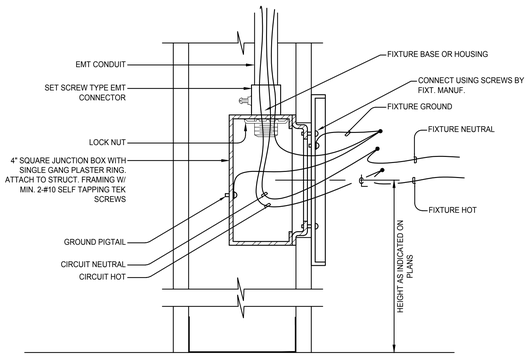

G E4.01 WALL MOUNTED FIXTURE
SCALE:NONE

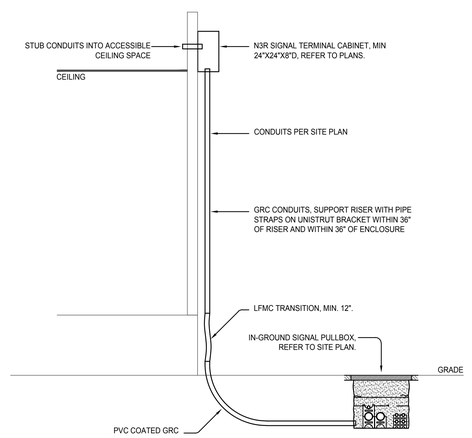

H E4.01 SIGNAL SYSTEM BUILDING CONNECTION
SCALE:NTS

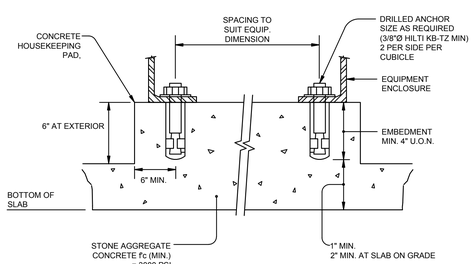

TRANSFORMER : ATTACH 2X PER SIDE, MAX WEIGHT 1,250#

I E4.01 HOUSEKEEPING PAD ANCHORAGE
SCALE:NTS

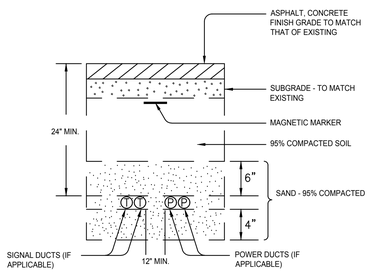

J E4.01 JOINT TRENCH
SCALE:NTS

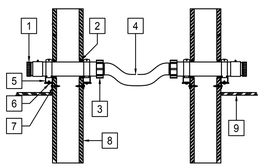

1. PLASTIC BUSHING ON SET-SCREW CONNECTOR
2. CAULKING ACCORDING TO FIRE RATING, TYPICAL
3. WATER-TIGHT CONNECTORS IN ACCORDANCE WITH SPECIFICATIONS
4. WATER-TIGHT FLEXIBLE CONDUIT WITH ENOUGH SLACK TO ALLOW BUILDING TO MOVE 12" WITHOUT OVER STRESSING CONDUIT. REFER TO PLANS FOR CONDUIT SIZES AND QUANTITY.
5. CHANNEL STRUT BOLTED TO HEAVY ELL BRACKET
6. 3/8" X 1-1/2" MACHINE BOLT WITH WASHERS BOTH SIDES AND HEX NUT
7. 3/8" LAG SCREW, MIN. 2-1/2" EMBED
8. EXTERIOR OF BUILDING
9. DROP CEILING INSIDE BUILDING

K E4.01 CONDUIT PENETRATION
SCALE:NTS

LPAS
2484 Natomas Park Drive Suite 100 Sacramento CA 95833
916 443 0335 lpasdesign.com Architecture + Design

ORGANIC FARM CLASSROOMS INCREMENT 1

INDIAN VALLEY CAMPUS
COLLEGE OF MARIN

NOVATO, CA

FILE NUMBER: 21-C1
IDENTIFICATION STAMP
DIVISION OF THE STATE ARCHITECT
01 - 116913 INCR: 1
AC RE FLS ED SSR CD
DATE 01/12/2018

ARCHITECT'S STAMP APPROVAL

THIS DOCUMENT CONTAINS INFORMATION THAT IS PROPRIETARY TO LPAS, INC. AND IS FURNISHED FOR THE PURPOSES OF REVIEW, BIDDING OR CONSTRUCTION OF THE PROJECT LISTED IN THE JOB TITLE BOX ABOVE AND SHALL NOT BE USED FOR ANY OTHER PURPOSE OR RELEASED TO ANY OTHER PARTY WITHOUT THE WRITTEN CONSENT OF LPAS, INC. INFORMATION CONTAINED HEREIN IS AN INSTRUMENT OF PROFESSIONAL SERVICES AND SHALL REMAIN THE PROPERTY OF LPAS, INC. ALL RIGHTS RESERVED COPYRIGHT © 2009.

THIS DRAWING IS NOT FINAL OR TO BE USED FOR CONSTRUCTION UNTIL IT IS SIGNED BY THE ARCHITECT AND ENGINEER.

CONSULTANT

The Engineering Enterprise
Consulting Engineers
1125 HIGH STREET
AUBURN, CA 95603
(530) 886-8556

REGISTERED PROFESSIONAL ENGINEER SCOTT WHEELER No. E015491 Exp. 06/30/19 STATE OF CALIFORNIA

DETAILS

PROJECT NO: 1102-0005
DATE: 11-17-2017

SHEET NO: **E4.01**

CONSTRUCTION SET

COMPLIANCE NOTES

MECHANICAL AND PLUMBING EQUIPMENT SHALL CONFORM TO THE FOLLOWING AS STATED IN THE ENERGY EFFICIENCY STANDARDS, 2016.

1. BE CERTIFIED BY THE MANUFACTURER AS COMPLYING WITH THE EFFICIENCY REQUIREMENTS AS PRESCRIBED IN SECTIONS:

111. APPLIANCES REGULATED BY THE APPLIANCE EFFICIENCY STANDARDS:
112. HVAC EQUIPMENT EFFICIENCY AND PACKAGED CONTROLS:
113. SERVICE WATER HEATING EFFICIENCY AND CONTROLS:
114. RESTRICTIONS ON PILOT LIGHTS:

2. BE SPECIFIED AND INSTALLED IN ACCORDANCE WITH SECTIONS.

121. REQUIREMENTS FOR VENTILATION:
122. REQUIRED CONTROLS FOR HVAC SYSTEMS:
123. REQUIREMENTS FOR PIPE INSULATION:
124. REQUIREMENTS FOR DUCT INSULATION:

PLUMBING FIXTURE CONNECTION SCHEDULE

FIXTURE NAME	SYMBOL	VENT	WASTE		COLD WATER		HOT WATER	
			BR	RI	BR	RI	BR	RI
SINK	S	1½"	2"	1½"	¾"	½"	¾"	½"

PIPING MATERIAL SCHEDULE

1. SOIL, STORM, WASTE AND VENT PIPE UNDERGROUND AND TO 6" ABOVE GROUND: SERVICE WEIGHT CAST IRON SOIL PIPE AND FITTINGS, ASPHALTIC COATED, CONFORMING TO CAST IRON SOIL PIPE INSTITUTE STANDARD #301 ASTM A-888 OR ASTM A-74 AND SO STAMPED. JOINTS SHALL BE NO-HUB CONFORMING TO CAST IRON SOIL PIPE INSTITUTE STANDARD #310; TY-SEAL OR EQUAL WITH GASKETS CONFORMING TO ASTM C 564 AND ASTM A74. SUSPENDED PIPE WITH NO-HUB JOINTS SHALL HAVE A SWAYBRACE AT 20'-0" MAXIMUM SPACING.

2. WASTE AND VENT PIPE ABOVE GROUND FROM LAVATORIES OR SINKS, RAINWATER LEADERS AND OVERFLOWS ABOVE THE FLOOR: CAST IRON SOIL PIPE AND FITTINGS WITH NO HUB JOINTS CONFORMING TO THE REQUIREMENTS OF CISPI STANDARD 301, ASTM A-888 OR ASTM A-74 FOR ALL PIPE AND FITTINGS. JOINTS SHALL CONFORM TO CISPI 310 AND SHALL BE HUBLESS COUPLINGS COMPOSED OF STAINLESS STEEL SHIELD, CLAMP ASSEMBLY AND ELASTOMERIC SEALING SLEEVE. DWV DRAINAGE TUBING AND FITTINGS ARE ACCEPTABLE WHEN APPROVED. CONDENSATE DRAINS SHALL BE TYPE L HARD COPPER, WITH LONG SWEEP ELBOWS AND CLEANOUT TEES AT EACH CHANGE IN DIRECTION. CONNECT CONDENSATE DRAINS TO AIR CONDITIONING UNITS WITH P-TRAP AND RUN TO AN APPROVED RECEPTOR AND DRY WELL. PROVIDE VIBRATION ELIMINATORS AT A.C. UNITS.

3. WATER PIPE (HOT AND COLD WATER): TYPE L COPPER TUBING, HARD TEMPER, WITH WROUGHT COPPER FITTINGS. CAPPED OR PLUGGED OUTLETS SHALL BE SCHEDULE 40 SCREWED BRASS. PROVIDE FULL SOLDER CUP FITTINGS.

PLUMBING FIXTURE SCHEDULE

S-1 SINK 1:
"JUST" MODEL SLN-ADA-2122-A-GR, 18 GA. STAINLESS STEEL, J-1174-KS
GOOSNECK FAUCET WITH AERATOR, J-35-GS-316 CUP STRAINER.

PLUMBING LEGEND

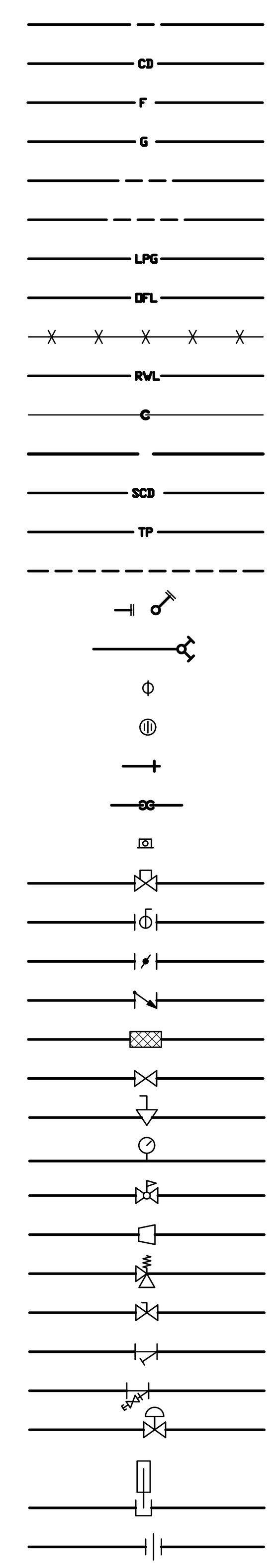

COLD WATER LINE
CONDENSATE DRAIN
FIRE SERVICE LINE
GAS
HOT WATER LINE
HOT WATER RETURN
LIQUID PETROLEUM GAS
OVERFLOW
PIPING OR EQUIPMENT TO BE REMOVED
RAINWATER LEADER
RISE OR DROP IN DIRECTION OF FLOW
SANITARY SOIL OR WASTE LINE
SECONDARY CONDENSATE DRAIN LINE
TRAP PRIMER LINE
VENT
CLEANOUT & WALL CLEANOUT
FIRE DEPARTMENT CONNECTION
FLOOR/ GRADE CLEAN OUT
FLOOR DRAIN
HOSE BIBB/ WALL HYDRANT
TRAP
TRAP PRIMER
BALANCING VALVE
BALL VALVE
BUTTERFLY VALVE
CHECK VALVE
FLEXIBLE CONNECTION
GATE VALVE
SHUT OFF COCK
PRESSURE GAUGE
PRESSURE REDUCING VALVE
REDUCER
PRESSURE & TEMPERATURE RELIEF VALVE
SHUT OFF VALVE
STRAINER
STRAINER & DRAIN VALVE WITH HOSE FITTING
SOLENOID VALVE
THERMOMETER
UNION

ABV	ABOVE
ABC, OH	ABOVE CEILING, OVERHEAD
AD	ACCESS DOOR
ADA	AMERICANS WITH DISABILITIES ACT
AFF	ABOVE FINISHED FLOOR
BR	BRANCH
CL	CENTERLINE
CO	CLEANOUT
CW	COLD WATER
DHW	DOMESTIC HOT WATER
DHWR	DOMESTIC HOT WATER RETURN
DIA, ø	DIAMETER
FC	FLEXIBLE CONNECTION
FCO	FLOOR CLEANOUT
FD	FLOOR DRAIN
FSR	FIRE SPRINKLER RISER
GCO	GRADE CLEANOUT
HW	HOT WATER
HWR	HOT WATER RETURN
I.E.	INVERT ELEVATION
(N) (E)	NEW, EXISTING
NIC	NOT IN CONTRACT
POC	POINT OF CONNECTION
P, TRV	PRESSURE & TEMPERATURE RELIEF VALVE
RPBP	REDUCED PRESSURE BACKFLOW PREVENTER
(R) (D)	RISE, DROP
RD, OFL	ROOF DRAIN, OVERFLOW
RI	ROUGH-IN
RO	RUN-OUT
SMS	SHEET METAL SCREWS
SOV	SHUT OFF VALVE
TA, FA	TO ABOVE, FROM ABOVE
TB, FB	TO BELOW, FROM BELOW
TBR	TO BE REMOVED
TP	TRAP PRIMER
UG, UF	UNDERGROUND, UNDERFLOOR
UON	UNLESS OTHERWISE NOTED
UTR	UP THROUGH ROOF
V, VR, VTR	VENT, VENT RISER, VENT THRU ROOF
WT	WATERTIGHT
WCO	WALL CLEANOUT
ZV	ZONE VALVE

PROJECT DESCRIPTION

AS ALLOWED PER IR A-11 INCREMENTS SUBMITTAL:

INCREMENT 1: SITE IMPROVEMENTS INCLUDING UTILITIES, HARDSCAPE, LANDSCAPE, SHADE STRUCTURES, ACCESS FROM PARKING LOT.

BUILDING 24 IS DSA #109778; ACCESS ONLY. BUILDING 24 IS A BARN AND IS CONSIDERED A NON-BIULDING STRUCTURE. NO WORK TO INTERIOR OF BUILDING; LIMITED WORK TO EXTERIOR OF BUILDING INCLUDING ACCESS, LIGHTING AND PAINTING.

INCREMENT 2: THREE MODULAR BUILDINGS. TWO MODULAR BUILDINGS HOUSE TWO CLASSROOMS EACH. ONE MODULAR BUILDINGS PROVIDES OFFICES AND RESTROOMS.

PARKING LOT IS DSA #: 01-116739 OTC.

MECHANICAL LEGEND

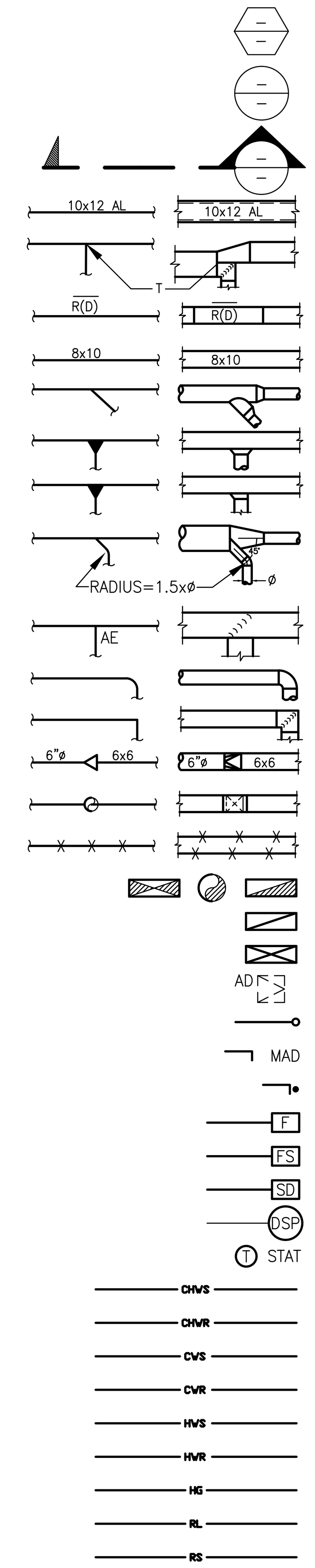

UNIT TYPE
UNIT NUMBER
DETAIL NUMBER
SHEET NUMBER ON WHICH DETAIL IS FOUND
SECTION NUMBER
SHEET ON WHICH SECTION IS FOUND
ACOUSTICALLY LINED DUCT – DIMENSIONS ARE OUTSIDE
BRANCH TAKE-OFF WITH SPLITTER DAMPER & W/ THROAT SIZE AS INDICATED. TRANSITION TO DUCT SIZES SHOWN.
DUCT RISE (DROP) IN DIRECTION OF AIR FLOW
DUCT – WIDTH x DEPTH
LATERAL WITH CONICAL TRANSITION TO DUCT SIZES INDICATED
CONICAL TEE FROM RECTANGULAR TO ROUND BRANCH
45° ENTRY TEE, RECTANGULAR BRANCH, RECTANGULAR MAIN
45° WYE, CONICAL MAIN AND BRANCH WITH 45° ELBOW, BRANCH 90° TO MAIN
TEE WITH ADJUSTABLE EXTRACTOR. RECTANGULAR MAIN, RECTANGULAR BRANCH
RADIUS ELL. SEE SPECS.
SQUARE ELL WITH TURNING VANES
TRANSITION ROUND TO RECTANGULAR
VERTICAL DUCT RISE OR DROP
DUCTS, PIPES, OR EQUIPMENT TO BE REMOVED
DUCT DROP OR RISE THRU ROOF OR FLOOR
RETURN, OUTSIDE, OR EXHAUST AIR DUCT
SUPPLY DUCT
ACCESS DOOR
AUTOMATIC CONTROL DAMPER
MANUAL AIR DAMPER
VOLUME DAMPER WITH REMOTE BALANCING DEVICE
FIRE DAMPER
FIRE SMOKE DAMPER
SMOKE DETECTOR
DUCT STATIC PRESSURE SENSOR
THERMOSTAT
CHILLED WATER SUPPLY
CHILLED WATER RETURN
CONDENSER SUPPLY
CONDENSER RETURN
HOT WATER SUPPLY
HOT WATER RETURN
HOT GAS LINE
REFRIGERANT LIQUID
REFRIGERANT SUCTION

AAV	AUTOMATIC AIR VENT
ABV	ABOVE
ABC, OH	ABOVE CEILING, OVERHEAD
AC	AIR CONDITIONING
AD	ACCESS DOOR
ADA	AMERICANS W/ DISABILITIES ACT
AE	AIR EXTRACTOR
AFF	ABOVE FINISHED FLOOR
AL	ACOUSTICALLY LINED
AHU	AIR HANDLING UNIT
APD	AIR PRESSURE DROP
BHP	BRAKE HORSEPOWER
BOD	BOTTOM OF DUCT
BR	BRANCH
BTU	BRITISH THERMAL UNIT
BTUH	BTU PER HOUR
CAV	CONSTANT AIR VOLUME
CD	CONDENSATE DRAIN
CFM, f	CUBIC FEET OF AIR PER MINUTE
CFS	CUBIC FEET PER SECOND
CL	CENTERLINE
CO	CLEANOUT
CONC.	CONCRETE
CONN.	CONNECT
CR	CONDENSATE RETURN (STEAM)
CS	CURRENT SENSOR
CU	CONDENSING UNIT
CU FT	CUBIC FEET
CU IN	CUBIC INCHES
CVB	CONSTANT VOLUME BOX
CW	COLD WATER
DB	DRY BULB
DF	DOUGLAS FIR
DIA, ø	DIAMETER
DSP	DUCT STATIC PRESSURE SENSOR
EA, OA, RA, SA	EXHAUST, OUTSIDE, RETURN & SUPPLY AIR
E.C.	ELECTRICAL CONTRACTOR
ESP	EXTERNAL STATIC PRESSURE
EWT	ENTERING WATER TEMPERATURE
FA	FACE AREA (SQUARE FEET)
FC	FLEXIBLE CONNECTION
FLA	FULL LOAD AMPS
FPI	FINS PER INCH
FPM	FEET PER MINUTE
GALV.	GALVANIZED
GA	GAUGE
GC	GENERAL CONTRACTOR
GSM	GALVANIZED SHEET METAL
HP	HORSE POWER
HWS	HOT WATER SUPPLY
HWR	HOT WATER RETURN
HZ	FREQUENCY (HERTZ)
LBS	POUNDS
LRA	LOCKED ROTOR AMPS
LWT	LEAVING WATER TEMPERATURE
MAV	MANUAL AIR VENT
MAX	MAXIMUM
MBH	BTU PER HOUR (THOUSAND)
MC	MECHANICAL CONTRACTOR
MIN	MINIMUM
MPS	MEDIUM PRESSURE STEAM
(N) (E)	NEW, EXISTING
N.C.	NORMALLY CLOSED
NEG	NEGATIVE
NIC	NOT IN CONTRACT
N.O.	NORMALLY OPEN
OBD	OPPOSED BLADE DAMPER
OC	ON CENTER
OP	OPERATING
PH	PHASE
POC	POINT OF CONNECTION
PSI	POUNDS PER SQUARE INCH
PT	PRESSURE TREATED
PTDF	PRESSURE TREATED DOUGLAS FIR
P&TRV	PRESSURE & TEMPERATURE RELIEF VALVE
RPBP	REDUCED PRESSURE BACKFLOW PREVENTER
(R) (D)	RISE, DROP
RD, OFL	ROOF DRAIN, OVERFLOW
REF	ROOF EXHAUST FAN
REQ'D	REQUIRED
RL	REFRIGERANT LIQUID
RPM	REVOLUTIONS PER MINUTE
RS	REFRIGERANT SUCTION
SAD	SEE ARCHITECTURAL DRAWINGS
SED	SEE ELECTRICAL DRAWINGS
SM	SHEET METAL
SMS	SHEET METAL SCREWS
SOV	SHUT OFF VALVE
SS	STAINLESS STEEL
SSD	SEE STRUCTURAL DRAWING
STL	STEEL
TA, FA	TO ABOVE, FROM ABOVE
TB, FB	TO BELOW, FROM BELOW
TBR	TO BE REMOVED
TCC	TEMPERATURE CONTROL CONTRACTOR
TCP	TEMPERATURE CONTROL PANEL
THK	THICK
TR	TO REMAIN
TSP	TOTAL STATIC PRESSURE
TV	TURNING VANES
TYP	TYPICAL
UG, UF	UNDERGROUND, UNDER FLOOR
UON	UNLESS OTHERWISE NOTED
UTR	UP THROUGH ROOF
VAC	VOLTS ALTERNATING CURRENT
VFD	VARIABLE FREQUENCY DRIVE
VIF	VERIFY IN FIELD
WB	WET BULB
WG	WATER GAUGE
WOG	WATER OIL GAS PRESSURE RATING
WP	WATER PRESSURE
WPD	WATER PRESSURE DROP
WT, AT	WATERTIGHT, AIRTIGHT

LPAS

2484 Natomas Park Drive Suite 100 Sacramento CA 95833
916 443 0335 lpasdesign.com Architecture + Design

ORGANIC FARM CLASSROOMS INCREMENT 1

INDIAN VALLEY CAMPUS
COLLEGE OF MARIN

NOVATO, CA

FILE NUMBER: 21-C1
IDENTIFICATION STAMP
DIVISION OF THE STATE ARCHITECT
01 - 116913 INCR: 1
AC RE FLS ED SSR CD
DATE 01/12/2018

ARCHITECT'S STAMP APPROVAL

THIS DOCUMENT CONTAINS INFORMATION THAT IS PROPRIETARY TO LPAS, INC. AND IS FURNISHED FOR THE PURPOSES OF REVIEW, BIDDING OR CONSTRUCTION OF THE PROJECT LISTED IN THE JOB TITLE BOX ABOVE AND SHALL NOT BE USED FOR ANY OTHER PURPOSE OR RELEASED TO ANY OTHER PARTY WITHOUT THE WRITTEN CONSENT OF LPAS, INC. INFORMATION CONTAINED HEREIN IS AN INSTRUMENT OF PROFESSIONAL SERVICES AND SHALL REMAIN THE PROPERTY OF LPAS, INC. ALL RIGHTS RESERVED COPYRIGHT © 2009.

THIS DRAWING IS NOT FINAL OR TO BE USED FOR CONSTRUCTION UNTIL IT IS SIGNED BY THE ARCHITECT AND ENGINEER.

CONSULTANT

TURLEY & ASSOCIATES MECHANICAL ENGINEERING GROUP, INC.
2431 Capital Avenue
Sacramento, CA 95816
(916) 325-1065
FAX: (916) 325-1075
Email: office@turleymech.com

Project Engineer:	BP	Job Number:	17186
Project Manager:	BP	Plot Date: Nov 08, 2017 - 5:02pm	
Project Drafter:	OC	Login: JTrusler	

REGISTERED PROFESSIONAL ENGINEER
No. M030446
Exp. 12/31/17
MECHANICAL
STATE OF CALIFORNIA

MECHANICAL & PLUMBING LEGEND, SCHEDULES & NOTES

PROJECT NO: 1102-0005
DATE: 11-17-2017

SHEET NO:

MP0.11

CONSTRUCTION SET

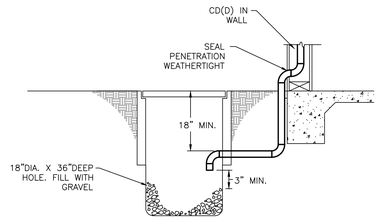

A DRY WELL DETAIL

NO SCALE

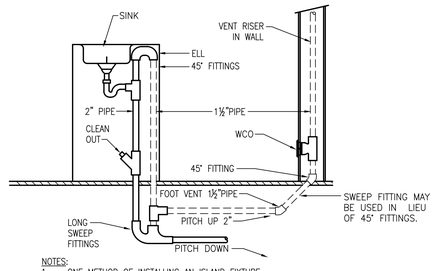

NOTES:
1. ONE METHOD OF INSTALLING AN ISLAND FIXTURE.
2. RAISE RETURN VENT AS HIGH AS POSSIBLE UNDER THE DRAIN BOARD. USE 2(45°) FITTINGS AND ONE LONG RADIUS ELBOW TO MAKE LOOP. INSTALL LONG SWEEP FITTING BELOW FLOOR AND RUN HORIZONTALLY TO NEAREST PARTITION. USE 45° FITTINGS FOR EASY STOPPAGE CLEANING.

B LOOP VENT DETAIL

NO SCALE

WATER AND WASTE SERVICE CALCULATIONS

JOB NAME: ORGANIC FARM CLASSROOM RESTROOM BLDG. DATE: 08/14/17

FIXTURE TYPE	NO.	WASTE		COLD WATER		HOT WATER		TOTAL WATER
		FU	TOTAL	FU	TOTAL	FU	TOTAL	FU
BAR SINK	0	2	0	1.5	0	1.5	0	0
BATH TUB/SHOWER	0	3	0	3	0	3	0	0
CLOTHES WASHER	0	3	0	3	0	3	0	0
DRINKING FOUNTAIN	1	0.5	0.5	0.5	0.5	0	0	0.5
HOSE BIBB	0	0	0	2.5	0	0	0	0
KITCHEN SINK (DOMESTIC)	0	3	0	1.125	0	1.125	0	0
LAUNDRY SINK	0	2	0	1.125	0	1.125	0	0
LAVATORY (SINGLE)	5	1	5	0.75	3.75	0.75	3.75	5
LAVATORY (MULTIPLE)	0	2	0	0.75	0	0.75	0	0
SERVICE SINK	0	3	0	2.25	0	2.25	0	0
FLOOR DRAIN, EMERGENCY	0	0	0	0	0	0	0	0
FLOOR SINK RECEPTOR	0	3	0	0	0	0	0	0
SHOWER	0	2	0	1.5	0	1.5	0	0
SINK	1	3	3	1.5	1.5	1.5	1.5	2
URINAL, 0.5 GPF	2	2	4	4	8	0	0	8
WASHFOUNTAIN, 1-1/2"	0	2	0	1.5	0	1.5	0	0
WATER CLOSET, 1.28 TANK	0	4	0	2.5	0	0	0	0
WATER CLOSET, 1.28 FV	7	4	28	5	35	0	0	35
ICE MAKER	0	0	0	1	0	0	0	0
PRODUCE MISTER	1	0	0	2.5	2.5	0	0	2.5
FLORAL / BREAK SINK	2	2	4	1.5	3	1.5	3	4
TOTAL FU			44.5		54.3		8.3	57.0
EQUIVALENT COLD WATER FLOW RATE (GPM):						53		
ADDITIONAL DEMAND LOAD (GPM)						0		
PRESSURE AVAILABLE AT MAIN (PSI):						50		
PRESSURE BOOSTER PUMP						0		
MINIMUM REQUIRED FIXTURE PRESSURE (PSI):						20		
ELEVATION RISE (FT):						10		
METER LOSS (PSI):						5		
BACKFLOW PREVENTER LOSS (PSI):						10	0	
ADDITIONAL LOSSES (PSI):						0		
EQUIVALENT PIPE LENGTH FROM METER TO MOST REMOTE FIXTURE (FT):						200		
FRICTION LOSS PRESSURE AVAILABLE (PSI):						10.66		
MAXIMUM ALLOWABLE FRICTION LOSS (PSI/100 FT):						5.33		
WATER FLOW VELOCITY (FPS):						5.54		
CALCULATED FRICTION HEAD LOSS (PSI/100 FT):						3.10		
MINIMUM REQUIRED 'WATER' PIPE SIZE (INCHES):						2		
MINIMUM REQUIRED 'WASTE' PIPE SIZE (INCHES):						4		
(CALCULATIONS PER THE UPC/CPC)								

WATER AND WASTE SERVICE CALCULATIONS

JOB NAME: ORGANIC FARM CLASSROOM BLDG. DATE: 08/14/17

FIXTURE TYPE	NO.	WASTE		COLD WATER		HOT WATER		TOTAL WATER
		FU	TOTAL	FU	TOTAL	FU	TOTAL	FU
BAR SINK	1	2	2	1.5	1.5	1.5	1.5	2
BATH TUB/SHOWER	0	3	0	3	0	3	0	0
CLOTHES WASHER	0	3	0	3	0	3	0	0
DRINKING FOUNTAIN	0	0.5	0	0.5	0	0	0	0
HOSE BIBB	1	0	0	2.5	2.5	0	0	2.5
KITCHEN SINK (DOMESTIC)	2	3	6	1.125	2.25	1.125	2.25	3
LAUNDRY SINK	0	2	0	1.125	0	1.125	0	0
LAVATORY (SINGLE)	0	1	0	0.75	0	0.75	0	0
LAVATORY (MULTIPLE)	0	2	0	0.75	0	0.75	0	0
SERVICE SINK	0	3	0	2.25	0	2.25	0	0
FLOOR DRAIN, EMERGENCY	0	0	0	0	0	0	0	0
FLOOR SINK RECEPTOR	0	3	0	0	0	0	0	0
SHOWER	0	2	0	1.5	0	1.5	0	0
SINK	0	3	0	1.5	0	1.5	0	0
URINAL, 0.5 GPF	0	2	0	4	0	0	0	0
WASHFOUNTAIN, 1-1/2"	0	2	0	1.5	0	1.5	0	0
WATER CLOSET, 1.28 TANK	0	4	0	2.5	0	0	0	0
WATER CLOSET, 1.28 FV	0	4	0	5	0	0	0	0
ICE MAKER	0	0	0	1	0	0	0	0
PRODUCE MISTER	0	0	0	2.5	0	0	0	0
FLORAL / BREAK SINK	0	2	0	1.5	0	1.5	0	0
TOTAL FU			8.0		6.3		3.8	7.5
EQUIVALENT COLD WATER FLOW RATE (GPM):						7		
ADDITIONAL DEMAND LOAD (GPM)						0		
PRESSURE AVAILABLE AT MAIN (PSI):						50		
PRESSURE BOOSTER PUMP						0		
MINIMUM REQUIRED FIXTURE PRESSURE (PSI):						20		
ELEVATION RISE (FT):						10		
METER LOSS (PSI):						5		
BACKFLOW PREVENTER LOSS (PSI):						10	0	
ADDITIONAL LOSSES (PSI):						0		
EQUIVALENT PIPE LENGTH FROM METER TO MOST REMOTE FIXTURE (FT):						350		
FRICTION LOSS PRESSURE AVAILABLE (PSI):						10.66		
MAXIMUM ALLOWABLE FRICTION LOSS (PSI/100 FT):						3.05		
WATER FLOW VELOCITY (FPS):						2.53		
CALCULATED FRICTION HEAD LOSS (PSI/100 FT):						1.57		
MINIMUM REQUIRED 'WATER' PIPE SIZE (INCHES):						1.0		
MINIMUM REQUIRED 'WASTE' PIPE SIZE (INCHES):						2.5		
(CALCULATIONS PER THE UPC/CPC)								

LPAS

2484 Natomas Park Drive Suite 100 Sacramento CA 95833
916 443 0335 lpasdesign.com Architecture + Design

ORGANIC FARM CLASSROOMS INCREMENT 1

INDIAN VALLEY CAMPUS
COLLEGE OF MARIN

NOVATO, CA

FILE NUMBER: 21-C1

IDENTIFICATION STAMP
DIVISION OF THE STATE ARCHITECT
01 - 116913 INCR: 1
AC RE FLS ED SSR CD
DATE 01/12/2018

ARCHITECT'S STAMP APPROVAL

THIS DOCUMENT CONTAINS INFORMATION THAT IS PROPRIETARY TO LPAS, INC. AND IS FURNISHED FOR THE PURPOSES OF REVIEW, BIDDING OR CONSTRUCTION OF THE PROJECT LISTED IN THE JOB TITLE BOX ABOVE AND SHALL NOT BE USED FOR ANY OTHER PURPOSE OR RELEASED TO ANY OTHER PARTY WITHOUT THE WRITTEN CONSENT OF LPAS, INC. INFORMATION CONTAINED HEREIN IS AN INSTRUMENT OF PROFESSIONAL SERVICES AND SHALL REMAIN THE PROPERTY OF LPAS, INC. ALL RIGHTS RESERVED COPYRIGHT © 2009.

THIS DRAWING IS NOT FINAL OR TO BE USED FOR CONSTRUCTION UNTIL IT IS SIGNED BY THE ARCHITECT AND ENGINEER.

CONSULTANT

TURLEY & ASSOCIATES | MECHANICAL ENGINEERING GROUP, INC
2437 Capitol Avenue
Sacramento, CA 95816
(916) 325-1000
FAX: (916) 325-1070
Email: office@turleymech.com

Project Engineer:	BP	Job Number:	17166
Project Manager:	BP	Plot Date: Nov 08, 2017 - 1:02pm	
Project Drafter:	OC	Login: JTrusler	

REGISTERED PROFESSIONAL ENGINEER
No. M030446
Exp. 12/31/17
MECHANICAL
STATE OF CALIFORNIA

MECHANICAL & PLUMBING LEGEND, SCHEDULES & NOTES

PROJECT NO: 1102-0005

DATE: 11-17-2017

SHEET NO:

MP0.21

CONSTRUCTION SET

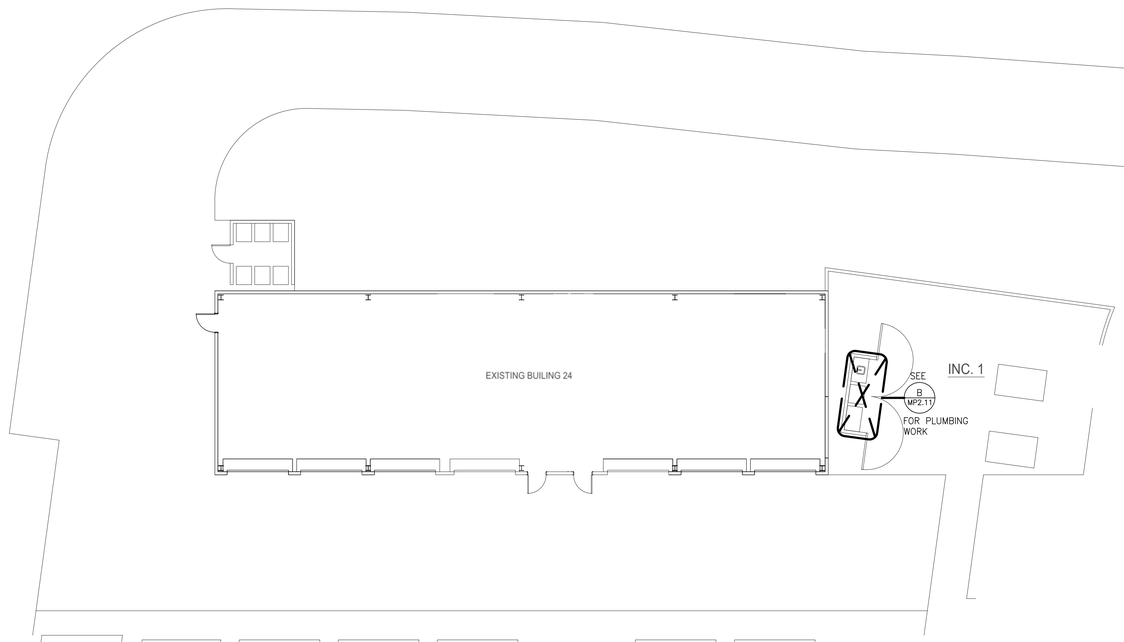

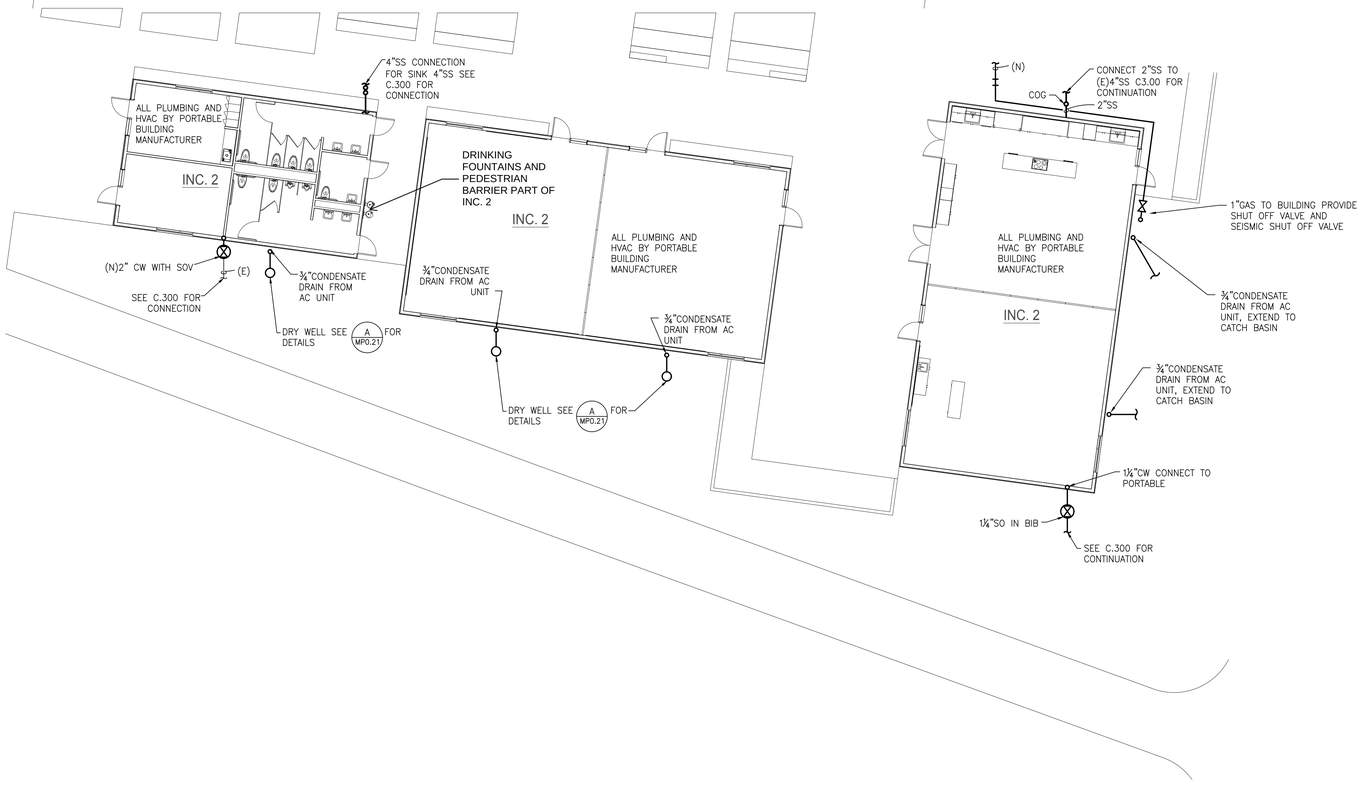

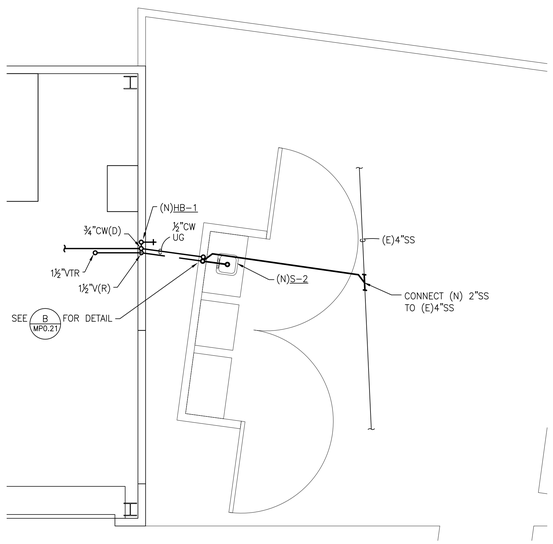

B ENLARGED PANRY PLUMBING PLAN
SCALE 1/4" = 1'-0"

A SITE PLAN
SCALE 1"=10'-0"

LPAS
2484 Natomas Park Drive Suite 100 Sacramento CA 95833
916 443 0335 lpasdesign.com Architecture + Design

ORGANIC FARM CLASSROOMS INCREMENT 1

INDIAN VALLEY CAMPUS
COLLEGE OF MARIN

NOVATO, CA

FILE NUMBER: 21-C1

IDENTIFICATION STAMP
DIVISION OF THE STATE ARCHITECT
01 - 116913 INCR: 1
AC RE FLS ED SSR CD
DATE 01/12/2018

ARCHITECT'S STAMP APPROVAL

THIS DOCUMENT CONTAINS INFORMATION THAT IS PROPRIETARY TO LPAS, INC. AND IS FURNISHED FOR THE PURPOSES OF REVIEW, BIDDING OR CONSTRUCTION OF THE PROJECT LISTED IN THE JOB TITLE BOX ABOVE AND SHALL NOT BE USED FOR ANY OTHER PURPOSE OR RELEASED TO ANY OTHER PARTY WITHOUT THE WRITTEN CONSENT OF LPAS, INC. INFORMATION CONTAINED HEREIN IS AN INSTRUMENT OF PROFESSIONAL SERVICES AND SHALL REMAIN THE PROPERTY OF LPAS, INC. ALL RIGHTS RESERVED COPYRIGHT © 2009.

THIS DRAWING IS NOT FINAL OR TO BE USED FOR CONSTRUCTION UNTIL IT IS SIGNED BY THE ARCHITECT AND ENGINEER.

CONSULTANT

TURLEY & ASSOCIATES
MECHANICAL ENGINEERING GROUP INC.
2431 Capital Avenue
Sacramento, CA 95816
(916) 325-1065
FAX (916) 325-1070
Email: office@turleymech.com

Project Engineer:	BP	Job Number:	17185
Project Manager:	BP	Plot Date: Nov 08, 2017 - 5:02pm	
Project Drafter:	CC	Login: JTrotter	

MECHANICAL No. M030446 Exp. 12/31/17 PROFESSIONAL ENGINEER STATE OF CALIFORNIA

SITE PLAN & ENLARGED PANTRY PLUMBING PLAN

PROJECT NO: 1102-0005
DATE: 11-17-2017

SHEET NO:

MP2.11

CONSTRUCTION SET

NOTES

1. NUMERICAL PLANT QUANTITIES ARE FOR INFORMATION ONLY. IN CASE OF DISCREPANCY, VERIFY FROM PLAN.

2. CONTRACTOR SHALL VERIFY LOCATION OF ALL EXISTING UNDERGROUND UTILITIES AND STRUCTURES PRIOR TO ANY EXCAVATION. CONTACT COMMON GROUND ALLIANCE (C.G.A.) @ 811, CALL AT LEAST 48 HOURS PRIOR TO PERFORMING EXCAVATION. CONTRACTOR SHALL REPAIR ANY DAMAGE TO UTILITIES CAUSED BY HIS WORK AT NO ADDITIONAL COST TO THE OWNER.

3. SLOPE ALL PLANTING AREAS A MINIMUM OF 2% TO PROVIDE POSITIVE DRAINAGE.

4. IMPORTED TOPSOIL SHALL BE TESTED BY AN APPROVED SOIL TESTING SERVICE, AND TOPSOIL SHALL BE AMENDED PER THE RECOMMENDATIONS CONTAINED IN THAT SOILS REPORT. REFER TO SPECIFICATIONS FOR MORE INFORMATION ON SOILS TEST AND AMENDMENTS.

5. TOP DRESS ALL SHRUB AND GROUNDCOVER AREAS, (NOT LAWN) WITH A 3" LAYER OF 2" SHREDDED FIR BARK MULCH PER SPECIFICATIONS. SUBMIT SAMPLE TO LANDSCAPE ARCHITECT FOR APPROVAL PRIOR TO INSTALLATION.

6. TREE LOCATIONS MAY BE ADJUSTED IN THE FIELD BY THE LANDSCAPE ARCHITECT TO SUIT SITE REQUIREMENTS.

7. SOIL CONDITIONS CAUSING THE RETENTION OF WATER IN PLANTING PITS FOR MORE THAN 2 HOURS SHALL BE CORRECTED PRIOR TO PLANTING TO PROVIDE POSITIVE DRAINAGE, AT NO ADDITIONAL COST TO THE OWNER.

8. ALL PLANT MATERIALS SHALL COMPLY WITH SPECIFICATIONS OF ANSI Z60.1 "STANDARD FOR NURSERY STOCK"

9. CONTRACTOR SHALL SECURE PLANT MATERIALS AS SPECIFIED IMMEDIATELY UPON BID AWARD. IF PLANT MATERIALS ARE NOT AVAILABLE, CONTACT LANDSCAPE ARCHITECT FOR APPROVAL OF SUBSTITUTIONS. NO SUBSTITUTIONS FOR PLANT MATERIAL WILL BE ALLOWED WITHOUT PRIOR WRITTEN APPROVAL OF THE LANDSCAPE ARCHITECT.

10. LIME TREATED SOIL SHALL BE REMOVED FROM LANDSCAPE PLANTERS AND PROPERLY DISPOSED OFF-SITE. LIME TREATED SOIL SHALL BE EXCAVATED TO A DEPTH OF 24" OR TO THE DEPTH REQUIRED TO REMOVE LIME TREATED SOIL.

11. PLANTERS SHALL BE BACKFILLED WITH APPROVED TOPSOIL. REFER TO SPECIFICATION FOR AMENDING OF TOPSOIL.

12. REFER TO PLANTING DETAILS AND SPECIFICATIONS FOR MORE INFORMATION.

17. REPLACE ALL (E) SHRUBS AND TURF DAMAGED AS PART OF DEMOLITION OR CONSTRUCTION. CONSULT WITH DISTRICT LANDSCAPE REPRESENTATIVE FOR REPLACEMENT SHRUB SIZE AND SPECIES, AND TURF SPECIES.

18. REPLACE ALL (E) TREES DAMAGED AS PART OF DEMOLITION OR CONSTRUCTION. CONSULT WITH DISTRICT ARBORIST FOR TREE BOX SIZE. THE DISTRICT HAS FINAL SAY ON REPLACEMENT SIZE

I HAVE COMPLIED WITH THE CRITERIA OF THE WATER EFFICIENT LANDSCAPE ORDINANCE AND APPLIED SUCH CRITERIA FOR THE EFFICIENT USE OF WATER IN THE LANDSCAPE DESIGN PLAN."

LANDSCAPE NOTES D10

PLANT SCHEDULE

TREES	BOTANICAL NAME	CONT	WATER USE	DETAIL
•	Quercus x warei `Nadler` Kindred Spirit Oak	24"box	Med	B1 L1.11 / B5 L1.11 / D1 L1.11

SHRUBS	BOTANICAL NAME	CONT	WATER USE	DETAIL
A	Achillea millefolium `Fire King` Fire King Yarrow	5 gal	Low	F1 L1.11
X	Allium schoenoprasum Common Chives	1 gal	Low	F1 L1.11
⊕	Artemisia dracunculus `Sativa` French Tarragon	1 gal	Med	F1 L1.11
⊘	Bouteloua gracilis `Blonde Ambition` Blue Grama	1 gal	Low	F1 L1.11
⬡	Cistus salvifolius Rockrose Sageleaf	5 gal	Low	F1 L1.11
✳	Galvezia speciosa Island Bush Snapdragon	1 gal	Low	F1 L1.11
△	Gaura lindheimeri `Whirling Butterflies` Whirling Butterflies Gaura	5 gal	Med	F1 L1.11
L	Lavandula angustifolia `Hidcote Blue` Hidcote Blue Lavender	5 gal	Low	F1 L1.11
⊛	Lomandra longifolia `Sea Breeze` Sea Mat Grass	1 gal	Low	F1 L1.11
≋	Ocimum basilicum Sweet Basil	1 gal	Med	F1 L1.11
V	Origanum vulgare hirtum Greek Oregano	5 gal	Med	F1 L1.11
⊗	Penstemon heterophyllus `Margarita BOP` Beard Tongue	5 gal	Low	F1 L1.11
C	Rhamnus californica California Coffee Berry	5 gal	Low	F1 L1.11
◎	Salvia officinalis Garden Sage	5 gal	Low	F1 L1.11
~	Thymus vulgaris Common Thyme	1 gal	Low	F1 L1.11

GROUND COVERS	BOTANICAL NAME	CONT	WATER USE
	Hydroseed Native Grass and Wildflowers	---	Low
	Native Preservation Mix	sod	Low
	Turf Sod Bolero Plus Fescue Blend	sod	High

PLANT SCHEDULE K10

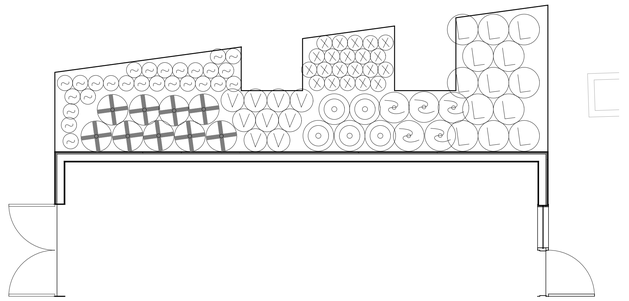

0 4 8 12
SCALE: 1/4" = 1'-0" FT

ORGANIC FARM_CLASSROOM HERB GARDEN D1
1"=20'-0"

(E) BALL FIELDS

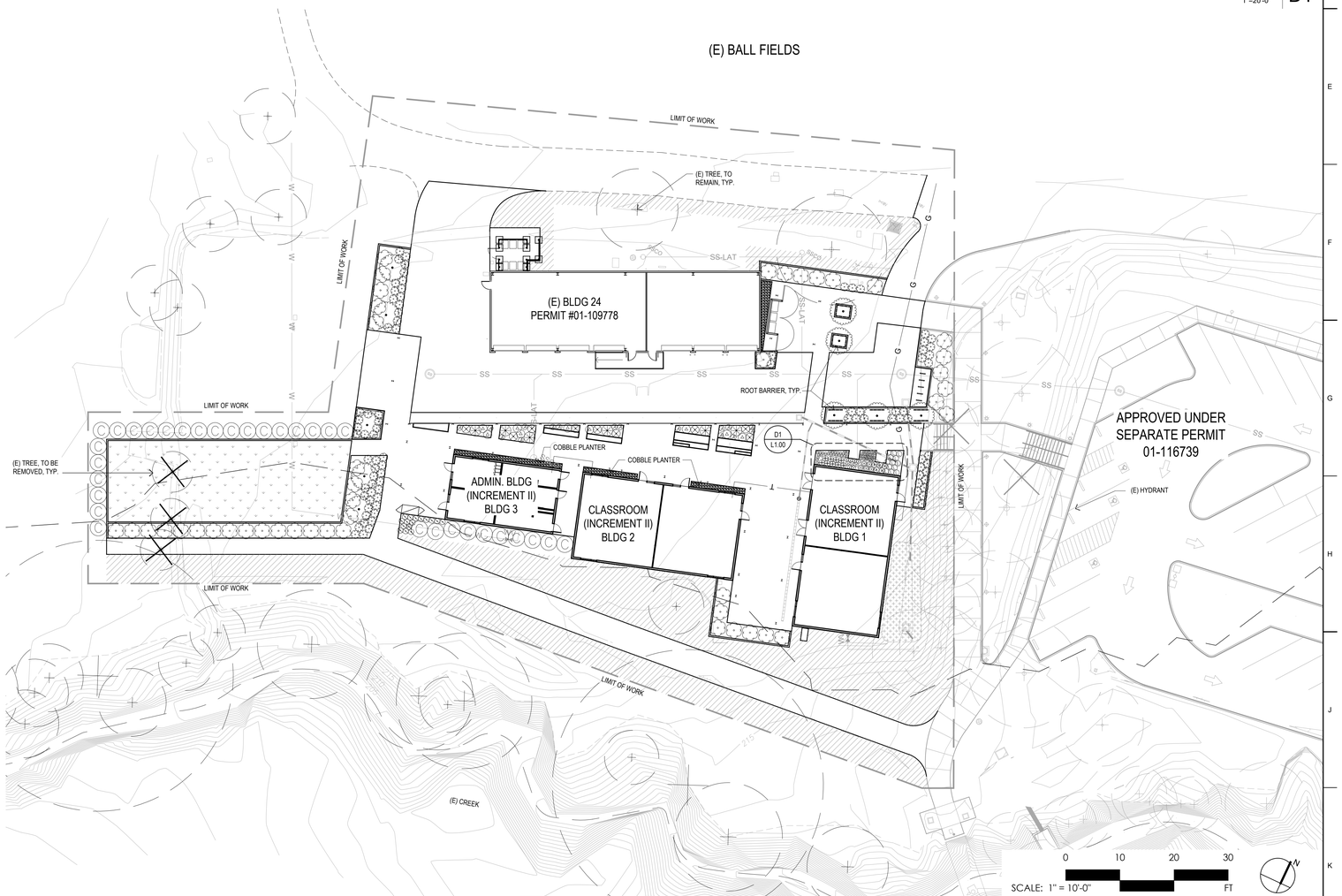

ORGANIC FARM_CLASSROOM LANDSCAPE PLAN K1
1"=20'-0"

LPAS
2484 Natomas Park Drive Suite 100 Sacramento CA 95833
916 443 0335 lpasdesign.com Architecture + Design

ORGANIC FARM CLASSROOMS INCREMENT 1

INDIAN VALLEY CAMPUS
COLLEGE OF MARIN

NOVATO, CA

FILE NUMBER: 21-C1
IDENTIFICATION STAMP
DIVISION OF THE STATE ARCHITECT
01 - 116913 INCR: 1
AC RE FLS ED SSR CD
DATE 01/12/2018

LICENSED LANDSCAPE ARCHITECT
RICHARD CHRISTIAN CRAWFORD
Signature
6-30-2018
Renewal Date
STATE OF CALIFORNIA

ARCHITECT'S STAMP APPROVAL

THIS DOCUMENT CONTAINS INFORMATION THAT IS PROPRIETARY TO LPAS, INC. AND IS FURNISHED FOR THE PURPOSES OF REVIEW, BIDDING OR CONSTRUCTION OF THE PROJECT LISTED IN THE JOB TITLE BOX ABOVE AND SHALL NOT BE USED FOR ANY OTHER PURPOSE OR RELEASED TO ANY OTHER PARTY WITHOUT THE WRITTEN CONSENT OF LPAS, INC. INFORMATION CONTAINED HEREIN IS AN INSTRUMENT OF PROFESSIONAL SERVICES AND SHALL REMAIN THE PROPERTY OF LPAS, INC. ALL RIGHTS RESERVED COPYRIGHT © 2009.

THIS DRAWING IS NOT FINAL OR TO BE USED FOR CONSTRUCTION UNTIL IT IS SIGNED BY THE ARCHITECT AND ENGINEER.

CONSULTANT

LANDSCAPE PLAN

PROJECT NO: 1102-0005
DATE: 11-17-2017

SHEET NO:

L1.00

CONSTRUCTION SET

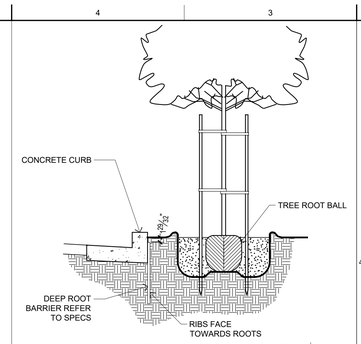

TREE PLANTING WITH ROOT BARRIOR B5
TREE PLANING- ROOT BARRIOR

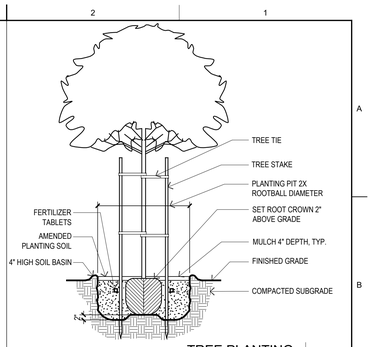

TREE PLANTING B1
1/2" = 1'-0"

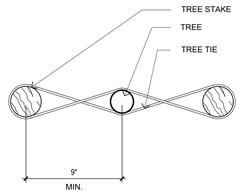

TREE STAKING - SECTION D1
3" = 1'-0"

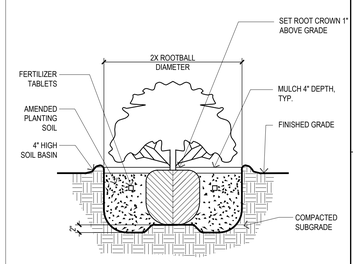

SHRUB PLANTING F1
1/2" = 1'-0"

LPAS

2484 Natomas Park Drive Suite 100 Sacramento CA 95833
916 443 0335 lpasdesign.com Architecture + Design

ORGANIC FARM CLASSROOMS INCREMENT 1

INDIAN VALLEY CAMPUS
COLLEGE OF MARIN

NOVATO, CA

FILE NUMBER: 21-C1
IDENTIFICATION STAMP
DIVISION OF THE STATE ARCHITECT
01 - 116913 INCR: 1
AC RE FLS ED SSR CD
DATE 01/12/2018

ARCHITECT'S STAMP APPROVAL

THIS DOCUMENT CONTAINS INFORMATION THAT IS PROPRIETARY TO LPAS, INC. AND IS FURNISHED FOR THE PURPOSES OF REVIEW, BIDDING OR CONSTRUCTION OF THE PROJECT LISTED IN THE JOB TITLE BOX ABOVE AND SHALL NOT BE USED FOR ANY OTHER PURPOSE OR RELEASED TO ANY OTHER PARTY WITHOUT THE WRITTEN CONSENT OF LPAS, INC. INFORMATION CONTAINED HEREIN IS AN INSTRUMENT OF PROFESSIONAL SERVICES AND SHALL REMAIN THE PROPERTY OF LPAS, INC. ALL RIGHTS RESERVED COPYRIGHT © 2009.

THIS DRAWING IS NOT FINAL OR TO BE USED FOR CONSTRUCTION UNTIL IT IS SIGNED BY THE ARCHITECT AND ENGINEER.

CONSULTANT

LANDSCAPE DETAILS

PROJECT NO: 1102-0005
DATE: 11-17-2017

SHEET NO:

L1.11

CONSTRUCTION SET

FLOW AVAILABLE

Point of Connection Size:	2"
Flow Available:	78.62 gpm

DESIGN ANALYSIS

Maximum Station Flow:	15.28 gpm
Flow Available at POC:	78.62 gpm
Residual Flow Available:	63.34 gpm

PRESSURE AVAILABLE

Static Pressure at POC:	44.00 psi
Friction Loss:	3.66 psi
Loss through Valve:	13.72 psi
Residual Pressure Available:	26.62 psi

IRRIGATION CALCULATIONS B5

SYMBOL	MANUFACTURER/MODEL	PSI	GPM	DETAIL
	Rain Bird RWS-B-C-P	40	0.50	B7 L2.11
360 ARC	Rain Bird 5006-PL-PC,FC-MPR Turf Rotor, 6.0" Pop-Up, with Flow Shut-Off Device. Matched Precipitation Rotor (MPR Nozzle), Arc and Radius as per Symbol.		35	F7 L2.11
	Hunter ICZ-101-40 1" Drip Control Zone Kit. 1" ICV Globe Valve with 1" HY100 filter system. Pressure Regulation: 40psi. Flow Range: 2 to 20 GPM.			H5 L2.11
	Rain Bird 33-DNP 3/4" 3/4" Brass Quick-Coupling Valve,Locking Thermoplastic Non-Potable Purple Rubber Cover, and 2-Piece Body.			D5 L2.11
	Area to Receive Dripline: Hunter PLD-ESD 17 0.6GPH fleece wrapped inline emitter tubing, without the blanket Eco-Mat. Emitters at 12" O.C. Dripline laterals spaced at 12" apart, with emitters offset for triangular pattern. Specify PLD-LOC fitting.			B9 L2.11 D9 L2.11 F9 L2.11 H9 L2.11
	Area to Receive Dripline: Rain Bird XFS-P-06-18 (18) XFS Pressure Compensating Dripline w/Copper Shield Technology. 0.6GPH emitters at 18.0" O.C. Laterals spaced at 18.0" apart. Purple Tubing for Non-Potable Water.			B9 L2.11 D9 L2.11 F9 L2.11 H9 L2.11

SYMBOL	MANUFACTURER/MODEL/DESCRIPTION	DETAIL
	Hunter ICV-G-FS-R 1" 1" Plastic Electric Remote Control Valves, with NPT Threaded Inlet/Outlet. Reclaimed Water ID, Purple Handle.	H5 L2.11
	Rain Bird 33-DNP 3/4" 3/4" Brass Quick-Coupling Valve, Locking Thermoplastic Non-Potable Purple Rubber Cover, and 2-Piece Body.	D5 L2.11
	Isolation Vlave Bronze Threaded Gate Valve with Cross Handle. Same size as mainline.	H3 L2.11
C	Irrigation Controller Connect to irrigation controller below at parking lot.	
POC #1"	Point of Connection 2" Stub from Parking Lot Below	
	Irrigation Lateral Line: PVC Schedule 40, Purple Pipe. PVC Schedule 40 pipe. Only lateral transition pipe sizes 1" and above are indicated, with all others being 3/4" in size.	B3 L2.11 D3 L2.11
	Irrigation Mainline: PVC Schedule 40, Purple Pipe. 2"	B3 L2.11 D3 L2.11
E	Electrical Conduit: PVC Schedule 40. 1 1/2" Conduit between controller, flow sensor, and remote control valve.	B3 L2.11 D3 L2.11
	Pipe Sleeve Pipe sleeve size shall allow for irrigation piping and their related couplings to easily slide through sleeving material. Extend sleeves 18 inches beyond edges of paving or construction.	B3 L2.11 D3 L2.11

Valve Callout
#' Valve Number
#" Valve Flow
#" Valve Size

IRRIGATION SCHEDULE D1

IRRIGATION NOTES

REPLACE AND REPAIR
1. ALL (E) IRRIGATION EFFECTED BY DEMOLITION OR CONSTRUCTION TO BE REPLACED, REPAIRED, AND RECONNECTED TO MAINLINE AND IRRIGATION CONTROLLER. ALL REPAIRED IRRIGATION AREAS MUST MAINTAIN HEAD TO HEAD COVERAGE

GENERAL
1. ALL LOCAL MUNICIPAL AND STATE LAWS, RULES AND REGULATIONS GOVERNING OR RELATING TO ANY PORTION OF THIS WORK ARE HEREBY INCORPORATED INTO AND MADE A PART OF THESE SPECIFICATIONS AND THEIR PROVISIONS SHALL BE CARRIED OUT BY THE CONTRACTOR.
2. THE CONTRACTOR SHALL VERIFY THE LOCATIONS OF ALL EXISTING UTILITIES, STRUCTURES AND SERVICES BEFORE COMMENCING WORK. THE LOCATIONS OF UTILITIES, STRUCTURES AND SERVICES SHOWN IN THESE PLANS ARE APPROXIMATE ONLY. ANY DISCREPANCIES BETWEEN THESE PLANS AND ACTUAL FIELD CONDITIONS SHALL BE REPORTED TO THE OWNER'S REPRESENTATIVE.
3. THE CONTRACTOR SHALL OBTAIN THE PERTINENT ENGINEERING OR ARCHITECTURAL PLANS BEFORE BEGINNING WORK.
4. THE CONTRACTOR SHALL OBTAIN ALL NECESSARY PERMITS REQUIRED TO PERFORM THE WORK INDICATED HEREIN BEFORE BEGINNING WORK.
5. THIS DESIGN IS DIAGRAMMATIC. ALL IRRIGATION EQUIPMENT SHOWN IN PAVED AREAS IS FOR DESIGN CLARITY ONLY AND IS TO BE INSTALLED WITHIN PLANTING AREAS.
6. THE CONTRACTOR SHALL NOT WILLFULLY INSTALL ANY EQUIPMENT AS SHOWN ON THE PLANS WHEN IT IS OBVIOUS IN THE FIELD THAT UNKNOWN CONDITIONS EXIST THAT WERE NOT EVIDENT AT THE TIME THESE PLANS WERE PREPARED. ANY SUCH CONDITIONS SHALL BE BROUGHT TO THE ATTENTION OF THE OWNER'S REPRESENTATIVE PRIOR TO ANY WORK OR THE IRRIGATION CONTRACTOR SHALL ASSUME ALL RESPONSIBILITY FOR ANY FIELD CHANGES DEEMED NECESSARY BY THE OWNER.
7. INSTALL ALL EQUIPMENT AS SHOWN IN THE DETAILS AND PER SPECIFICATIONS.
8. ALL CONTROLLER WIRE SHALL BE INSTALLED IN SCH. 40 CONDUIT, MINIMUM SIZE SHALL BE 11/2".
9. THE CONTRACTOR SHALL PROVIDE ADEQUATE IRRIGATION TO ALL PLANTERS. IRRIGATION COVERAGE OF PLANTER MAY REQUIRE ADDITIONAL IRRIGATION EQUIPMENT TO PROVIDE REQUIRED COVERAGE TO SUSTAIN HEALTH PLANT GROWTH.

PIPE
1. MAINLINE SHOWN WITHIN PAVING FOR CLARITY ONLY. ACTUAL MAINLINE LOCATION TO BE A MINIMUM OF 18" OFF ADJACENT HARDSCAPE, FENCE, PROPERTY LINES AND OTHER OBSTACLES TYP.
2. NO IRRIGATION MAINLINES SHALL BE INSTALLED WITHIN THE PUBLIC RIGHT OF WAY.
3. LATERAL LINES ARE SHOWN WITHIN PAVING FOR CLARITY ONLY, ACTUAL LOCATION TO BE WITHIN PLANTER. CONFIRM LAYOUT IN FIELD WITH OWNER'S AUTHORIZED REPRESENTATIVE PRIOR TO COMMENCING WORK.
4. ALL MAINLINE PIPE UNDER PAVED AREAS TO BE INSTALLED IN SLEEVE TWICE THE DIAMETER OF THE PIPE CARRIED; LATERAL LINE SHALL BE INSTALLED IN SLEEVE TWICE THE DIAMETER OF THE PIPE CARRIED. SLEEVES TO EXTEND AT LEAST 18" PAST THE EDGE OF THE PAVING. SLEEVE ENDS SHALL BE FILLED WITH EXPANDING FOAM TO KEEP OUT DIRT AFTER PIPE IS INSTALLED.
5. ALL PIPE SIZES SHALL CONFORM TO THOSE SHOWN ON THE DRAWINGS. LATERAL PIPE NOT SIZED ON DRAWING AND THAT ARE DOWNSTREAM OF 1" PIPE SHALL BE MINIMUM OF 3/4" PIPE SIZE. THE ONLY ALLOWED PIPE SIZE SUBSTITUTIONS WILL BE FOR LARGER SIZED PIPE.
6. CONTRACTOR TO FLUSH MAINLINE AND LATERAL IRRIGATION CLEAR OF ALL DEBRIS BEFORE LINES ARE PRESURIZED.

VALVES
1. ALL QUICK COUPLER AND REMOTE CONTROL VALVES TO BE INSTALLED IN SHRUB OR GROUND COVER AREAS WHERE POSSIBLE.
2. ALL QUICK COUPLER AND REMOTE CONTROL VALVES TO BE INSTALLED AS SHOWN ON THE INSTALLATION DETAILS. INSTALL ALL QUICK COUPLER AND REMOTE CONTROL VALVES WITHIN 18" OF HARDSCAPE.
3. REMOTE CONTROL VALVES AND ISOLATION VALVE LOCATIONS ON THIS DRAWING ARE APPROXIMATE. THE LANDSCAPE CONTRACTOR SHALL STAKE OUT EACH REMOTE CONTROL VALVE AND ISOLATION VALVE LOCATION FOR REVIEW AND APPROVAL BY OWNER REPRESENTATIVE PRIOR TO INSTALLATION OF ALL VALVES. MINOR MODIFICATIONS OF REMOTE CONTROL VALVES AND ISOLATION VALVE LOCATIONS AS REQUESTED BY THE OWNER'S REPRESENTATIVE SHALL BE PROVIDED BY THE CONTRACTOR AT NO ADDITIONAL COST TO THE OWNER.

POP-UP SPRAY
1. ALL HEADS ARE TO BE INSTALLED WITH THE NOZZLE, SCREEN AND ARCS SHOWN ON THE PLANS. ALL HEADS ARE TO BE ADJUSTED TO PREVENT OVER SPRAY ONTO BUILDINGS, WALLS, FENCES AND PAVED SURFACES. THIS INCLUDES, BUT NOT LIMITED TO, ADJUSTMENT OF DIFFUSER PIN OR ADJUSTMENT SCREW, REPLACEMENT OF NOZZLES WITH MORE APPROPRIATE RADIUS UNITS AND THE ADJUSTMENT OF ADJUSTABLE ARC NOZZLES.
2. SPACING OF POP-UP SPRAY HEADS SHALL ALLOW HEAD TO HEAD COVERAGE.
3. CONTRACTOR SHALL ADJUST ALL HEADS AS REQUIRED TO ACCOMMODATE ANY VERTICAL OBSTRUCTIONS THAT MAY OCCUR, INCLUDING BUT NOT LIMITED TO LIGHT POLES, FIRE HYDRANTS, ETC. VERIFY ALL HEAD LAYOUT WITH OWNER'S AUTHORIZED REPRESENTATIVE PRIOR TO COMMENCING WORK.

CONTROLLER
1. CONTRACTOR TO INSTALL RELOCATED CONTROLLER IN STEEL CABINET ENCLOSURE PER MANUFACTURER AND DISTRICTS RECOMMENDATIONS.
2. CONTRACTOR TO COORDINATE 110 V ELECTRICAL SUPPLY POWER FOR CONTROLLER.
3. CONTROLLER TO BE GROUNDED PER MANUFACTURER AND INDUSTRY STANDARDS.

I HAVE COMPLIED WITH THE CRITERIA OF THE WATER EFFICIENT LANDSCAPE ORDINANCE AND APPLIED SUCH CRITERIA FOR THE EFFICIENT USE OF WATER IN THE GRADING AND DRAINAGE PLAN.

IRRIGATION NOTES K10

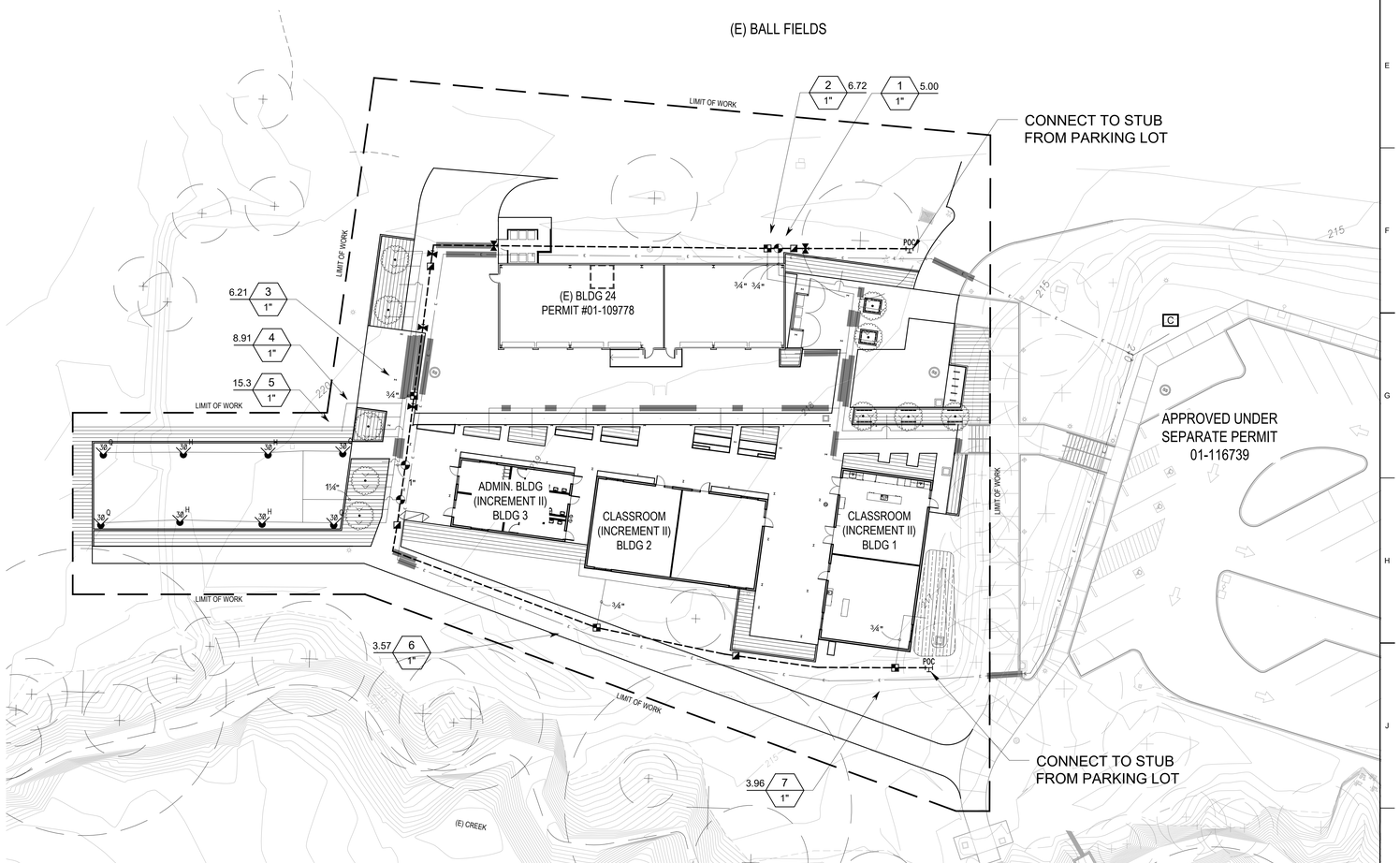

ORGANIC FARM_CLASSROOM SITE PLAN 1"=20'-0" K1

LPAS
2484 Natomas Park Drive Suite 100 Sacramento CA 95833
916 443 0335 lpasdesign.com Architecture + Design

ORGANIC FARM CLASSROOMS INCREMENT 1

INDIAN VALLEY CAMPUS
COLLEGE OF MARIN

NOVATO, CA

FILE NUMBER: 21-C1

IDENTIFICATION STAMP
DIVISION OF THE STATE ARCHITECT
01 - 116913 INCR: 1
AC RE FLS ED SSR CD
DATE 01/12/2018

LICENSED LANDSCAPE ARCHITECT MICHAEL ORELLO License No. 5130 Signature 6/30/2018 Renewal Date STATE OF CALIFORNIA

ARCHITECT'S STAMP APPROVAL

THIS DOCUMENT CONTAINS INFORMATION THAT IS PROPRIETARY TO LPAS, INC. AND IS FURNISHED FOR THE PURPOSES OF REVIEW, BIDDING OR CONSTRUCTION OF THE PROJECT LISTED IN THE JOB TITLE BOX ABOVE AND SHALL NOT BE USED FOR ANY OTHER PURPOSE OR RELEASED TO ANY OTHER PARTY WITHOUT THE WRITTEN CONSENT OF LPAS, INC. INFORMATION CONTAINED HEREIN IS AN INSTRUMENT OF PROFESSIONAL SERVICES AND SHALL REMAIN THE PROPERTY OF LPAS, INC. ALL RIGHTS RESERVED COPYRIGHT © 2009.

THIS DRAWING IS NOT FINAL OR TO BE USED FOR CONSTRUCTION UNTIL IT IS SIGNED BY THE ARCHITECT AND ENGINEER.

CONSULTANT

IRRIGATION PLAN

PROJECT NO: 1102-0005
DATE: 11-17-2017

SHEET NO:

L2.00

CONSTRUCTION SET

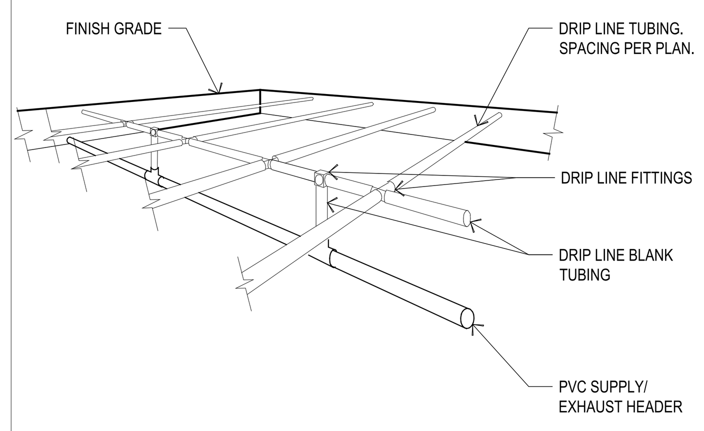

DRIP LINE HEADER — B9
L2.10 N.T.S.

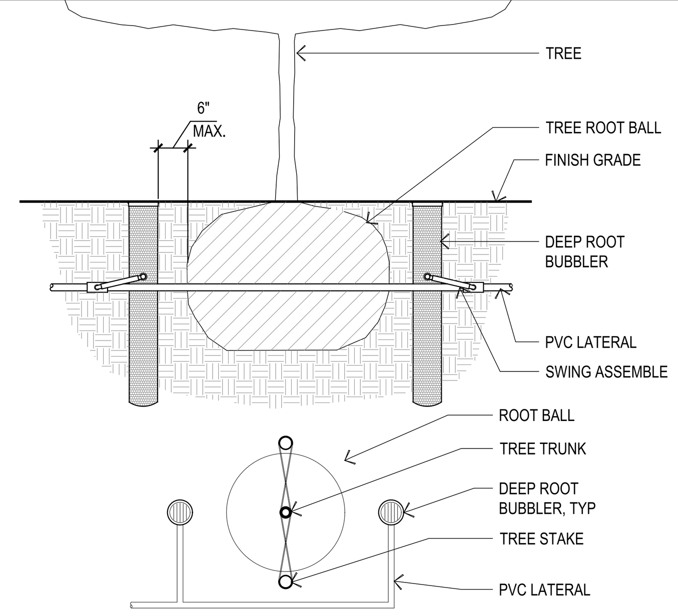

DEEP ROOT TREE BUBBLER — B7
L2.10 N.T.S.

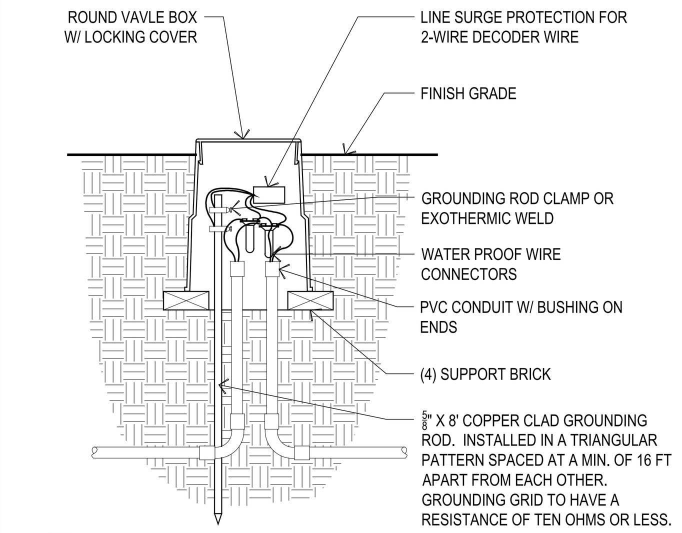

NOTE:
LOCATE GROUNDING ROD AT EVERY 500' OF WIRE

2 WIRE DECODER WIRE SURGE PROTECTION — B5
L2.10 NTS

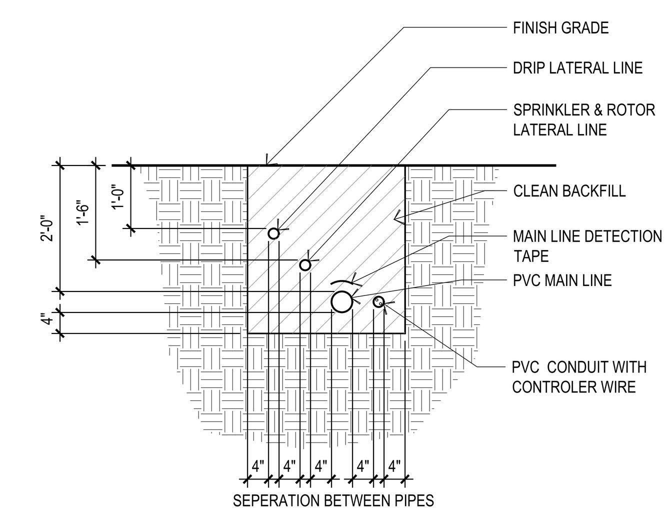

TRENCHING — B3
L2.10 N.T.S.

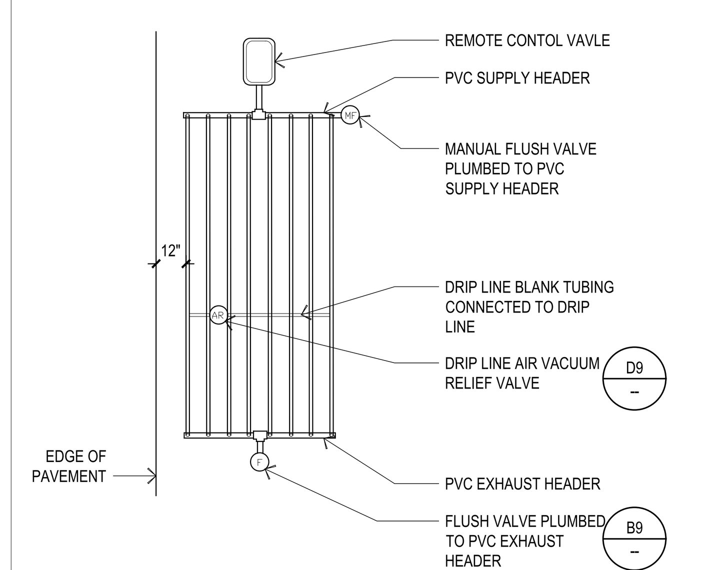

DRIP LINE END FEED — D9
L2.10 N.T.S.

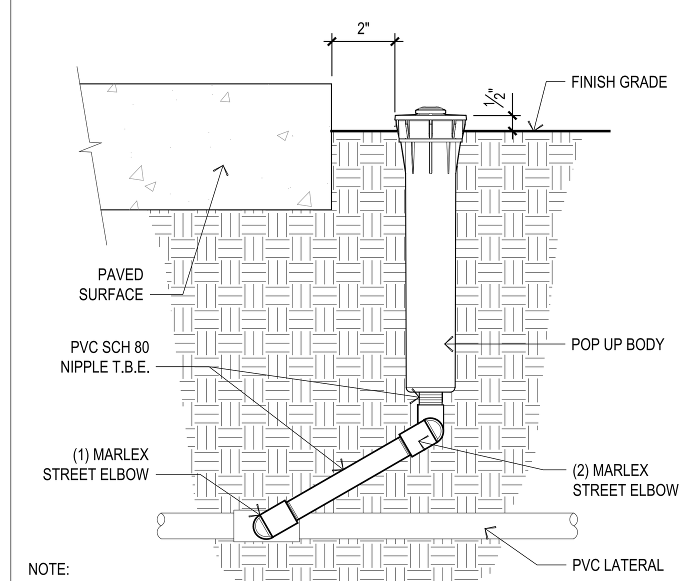

NOTE:
USE TEFLON TAPE ON ALL MALE THREADS (EXCEPT MARLEX FITTINGS)

6" POP UP SPRAY — D7
L2.10 N.T.S.

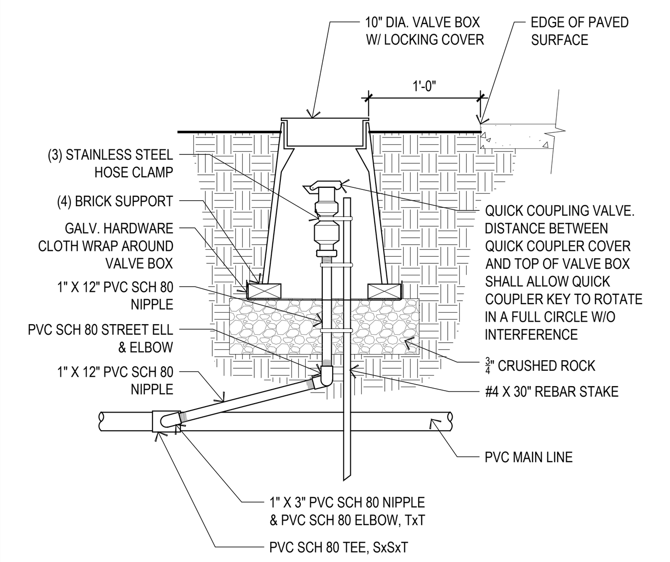

QUICK COUPLING VALVE — D5
L2.10 N.T.S.

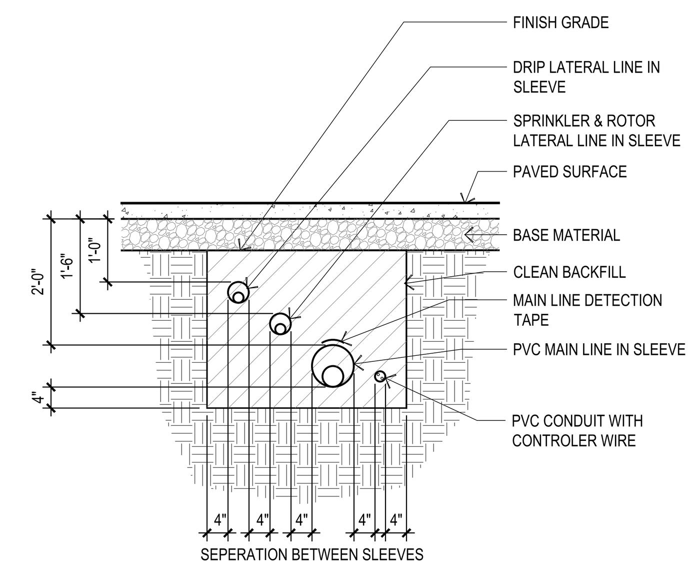

TRENCHING UNDER PAVING — D3
L2.10 N.T.S.

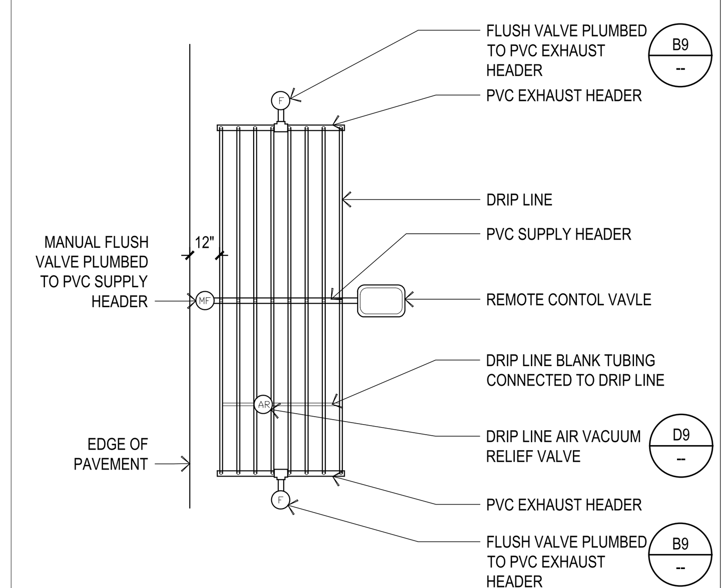

DRIP LINE CENTER FEED — F9
L2.10 N.T.S.

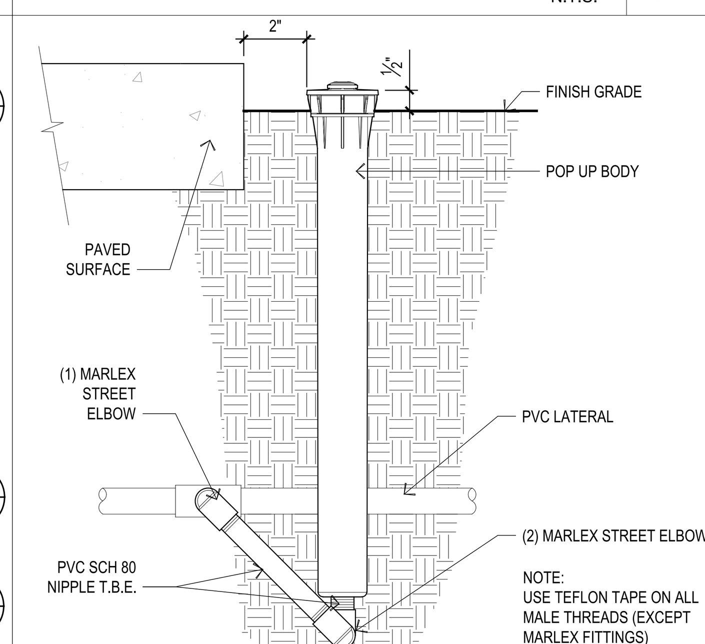

NOTE:
USE TEFLON TAPE ON ALL MALE THREADS (EXCEPT MARLEX FITTINGS)

12" POP UP SPRAY — F7
L2.10 N.T.S.

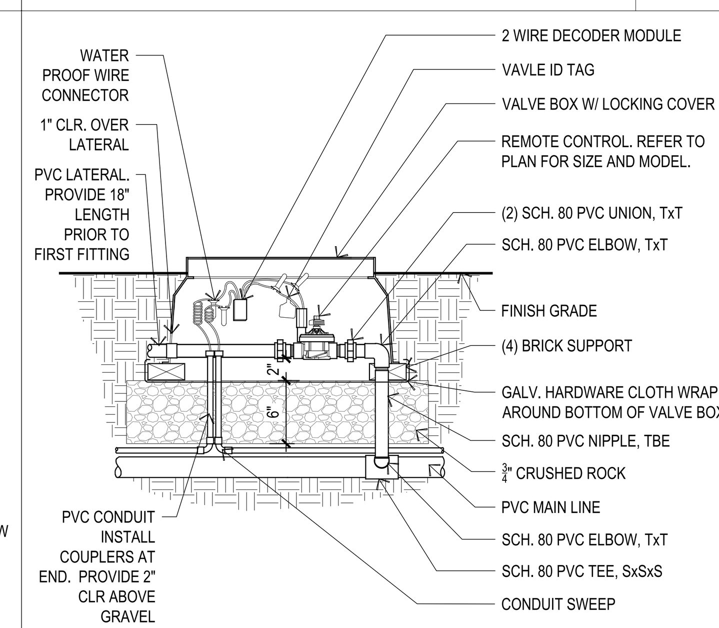

REMOTE CONTROL VALVE — F5
L2.10 N.T.S.

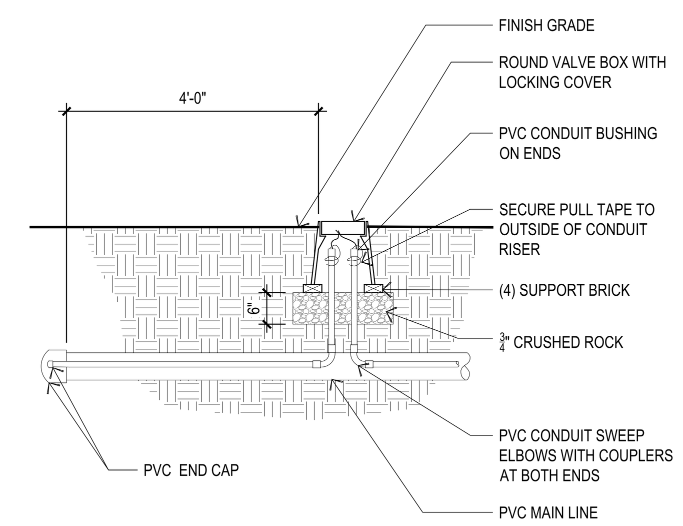

MAIN LINE & WIRE CONDUIT STUB OUT — F3
L2.10 N.T.S

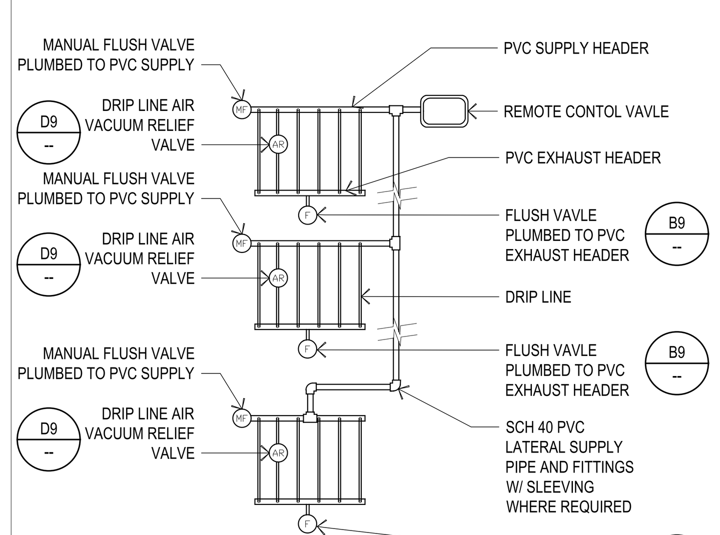

NOTE:
INSTALL AIR VACUUM RELIEF VALVE AT HIGH POINT OF PLANTER.
INSTALL FLUSH VALVE IN AN ACCESSIBLE LOCATION ON THE HEADER.

DRIP LINE ISLAND LAYOUT — H9
L2.10 N.T.S

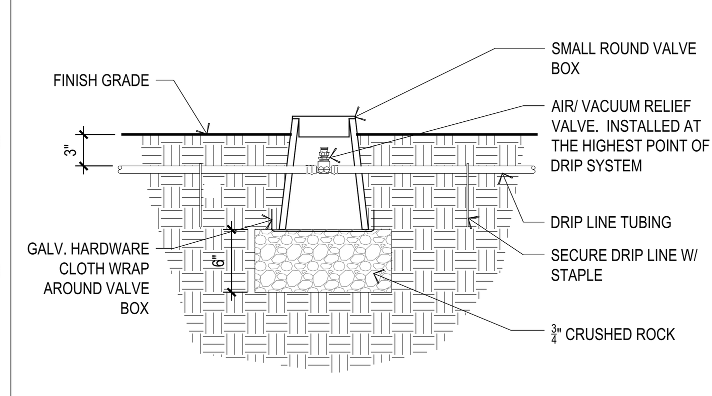

AIR/ VACUUM RELIEF VALVE — H7
L2.10 N.T.S.

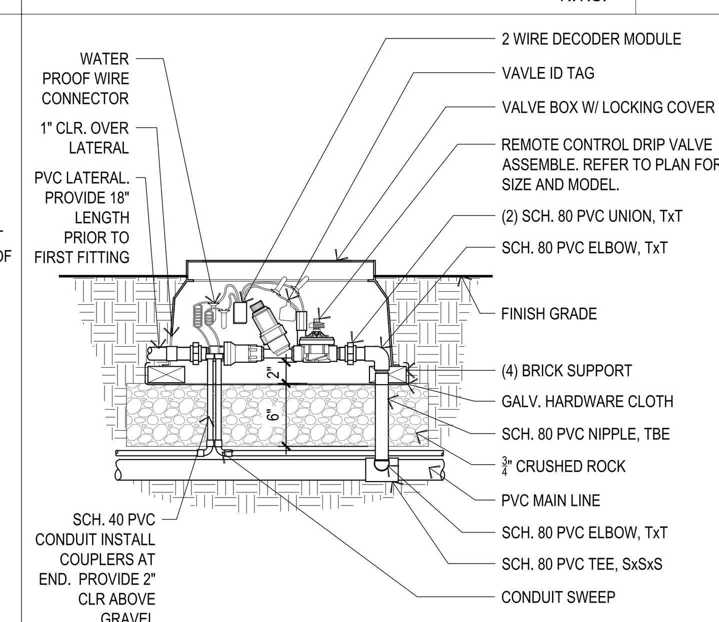

REMOTE CONTROL DRIP VALVE DRIP — H5
L2.10 N.T.S.

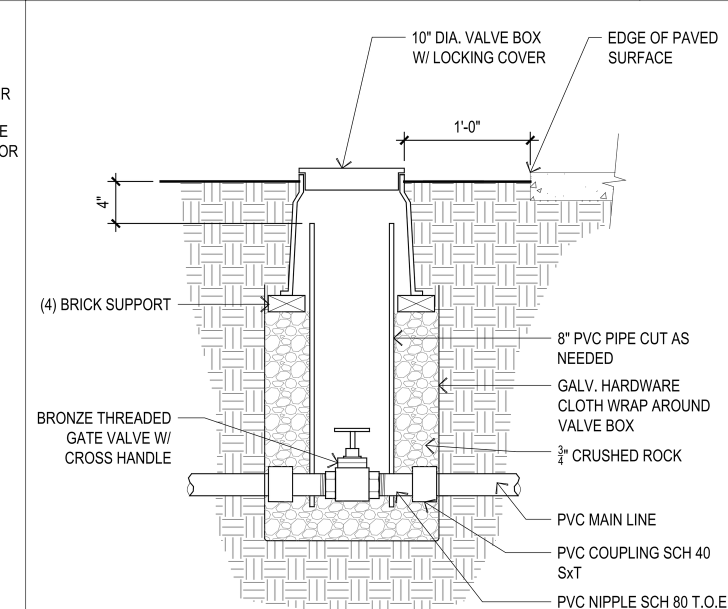

ISOLATION VALVE — H3
L2.10 N.T.S.

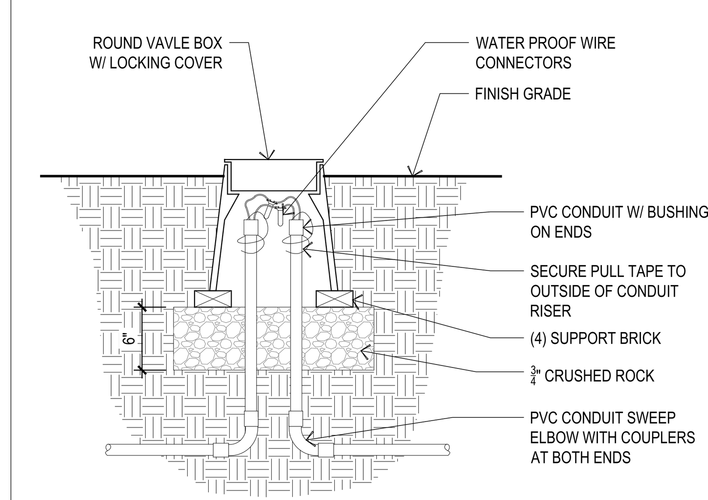

ELECTRIC PULL BOX — H1
L2.10 N.T.S.

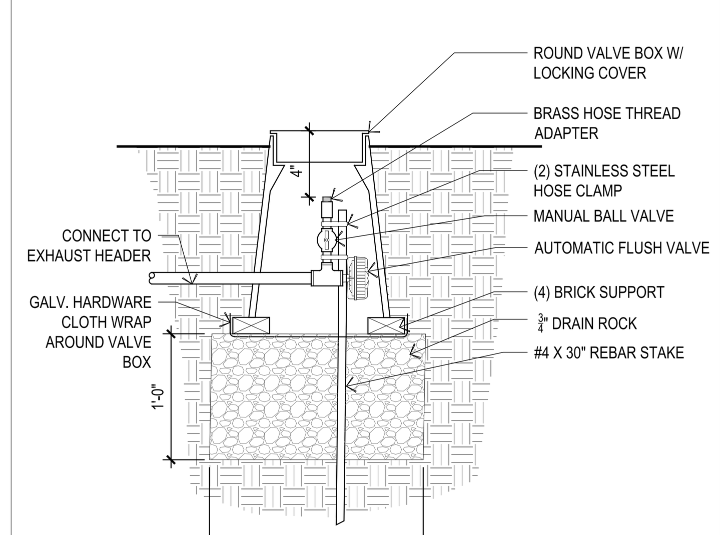

NOTE:
CENTER BALL VALVE IN VALVE BOX OPENING TO ALLOW EASY ACCESS.

FLUSH VALVE- MANUAL/ AUTOMATIC — K9
L2.10 N.T.S.

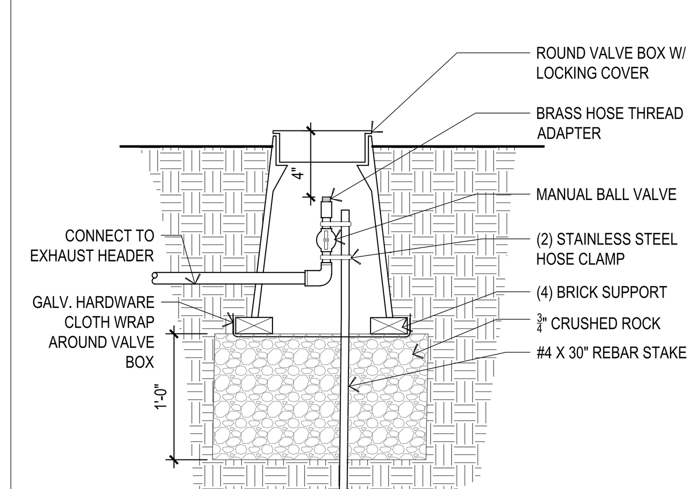

NOTE:
CENTER BALL VALVE IN VALVE BOX OPENING TO ALLOW EASY ACCESS.

MANUAL FLUSH VALVE — K7
L2.10 N.T.S.

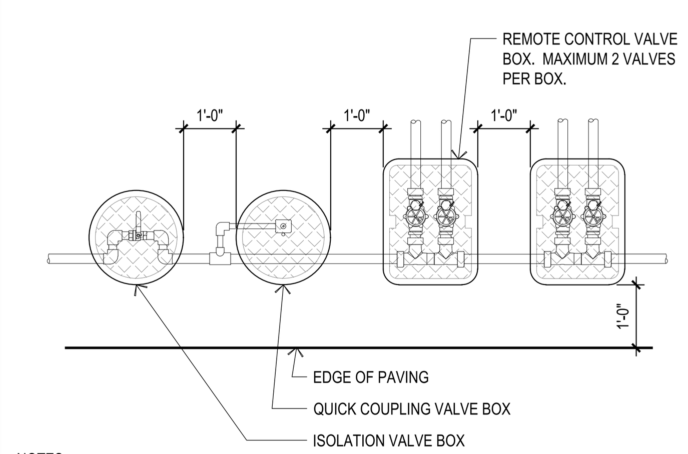

NOTES:

1. CENTER VALVE BOX OVER REMOTE CONTROL VALVE TO ALLOW SERVICING VALVE.
2. SET REMOTE CONTROL VALVE ASSEMBLY IN GROUND COVER/SHRUB AREA WHERE POSSIBLE. INSTALL IN LAWN ONLY IF GROUND COVER DOES NOT EXIST ADJACENT TO LAWN.
2. SET BOXES PARALLEL TO EACH OTHER AND PERPENDICULAR TO EDGE.

VALVE BOX LAYOUT — K5
L2.10 N.T.S.

LPAS
2484 Natomas Park Drive Suite 100 Sacramento CA 95833
916 443 0335 lpasdesign.com **Architecture + Design**

ORGANIC FARM CLASSROOMS INCREMENT 1

INDIAN VALLEY CAMPUS
COLLEGE OF MARIN

NOVATO, CA

FILE NUMBER: 21-C1
IDENTIFICATION STAMP
DIVISION OF THE STATE ARCHITECT
01 - 116913 INCR: 1
AC RE FLS ED SSR CD
DATE 01/12/2018

LICENSED LANDSCAPE ARCHITECT
THAIS DEL CASTILLO License No. 4685
Signature 5/31/2019 Renewal Date
Date
STATE OF CALIFORNIA

ARCHITECT'S STAMP APPROVAL

THIS DOCUMENT CONTAINS INFORMATION THAT IS PROPRIETARY TO LPAS, INC. AND IS FURNISHED FOR THE PURPOSES OF REVIEW, BIDDING OR CONSTRUCTION OF THE PROJECT LISTED IN THE JOB TITLE BOX ABOVE AND SHALL NOT BE USED FOR ANY OTHER PURPOSE OR RELEASED TO ANY OTHER PARTY WITHOUT THE WRITTEN CONSENT OF LPAS, INC. INFORMATION CONTAINED HEREIN IS AN INSTRUMENT OF PROFESSIONAL SERVICES AND SHALL REMAIN THE PROPERTY OF LPAS, INC. ALL RIGHTS RESERVED COPYRIGHT © 2009.

THIS DRAWING IS NOT FINAL OR TO BE USED FOR CONSTRUCTION UNTIL IT IS SIGNED BY THE ARCHITECT AND ENGINEER.

CONSULTANT

IRRIGATION DETAILS

PROJECT NO: 1102-0005
DATE: 11-17-2017

SHEET NO:

L2.11

CONSTRUCTION SET

HYDROZONE_SCHEDULE

TREES	HYDROZONE	WATER USE (PLANT FACTOR)	IRRIGATION (PRECIP. RATE)
	HYDROZONE 1 TREES	MEDIUM (.5)	SUBSURFACE DRIPPER LINE (1.70"/HR)
SHRUBS	**HYDROZONE**	**WATER USE (PLANT FACTOR)**	**IRRIGATION (PRECIP. RATE)**
	HYDROZONE 2 SHRUB AND GROUNDCOVER	MEDIUM (.2)	SUBSURFACE DRIPPER LINE (0.45"/HR)
	HYDROZONE 3 SHRUB AND GROUNDCOVER	MEDIUM (.5)	SUBSURFACE DRIPPER LINE (0.45"/HR)
	HYDROZONE 4 LAWN	HIGH (.8)	OVERHEAD ROTOR SPRAY (0.60"/HR)
	SPECIAL LANDSCAPE AREA HYDROSEED		NON IRRIGATED

HYDROZONE SCHEDULE C1

Station #/ Hydrozone	Hydrozone Irrigation Type	Month of June/ Lanscape ET	Lanscape ET per Week	Irrigation Precipitation Rate in In/Hr	Minutes per Week Controller Water Time	Start Time Show 1 start time minimum	Water Days per Week Show 1 day min.	Minutes of Run Time per Start Time	Eto	Plant Factor	Hydrozone Area in Sq Ft	Irrigation Effiency/ DU	Schedule Multipler
1	Med. Tree Bubbler	3	0.75	1.7	30	1	2	15	39.8	0.5	5,770.0	0.81	1.13
2	Low Shrub Subsurface	1.2	0.3	0.45	45	1	2	23	39.8	0.2	2,249.0	0.81	1.13
3	Med Shrub Subsurface	3	0.75	0.45	113	2	2	28	39.8	0.5	79.0	0.81	1.13
4	High Lawn Spray	4.8	1.2	0.6	141	3	2	24	39.8	0.8	340.0	0.75	1.18

IRRIGATION SCHEDULE D1

California Water Efficient Landscape Worksheet

Reference Evapotranspiration (ET_o)			39.8	Project Type	Non-Residential		0.65
Hydrozone # / Planting Description[a]	Plant Factor (PF)	Irrigation Method[b]	Irrigation Efficiency (IE)[c]	ETAF (PF/IE)	Landscape Area (Sq. Ft.)	ETAF x Area	Estimated Total Water Use (ETWU)[d]
Regular Landscape Areas							
Hydrozone 1/Trees	0.5	Drip	0.81	0.62	996.2	615	15174
Hydrozone 2/Shrubs	0.2	Drip	0.81	0.25	4485.11	1107	27327
Hydrozone 3/Shrubs	0.5	Drip	0.81	0.62	206.85	128	3151
Hydrozone 4/Lawn	0.8	Overhead	0.75	1.07	2638.74	2815	69454
				Totals	8327	4665	115106
Special Landscape Areas							
Hyrdoseed (Unirrigated)				1	11675.19	11675	288097
				Totals	11675	11675	288097
						ETWU Total	403203
						Maximum Allowed Water Allowance (MAWA)[e]	421655

WATER BUDGET D5

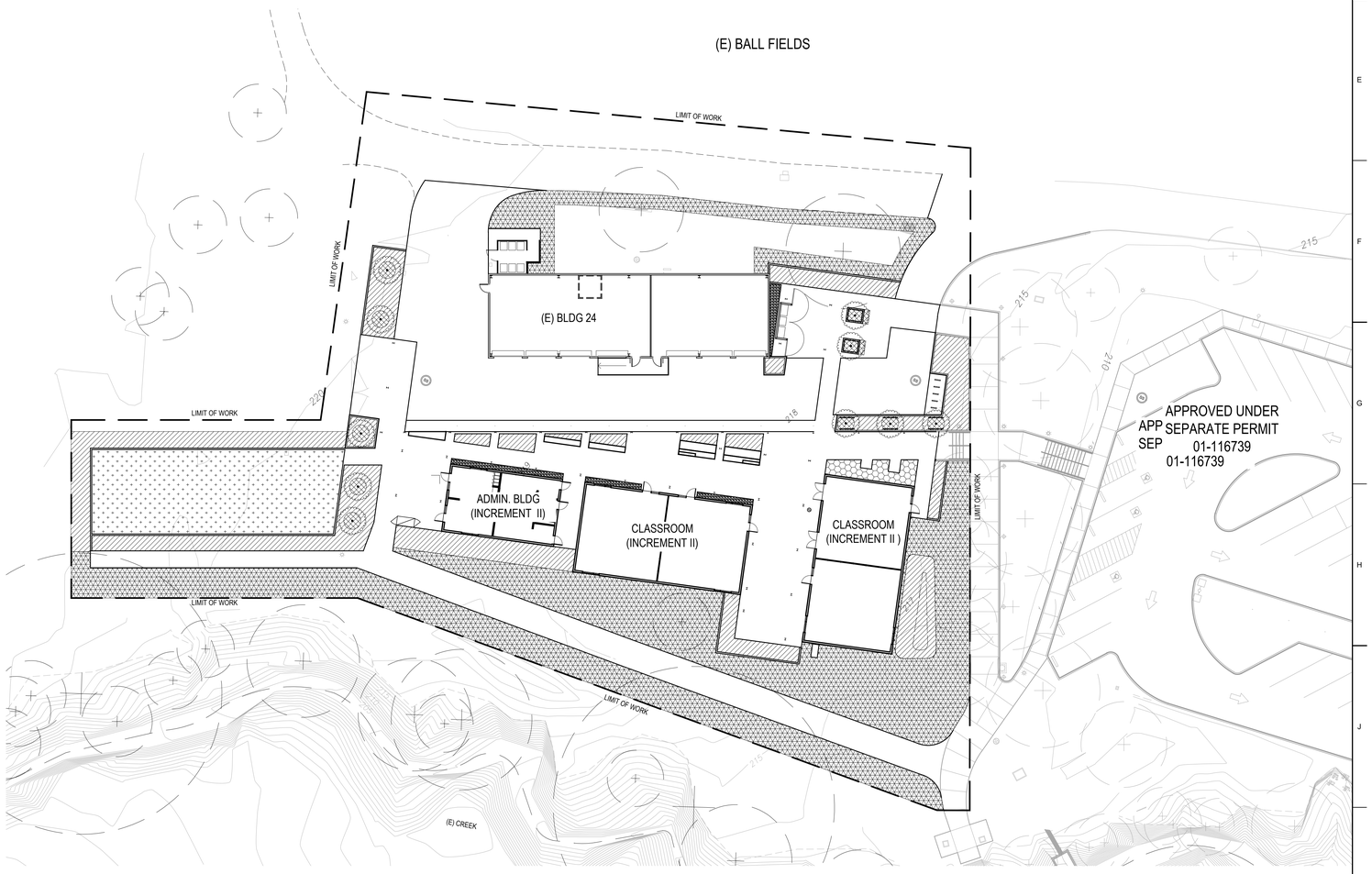

ORGANIC FARM_CLASSROOM HYDROZONE PLAN 1"=20'-0" K1

LPAS

2484 Natomas Park Drive Suite 100 Sacramento CA 95833
916 443 0335 lpasdesign.com Architecture + Design

ORGANIC FARM CLASSROOMS INCREMENT 1

INDIAN VALLEY CAMPUS
COLLEGE OF MARIN

NOVATO, CA

FILE NUMBER: 21-C1
IDENTIFICATION STAMP
DIVISION OF THE STATE ARCHITECT
01 - 116913 INCR: 1
AC RE FLS ED SSR CD
DATE 01/12/2018

LICENSED LANDSCAPE ARCHITECT
PAUL DEFILO License No. 5006
5/30/2019
Renewal Date
STATE OF CALIFORNIA

ARCHITECT'S STAMP APPROVAL

THIS DOCUMENT CONTAINS INFORMATION THAT IS PROPRIETARY TO LPAS, INC. AND IS FURNISHED FOR THE PURPOSES OF REVIEW, BIDDING OR CONSTRUCTION OF THE PROJECT LISTED IN THE JOB TITLE BOX ABOVE AND SHALL NOT BE USED FOR ANY OTHER PURPOSE OR RELEASED TO ANY OTHER PARTY WITHOUT THE WRITTEN CONSENT OF LPAS, INC. INFORMATION CONTAINED HEREIN IS AN INSTRUMENT OF PROFESSIONAL SERVICES AND SHALL REMAIN THE PROPERTY OF LPAS, INC. ALL RIGHTS RESERVED COPYRIGHT © 2009.

THIS DRAWING IS NOT FINAL OR TO BE USED FOR CONSTRUCTION UNTIL IT IS SIGNED BY THE ARCHITECT AND ENGINEER.

CONSULTANT

HYDROZONE PLAN AND CALCULATIONS

PROJECT NO: 1102-0005
DATE: 11-17-2017

SHEET NO:

L2.20

CONSTRUCTION SET

ORGANIC FARM CLASSROOMS INCREMENT II

1800 IGNACIO BLVD.
NOVATO, CA

2017.11.17

CONSTRUCTION SET

2484 Natomas Park Drive Suite 100 Sacramento CA 95833
916 443 0335 lpasdesign.com **Architecture + Design**

Project # 1102-0005

LICENSED ARCHITECT
CURTIS A. OWYANG
C-15758
2-28-19
RENEWAL DATE
STATE OF CALIFORNIA

A0.00

ABBREVIATIONS & CHARACTER SYMBOLS

#	POUND OR NUMBER
&	AND
(E)	EXISTING
(N)	NEW
@	AT
∠	ANGLE
Ø	DIAMETER OR ROUND
℄	CENTERLINE
℄	PROPERTY LINE
A.C.	ASPHALT CONCRETE
A.C.P.	ALUMINUM COMPOSITE PANEL
A.D.	AREA DRAIN
A.F.F.	ABOVE FINISH FLOOR
A.L.S.	ASSISTED LISTENING SYSTEM
ACOUS.	ACOUSTICAL
ADJ.	ADJUSTABLE *OR* ADJACENT
AGGR.	AGGREGATE
ALUM.	ALUMINUM
APPROX.	APPROXIMATELY
ARCH.	ARCHITECTURAL
ASB.	ASBESTOS
ASPH.	ASPHALT
BD.	BOARD
BITUM.	BITUMINOUS
BLDG.	BUILDING
BLK.	BLOCK
BLKG.	BLOCKING
BM.	BEAM
BOTT.	BOTTOM
C.B.	CATCH BASIN
C.B.C.	CALIFORNIA BUILDING CODE
C.G.	CORNER GUARD
C.I.	CAST IRON
C.I.P.	CAST IN PLACE
C.J.	CONTROL JOINT
C.L.	CENTERLINE
C.O.	CASED OPENING
C.W.	CURTAIN WALL
CAB.	CABINET
CEM.	CEMENT
CER.	CERAMIC
CLG.	CEILING
CLKG.	CAULKING
CLO.	CLOSET
CLR.	CLEAR
CNTR.	COUNTER
COL.	COLUMN
COMP.	COMPOSITE
CONC.	CONCRETE
CONN.	CONNECTION
CONSTR.	CONSTRUCTION
CONT.	CONTINUOUS
CORR.	CORRIDOR
CTR.	CENTER
CTSK.	COUNTERSUNK
D.F.	DRINKING FOUNTAIN
D.G.	DECOMPOSED GRANITE
D.O.	DOOR OPENING
D.S.	DOWNSPOUT
D.S.P.	DRY STANDPIPE
DBL.	DOUBLE
DEMO.	DEMOLISH
DEPT.	DEPARTMENT
DET.	DETAIL
DIA.	DIAMETER
DIM.	DIMENSION
DISP.	DISPENSER
DN.	DOWN
DR.	DOOR
DTL.	DETAIL
DWG.	DRAWING
DWR.	DRAWER
E.	EAST
E.J.	EXPANSION JOINT
E.O.S.	EDGE OF SLAB
E.P.	ELEC. PANEL
E.W.C.	ELEC. WATER COOLER
EA.	EACH
EL.	ELEVATION
ELEC.	ELECTRICAL
ELEV.	ELEVATOR
EMER.	EMERGENCY
ENCL.	ENCLOSURE
EQ.	EQUAL
EQPT.	EQUIPMENT
EXP.	EXPANSION
EXPO.	EXPOSED
EXST.	EXISTING
EXT.	EXTERIOR
F.A.	FIRE ALARM
F.B.	FLAT BAR
F.D.	FLOOR DRAIN
F.E.	FIRE EXTINGUISHER
F.E.C.	FIRE EXTINGUISHER CABINET
F.F.	FINISH FLOOR
F.H.C.	FIRE HOSE CABINET
F.O.C.	FACE OF CONCRETE
F.O.F.	FACE OF FINISH
F.O.M.	FACE OF MASONRY
F.O.S.	FACE OF STUD
F.S.	FIRE SPRINKLER
FDN.	FOUNDATION
FIN.	FINISH
FL.	FLOOR
FLASH.	FLASHING
FLUOR.	FLUORESCENT
FPRF.	FIREPROOF
FRMG.	FRAMING
FT.	FOOT *OR* FEET
FTG.	FOOTING
FURR.	FURRING
FUT.	FUTURE
G.B.	GRAB BAR
G.S.M.	GALVANIZED SHEET METAL
GA.	GAUGE
GALV.	GALVANIZED
GL.	GLASS
GND.	GROUND
GR.	GRADE
GYP.	GYPSUM
H.B.	HOSE BIB
H.C.	HOLLOW CORE
H.M.	HOLLOW METAL
HDWD.	HARDWOOD
HDWR.	HARDWARE
HORIZ.	HORIZONTAL
HR.	HOUR
HT.	HEIGHT
I.D.	INSIDE DIAMETER
I.S.A.	INTERNATIONAL SYMBOL OF ACCESSIBILITY
INSUL.	INSULATION
INT.	INTERIOR
JAN.	JANITOR
JT.	JOINT
L.F.	LINEAL FOOT
LAM.	LAMINATE
LAV.	LAVATORY
LKR.	LOCKER
LT.	LIGHT
M.H.	MANHOLE
M.O.	MASONRY OPENING
MAX.	MAXIMUM
MECH.	MECHANICAL
MED.	MEDIUM
MEMB.	MEMBRANE
MFR.	MANUFACTURER
MIN.	MINIMUM
MIR.	MIRROR
MISC.	MISCELLANEOUS
MTD.	MOUNTED
MTL.	METAL
MUL.	MULLION
N.	NORTH
N.I.C.	NOT IN CONTRACT
N.R.	NON RATED
N.T.S.	NOT TO SCALE
NO.	NUMBER
NOM.	NOMINAL
O.A.	OVERALL
O.C.	ON CENTER
O.D.	OUTSIDE DIAMETER
O.F.C.I.	OWNER FURNISHED CONTRACTOR INSTALLED
O.F.D.	OVERFLOW DRAIN
O.F.O.I.	OWNER FURNISHED OWNER INSTALLED
O.H.	OPPOSITE HAND
O.S.B.	ORIENTED STRAND BOARD
O/	OVER
OBS.	OBSCURE
OCC.	OCCUPANTS *OR* OCCUPANCY
OFC.	OFFICE
OPNG.	OPENING
OPP.	OPPOSITE
P.L.	PROPERTY LINE
P.LAM.	PLASTIC LAMINATE
P.T.D.	PAPER TOWEL DISPENSER
P.T.D./R.	PAPER TOWEL DISPENSER/RECEPTACLE
P.T.D.F.	PRESSURE TREATED DOUG FIR
PL.	PLATE
PLAS.	PLASTER
PLYWD.	PLYWOOD
PNTD.	PAINTED
PR.	PAIR
PRCST.	PRECAST
R.C.	RESILIENT CHANNEL
R.D.	ROOF DRAIN
R.O.	ROUGH OPENING
R.R.	RESTROOM
R.W.L.	RAIN WATER LEADER
RAD.	RADIUS
REC.	RECESSED
REF.	REFERENCE
REFR.	REFRIGERATOR
REINF.	REINFORCED
REQ.	REQUIRED
RESIL.	RESILIENT
RGTR.	REGISTER
RISER	RISER
RM.	ROOM
RWD.	REDWOOD
S.	SOUTH
S.A.M.	SELF-ADHERED MEMBRANE
S.C.	SOLID CORE
S.C.D.	SEAT COVER DISPENSER
S.D.	SOAP DISPENSER
S.F.	SQUARE FOOT
S.M.S.	SHEET METAL SCREW
S.N.D.	SANITARY NAPKIN DISPENSER
S.N.R.	SANITARY NAPKIN RECEPTACLE
S.O.G.	SLAB ON GRADE
S.S.	STAINLESS STEEL
SCHED.	SCHEDULE
SECT.	SECTION
SEP.	SEPARATE *OR* SEPARATION
SHT.	SHEET
SHTG.	SHEATHING
SHWR.	SHOWER
SIM.	SIMILAR
SPEC.	SPECIFICATION
SQ.	SQUARE
ST.	STATION
STD.	STANDARD
STL.	STEEL
STOR.	STORAGE
STRL.	STRUCTURAL
SUSP.	SUSPENDED
SYM.	SYMMETRICAL
T&G	TONGUE AND GROOVE
T.	TEMPERED GLASS
T.B.	TOWEL BAR
T.O.C.	TOP OF CONCRETE
T.O.P.	TOP OF PARAPET
T.O.STL.	TOP OF STEEL
T.O.W.	TOP OF WALL
T.P.	TOP OF PAVEMENT
T.P.D.	TOILET PAPER DISPENSER
TEL.	TELEPHONE
TER.	TERRAZZO
THK.	THICK
TRANS.	TRANSITION
TRD.	TREAD
TYP.	TYPICAL
U.O.N.	UNLESS OTHERWISE NOTED
UNF.	UNFINISHED
UR.	URINAL
UTIL.	UTILITY
V.I.F.	VERIFY IN FIELD
VER.	VERIFY
VERT.	VERTICAL
VEST.	VESTIBULE
W.	WEST
W.C.	WATER CLOSET
W.O.	WHERE OCCURS
W.P.	WATERPROOF
W.V.	WOOD VENEER
W/	WITH
W/O	WITHOUT
WD.	WOOD
WSCT.	WAINSCOT
WT.	WEIGHT

DRAFTING & MATERIAL SYMBOLS

FLOW LINE
NEW CONTOUR
EXISTING CONTOUR
CENTER LINE
PROPERTY LINE
PROJECTED LINE
HIDDEN LINE
BREAK LINE
MATCH LINE
CONTRACT LIMIT LINE
2ND FLOOR FFEL: 12'-8" — ELEVATION MARK OR DATUM POINT
B1 — WALL TYPE
2 A — REVISION MARK
12 — GRID LINES
D — NUMBERS VERTICAL / LETTERS HORIZONTAL
NORTH ARROW
LAUNDRY 155 — ROOM NAME AND NUMBER
222.2 — DOOR NUMBER
E — WINDOW TYPE
36 — EQUIPMENT TYPE
1 — KEYNOTE
SECTION (BUILDING)
SECTION IDENTIFICATION
SHEET WHERE SECTION IS DRAWN
PARTIAL SECTION
SECTION IDENTIFICATION
SHEET WHERE SECTION IS DRAWN
DETAIL
DETAIL IDENTIFICATION
SHEET WHERE DETAIL IS DRAWN

EARTH
POROUS FILL
CONCRETE
CAST STONE
CONCRETE BLOCK
BRICK
METAL
CONTNUOUS WOOD
SHIM OR NON-CONT. WOOD BLOCKING
FINISH WOOD
PLYWOOD
GYPSUM WALLBOARD
STONE
RIGID INSULATION
BATT INSULATION
ACOUSTIC TILE
PLASTER ON METAL LATH
PAVING
TILE
GLASS
EXPANSION MATERIAL
SEALANT W/ BACK-UP MATERIAL
CARPET
INTERIOR ELEVATION
ELEVATION IDENTIFICATION
SHEET WHERE ELEVATION IS DRAWN
VIEW SHOWN
ALIGN FINISH SURFACES

GENERAL NOTES

1. CONTRACTOR SHALL VERIFY ALL CONDITIONS AND DIMENSIONS ON SITE PRIOR TO STARTING CONSTRUCTION. SHOULD A DISCREPANCY APPEAR IN THE SPECIFICATIONS OR DRAWINGS, OR IN THE WORK DONE BY OTHERS FROM THE CONTRACT DOCUMENTS THAT AFFECT ANY WORK, NOTIFY THE ARCHITECT AT ONCE FOR INSTRUCTION ON HOW TO PROCEED. IF THE CONTRACTOR PROCEEDS WITH THE WORK AFFECTED WITHOUT INSTRUCTIONS FROM THE ARCHITECT, THE CONTRACTOR SHALL MAKE GOOD ANY RESULTING DAMAGE OR DEFECT TO THE SATISFACTION OF THE ARCHITECT. SHOULD A CONFLICT OCCUR IN OR BETWEEN DRAWINGS AND SPECIFICATIONS, OR WHERE DETAIL REFERENCES ON CONTRACT DRAWINGS HAVE BEEN OMITTED, THE CONTRACTOR IS DEEMED TO HAVE ESTIMATED THE MOST EXPENSIVE MATERIALS AND CONSTRUCTION METHOD INVOLVED, UNLESS A WRITTEN DECISION FROM THE ARCHITECT HAS BEEN OBTAINED WHICH DESCRIBES AN ALTERNATE METHOD AND/OR MATERIALS.
2. THE CONTRACTOR SHALL CONFINE HIS OPERATIONS ON THE SITE TO AREAS PERMITTED BY THE OWNER. THE WORK SHALL BE DONE IN ACCORDANCE WITH APPLICABLE LAWS, LOCAL ORDINANCES, PERMITS AND THE CONTRACT DOCUMENTS. THE JOB SITE SHALL BE MAINTAINED IN A CLEAN, ORDERLY CONDITION FREE OF DEBRIS AND LITTER, AND SHALL NOT BE UNREASONABLY ENCUMBERED WITH ANY MATERIALS OR EQUIPMENT. EACH SUB-CONTRACTOR IMMEDIATELY UPON COMPLETION OF EACH PHASE OF HIS/HER WORK SHALL REMOVE ALL TRASH AND DEBRIS AS A RESULT OF HIS OPERATION.
3. CONTRACTOR SHALL NOTIFY THE ARCHITECT WHERE A CONFLICT OCCURS ON ANY OF THE CONTRACT DOCUMENTS OR DRAWINGS. CONTRACTOR IS NOT TO ORDER MATERIAL OR CONSTRUCT ANY PORTION OF THE BUILDING THAT IS IN CONFLICT UNTIL CONFLICT IS RESOLVED WITH THE AFFECTED PARTIES.
4. DIMENSIONSING RULES:
   - A. NOTED DIMENSIONS SHALL AT ALL TIMES TAKE PRECEDENCE OVER SCALED DIMENSIONS
   - B. ALL DIMENSIONS OF NEW WORK ARE TO THE FACE OF STUD U.O.N.
   - C. ALL DIMENSIONS OF EXISTING WORK ARE TO FACE OF FINISH U.O.N.
   - D. CEILING HEIGHT DIMENSIONS ARE FROM TOP OF FLOOR SLAB TO FINISH FACE OF CEILING.
   - E. DIMENSIONS NOTED "CLEAR" OR "CLR" MUST BE PRECISELY MAINTAINED.
   - F. DIMENSIONS ARE NOT ADJUSTABLE WITHOUT APPROVAL OF THE ARCHITECT.
   - G. +/- VERTICAL DIMENSIONS ARE FROM THE TOP OF THE FLOOR SLAB DATUM LINE, ESTABLISHED BY THE CONTRACTOR SUBJECT TO THE APPROVAL OF THE OWNER OR ARCHITECT, UNLESS OTHERWISE NOTED.
   - H. DIMENSIONS MARKED "A.F.F." ARE ABOVE FINISHED FLOOR MATERIALS. IN CARPETED AREAS, THE TOP OF SLAB IS CONSIDERED TO BE THE FINISHED FLOOR.
   - I. DIMENSIONS MARKED V.I.F. SHALL BE "VERIFIED" IN THE FIELD BY THE CONTRACTOR.
   - J. ALL DIMENSIONS ARE TO STRUCTURAL COMPONENTS UNLESS OTHERWISE NOTED.
   - K. DIMENSIONS LOCATING DOORS ARE TO THE INSIDE EDGE OF JAMB, U.N.O.
5. SHOULD ANY CONDITIONS DEVELOP NOT COVERED BY THE CONTRACT DOCUMENTS, OR IF A CHANGE IN THE SCOPE OF WORK IS PROPOSED, A CHANGE ORDER DETAILING AND SPECIFYING THE REQUIRED CHANGE(S) SHALL BE SUBMITTED TO AND APPROVED BY DSA-ACCESS BEFORE PROCEEDING WITH THE WORK.

PROJECT TEAM

OWNER
COLLEGE OF MARIN
CONTACT: GREG NELSON
PH. (415) 884-3101

ELECTRICAL ENGINEER
THE ENGINEERING ENTERPRISE
1125 HIGH STREET
AUBURN, CA 95603
PH. (530) 886-8556

STRUCTURAL ENGINEER
THORTON TOMASETTI, INC.
650 CALIFORNIA STREET, SUITE 1400
SAN FRANCISCO, CA
PH. (415) 365-6901

LANDSCAPE ARCHITECT
LPAS
2484 NATOMAS PARK DR., SUITE 100
SACRAMENTO, CA 95833
PH. (916) 443-0335
FAX (916) 441-2823

CIVIL ENGINEER
CSW
45 Leveroni Court
Novato, CA 94949
PH. (415) 883-9850

MECHANICAL AND PLUMBING
TURLEY
2431 CAPITOL AVE
SACRAMENTO, CA 95816
PH. (916) 325-1065

DRAWING INDEX

INCREMENT 1

A0.00	COVER SHEET
A0.01	INDEX SHEET
A0.02	CAL GREEN CHECK LIST (DSA)
A0.03	CAL GREEN CHECK LIST (DSA)
A0.10	OVERALL CAMPUS PLAN
A0.20	CODE AND SITE ANALYSIS
A0.30	SITE ACCESSIBILITY PLAN
C1.00	SITE DEMO PLAN
C2.00	GRADING AND DRAINAGE PLAN
C3.00	UTILITY PLAN
C4.00	CIVIL DETAILS
S1.01	GENERAL NOTES
S2.01	CONCRETE TYPICAL DETAILS
S2.02	CONCRETE TYPICAL DETAILS
S3.01	METAL DECK DETAILS AND NOTES
A1.00	OVERALL SITE PLAN
A1.01	ENLARGED SITE PLAN
A1.11	SITE DETAILS
A1.25	FARM STAND PLAN, ELEVATIONS, AND DETAILS
A2.01	FOUNDATION AND FRAMING PLAN
A2.02	ROOF PLAN
A2.11	ELEVATIONS AND SECTIONS
A2.21	FOUNDATION DETAILS
A2.22	STRUCTURE DETAILS
E0.01	SYMBOLS LIST & DRAWING INDEX
E0.02	SCHEDULES & RISER DIAGRAMS
E0.03	TITLE 24 SHEETS
E1.01	POWER & CONDUIT SITE PLAN
E1.02	POWER & LIGHTING PLAN
E4.01	DETAILS
MP0.11	MECHANICAL & PLUMBING LEGEND, SCHEDULE & NOTES
MP0.21	MECHANICAL & PLUMBING LEGEND, SCHEDULE & NOTES
MP2.11	SITE PLAN & ENLARGED PANTRY PLUMBING PLAN
L1.00	LANDSCAPE PLAN
L1.11	LANDSCAPE DETAILS
L2.00	IRRIGATION PLAN
L2.11	IRRIGATION DETAILS
L2.20	HYDROZONE PLAN AND CALCULATIONS

INCREMENT 2 - 60x32 BUILDING

A0.00	COVER SHEET
A0.01	INDEX SHEET - FOR REFERENCE ONLY
A0.20	CODE AND SITE ANALYSIS - FOR REFERENCE ONLY
A0.30	SITE ACCESSIBILITY PLAN - FOR REFERENCE ONLY
A1.00	OVERALL SITE PLAN - FOR REFERENCE ONLY
A1.02	ENLARGED SITE PLAN
E3.01	BUILDING 1, 2, & 3 FIRE ALARM PLAN
E3.02	FIRE ALARM SCHEDULES, NOTES & DETAILS
TS	TITLE SHEET
N1.0	GENERAL NOTES
N2.0	GENERAL NOTES
N3.0	SCHEDULES
N4.0	ACCESSIBILITY AND SIGNAGE
N5.0	MUILTIPLE FLOOR PLAN CONFIGURATIONS
EN.1	ENERGY CALCULATIONS
EN.2	ENERGY CALCULATIONS
EN.3	ENERGY CALCULATIONS
EN.4	ENERGY CALCULATIONS
EN.5	ENERGY CALCULATIONS
EN.6	ENERGY CALCULATIONS
A1.0	DEMONSTRATION KITCHEN FLOOR PLAN
A1.0A	CLASSROOM FLOOR PLAN
A2.0	ROOF PLAN
A2.1	ROOF PLAN DETAILS
A4.0	TYPICAL INTERIOR ELEVATIONS
A4.0A	TYPICAL INTERIOR ELEVATIONS
A5.6	TYPICAL EXTERIOR SYNTHETIC STUCCO ELEVATIONS
A5.6A	TYPICAL EXTERIOR SYNTHETIC STUCCO ELEVATIONS
A5.7	TYPICAL ARCHITECTURAL SYNTHETIC STUCCO DETAILS
A7.2	MISCELLANEOUS DETAILS
S0.0	STEEL MEMBER PROPERTIES
S1.1	TYP 50+15 PSF CONCRETE FOUNDATION PLAN
S1.4	CONCRETE FOUNDATION DETAILS
S1.5	CONCRETE FOUNDATION OPTIONAL UTILITY OPENINGS IN FOOTINGS
S1.6	CONCRETE FOUNDATION DETAILS
S1.7	CONCRETE FOUNDATION OPTIONAL UTILITY OPENINGS IN FOOTINGS
S3.3	FLOOR FRAMING CONCRETE 3-W
S4.1	ROOF FRAMING OPEN SOFFIT DETAILS
S4.2	ROOF FRAMING CLOSED SOFFIT
S5.0	MOMENT RESISTANT FRAME ELEVATIONS
S5.1	FRAME CONNECTION DETAILS
S6.0	STRUCTURAL ELEVATIONS
S8.0	WOOD WALL FRAMING
S8.1	WALL FRAMING DETAILS
M1.0	TYPICAL REFLECTED CEILING PLAN
M1.0A	TYPICAL REFLECTED CEILING PLAN
M1.4	MECHANICAL BUILDING SECTION & CEILING DETAILS
M1.5	MECHANICAL BUILDING DETAILS
M1.6	MECHANICAL ROOF DETAILS
M1.7	CEILING AND MECHANICAL NOTES
E1.0	TYPICAL ELECTRICAL PLAN
E1.0A	TYPICAL ELECTRICAL PLAN
E1.2	ELECTRICAL NOTES AND DETAILS
P1.0	RESTROOM OPTION FLOOR PLANS
P2.0	PLUMBING DETAILS
P3.0	PLUMBING ISOMETRIC

INCREMENT 2 - 24x40 BUILDING

TS	TITLE SHEET
N1.0	GENERAL NOTES
N2.0	GENERAL NOTES
N3.0	SCHEDULES
N4.0	ACCESSIBILITY AND SIGNAGE
N5.0	MUILTIPLE FLOOR PLAN CONFIGURATIONS
EN.1	ENERGY CALCULATIONS
EN.2	ENERGY CALCULATIONS
EN.3	ENERGY CALCULATIONS
EN.4	ENERGY CALCULATIONS
EN.5	ENERGY CALCULATIONS
EN.6	ENERGY CALCULATIONS
A1.0	TYPICAL FLOOR PLAN
A2.0	ROOF PLAN
A2.1	ROOF DETAILS
A4.0	INTERIOR ELEVATIONS - TYPICAL CLASSROOM
A4.1	INTERIOR ELEVATIONS - RESTROOM OPTION
A5.6	TYPICAL EXTERIOR ELEVATIONS - SYNTHETIC STUCCO OPTION
A5.7	TYPICAL ARCHITECTURAL DETAILS - SYNTHETIC STUCCO OPTION
A7.2	MISCELLANEOUS ARCHITECTURAL DETAILS
S0.0	STEEL MEMBER PROPERTIES
S1.1	CONCRETE FOUNDATION PLAN - 50+15 PSF LIVE LOAD
S1.4	CONCRETE FOUNDATION DETAILS
S1.5	CONCRETE FOUNDATION DETAILS
S1.6	CONCRETE FOUNDATION DETAILS
S1.7	CONCRETE FOUNDATION OPTIONAL UTILITY OPENINGS IN FOOTINGS
S3.3	FLOOR FRAMING PLAN & DETAILS - CONCRETE/3-W DECK OPTION
S4.1	FLOOR FRAMING PLAN & DETAILS - ENCLOSED SOFFIT OPTION
S4.2	FLOOR FRAMING DETAILS
S5.0	MOMENT FRAME ELEVATIONS & DETAILS
S5.1	MOMENT FRAME CONNECTION DETAILS
S6.0	TYPICAL LONGITUDINAL & TRANSVERSE FRAME ELEVATIONS
S8.0	WOOD STUDS WALL FRAMING ELEVATIONS & SCHEDULES
S8.1	WOOD STUDS WALL FRAMING DETAILS
M1.0	TYPICAL REFLECTED CEILING PLAN
M1.4	MECHANICAL BUILDING SECTION & CEILING DETAILS
M1.5	CEILING & MECHANICAL DETAILS
M1.6	MECHANICAL ROOF DETAILS
M1.7	CEILING NOTES & MECHANICAL NOTES, SCHEDULES
E1.0	TYPICAL ELECTRICAL PLAN
E1.2	ELECTRICAL NOTES, PANEL LAYOUT & DETAILS
P1.0	RESTROOM OPTION PLUMBING PLANS & FIXTURE SCHEDULE
P2.0	PLUMBING DETAILS & ACCESSIBLE DETAILS
P3.0	PLUMBING ISOMETRICS DRAWINGS

SCOPE OF WORK:
1.0 SITE CONTRACTOR SHALL BE RESPONSIBLE FOR ALL WORK INDICATED IN INCREMENT 1.
2.0 SITE CONTRACTOR HAS LIMITED WORK FOR INCREMENT 2; INCLUDING FIRE ALARM, AND BUILDING FOUNDATIONS FOR MODULAR BUILDINGS. MARIN COMMUNITY COLLEGE DISTRICT HOLDS THE CONTRACT FOR MODULAR CONSTRUCTION.

CONTACT INFORMATION

DISTRICT PROJECT MANAGER
COLLEGE OF MARIN
CONTACT: DONNA MARTIN
PH: 408-547-7057

LANDSCAPE ARCHITECT
LPAS
2484 NATOMAS PARK DR., SUITE 100
SACRAMENTO, CA 95833
PH. (916) 443-0335
FAX (916) 441-2823

APPLICABLE CODES

2016 CALIFORNIA CODE OF REGULATIONS, TITLE 24

PART 1	CALIFORNIA ADMINISTRATIVE CODE
PART 2	CALIFORNIA BUILDING CODE
PART 3	CALIFORNIA ELECTRICAL CODE
PART 4	CALIFORNIA MECHANICAL CODE
PART 5	CALIFORNIA PLUMBING CODE
PART 9	CALIFORNIA FIRE CODE
PART 11	CALIFORNIA GREEN BUILDING STANDARDS CODE

DEFERRED SUBMITTAL

1. NONE

PROJECT DESCRIPTION

As allowed per IR A-11 Increment Submittals:

Increment 1: Site improvements including utilities, hardscape, landscape, shade structures, access from parking lot

Building 24 is DSA #109778; access only. Building 24 is a barn and is considered a non-building structure. No work to interior of building; limited work to exterior of building including access, lighting, and painting.

Building 25 and 26, DSA #109778, to be salvaged to owner.

Increment 2: Three modular buildings. Two modular buildings house two classrooms each. One modular building provides offices and restrooms. Fire alarm and signage for buildings, exterior drinking fountain barrier.

Parking lot DSA #: 01-116739 OTC.
Increment 1 DSA #: 01-116913

PROJECT LOCATION

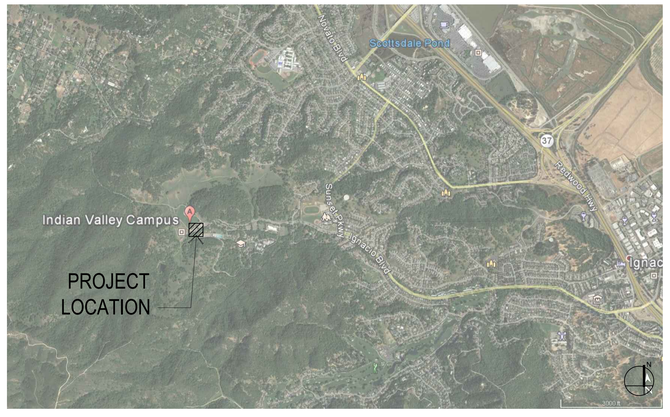

STATEMENT OF GENERAL CONFORMANCE

Statement of General Conformance
FOR ARCHTIECTS/ENGINEERS WHO UTILIZE PLANS,
INCLUDING BUT NOT LIMITED TO SHOP DRAWINGS, PREPARED BY OTHER LICENSED DESIGN PROFESSIONALS AND/OR CONSULTANTS

(DSA Acceplication No.: DSA File No.:)

☐ The drawings or sheets listed on the cover or index sheet
☐ This drawing, page or specification/calculations

have been prepared by other design professionals or consultants who are licensed and/or authorized to prepare such drawings in this state. It has been examined by me for:

1. design intent and appears to meet the appropriate requirements of Title 24, California Code of Regulations and the project specifications prepared by me, and
2. coordination with my plans and specifications and is acceptable for incorporation into the construction of this project.

The statement of General Conformance "shall not be construed as relieving me of my rights, duties, and responsibilities under Sections 17302 and 81138 of the Education Code and Sections 4-336, 4-341 and 4-344" of Title 24, Part 1. (Title 24, Part 1, Section 4-317(b))

I find that: ☐ The drawings or sheets listed on the cover or index sheet
☐ This drawing or page

☐ is/are in general conformance with the project design, and
☐ has/have been coordinated with the project plans and specifications

Signature:_____ Date: _____

Architect or Engineer designated to be in general responsible charge

Print Name:_____

License No._____ Expiration Date:_____

LPAS

2484 Natomas Park Drive Suite 100 Sacramento CA 95833
916 443 0335 lpasdesign.com Architecture + Design

ORGANIC FARM CLASSROOMS INCREMENT 2

INDIAN VALLEY CAMPUS
COLLEGE OF MARIN

NOVATO, CA

FOR REFERENCE ONLY

LICENSED ARCHITECT
CURTIS A. OWYANG
C-15758
2-28-19
RENEWAL DATE
STATE OF CALIFORNIA

ARCHITECT'S STAMP APPROVAL

THIS DOCUMENT CONTAINS INFORMATION THAT IS PROPRIETARY TO LPAS, INC. AND IS FURNISHED FOR THE PURPOSES OF REVIEW, BIDDING OR CONSTRUCTION OF THE PROJECT LISTED IN THE JOB TITLE BOX ABOVE AND SHALL NOT BE USED FOR ANY OTHER PURPOSE OR RELEASED TO ANY OTHER PARTY WITHOUT THE WRITTEN CONSENT OF LPAS, INC. INFORMATION CONTAINED HEREIN IS AN INSTRUMENT OF PROFESSIONAL SERVICES AND SHALL REMAIN THE PROPERTY OF LPAS, INC. ALL RIGHTS RESERVED COPYRIGHT © 2009.

THIS DRAWING IS NOT FINAL OR TO BE USED FOR CONSTRUCTION UNTIL IT IS SIGNED BY THE ARCHITECT AND ENGINEER.

CONSULTANT

INDEX SHEET

PROJECT NO: 1102-0005
DATE: 11-17-2017

SHEET NO:

A0.01

CONSTRUCTION SET

CHAPTER 7A REQUIREMENTS

705A.4	ROOF GUTTERS SHALL PREVENT THE ACCUMULATION OF LEAVES AND DEBRIS IN THE GUTTER.
706A.1	VENTILATION VENTS TO ATTICS AND ROOFS SHALL PREVENT PASSAGE OF BURNING EMBERS AND FLAMES.
706A.3	VENTS SHALL NOT BE INSTALLED ON UNDERSIDE OF EAVES AND CORNICES UNLESS THEY COMPLY WITH LISTED EXCEPTIONS.
707A.3	EXTERIOR WALLS SHALL BE NON-COMBUSTIBLE OR COMPLY WITH LISTED EXCEPTIONS.
	EXCEPTION 1 - ONE LAYER 5/8" TYPE X GYPSUM SHEATHING APPLIED BEHIND THE EXTERIOR COVERING ON THE EXTERIOR SIDE OF THE FRAMING.
707A.5	ENCLOSED ROOF EAVE SOFFITS SHALL BE PROTECTED BY NON-COMBUSTIBLE MATERIAL, IGNITION RESISTANT MATERIAL, ONE LAYER 5/8" TYPE X GYPSUM SHEATHING APPLIED BEHIND EXTERIOR COVERING ON THE UNDERSIDE OF RAFTERS.
708A	EXTERIOR GLAZED WINDOWS AND EXTERIOR GLAZED DOOR ASSEMBLY SHALL BE MULTI-PANE GLAZING WITH ONE TEMPERED PANE MEETING THE REQUIREMENTS OF SECTION 2406 SAFETY GLAZING.
708A.3	EXTERIOR DOOR SURFACE OF CLADDING SHALL BE NONCOMBUSTIBLE, OR CONSTRUCTED OF SOLID CORE WOOD WITH STILES AND RAILS NOT LESS THAN 1'-3/8" THICK, OR WITH A FIRE-RESISTANCE RATING OF 20 MINUTES.
EXIT SEPARATION:	EXIT SEPARATION SHALL BE GREATER THAN 1/2 DIAGONAL
OCCUPANCY GROUP:	BUSINESS GROUP B (EDUCATIONAL OCCUPANCIES FOR STUDENTS ABOVE THE 12TH GRADE)
CONSTRUCTION TYPE:	VB
FIRE HAZARD:	PROJECT IS IN HIGH FIRE HAZARD SEVERITY PER CHAPTER 7A
LIQUEFACTION HAZARD:	PROJECT IS IN A MAPPED LIQUEFACTION ZONE PER CITY OF NOVATO. PER GEOTECHNICAL REPORT, THE POTENTIAL FOR SEISMICALLY INDUCED LIQUEFACTION IS LOW AND ANTICIPATED SETTLEMENTS ARE EXPECTED TO BE LESS THAN 1/4 INCH.
FIRE SPRINKLERS:	NONE
ALLOWABLE AREA FACTOR:	9000 SF WITHOUT HEIGHT INCREASE FOR B OCCUPANCY OR FRONTAGE INCREASE
AREA INCREASE (PER STORY):	N/A
ALLOWABLE AREA (PER BUILDING):	N/A

BUILDING AREA:

- BUILDING GROSS AREA:	
- CLASSROOM BUILDING 1:	1,930 SF
- CLASSROOM BUILDING 2:	1,930 SF
- ADMIN. BUILDING 3:	970 SF
- FARM STAND BUILDING 4:	54 SF
TOTAL GROSS AREA:	4,884 SF
- ROOF OVERHANG AREA:	1,190 SF
- SHADE AREA	2,360 SF

SHADE AREA IS EXCLUDED FROM BUILDING GROSS AREA PER 3104.1. A FIRE BARRIER IS NOT REQUIRED AT THE CONNECTION OF THE SHADE STRUCTURES TO BUILDING PER EXCEPTION UNDER 3104.5

MAXIMUM ALLOWABLE STORIES: (FROM TABLE 504.4, WITHOUT INCREASE)	2
ACTUAL NUMBER OF STORIES:	1
ALLOWABLE BUILDING HEIGHT: (FROM TABLE 504.3, WITHOUT INCREASE)	40'
ACTUAL BUILDING HEIGHT:	10'

RATING OF COMPONENTS (TABLE 601):

PRIMARY STRUCTURAL FRAME:	0
EXTERIOR LOAD- BEARING WALLS:	0
EXTERIOR NON-LOAD-BEARING WALLS/PARTITIONS:	0
INTERIOR LOAD-BEARING WALLS:	0
INTERIOR NON-LOAD-BEARING WALLS/PARTITIONS:	0
FLOORS & SECONDARY MEMBERS:	0
ROOFS & SECONDARY MEMBERS:	0
SUPPORTING STRUCTURE FOR HORIZ. ASSEMBLIES:	0

HOOD OVER COOK TOP NOT REQUIRED TO BE A TYPE 1 HOOD PER CFC 2016 SECTION 609.2 EXCEPTION.

FIRE HYDRANT REQUIREMENTS

PER CFC PART 9, APPENDIX BB, TABLE B105.1(2), FIRE FLOW CALCULATION AREA FOR TYPE V-B 4,801 - 6,200 RESULTS IN FIRE-FLOW OF 2,000 GPM; FLOW DURATION 2 HOURS.

PER CFC PART 9, APPENDIX C, TABLE, C1.02.1, MINIMUM NUMBER OF FIRE HYDRANTS IS 2, AVERAGE SPACING IS 200', MAXIMUM DISTANCE FROM ANY POINT ON STREET OR ROAD FRONTAGE TO A HYDRANT IS 225 FEET.

CODE ANALYSIS D1

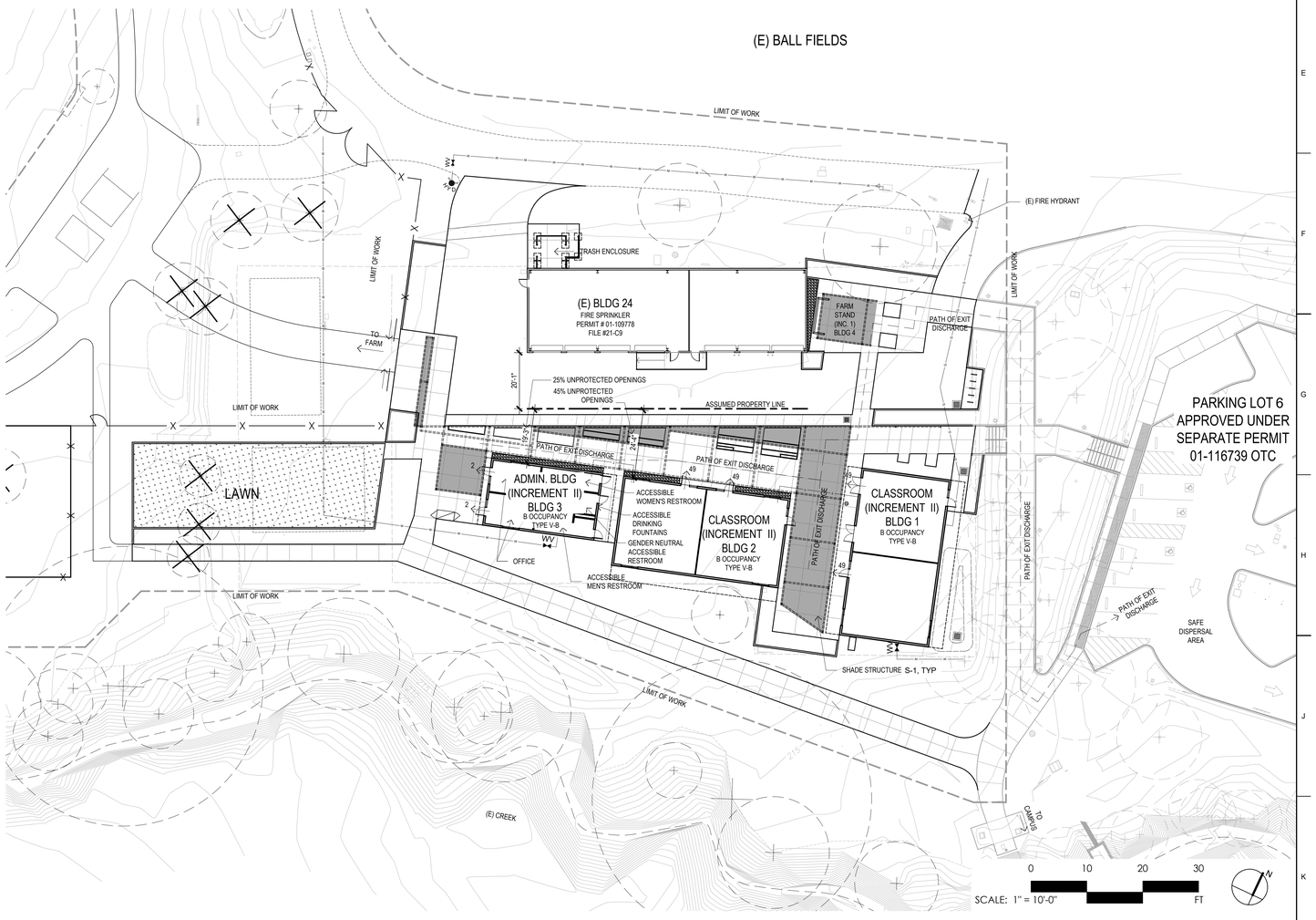

ORGANIC FARM_CLASSROOM SITE PLAN 1"=20'-0" K1

LPAS

2484 Natomas Park Drive Suite 100 Sacramento CA 95833
916 443 0335 lpasdesign.com Architecture + Design

ORGANIC FARM CLASSROOMS INCREMENT 1

INDIAN VALLEY CAMPUS
COLLEGE OF MARIN

NOVATO, CA

FOR REFERENCE ONLY

FILE NUMBER: 21-C1
IDENTIFICATION STAMP
DIVISION OF THE STATE ARCHITECT
01 - 116913 INCR: 1
AC RE FLS ED SSR CD
DATE 01/12/2018

LICENSED ARCHITECT
CURTIS A. OWYANG
C-26758
EXP. 08-31-2019
STATE OF CALIFORNIA

ARCHITECT'S STAMP APPROVAL

THIS DOCUMENT CONTAINS INFORMATION THAT IS PROPRIETARY TO LPAS, INC. AND IS FURNISHED FOR THE PURPOSES OF REVIEW, BIDDING OR CONSTRUCTION OF THE PROJECT LISTED IN THE JOB TITLE BOX ABOVE AND SHALL NOT BE USED FOR ANY OTHER PURPOSE OR RELEASED TO ANY OTHER PARTY WITHOUT THE WRITTEN CONSENT OF LPAS, INC. INFORMATION CONTAINED HEREIN IS AN INSTRUMENT OF PROFESSIONAL SERVICES AND SHALL REMAIN THE PROPERTY OF LPAS, INC. ALL RIGHTS RESERVED COPYRIGHT © 2009.

THIS DRAWING IS NOT FINAL OR TO BE USED FOR CONSTRUCTION UNTIL IT IS SIGNED BY THE ARCHITECT AND ENGINEER.

CONSULTANT

CODE AND SITE ANALYSIS

PROJECT NO: 1102-0005
DATE: 11-17-2017

SHEET NO:

A0.20

CONSTRUCTION SET

DSA 810

LOCAL FIRE AUTHORITY REVIEW

To facilitate the Division of the State Architect's (DSA) approval of the Fire/Life Safety portion of a project, DSA requires Local Fire Authority (LFA) review of certain elements as identified in this form. Use of this form is mandatory for projects that add square footage to a campus or if any item on this form is relevant to the project. For additional information, see DSA 810 Instructions and DSA Policy 09-01.

PROJECT INFORMATION

School District/Owner: MARIN COMMUNITY COLLEGE DISTRICT

Project Name/School: COLLEGE OF MARIN INDIAN VALLEY CAMPUS ORGANIC FARM CLASSROOMS

Project Address: 1800 IGNACIO BLVD., NOVATO, CA 94949

LOCAL FIRE AUTHORITY (LFA)

LFA Agency Name: Novato Fire District

LFA Reviewer Name: Lori Jessell | Title: Deputy Fire Marshall

Email: ljessell@novatofire.org | Telephone Number: 415 878-2622

I have reviewed and responded to the applicable items for this project as listed below.

***Note:** Only sign this form when it is imaged onto the site plan. A loose form is not acceptable to DSA.*

LFA Reviewer's Signature: Lori Jessell **Date:** 1/8/18

Review Key: **"Y"** = Complies with LFA requirements **"N"** = Not approved (complete Section 8) **"NA"** = Not applicable to the project **"NR"** = LFA elects not to review

	Description	Y	N	NA	NR
1	Where an elevator does not meet medical emergency service cab size, per the California Building Code (CBC), use of stairways for emergency rescue and patient transport is acceptable.			X	
2	Access roads, fire lane markings, pavers and gate entrances are in accordance with Title 19, California Code of Regulations and the California Fire Code, Chapter 5.	X			
3	Fire hydrant location and distribution complies with the California Fire Code (or see # 4).	X			
4	Fire hydrant location and distribution complies with NFPA 1142, "Alternate Means." If "NR" is checked, DSA can only approve on-site water storage as an alternate. The signature of the school district official is required to acknowledge the use of alternate means.			X	
	Signature of School District Official: [signature] **Date:** 1/10/18				
	Print the School District Official's Name: GREG Nelson				
5	The location(s) of the proposed post indicator valve and fire department connection meet the requirements of this jurisdiction.		X		
6	The location(s) of the detector check valve assembly meet the requirements of this jurisdiction.	X			
7	Is the project located in a hazard severity zone area? (CBC, Chapter 7A, Section 701A.) ☒ Yes ☐ No Check type if "Yes": ☐ Moderate ☒ High ☐ Very High ☐ WIFA (If one of these boxes is checked, the project design must meet the requirements of Chapter 7A.)				
8	COMMENTS (note deficiencies): * Fire Sprinklers required for all New buildings existing building on site is Sprinklered.				

DSA 810 (rev 05-12-14) DIVISION OF THE STATE ARCHITECT | DEPARTMENT OF GENERAL SERVICES | Page 1 of 1 STATE OF CALIFORNIA

LOCAL FIRE AUTHORITY REVIEW D10

FIRE SPINKLERS ARE NOT PROVIDED ON THIS PROJECT
FIRE SPRINKLERS ARE NOT REQUIRED PER CODE
FIRE HYDRANTS HAVE BEEN PROVIDED PER CODE
LOCAL BUILDING ORDINANCES DO NOT APPLY TO COMMUNITY COLLEGES PER TITLE 19 CALIFORNIA CODE OF REGULATIONS, DIVISION 1, CHAPTER 1, SUBCHAPTER 1, SECTION 1.07

NOTES

1. A DROP-OFF IS NOT INCLUDED IN THIS SCOPE OF WORK.
2. PATH OF TRAVEL (P.O.T.): ARCHITECT HAS SURVEYED/INSPECTED THE PATH OF TRAVEL AS INDICATED ON THE PLANS AND HAS FOUND IT TO BE, OR HAS INDICATED ON THE PLANS REMEDIAL WORK WHICH WOULD CAUSE IT TO BE A BARRIER-FREE ACCESSIBLE ROUTE:
   - AT LEAST 48" IN WIDTH, OR AS APPROVED BY CODE.
   - WITHOUT ABRUPT LEVEL CHANGES EXCEEDING 1/2" IF BEVELED AT 1:2 MAX. SLOPE, OR VERT. LEVEL CHANGES EXCEEDING 1/4"
   - WITH A FIRM, STABLE, AND SLIP RESISTANT WALKING SURFACE
   - WITH A RUNNING SLOPE OF 1:20 OR LESS, UNLESS OTHERWISE INDICATED, AND A CROSS SLOPE OF 1:50 OR LESS
   - IS FREE OF OVERHEAD OBSTRUCTIONS WITHIN 80" ABOVE THE WALKING SURFACE, AND
   - IS FREE OF OBJECTS WHICH PROTRUDE MORE THAN 4" BETWEEN THE HEIGHTS OF 27" AND 80" ABOVE THE WALKING SURFACE
3. THE PATH OF TRAVEL (P.O.T.) IDENTIFIED IN THESE CONSTRUCTION DOCUMENTS IS COMPLIANT WITH THE CURRENT APPLICABLE CALIFORNIA BUILDING CODE ACCESSIBILITY PROVISIONS FOR PATH OF TRAVEL REQUIREMENTS FOR ALTERATIONS, ADDITIONS AND STRUCTURAL REPAIRS. AS PART OF THE DESIGN OF THIS PROJECT, THE POT WAS EXAMINED AND ANY ELEMENTS, COMPONENTS OR PORTIONS OF THE POT THAT WERE DETERMINED TO BE NON-COMPLIANT 1) HAVE BEEN IDENTIFIED AND 2) THE CORRECTIVE WORK NECESSARY TO BRING THEM INTO COMPLIANCE HAVE BEEN INCLUDED WITHIN THE SCOPE OF THIS PROJECT'S WORK THROUGH DETAILS, DRAWINGS AND SPECIFICATIONS INCORPORATED INTO THESE CONSTRUCTION DOCUMENTS. ANY NON-COMPLIANT ELEMENTS, COMPONENTS OR PORTIONS OF THE POT THAT WILL NOT BE CORRECTED BY THIS PROJECT BASED ON VALUATION THRESHOLD LIMITATIONS OR A FINDING OF UNREASONABLE HARDSHIP ARE SO INDICATED IN THESE CONSTRUCTION DOCUMENTS.
DURING CONSTRUCTION, IF POT ITEMS WITHIN THE SCOPE OF THE PROJECT REPRESENTED AS CODE COMPLIANT ARE FOUND TO BE NON-CONFORMING BEYOND REASONABLE CONSTRUCTION TOLERANCES, THEY SHALL BE BROUGHT INTO COMPLIANCE WITH THE CBC AS A PART OF THIS PROJECT BY MEANS OF A CONSTRUCTION CHANGE DOCUMENT.

ACCESSIBLITY NOTES C4

●●●●● PATH OF TRAVEL (P.O.T.)
CROSS SLOPE SHALL NOT EXCEED 2%.
SEE NOTES D1 ON THIS SHEET

FIRE TRUCK TURNING RADIUS, 34'-50'

LEGEND C1

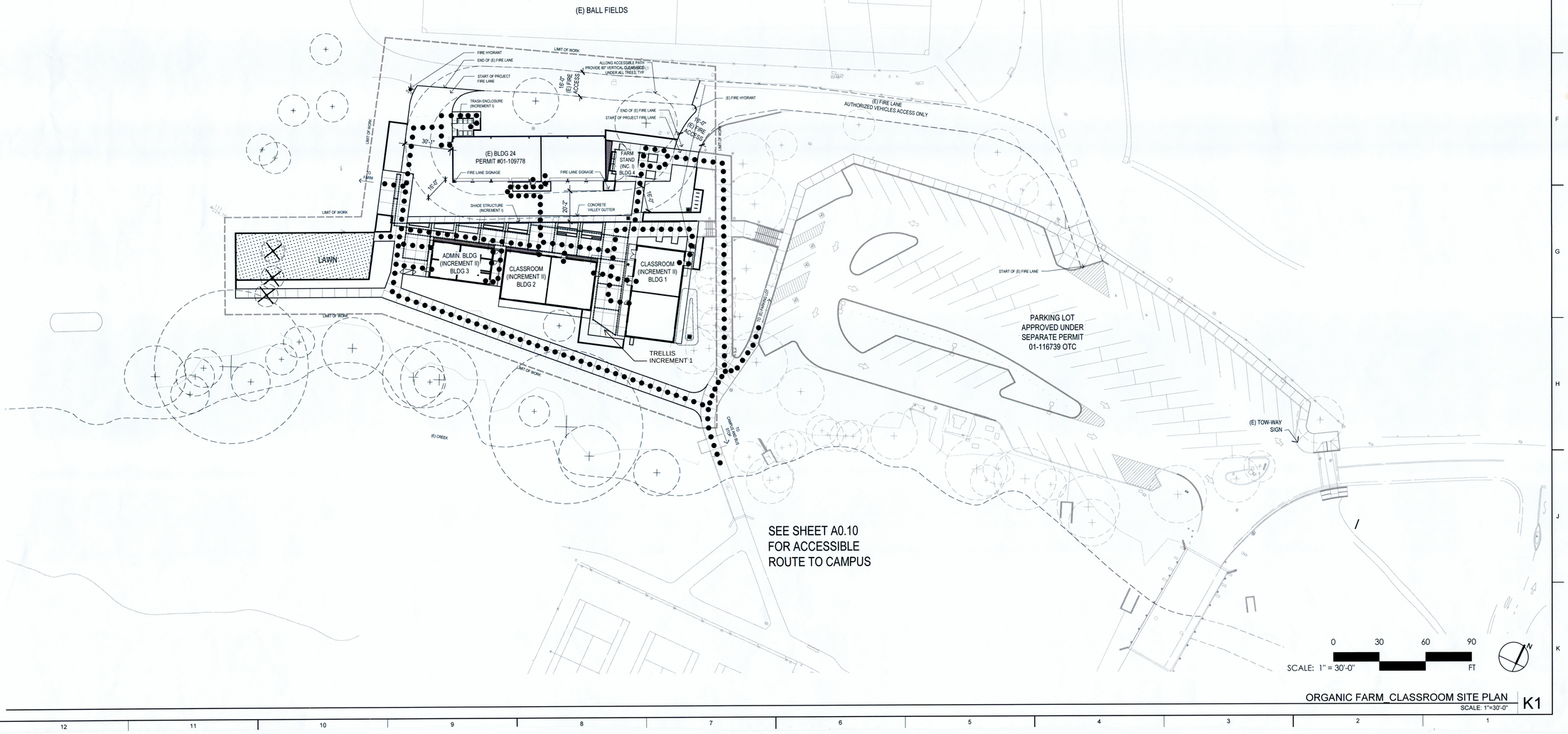

ORGANIC FARM_CLASSROOM SITE PLAN K1
SCALE: 1"=30'-0"

LPAS

2484 Natomas Park Drive Suite 100 Sacramento CA 95833
916 443 0335 lpasdesign.com **Architecture + Design**

ORGANIC FARM CLASSROOMS INCREMENT 1

INDIAN VALLEY CAMPUS
COLLEGE OF MARIN

NOVATO, CA

FOR REFERENCE ONLY

FILE NUMBER: 21-C1
IDENTIFICATION STAMP
DIVISION OF THE STATE ARCHITECT
01 - 116913 INCR: 1
AC RE FLS ED SSR CD
DATE 01/12/2018

LICENSED ARCHITECT
BRIAN D. SWANE
No. C-26116
RENEWAL DATE
STATE OF CALIFORNIA

ARCHITECT'S STAMP APPROVAL

THIS DOCUMENT CONTAINS INFORMATION THAT IS PROPRIETARY TO LPAS, INC. AND IS FURNISHED FOR THE PURPOSES OF REVIEW, BIDDING OR CONSTRUCTION OF THE PROJECT LISTED IN THE JOB TITLE BOX ABOVE AND SHALL NOT BE USED FOR ANY OTHER PURPOSE OR RELEASED TO ANY OTHER PARTY WITHOUT THE WRITTEN CONSENT OF LPAS, INC. INFORMATION CONTAINED HEREIN IS AN INSTRUMENT OF PROFESSIONAL SERVICES AND SHALL REMAIN THE PROPERTY OF LPAS, INC. ALL RIGHTS RESERVED COPYRIGHT © 2009.

THIS DRAWING IS NOT FINAL OR TO BE USED FOR CONSTRUCTION UNTIL IT IS SIGNED BY THE ARCHITECT AND ENGINEER.

CONSULTANT

SITE ACCESSIBILITY PLAN

PROJECT NO: 1102-0005
DATE: 11-17-2017

SHEET NO:

A0.30

CONSTRUCTION SET

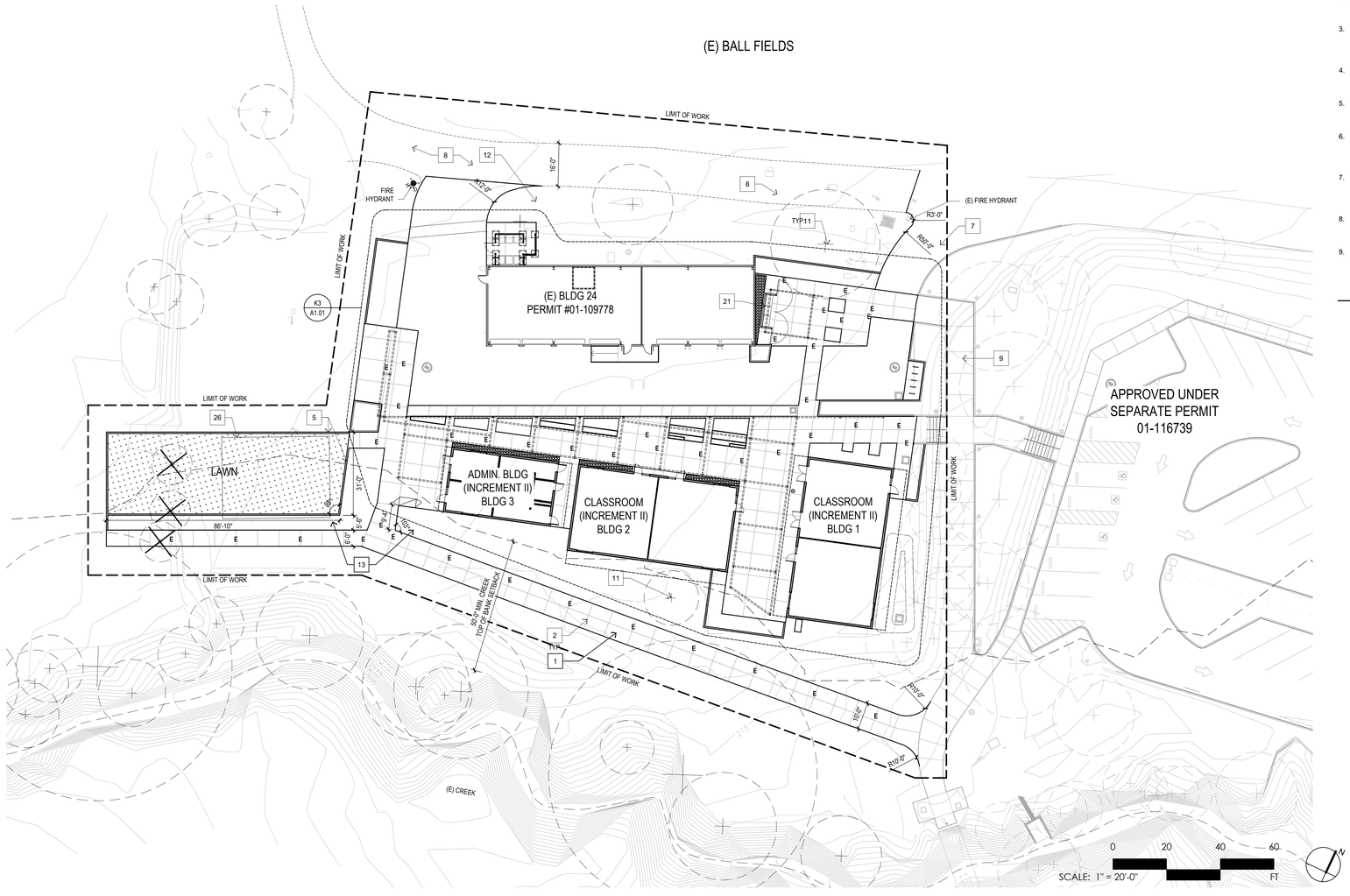

ORGANIC FARM_CLASSROOM SITE PLAN
1"=20'-0"

KEY NOTES K1

1	CONCRETE WALK WITH MEDIUM BROOM FINISH	B1 H10
2	CONTROL JOINT	D1 A1.11
3	ASPHALT PAVING, SEE 5/C4.00	
4	CONCRETE CURB, SEE 3/C4.00	
5	CONCRETE MOW STRIP	F3 A1.11
6	CONCRETE VALLEY GUTTER, SEE 6/C4.00	
7	(E) FIRE ACCESS, TO REMAIN	
8	(E) GRAVEL ROAD	
9	(E) WALK TO REMAIN	
10	TRANSFORMER, SEE ELECTRICAL E1.01	
11	(E) TREE TO REMAIN AND PROTECT IN PLACE	
12	(E) LANDSCAPE AREA	
13	LANDSCAPE PLANTING AREA	
14	DECOMPOSED GRANITE TREE PLANTER	
15	TRASH ENCLOSURE	D9 A1.11
16	CONCRETE SEAT WALL A	H1 A1.11
17	CONCRETE SEAT WALL B	H3 A1.11
18	CONCRETE SEAT WALL C	H5 A1.11
19	SHADE STRUCTURE	K1 A2.03
20	BIKE RACK	D5 A1.11
21	FARM STAND	F1 A1.25
22	FLUSH TRANSITION	B3 A1.11
23	ACCESSIBLE ENTRY	B5 A1.11
23	STORM WATER TREATMENT, SEE 1/C4.00	
24	COBBLE	D3 A1.11
25	BIKE LOCKER	F5 A1.11
26	(E) SHADE HOUSE, TO BE REMOVED	
E	EXPANSION JOINT	F1 A1.11

SITE NOTES F1

1. CONTRACTOR SHALL INFORM ARCHITECT OF ANY DISCREPANCIES BETWEEN THE PLANS AND FIELD CONDITIONS. THE WRITTEN DIMENSION SHALL SUPERSEDE THE DRAWN DIMENSION. ALL FIELD CHANGES MUST BE APPROVED BY THE ARCHITECT PRIOR TO INSTALLATION.
2. ALL DIMENSIONS ARE TO FACE OF CURB AND FACE OF WALL UNLESS OTHERWISE NOTED. ALL DIMENSIONS ARE AT 90 DEGREES OR 45 DEGREES UNLESS OTHERWISE NOTED.
3. SLEEVING SHALL BE PROVIDED AND COORDINATED BY CONTRACTOR DURING CONCRETE WORK AND WALL CONSTRUCTION. ALL SLEEVES SHALL BE SCHEDULE 40 PVC, SIZE AS NOTED. REFER TO CIVIL AND IRRIGATION PLANS FOR LOCATIONS OF SLEEVES.
4. PROVIDE A CROSS SLOPE ON ALL CONCRETE WALKS AND PAVING OF 2% MAXIMUM, 1% MINIMUM TO PROVIDE POSITIVE DRAINAGE. REFER TO CIVIL PLANS FOR MORE INFORMATION.
5. FINISH GRADE SHALL HAVE A MINIMUM OF 2% SLOPE AWAY FROM ALL WALLS AND STRUCTURES UNLESS OTHERWISE SPECIFIED. REFER TO CIVIL PLANS FOR MORE INFORMATION.
6. CONTRACTOR SHALL VERIFY LOCATION OF ALL EXISTING UNDERGROUND UTILITIES AND STRUCTURES PRIOR TO ANY EXCAVATION. CONTRACTOR SHALL REPAIR ANY DAMAGE TO UTILITIES CAUSED BY HIS WORK AT NO ADDITIONAL COST TO THE OWNER.
7. WHERE CONTRACTOR'S WORK INTERFACES WITH EXISTING IMPROVEMENTS, CARE SHALL BE TAKEN TO AVOID DAMAGING EXISTING LANDSCAPING, IRRIGATION AND UTILITIES. ANY DAMAGE TO EXISTING CONDITIONS SHALL BE REPAIRED WITHIN 48 HOURS AT NO ADDITIONAL COST TO THE OWNER.
8. CONTRACTOR IS RESPONSIBLE FOR ADJUSTING THE ELEVATIONS OF ALL NEW AND EXISTING UTILITY VAULTS, BOXES, MANHOLES, AND OTHER STRUCTURES TO NEW FINISH GRADE.
9. REFER TO SPECIFICATIONS FOR MORE INFORMATION.

LPAS
2484 Natomas Park Drive Suite 100 Sacramento CA 95833
916 443 0335 lpasdesign.com Architecture + Design

ORGANIC FARM CLASSROOMS INCREMENT 1

INDIAN VALLEY CAMPUS
COLLEGE OF MARIN

NOVATO, CA

FOR REFERENCE ONLY

FILE NUMBER: 21-C1
IDENTIFICATION STAMP
DIVISION OF THE STATE ARCHITECT
01 - 116913 INCR: 1
AC RE FLS ED SSR CD
DATE 01/12/2018

LICENSED ARCHITECT CURTIS A. OWYANG No. C-29512 REGISTERED DATE STATE OF CALIFORNIA

ARCHITECT'S STAMP APPROVAL

THIS DOCUMENT CONTAINS INFORMATION THAT IS PROPRIETARY TO LPAS, INC. AND IS FURNISHED FOR THE PURPOSES OF REVIEW, BIDDING OR CONSTRUCTION OF THE PROJECT LISTED IN THE JOB TITLE BOX ABOVE AND SHALL NOT BE USED FOR ANY OTHER PURPOSE OR RELEASED TO ANY OTHER PARTY WITHOUT THE WRITTEN CONSENT OF LPAS, INC. INFORMATION CONTAINED HEREIN IS AN INSTRUMENT OF PROFESSIONAL SERVICES AND SHALL REMAIN THE PROPERTY OF LPAS, INC. ALL RIGHTS RESERVED COPYRIGHT © 2009.

THIS DRAWING IS NOT FINAL OR TO BE USED FOR CONSTRUCTION UNTIL IT IS SIGNED BY THE ARCHITECT AND ENGINEER.

CONSULTANT

OVERALL SITE PLAN

PROJECT NO: 1102-0005
DATE: 11-17-2017

SHEET NO:

A1.00

CONSTRUCTION SET

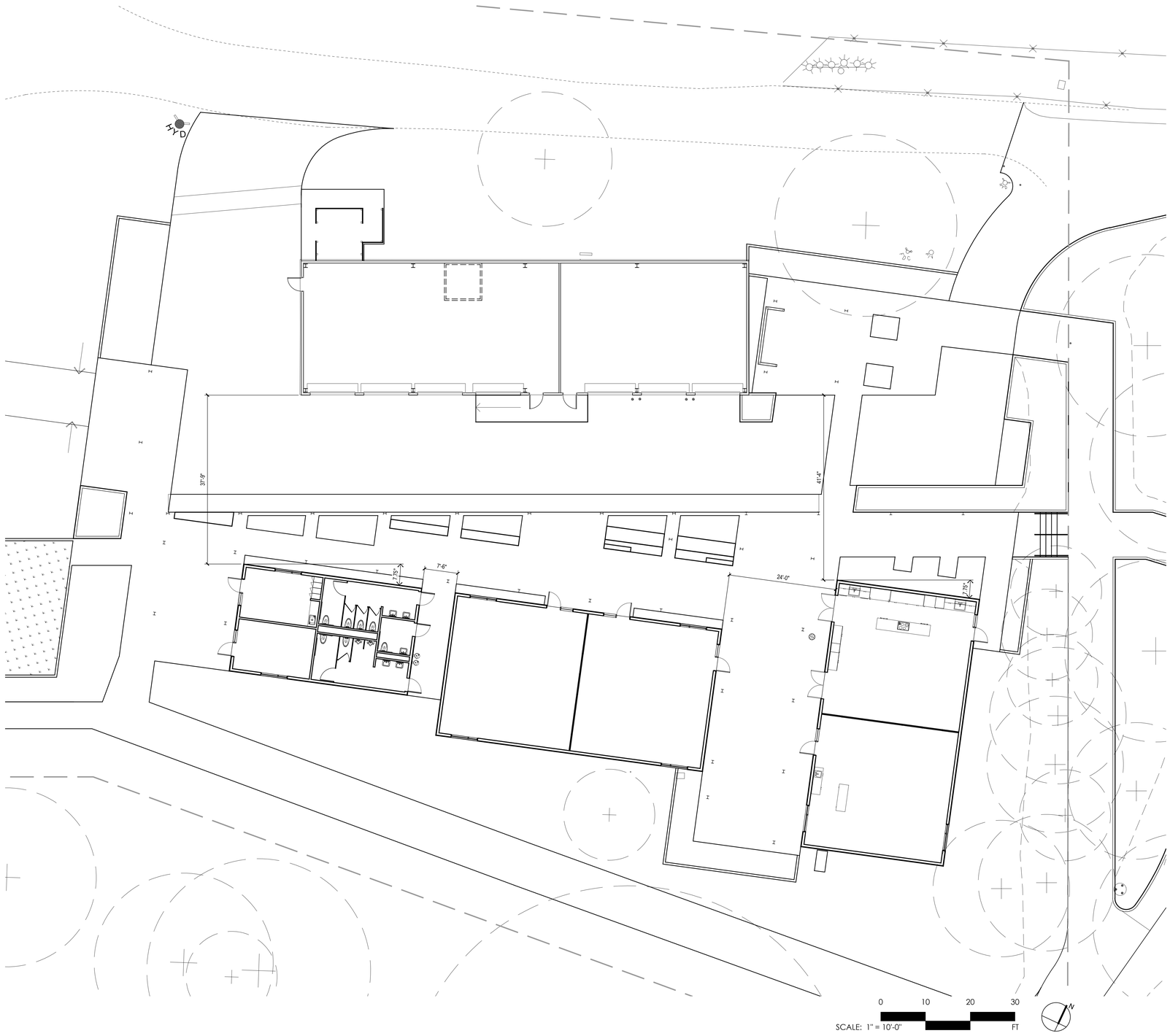

ENLARGED SITE PLAN K1
1"=10'-0"

LPAS
2484 Natomas Park Drive Suite 100 Sacramento CA 95833
916 443 0335 lpasdesign.com Architecture + Design

ORGANIC FARM CLASSROOMS INCREMENT 2

INDIAN VALLEY CAMPUS
COLLEGE OF MARIN

NOVATO, CA

ARCHITECT'S STAMP APPROVAL

THIS DOCUMENT CONTAINS INFORMATION THAT IS PROPRIETARY TO LPAS, INC. AND IS FURNISHED FOR THE PURPOSES OF REVIEW, BIDDING OR CONSTRUCTION OF THE PROJECT LISTED IN THE JOB TITLE BOX ABOVE AND SHALL NOT BE USED FOR ANY OTHER PURPOSE OR RELEASED TO ANY OTHER PARTY WITHOUT THE WRITTEN CONSENT OF LPAS, INC. INFORMATION CONTAINED HEREIN IS AN INSTRUMENT OF PROFESSIONAL SERVICES AND SHALL REMAIN THE PROPERTY OF LPAS, INC. ALL RIGHTS RESERVED COPYRIGHT © 2009.

THIS DRAWING IS NOT FINAL OR TO BE USED FOR CONSTRUCTION UNTIL IT IS SIGNED BY THE ARCHITECT AND ENGINEER.

CONSULTANT

ENLARGED SITE PLAN

PROJECT NO: 1102-0005
DATE: 11-17-2017

SHEET NO:

A1.02

CONSTRUCTION SET

GENERAL SHEET NOTES

A. FIRE ALARM SYSTEM INSTALLATION SHALL COMPLY WITH ALL REQUIREMENTS OF APPLICABLE CODES, STANDARDS AND STATE REGULATIONS.

B. FIRE ALARM CIRCUITS AND CIRCUIT ROUTING ARE SHOWN SCHEMATICALLY FOR CLARITY ILLUSTRATING THE WIRING CONFIGURATION NECESSARY FOR PROPER CIRCUIT SUPERVISION.

C. COORDINATE CEILING MOUNTED FIRE ALARM DEVICE LOCATIONS WITH NEW LIGHT FIXTURES TO AVOID CONFLICTS.

D. INSTALL FIRE ALARM CONDUCTORS IN CONDUIT. ROUTE CONDUIT CONCEALED ABOVE CEILINGS AND/OR IN WALLS WHENEVER POSSIBLE. MINIMUM SIZE OF CONDUIT SHALL BE 3/4".

E. REFER TO RISER DIAGRAM FA2.1.1 DETAIL A FOR ADDITIONAL REQUIREMENTS.

F. ALL EQUIPMENT, DEVICES AND CIRCUITRY SHOWN ON THIS SHEET ARE NEW, UON.

G. EXTERIOR CONDUIT AND ROUTING SHOWN ON SHEET E1.01.

NUMBERED SHEET NOTES

1. NEW FIRE ALARM BOOSTER PANEL. ELECTRICAL CONTRACTOR SHALL PROVIDE 120V DEDICATED CIRCUIT WITH A RED LOCKING CIRCUIT BREAKER IN NEAREST ELECTRICAL PANELBOARD.
2. TO EXISTING FIRE ALARM CONTROL PANEL IN BUILDING 24. EXACT LOCATION SHOWN ON SHEET E1.01.
3. TO BUILDING #2 FIELD DEVICES. CONDUITS SIZES SHOWN ON SHEET E1.01, TYP.
4. FROM BUILDING #1 FIELD DEVICES.
5. TO BUILDING #3 FIELD DEVICES.
6. FROM BUILDING #2 FIELD DEVICES.

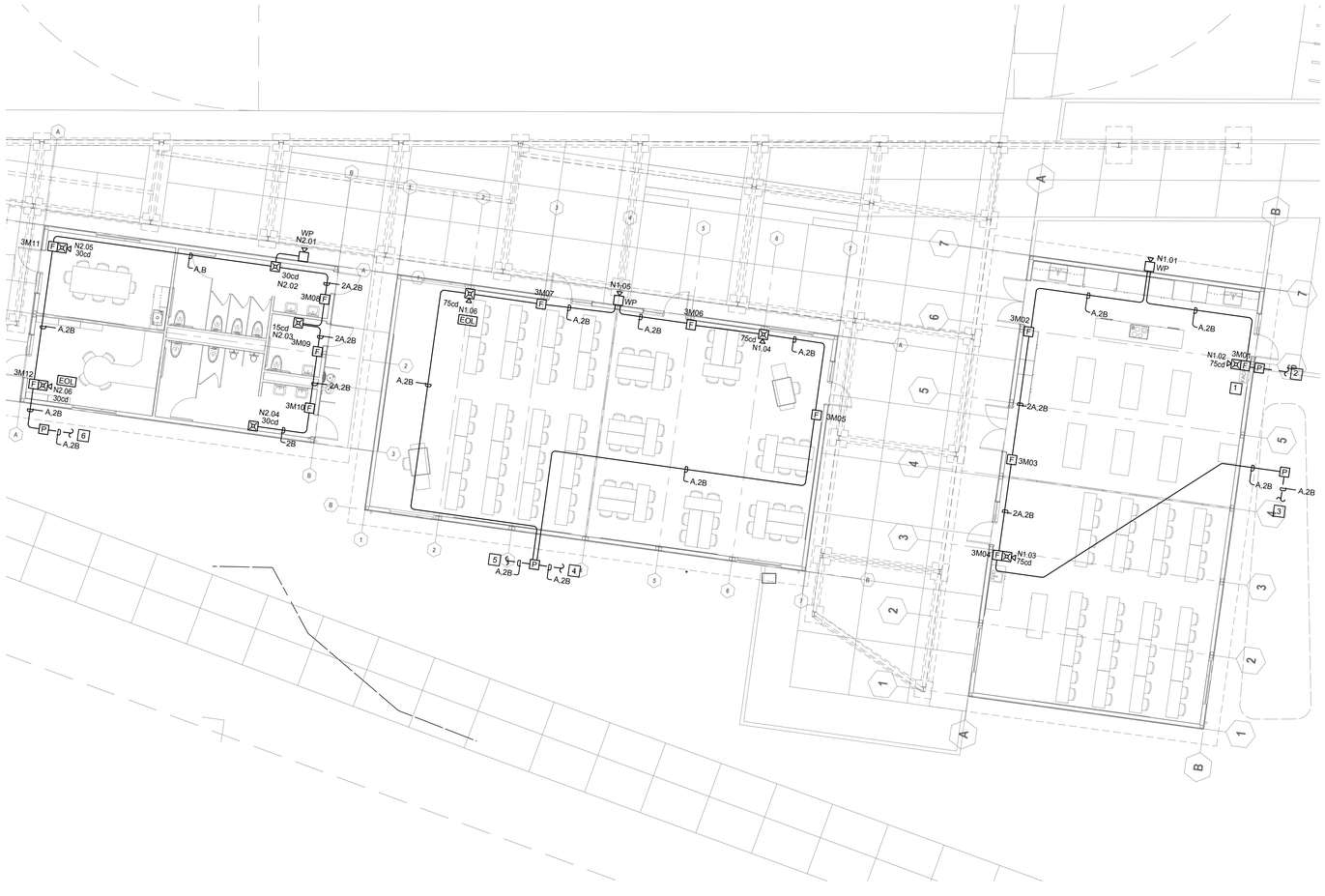

A E3.01 BUILDING 1, 2, & 3 FIRE ALARM PLAN

SCALE:1/8" = 1'-0"

LPAS

2484 Natomas Park Drive Suite 100 Sacramento CA 95833
916 443 0335 lpasdesign.com Architecture + Design

ORGANIC FARM CLASSROOMS INCREMENT 2

INDIAN VALLEY CAMPUS
COLLEGE OF MARIN

NOVATO, CA

ARCHITECT'S STAMP APPROVAL

THIS DOCUMENT CONTAINS INFORMATION THAT IS PROPRIETARY TO LPAS, INC. AND IS FURNISHED FOR THE PURPOSES OF REVIEW, BIDDING OR CONSTRUCTION OF THE PROJECT LISTED IN THE JOB TITLE BOX ABOVE AND SHALL NOT BE USED FOR ANY OTHER PURPOSE OR RELEASED TO ANY OTHER PARTY WITHOUT THE WRITTEN CONSENT OF LPAS, INC. INFORMATION CONTAINED HEREIN IS AN INSTRUMENT OF PROFESSIONAL SERVICES AND SHALL REMAIN THE PROPERTY OF LPAS, INC. ALL RIGHTS RESERVED COPYRIGHT © 2009.

THIS DRAWING IS NOT FINAL OR TO BE USED FOR CONSTRUCTION UNTIL IT IS SIGNED BY THE ARCHITECT AND ENGINEER.

CONSULTANT

The Engineering Enterprise
Consulting Engineers
1125 HIGH STREET
AUBURN, CA 95603
(530) 886-8556

REGISTERED PROFESSIONAL ENGINEER
SCOTT WHEELER
No. E015491
Exp. 06/30/19
CIVIL
STATE OF CALIFORNIA

BLDG 1, 2, & 3 FIRE ALARM PLAN

PROJECT NO: 1102-0005
DATE: 11-17-2017

SHEET NO:

E3.01

CONSTRUCTION SET

FIRE ALARM SYSTEM OPERATING MATRIX

RESULT OF OPERATION	PULL STATION	HEAT DETECTOR	DUCT DETECTOR	SMOKE DETECTOR	SYSTEM RESET	SIGNAL SILENCE	OPEN CIRCUIT, SHORT, ETC.	POWER LOSS	SPRINK. VALVE TAMPER	WATER FLOW ALARM	MULTI-CRITERIA DETECTOR
FACP ALARM	X	X		X						X	X
ANNUNCIATE ALARM	X	X		X						X	X
OFF SITE REPORTING ALARM	X	X	X	X					X	X	X
FACP TROUBLE						X	X	X		X	
ANNUNCIATE TROUBLE			X			X	X	X			
OFF SITE REPORTING TROUBLE						X	X	X	X		
AUDIBLE ALARM	X	X		X						X	X
VISUAL ALARM	X	X		X						X	X
SUPERVISING STATION	X	X	X	X			X		X		X
HVAC SHUTDOWN			X								
DEACTIVATE AUDIBLES					X	X					
DEACTIVATE VISUALS					X	X					
SYSTEM NORMAL					X						
ACTIVATE FIRE SPRINKLER BELL										X	
CO2 DETECTED SOUNDER BASE											X

FIRE ALARM SYSTEM CABLE SCHEDULE

CABLE TAG	CABLE	NO. OF CONDUCTORS	COLOR	AWG	CABLE USE
A	GENESIS	2(1PR)	RED/BLACK	#18	BUILDING INITIATION
B	GENESIS	2(1PR)	RED/BLACK	#12	NOTIFICATION
C	GENESIS	2(1PR)	RED/BLACK	#18	MONITORED CIRCUIT
D	AQUA SEAL	2(1PR)	RED/BLACK	#18	UG INITIATION
E	AQUA SEAL	2(1PR)	RED/BLACK	#12	UG NOTIFICATION

[#] NUMBERED SHEET NOTES

1. MOUNT DOOR HOLDER SMOKE DETECTOR MAXIMUM 3' FROM DOOR AND A MINIMUM OF 1'.
2. MAXIMUM DISTANCE BETWEEN SMOKE DETECTORS IS 30' AND 15' FROM WALLS, MAXIMUM DISTANCE FROM A CORNER IS 21' WITH CEILING LESS 10' OR LESS.
3. MOUNT SMOKE DETECTOR MINIMUM OF 3' AWAY FROM DIFFUSER VENT.
4. MOUNT SMOKE DETECTOR FOR FIRE SMOKE DAMPER (FSD) WITHIN 3' OF SUPPLY VENT.
5. DUCT SMOKE DETECTOR SHALL BE MOUNTED 6 TO 10 TIMES THE DIAMETER OF DUCT FROM BEND OR OBSTRUCTION.
6. WHERE DUCT SMOKE DETECTORS ARE INSTALLED IN CONCEALED LOCATIONS OR GREATER THAN 10' AFF, DETECTORS SHALL BE PROVIDED WITH A REMOTE INDICATOR OR SUPERVISORY INDICATION ACCEPTABLE WITH AUTHORITY HAVING JURISDICTION (AHJ). ALL HVAC GREATER THAN 2000cfm SHALL HAVE A DUCT DETECTOR IN THE SUPPLY AIR DUCT. GREATER THAN 15,000cfm SHALL HAVE ONE IN BOTH SUPPLY AND RETURN AIR DUCTS. HOWEVER SHALL NOT BE REQUIRED WHERE THE ENTIRE SPACE SERVED BY THE AIR DISTRIBUTION SYSTEM IS PROTECTED BY SMOKE DETECTORS.
7. BEAM POCKET SPOT DETECTOR ARE REQUIRED FOR BEAMS GREATER THAN 18" BELOW CEILING AND SPACED MORE THAN 8' ON CENTER. EACH BAY FORMED BY BEAM SHALL BE TREATED AS A SEPARATE AREA. BEAMS LESS THAN 12" IN DEPTH AND SPACED LESS THAN 8' ON CENTER SHALL HAVE DETECTORS INSTALLED ON THE BOTTOM OF THE BEAM.
   - 7.1. OR, CEILINGS WITH BEAM DEPTHS LESS THAN 10 PERCENT OF THE CEILING HEIGHT, SMOOTH CEILING SPACING IS PERMITTED AND DETECTORS PLACED ON THE BOTTOM OF THE BEAM.
   - 7.2. BEAMS EQUAL TO OR GREATER THAN 10 PERCENT OF CEILING HEIGHT WITH BEAM SPACING GREATER THAN 40 PERCENT OF CEILING HEIGHT, SPOT DETECTORS SHALL BE LOCATED IN EACH CELL. NFPA 72 17.7.3.2.4.2
8. BEAMS PROJECTING LESS THAN 4" SHALL BE TREATED AS A SMOOTH CEILING.
9. SMOKE DETECTORS SHALL BE MOUNTED ON THE CEILING MINIMUM 4" FROM WALL, AND 4" MINIMUM TO 12" MAXIMUM FROM CEILING MOUNTED ON WALL.
10. MOUNT MANUAL PULL STATIONS AT 48" TO ACTIVATING CONTROL AFF, AND NO GREATER THAN 5' FROM DOOR.
11. MOUNT EXTERNAL HORN AT 90" MINIMUM AND 100" MAXIMUM TO THE TOP OF THE DEVICE.
12. FOR APPLICATIONS WHERE THE STRUCTURE IS BELOW 90", MOUNT HORN AS HIGH AS WITH A MINIMUM OF 6" CLEARANCE TOT HE TOP OF THE DEVICE.
13. MOUNT HORN / SPEAKER STROBE AND STROBE ONLY THE THE ENTIRE LENS IS WITHIN 80" AND 96" AFF.
14. MOUNT FIRE ALARM CONTROL PANELS AND ANNUNCIATORS AT A MAXIMUM OF 48" TO THE TOP OF THE CONTROL PANEL OR KEY BOARDS. CBC 1117B.0 (3).
15. CEILING MOUNTED HORN / SPEAKER STROBE
16. MONITOR MODULE
17. RATE ANTICIPATOR HEAT DETECTOR, MOUNTED IN ABOVE CEILING / ATTIC SPACE.
18. APPROVED WIRE MANAGEMENT, ie J-HOOK OR D-RING.
19. ABOVE CEILING CIRCUITS ROUTING IN AN ACCESSIBLE ATTIC SPACE.
20. NON-ACCESSIBLE CEILINGS MUST USE EITHER EMT OR APPROVED WIREMOLD RACEWAY, AS SHOWN ON PLANS.
21. MULTI-CRITERIA PHOTOELECTRIC SMOKE / CO DETECTOR WITH SOUNDER BASE. MOUNT IN AREAS WHERE FOSSIL FUEL IS USED.
22. SMOKE / HEAT DETECTION COVERAGE IS REQUIRED IN ALL COMBUSTIBLE AREAS, UNLESS:
    - 22.1. CEILING IS ATTACHED DIRECTLY TO T HE UNDERSIDE OF THE SUPPORTING BEAM OR ROOF DECK.
    - 22.2. CONCEALED SPACE IS ENTIRELY FILLED WITH NON-COMBUSTIBLE INSULATION.
    - 22.3. THE SMALL CONCEALED SPACE OVER ROOMS THAT DO NOT EXCEED 50 SQ. FT. IN AREA.
    - 22.4. SPACES FORMED BY FACING STUDS OR SOLID JOISTS IN WALLS, FLOORS, OR CEILINGS WHERE THE FACING STUD OR SOLID JOIST IS LESS THAN 6".

    INACCESSIBLE SPACES THAT DO NOT MEET THIS CRITERIA MUST BE MADE ACCESSIBLE AND DETECTION MUST BE INSTALLED. NFPA72 17.5.3.1.1
23. DETECTION FOR CONCEALED ACCESSIBLE SPACES ABOVE SUSPENDED CEILING USED AS A RETURN PLENUM SHALL BE PROVIDED AT EACH CONNECTION FROM RETURN AIR PLENUM AT CENTRAL AIR HANDLING UNIT. NFPA 72 17.5.3.1.4
24. WITH EVERY NEW FIRE ALARM SYSTEM A DOCUMENTATION CABINET SHALL BE INSTALLED AT THE FIRE ALARM CONTROL PANEL OR AT ANOTHER LOCATION APPROVED BY AHJ. THE CABINET SHALL BE PROMINENTLY LABELED "SYSTEM RECORD DOCUMENTS".

FIRE ALARM SYSTEM COMPONENT SCHEDULE

SYMBOL	EQUIPMENT/DEVICE	MANUFACTURER	MODEL / PART #	CSFM LISTING YEAR	CSFM LISTING NO.
FACP (E)	FIRE ALARM CONTROL PANEL	SIMPLEX	----------	----------	----------
BP-X	FIRE ALARM BOOSTER PANEL	SIMPLEX		06/30/2018	
F	PULL STATION	SIMPLEX		6/30/2018	
HXXcd 15/30/75/110	HORN/STROBE # INDICATES CANDELLA SETTING AS REQ.	SIMPLEX		6/30/2018	
SXXcd 15/30/75/110	STROBE # INDICATES CANDELLA SETTING AS REQ.	SIMPLEX		6/30/2018	
d WP	WEATHER PROOF SPEAKER	SIMPLEX		6/30/2018	

NOTE: QUANTITIES OF DEVICES SHOWN ON THIS SCHEDULE ARE ESTIMATED DEVICES INSTALLED. THE CONTRACTOR IS RESPONSIBLE FOR REPLACEMENT OF ALL COMPONENTS SHOWN ON FLOOR PLANS. THESE QUANTITIES, DO NOT INCLUDE SPARE DEVICES. REFER TO SPECIFICATIONS FOR SPARE DEVICE QUANTITIES.

SLC-3 Calculations

Fire Alarm Control Panel: PANEL A SLC Location: MAIN CAMPUS

Signaling Line Circuit Loading			DEVICE		SUBTOTAL	
Qty	Device		Super.	Alarm	Super.	Alarm
1	FIRE ALARM CONTROL PANEL					
12	MANUAL PULL STATION		0.30	3.00	3.60	36.00
	PHOTOELECTRIC SMOKE DETECTOR*		0.30	6.50		
	HEAT DETECTOR*		0.30	6.50		
14	DUCT SMOKE DETECTORS		0.30	6.50	4.20	91.00
	MONITORING MODULE		0.38	5.00		
	RELAY MODULE		0.38	6.50		
	FIBER LOOP MODULE		53.00	53.00		
	DIGITAL ALARM TRANSMITTER		18.00	18.00		
	POWER SUPPLY, PM9		50.00	50.00		
1	SLC CARD		81.00	150.00	81.00	150.00
	VOICE GATEWAY		150.00	150.00		
	50W - 70V AMPLIFIER (Amp 1: 25W, Amp 2: 25W Speaker Loads)		81.00	81.00		
	KEYPAD DISPLAY		24.00	28.00		
	REPEATER MODULE		16.00	17.00		
		Signaling Line Circuit Load			88.80	277.00
	Spare/Future Capacity - 20%	0.20				55.40

Notification Circuit Loading: N/A

DEVICE	cd	LOAD/EA	NAC1	NAC2	NAC3	NAC4	NAC5	NAC6	TOTAL
Notification Appliance Circuit Loading									

Notification Circuit Voltage Drop: N/A

CIRCUIT ID	CIRCUIT CURRENT (AMPS)	DISTANCE (FEET)	AWG	%VD	VD

Battery Calculation

	Super.	Alarm
Totals Panel Current (mA):	88.80	421.20
Total Panel Current (Amps):	0.09	0.42
Hours in Standby:	24	
Standby Amp Hours:	2.13	
Minutes in Alarm:		30
Total Alarm Amp Hours:		0.21
Minumum Battery Capacity Required:		2.34 AH

Provide 9ah capacity battery

Panel Loading

Panel Capacity (Amps): 9.00
Panel Load (Amps): 0.42

ALL LOADS ARE EXPRESSED AS mA UNLESS OTHERWISE NOTED

BP-B Calculations

Power Supply: BP-N Location: BUILDING #1

Notification Circuit Loading

DEVICE	cd	LOAD/EA	NAC1	NAC2	NAC3	NAC4	NAC	NAC	TOTAL
HORN STROBE	15	71.00							
HORN STROBE	30	96.00		2					192.00
HORN STROBE	75	153.00	4						612.00
HORN STROBE	110	195.00							
STROBE	15	71.00		1					71.00
STROBE	30	96.00		2					192.00
STROBE	75	153.00							
STROBE	110	195.00							
HORN		40.00	2	1					120.00
CEILING HORN STROBE	95	220.00							
CEILING HORN STROBE	115	290.00							
CEILING HORN STROBE	150	321.00							
Notification Appliance Circuit Loading:		692.00	495.00						1,187.00
Spare/Future Capacity - 20%		0.20							237.40

Notification Circuit Voltage Drop

CIRCUIT ID	CIRCUIT CURRENT (AMPS)	DISTANCE (FEET)	AWG	%VD	VD
NAC1	0.69	90	#12	0.86%	0.21
NAC2	0.50	150	#12	1.02%	0.25
NAC3					
NAC4					
NAC					
NAC					

Battery Calculation

	Super.	Alarm
Totals Panel Current (mA):		1424.40
Total Panel Current (Amps):		1.42
Hours in Standby:	24	
Standby Amp Hours:		
Minutes in Alarm:		30
Total Alarm Amp Hours:		0.71
Minumum Battery Capacity Required:		0.71 AH

Provide a 7ah capacity battery

Panel Loading

Panel Capacity (Amps): 6.00
Panel Load (Amps): 1.42

ALL LOADS ARE EXPRESSED AS mA UNLESS OTHERWISE NOTED

C E3.02 PARTIAL FIRE ALARM BATTERY CALCULATIONS

NTS

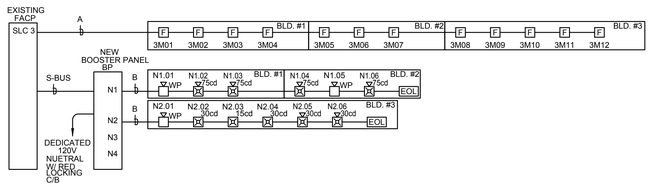

B E3.02 PARTIAL FIRE ALARM RISER DIAGRAM

NTS

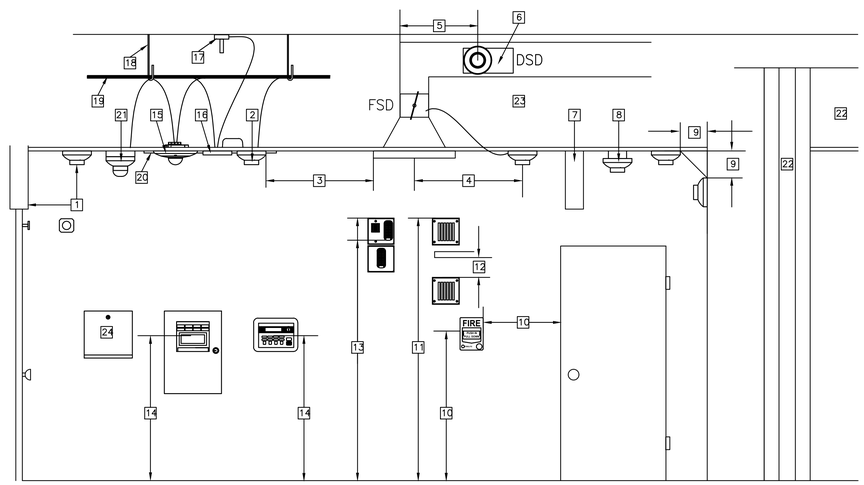

A E3.02 TYPICAL FIRE ALARM DEVICE INSTALLATION REQUIREMENTS

NTS

FIRE ALARM NOTES

1. WORK SHALL BE PERFORMED IN ACCORDANCE WITH THE APPLICABLE REGULATIONS,INCLUDING BUT NOT LIMITED TO THE FOLLOWING:

   STATE CALIFORNIA CODE OF REGULATIONS (CCR) 2016 TITLE 24 CALIFORNIA BUILDING CODE
   PART 2, 2013 CALIFORNIA BUILDING CODE (CBC), 2016 IBC.
   PART 3, 2013 CALIFORNIA ELECTRICAL CODE (CEC), 2016 NEC.
   PART 4, 2013 CALIFORNIA MECHANICAL CONDE (CMC), 2016 UMC.
   PART 5, 2013 CALIFORNIA PLUMBING CODE (CPC), 2016 UPC.
   PART 9, 2013 CALIFORNIA FIRE CODE (CFC) BASED 0N 2016 IFC.
   2016 NATIONAL FIRE PROTECTION ASSOCIATION (NFPA) 13, 72, 80, 90A, 99, AND 101.
2. INSTALLATION OF THE SYSTEMS SHALL NOT BE STARTED UNTIL DETAILED DESIGN DOCUMENTATION AND SPECIFICATIONS, INCLUDING STATE FIRE MARSHALL LISTING SHEETS FOR EACH COMPONENT OF THE SYSTEM HAS BEEN APPROVED BY DSA.
3. UPON COMPLETION OF INSTALLATION OF THE SYSTEMS, A SATISFACTORY TEST OF THE ENTIRE SYSTEM SHALL BE MADE IN THE PRESENCE OF A DSA PROJECT INSPECTOR.
4. A STAMPED SET OF APPROVED FIRE ALARM DESIGN DOCUMENTS SHALL BE ON THE JOB SITE AND USED FOR INSTALLATION.
5. ANY DISCREPANCIES BETWEEN THE DRAWINGS AND THE CODE OR RECOGNIZED STANDARDS SHALL BE BROUGHT TO THE ATTENTION OF DSA AND THE ARCHITECT/ENGINEER OF RECORD.
6. DSA, ARCHITECT/ENGINEER AND OWNER SHALL BE NOTIFIED A MINIMUM OF 48 HOURS PRIOR TO THE FINAL INSPECTION AND/ OR TESTING.
7. ALL PENETRATIONS THROUGH RATED ASSEMBLIES, REQUIRING OPENING PROTECTION SHALL BE PROVIDED WITHIN THE SPECIFICATION WITHIN THE FIRE ALARM SECTION.
8. AUDIBLE DEVICES SHALL PROVIDE A SOUND PRESSURE LEVEL OF 15DECIBLES (Dba) ABOVE THE AVERAGE AMBIENT SOUND LEVEL OR 5 Dba ABOVE THE MAXIMUM SOUND LEVEL HAVING A DURATION AT LEAST 60 SECONDS, WHICHEVER IS GREATER, IN EVERY OCCUPIED SPACE WITHIN THE BUILDING.
9. AUDIBLE DEVICES SHALL BE SYNCHRONIZED TEMPORAL CODE 3 PATTERN.
10. THE CONTRACTOR SHALL ADJUST/INSTALL DEVICES TO MAXIMIZE PERFORMANCE AND TO MINIMIZE FALSE ALARMS.
11. VISUAL DEVICES SHOULD NOT EXCEED 2 FLASHES PER SECOND AND SHOULD NOT BE SLOWER THAN 1 FLASH EVERY SECOND. THE DEVICE SHALL HAVE A PULSING LIGHT SOURCE NOT LESS THAN 15 CANDELLA. VISUAL DEVICES WITHIN 55' FROM EACH OTHER SHALL BE SYNCHRONIZED.
12. UNDERGROUND AND EXTERIOR CONDUIT TO HAVE WATERTIGHT FITTINGS AND WIRE TO BE APPROVED FOR WET LOCATIONS.
13. ALL FIRE ALARM WIRING SHALL BE FLP OR FPLP (FIRE POWER LIMITED OR FIRE POWER LIMITED PLENUM) AS REQUIRED FOR APPLICATION. WIRING IN CONDUIT ABOVE GROUND MAY BE THHN OR THWN.
14. PER CEC STANDARDS, ALL WIRING IS TO BE PULLED THROUGH EACH JUNCTION BOX AND CONNECTED DIRECTLY TO EACH FIRE DEVICE. DO NOT SPLICE THE WIRE. ALL BOXES TO BE SIZED PER CEC.
15. ALL FIRE ALARM CIRCUITS ARE TO BE IN CONDUIT, SURFACE RACEWAY OR OPEN RUN ABOVE THE CEILINGS, UNDER FLOORS AND IN WALLS IN A NEAT AND PROTECTED MANNER AS INDICATED ON THE DESIGN DOCUMENTS. EXPOSED CIRCUITS ARE ONLY PERMITTED WHEN NOTED AS EXPOSED ON DESIGN DOCUMENTS.
16. FIRE ALARM PANEL, REMOTES, AND COMPONENTS SHALL BE SECURED TO MOUNTING SURFACES PER MANUFACTURERS SPECIFICATIONS: NO DEVICE SHALL EXCEED THE WEIGHT OF 20 LBS. WITHOUT SPECIAL MOUNTING DETAILS.
17. A DEDICATED BRANCH CIRCUIT SHALL BE PROVIDED FOR FIRE ALARM EQUIPMENT. THIS CIRCUIT SHALL BE ENERGIZED FROM A COMMON USE AREA PANEL AND SHALL HAVE OTHER OUTLETS. THE BREAKER SHALL HAVE A RED LOCKING DEVICE TO BLOCK THE HANDLE IN THE "ON" POSITION. THE CIRCUIT BREAKER SHALL BE LABELED "FIRE ALARM CIRCUIT CONTROL". CIRCUIT ID TO BE LABELED AT FIRE PANEL/EXPANDERS.
18. THE INSTALLER CONTRACTOR SHALL PROVIDE A RECORD OF COMPLETION PER NFPA 72, FIGURE 10.18.2.1.1.
19. THE INSTALLING CONTRACTOR SHALL PROVIDE SYSTEM PROGRAMMING FOR SUPERVISORY MONITORING PER CBC SECTION 901.6.2.
20. SUPERVISORY MONITORING SHALL BE TESTED AND VERIFIED AS SENDING CORRECT SIGNALS IN CONJUNCTION WITH FINAL ACCEPTANCE TEST.
21. OWNER SHALL BE RESPONSIBLE FOR ESTABLISHING A FIRE SYSTEM MONITORING CONTRACT OR PROVISIONS. AUTOMATIC FIRE ALARM SYSTEMS SHALL TRANSMIT THE ALARM, SUPERVISORY AND TROUBLE SIGNALS TO AN APPROVED SUPERVISING STATION AS REQUIRED BY NFPA 72 AND CBC 907.6.5.2. THE SUPERVISING STATION SHALL BE LISTED AS EITHER UUFX OR UUIS BY UL OR SHALL MEET THE REQUIREMENTS OF FM STANDARD 3011.
22. BEFORE REQUESTING FINAL APPROVAL OF THE INSTALLATION THE INSTALLING CONTRACTOR SHALL FURNISH A WRITTEN STATEMENT TO THE DSA PROJECT INSPECTOR TO THE EFFECT THAT THE SYSTEM HAS BEEN INSTALLED AND TESTED IN ACCORDANCE WITH THE (2013) NFPA 72 SECTION 14.4.1.
23. TEST, INSPECTION AND MAINTENANCE SHALL COMPLY WITH NFPA 72 CHAPTER 14 REQUIREMENTS.

FIRE ALARM SYSTEM DESCRIPTION

SCOPE OF THIS PROJECT IS TO INCORPORATE A NEW FIRE ALARM SYSTEM. INITIATION, NOTIFICATION AND CONTROL DEVICES AS SHOWN ON PLANS AND SPECIFICATIONS. IN AREAS WHERE SCOPE OF NEW WORK IS LIMITED TO INSTALLATION OF FIRE ALARM DEVICES, INFRASTRUCTURE, INCLUDING PATHWAY, DEVICE BOXES, ETC. PROVIDE ALL NEW CABLING; CABLING SHALL BE INSTALLED IN CONDUIT OR SURFACE RACEWAY, OR EXPOSED IN ACCESSIBLE CEILING SPACE.

FIRE ALARM SYSTEM: CLASS B
IDC: CLASS B
SLC CIRCUIT: CLASS B
NOTIFICATION CIRCUIT: CLASS B

LPAS

2484 Natomas Park Drive Suite 100 Sacramento CA 95833
916 443 0335 lpasdesign.com Architecture + Design

ORGANIC FARM CLASSROOMS INCREMENT 2

INDIAN VALLEY CAMPUS
COLLEGE OF MARIN

NOVATO, CA

ARCHITECT'S STAMP APPROVAL

THIS DOCUMENT CONTAINS INFORMATION THAT IS PROPRIETARY TO LPAS, INC. AND IS FURNISHED FOR THE PURPOSES OF REVIEW, BIDDING OR CONSTRUCTION OF THE PROJECT LISTED IN THE JOB TITLE BOX ABOVE AND SHALL NOT BE USED FOR ANY OTHER PURPOSE OR RELEASED TO ANY OTHER PARTY WITHOUT THE WRITTEN CONSENT OF LPAS, INC. INFORMATION CONTAINED HEREIN IS AN INSTRUMENT OF PROFESSIONAL SERVICES AND SHALL REMAIN THE PROPERTY OF LPAS, INC. ALL RIGHTS RESERVED COPYRIGHT © 2009.

THIS DRAWING IS NOT FINAL OR TO BE USED FOR CONSTRUCTION UNTIL IT IS SIGNED BY THE ARCHITECT AND ENGINEER.

CONSULTANT

The Engineering Enterprise
Consulting Engineers
1125 HIGH STREET
AUBURN, CA 95603
(530) 886-8556

REGISTERED PROFESSIONAL ENGINEER
SCOTT WHEELER
No. E015491
Exp. 06/30/19
STRUCTURAL CALIFORNIA

FIRE ALARM SCHEDULES, NOTES & DETAILS

PROJECT NO: 1102-0005
DATE: 11-17-2017

SHEET NO:

E3.02

CONSTRUCTION SET

American Modular Systems

MARIN COMMUNITY COLLEGE SCHOOL DISTRICT
INDIAN VALLEY CAMPUS
(2) 60x32 BUILDING

SERIAL NUMBERS: 17-469-001 A-F
17-469-002 A-F

"ALL OF THE DRAWINGS AND DETAILS CONTAINED IN THIS PACKAGE ARE THE INTELLECTUAL PROPERTY OF AMS AND MAY NOT BE USED FOR CONSTRUCTION OR DESIGN BY ANOTHER ENTITY WITHOUT THE EXPRESS WRITTEN PERMISSION OF AMS."

AUTHORIZED USE: ALL INFORMATION INCLUDED IN ON THIS FORM DSA-103 SHEET IS FOR THE SOLE PURPOSE OF RECEIVING DSA APPROVAL AND ISSUANCE OF A PC #. NO OTHER USE IS AUTHORIZED WITHOUT THE EXPRESS WRITTEN CONSENT OF AMERICAN MODULAR SYSTEMS, INC.

TYPE OF MODULAR STEEL MOMENT FRAME BUILDING PROJECT
(X - INDICATES TEST OR INSPECTION TO BE DONE)
--- INDICATES NOT APPLICABLE)

TESTS or INSPECTIONS (as listed on DSA-103)

MATERIAL TYPE		DSA-103 Item #	DESCRIPTION	STOCKPILE A: Wood Floor Only	STOCKPILE B: Concrete Floors	CONSTRUCTION OF (diaphragm material-foundation material) C: OSB Floor Only - Wood Foundation	D: OSB Floor - Concrete Foundation	E: Concrete Floor - Concrete Foundation	RELOCATION OF CERTIFIED BUILDING F: Wood Foundation	G: Concrete Foundation
SOILS Verify the necessity of the Test and/or Inspections with the requirements of the Application that this PC is part of.	GENERAL	1	Site has been prepared properly prior to fill placement/excavations; Fdn excavations extended to proper depth and material; Materials below footing are adequate	---	---	---	X	X	---	X
	COMPACTED FILL	2a	Perform Qualification Testing of Fill Materials	---	---	---	X	X	---	X
		2b	Verify use of proper fill materials, inspect lift thickness, placement and compactation during placement of controlled fill	---	---	---	X	X	---	X
		2c	Test Compactation of controlled fill	---	---	---	X	X	---	X
CONCRETE	LIGHT WEIGHT FILL OVER METAL DECK	7a	Verify use of required design mix	---	X	---	---	X	---	---
		7c	Perform Slump and (where required) Air Content Test; determine Temperature of Concrete	---	X	---	---	X	---	---
		7d	Test concrete -Compression Tests	---	X	---	---	X	---	---
		7e	Inspect batching of concrete - See next cell below if waived (per Note 1)	---	X	---	---	X	---	---
		12	Waiver of Batch Plant Inspection See Note 1 for conditions and requirements	---	X	---	---	X	---	---
		7f	Inspect placement of concrete, reinforcing and embedded items over Steel Deck - by RBIP	---	X	---	---	X	---	---
	FOUNDATION	7a	Verify use of required design mix	---	---	---	X	X	---	X
		7b	Test Reinforcing Steel - See Note 2 for Waiver , One Story Bldgs.	---	---	---	X	X	---	X
		7c	Perform Slump and (where required) Air Content Test; determine Temperature of Concrete	---	---	---	X	X	---	X
		7d	Test concrete -Compression Tests	---	---	---	X	X	---	X
		7e	Inspect batching of concrete - See next cell below if waived (per Note 1)	---	---	---	X	X	---	X
		12 Note 1	Waiver of Batch Plant Inspection -To be performed by batch plant special inspector and project inspector. See Note 1 for conditions and requirements	---	---	---	X	X	---	X
		7f	Inspect placement of formwork, concrete, reinforcing steel and embedded items - by Project Inspector	---	---	---	X	X	---	X
	POST INSTALLED ANCHORS Note 3	11a	Inspect installation of post-installed anchors	---	---	---	X	X	---	X
		11b	Test post-installed anchors.	---	---	---	X	X	---	X
STRUCTURAL STEEL	MATERIAL VERIFICATION	17a	*Material are appropriately marked *Mfr. Certified Mill Test Reports *Material Sizes, Types and Grades comply with requirements	X	X	X	X	X	---	---
		17b	Sample and Test all Unidentified Structural Steel and Steel Deck	X	X	X	X	X	---	---
		17c	Examine seam welds of structural tubes and pipes	X	X	X	X	X	---	---
		17d	Verify member locations, bracing and all details constructed in the field	X	X	X	X	X	---	---
		17e	Verify stiffener locations, connection tab locations and all construction details fabricated in the shop.	X	X	X	X	X	---	---
	VERIFICATION OF MATERIALS, EQUIPMENT, WELDERS, ETC	19a	Verify weld filler material identification marking per AWS designation listed on the DSA approved documents and the WPS	X	X	X	X	X	---	---
		19b	Verify weld filler material manufacturer's certificate of compliance	X	X	X	X	X	---	---
		19c	Verify WPS, welder qualifications and equipment	X	X	X	X	X	---	---
	SHOP WELDING	19.1a	Inspect groove, multi-pass, and fillet welds > 5/16"	X	X	X	X	X	---	---
		19.1b	Inspect single-pass fillet welds = 5/16"	X	X	X	X	X	---	---
		19.1c	Inspect welding of stairs and railing systems. Note 4	X	X	X	X	X	---	---
	FIELD WELDING See Note 4	19.2a	Inspect groove, multi-pass, and fillet welds > 5/16"	---	---	X	X	X	---	X
		19.2b	Inspect single-pass fillet welds = 5/16"	---	---	X	X	X	---	X
		19.2f	Inspect welding of stairs and railing systems.	---	---	X	X	X	---	X
	SPRAY APPLIED FIRE-PROOFING	22a	Examine structural steel surface conditions, inspect application, take samples, measure thickness, and verify compliance of all aspects of application with DSA approved documents.	---	---	X	X	X	---	---
	OTHER	23a	Shop Welding - Inspect welding of cold-formed steel Periodic/Special Inspector	X	X	X	X	X	---	---
		23b	Shop Welding - Inspect welding of steel floor deck welds Periodic/Special Inspector	---	X	---	---	X	---	---
OTHER - GROUNDING Note 5		26b	Electrical grounding Test/Project	---	---	X	X	X	X	X
OTHER - SHOT PINS (Two Story Modular) Note 5		26c	Ceiling wire hangers (pins in metal deck with concrete fill) Test/Lab	---	X	---	---	X	---	---

Additional Information for PC designs only, not to be added to DSA-103

INSPECTOR CLASS (minimum requirements)	RBIP or Class 1	In Plant: RBIP or Class 1 Site: Class 4 for Single Story Site: Class 2 for Two-Story	Class 4 for Single Story Class 2 for Two-Story
SELECTION OF THE PROJECT INSPECTOR AND TESTING AGENCY	By the Owner and approved by DSA, A/E of Record and Structural Engineer	By the School District and approved by DSA, A/E of Record and Structural Engineer	
COST OF THE PROJECT INSPECTOR (Title 24, Part 1, Section 4-333(b) AND TESTING AGENCY (Title 24, Part 1, Section 4-335)	By the Owner	By the School District	

NOTES: NOTES APPLY ONLY WHEN TESTS OR INSPECTIONS APPLY TO YOUR PC SUBMITTAL.
Note 1: Waiver of Batch Plant Inspection (per CBC 1705A3.2 & 1705A3.3):
Verify that Either Condition a or b are noted in the specifications:
a) Concrete Plant complies fully with ASTM C94, Section 8 and 9, and has a current certification indicating the plant has automatic batching and recording capabilities from the National Ready Mixed Concrete Association
b) For One-story buildings, Compressive strength: 3500 psi Specified - 3000 psi Design
And Requirements c thru f are met:
c) Certified technician of the test laboratory check first batching at start of work and furnish mix proportions to licensed weighmaster
d) Licensed Weighmaster to positively identify materials as to quantity and certify each load by a ticket
e) Tickets transmitted to Inspector of Record
f) Submit Weighmaster Affidavit
Note 2: Test may be waived if mill cert. is provided
Note 3: Required only where the details of the PC specify the use of this type of anchor
Note 4: Required only where the details of the PC specify this Welding
Note 5: This test needs to be written in on the DSA-103 form

02-113876 - 24' x 40' - 120' x 40' EXPOSED STEEL SAVED: 12/7/2017 5:09 PM PLOTTED: 12/8/2017 11/0 AM

BUILDING DATA

OCCUPANCY	B (CLASSROOM USE FOR COLLEGE)
TYPE OF CONSTRUCTION	VB
WIND LOAD ALTERNATE METHOD PER CBC 1609A.6.2	V= 110 MPH ULT. WIND SPEED EXPOSURE = C K_{zt} = 1.00
FLOOR LIVE LOAD	~~50 LBS/SQ. FT.,~~ 50 LBS.+ 15 LBS./SQ. FT.~~, 100 LBS/SQ. FT. & 150 LBS./SQ. FT.~~
ROOF LIVE LOAD	20 LBS/SQ FT (REDUCIBLE)
FIRE SPRINKLER SYSTEM WEIGHT (PSF)	1.5
ALLOWABLE SOIL PRESSURE (PSF)	1,500 FOR CONCRETE ~~/ 1,000 FOR WOOD~~
FLOOD HAZARD AREA	NO
BUILDING AREA	1,920 SQ FT
CLIMATE ZONES	1-16
MODULES	MOMENT-RESISTANT FRAME (SINGLE STORY)
SYSTEM	10' x 32' MODULES
FOUNDATION TYPE	CONCRETE ~~/ WOOD~~

SEISMIC
$I = 1.0$ T=0.231 s R=3.5 (OMF)
$\Omega_0 = 3.0$ $C_d = 3.0$
SITE CLASS D $F_v = 1.5$

* PER CBC 1616A.1.12 (MODIFICATION TO ASCE 7-10, 12.8.1.3), FOR REGULAR STRUCTURES (5) STORIES OR LESS WITH PERIOD OF 0.5s OR LESS, C_S IS CALCULATED USING A S_S DESIGN VALUE EQUAL TO THE GREATER OF 1.5 OR 80% OF THE ACTUAL S_S VALUE

Seismic design category = D ($S_1 \leq 0.75$)
E (S_1 =0.75<1.5)

☒ LOW SEISMIC
S_S = 2.50 MAX (SITE) = 2.00 (DESIGN)*
$F_a = 1.0$ $S_{DS} = 1.33$
$C_s = 0.381$ W (DESIGN)*

☐ HIGH SEISMIC
S_S = 2.850 MAX (SITE) = 2.280 (DESIGN)*
$F_a = 1.0$ $S_{DS} = 1.52$
$C_s = 0.434$ W (DESIGN)*

☐ SITE SPECIFIC S_S = ______________

APPLICABLE CODES

PARTIAL LIST OF APPLICABLE CODES AS OF JANUARY 1, 2014

*2013 CALIFORNIA ADMINISTRATIVE CODE (CAC) – (PART 1, TITLE 24, CCR)

2013 CALIFORNIA BUILDING CODE (CBC), VOLUMES 1 AND 2 – (PART 2, TITLE 24 CCR) BASED ON THE 2012 INTERNATIONAL BUILDING CODE

2013 CALIFORNIA ELECTRICAL CODE (CEC) – (PART 3, TITLE 24, CCR) BASED ON THE 2011 NATIONAL ELECTRIC CODE

2013 CALIFORNIA MECHANICAL CODE (CMC) – (PART 4, TITLE 24, CCR) BASED ON THE 2012 UNIFORM MECHANICAL CODE

2013 CALIFORNIA PLUMBING CODE (CPC) – (PART 5, TITLE 24, CCR) BASED ON THE 2012 UNIFORM PLUMBING CODE

*2013 CALIFORNIA ENERGY CODE (CEC) – (PART 6, TITLE 24, CCR)

2013 CALIFORNIA FIRE CODE (CFC) – (PART 9, TITLE 24, CCR) BASED ON THE 2012 INTERNATIONAL FIRE CODE

*2013 CALIFORNIA GREEN CODE (CGC) – (PART 11, TITLE 24, CCR)

2013 CALIFORNIA REFERENCED STANDARDS CODE – (PART 12, TITLE 24, CCR)

2013 CALIFORNIA ELEVATOR SAFETY CONSTRUCTION CODE PART 7, TITLE 24, C.C.R

* EFFECTIVE JULY 1, 2014

PARTIAL LIST OF APPLICABLE STANDARDS

NFPA 13	Automatic Sprinkler Systems	2013 Edition
NFPA 14	Standpipe Systems	2013 Edition
NFPA 17	Dry Chemical Extinguishing Systems	2013 Edition
NFPA 17a	Wet Chemical Systems	2013 Edition
NFPA 20	Stationary Pumps	2013 Edition
NFPA 24	Private Fire Mains	2013 Edition
NFPA 72	National Fire Alarm Code (California Amended)	2013 Edition
(Note See UL, Standard 1971 for "Visual Devices")		
NFPA 253	Critical Radiant Flux of Floor Covering Systems	2006 Edition
NFPA 2001	Clean Agent Fire Extinguishing Systems	2012 Edition
ASME 17.1	Elevator Standard	2007 Edition

GENERAL NOTES

1. PC BUILDING CLASSIFED AS OCCUPANCY "A" WITH OCCUPANT LOAD 100 OR MORE CAN NOT BE REVIEWED OVER THE COUNTER (OTC).
2. PC BUILDING APPROVED ONLY FOR OCCUPANCY E OR B, OR A CATEGORY I & II WITH OCCUPANT LOAD LESS THAN 250.
3. PC BUILDING EXITING IS BASED ON THE USE OR OCCUPANCY AND WILL BE REVIEWED AS SITE SPECIFIC.
4. THIS PLAN INCLUDE 2013 CBC REQUIREMENTS FOR "WILDLAND URBAN INTERFACE" AREAS.
5. SITE USE SPECIFIC REQUIREMENT FOR AUTOMATIC SPRINKLER SYSTEM MIGHT BE REQUIRED. AUTOMATIC FIRE SPRINKLER REQUIREMENTS ARE NOT INCLUDED IN THIS PC APPROVAL.
6. FIRE SERVICE UNDERGROUND SHALL BE REVIEWED AS A SITE SPECIFIC APPLICATION.WATER SUPPLY SHALL BE DESIGNED TO MEET THE PC SPRINKLER DEMAND REQUIREMENTS.
7. PROVIDE A SITE SPECIFIC FIRE FLOW LETTER OF CERTIFICATION FROM AN APPROVED WATER PURVEYOR OR LOCAL FIRE AUTHORITY.
8. THIS PC PLAN SHALL NOT BE USED TO HOUSE "ROOMS OR AREAS WITH SPECIAL HAZARDS" SUCH AS LABORATORIES, VOCATIONAL SHOPS AND OTHER SUCH AREAS NOT CLASSIFIED AS GROUP H, LOCATED IN GROUP E OCCUPANCIES
9. A SEPARATE DSA APPLICATION NUMBER IS REQUIRED FOR DESIGN & INSTALLATION OF THE SOLAR PANEL SYSTEM, ITS ANCHORAGE & ROOF SUPPORT STRUCTURE.

SHEET INDEX

ARCHITECTURAL

- ☒ TS TITLE SHEET
- ☒ N1.0 GENERAL NOTES
- ☒ N2.0 GENERAL NOTES
- ☒ N3.0 SCHEDULES
- ☒ N4.0 ACCESSIBILITY AND SIGNAGE
- ☒ N5.0 MULTIPLE FLOOR PLAN CONFIGURATIONS
- ☐ N5.1 MULTIPLE FLOOR PLAN CONFIGURATIONS
- ☐ N5.2 MULTIPLE FLOOR PLAN CONFIGURATIONS
- ☒ EN.1 ENERGY CALCULATIONS
- ☒ EN.2 ENERGY CALCULATIONS
- ☒ EN.3 ENERGY CALCULATIONS
- ☒ EN.4 ENERGY CALCULATIONS
- ☒ EN.5 ENERGY CALCULATIONS
- ☒ EN.6 ENERGY CALCULATIONS
- ☒ A1.0 DEMONSTRATION KITCHEN FLOOR PLAN
- ☒ A1.0A CLASSROOM FLOOR PLAN
- ☐ A1.1 TYPICAL – FLOOR PLAN FOR CLASSROOM w/ SOLATUBE OPTION
- ☐ A1.2 OPTIONAL RESTROOM FLOOR PLANS
- ☒ A2.0 ROOF PLAN
- ☒ A2.1 ROOF PLAN DETAILS
- ☐ A3.0 NOT USED
- ☒ A4.0 TYPICAL INTERIOR ELEVATIONS
- ☒ A4.0A TYPICAL INTERIOR ELEVATIONS
- ☐ A4.1 INTERIOR ELEVATIONS – RESTROOMS
- ☐ A5.0 TYPICAL EXTERIOR DURA TEMP ELEVATIONS
- ☐ A5.1 TYPICAL ARCHITECTURAL DURA TEMP DETAILS
- ☐ A5.2 TYPICAL EXTERIOR STUCCO ELEVATIONS
- ☐ A5.3 TYPICAL ARCHITECTURAL STUCCO DETAILS
- ☐ A5.4 TYPICAL EXTERIOR LAP SIDING ELEVATIONS
- ☐ A5.5 TYPICAL ARCHITECTURAL LAP SIDING DETAILS
- ☒ A5.6 TYPICAL EXTERIOR SYNTHETIC STUCCO ELEVATIONS
- ☒ A5.6A TYPICAL EXTERIOR SYNTHETIC STUCCO ELEVATIONS
- ☒ A5.7 TYPICAL ARCHITECTURAL SYNTHETIC STUCCO DETAILS
- ☐ A6.0 NOT USED
- ☐ A7.0 ARCHITECTURAL DETAILS – WOOD STUDS
- ☐ A7.1 NOT USED
- ☒ A7.2 MISCELLANEOUS DETAILS
- ☐ A8.0 FIRE RATING DETAILS

STRUCTURAL

- ☒ S0.0 STEEL MEMBER PROPERTIES
- ☐ S1.0 TYP 50 PSF CONCRETE FOUNDATION PLAN
- ☒ S1.1 TYP 50+15 PSF CONCRETE FOUNDATION PLAN
- ☐ S1.2 TYP 100 PSF CONCRETE FOUNDATION PLAN
- ☐ S1.3 TYP 150 PSF CONCRETE FOUNDATION PLAN
- ☒ S1.4 CONCRETE FOUNDATION DETAILS
- ☒ S1.5 CONCRETE FOUNDATION OPTIONAL UTILITY OPENINGS IN FOOTINGS
- ☒ S1.6 CONCRETE FOUNDATION DETAILS
- ☒ S1.7 CONCRETE FOUNDATION OPTIONAL UTILITY OPENINGS IN FOOTINGS
- ☐ S2.0 WOOD FOUNDATION 50 PSF
- ☐ S2.1 WOOD FOUNDATION 50 PSF+15 PSF
- ☐ S2.2 WOOD FOUNDATION 100 PSF
- ☐ S2.3 WOOD FOUNDATION 150 PSF
- ☐ S2.4 WOOD FOUNDATION DETAILS
- ☐ S3.0 FLOOR FRAMING PLYWOOD OR STRUCTO–CRETE
- ☐ S3.1 FLOOR FRAMING CONCRETE OR STRUCTO–CRETE
- ☐ S3.2 FLOOR FRAMING CONCRETE N–32
- ☒ S3.3 FLOOR FRAMING CONCRETE 3–W
- ☐ S4.0 ROOF FRAMING OPEN SOFFIT
- ☒ S4.1 ROOF FRAMING OPEN SOFFIT DETAILS
- ☒ S4.2 ROOF FRAMING CLOSED SOFFIT
- ☐ S4.3 PARAPET ELEVATIONS AND DETAILS
- ☒ S5.0 MOMENT RESISTANT FRAME ELEVATIONS
- ☒ S5.1 FRAME CONNECTION DETAILS
- ☒ S6.0 STRUCTURAL ELEVATIONS
- ☐ S7.0 NOT USED
- ☒ S8.0 WOOD WALL FRAMING
- ☒ S8.1 WALL FRAMING DETAILS
- ☐ S9.0 METAL STUD WALL FRAMING ELEVATIONS
- ☐ S9.1 METAL STUD WALL FRAMING DETAILS
- ☐ S9.2 METAL STUD FRAMING DETAILS
- ☐ S10.0 RAMP PLANS
- ☐ S10.1 RAMP PLANS – DETAILS & NOTES

MECHANICAL

- ☒ M1.0 TYPICAL REFLECTED CEILING PLAN
- ☒ M1.0A TYPICAL REFLECTED CEILING PLAN
- ☐ M1.1 TYPICAL MECHANICAL PLAN OPTIONS
- ☐ M1.2 NOT USED
- ☐ M1.3 RESTROOM OPTION REFLECTED CEILING PLANS
- ☒ M1.4 MECHANICAL BUILDING SECTION & CEILING DETAILS
- ☒ M1.5 MECHANICAL BUILDING DETAILS
- ☒ M1.6 MECHANICAL ROOF DETAILS
- ☒ M1.7 CEILING & MECHANICAL NOTES

ELECTRICAL

- ☒ E1.0 TYPICAL ELECTRICAL PLAN
- ☒ E1.0A TYPICAL ELECTRICAL PLAN
- ☐ E1.1 RR OPTION ELECTRICAL PLAN
- ☒ E1.2 ELECTRICAL NOTES & DETAILS

PLUMBING

- ☒ P1.0 RESTROOM OPTION FLOOR PLANS
- ☒ P2.0 PLUMBING DETAILS
- ☒ P3.0 PLUMBING ISOMETRIC

SHEETS WITH SPECIFIC LOW / HIGH SEISMIC DESIGNATIONS / OPTIONS

TS	COVER SHEET
S1.5	CONCRETE FOUNDATION DETAILS
S2.0	WOOD FOUNDATION 50 PSF
S2.1	WOOD FOUNDATION 50 PSF+15 PSF
S2.2	WOOD FOUNDATION 100 PSF
S2.3	WOOD FOUNDATION 150 PSF
S3.0	FLOOR FRAMING PLYWOOD OR STRUCTO–CRETE

COPYRIGHT: © 2014 BY AMERICAN MODULAR SYSTEMS, INC. ALL RIGHTS RESERVED. NO PART OF THIS DOCUMENT MAY BE REPRODUCED OR TRANSMITTED IN ANY FORM OR BY ANY MEANS, ELECTRONIC, MECHANICAL, PHOTOCOPYING, RECORDING, OR OTHERWISE, WITHOUT THE PRIOR WRITTEN PERMISSION OF AMERICAN MODULAR SYSTEMS, INC. CERTAIN ELEMENTS CONTAINED IN THESE DOCUMENTS ARE REGISTERED TRADEMARKS. ALL PATENTABLE MATERIALS CONTAINED IN THESE DOCUMENTS AND ORIGINATING WITH AMERICAN MODULAR SYSTEMS, INC. SHALL REMAIN THE SOLE PROPERTY OF AMERICAN MODULAR SYSTEMS, INC. SUBMITTAL OR DISTRIBUTION TO MEET OFFICIAL REGULATORY REQUIREMENTS WILL NOT BE CONSTRUED AS PUBLICATION IN DEROGATION OF AMERICAN MODULAR SYSTEM, INC.'S COPYRIGHT OR OTHER RESERVED INTELLECTUAL PROPERTY RIGHTS AND INTERESTS.

American Modular Systems
787 Spreckels Ave. Manteca, CA 95336
Phone (209) 825-1921 - Fax (209) 825-7018
americanmodular.com

MODULAR MANUFACTURER PROPRIETARY STATEMENT

THESE DRAWINGS AND THE MATERIAL CONTAINED THEREIN ARE THE PROPERTY OF AMERICAN MODULAR SYSTEMS, INC. (AMS) AND SHALL NOT BE REPRODUCED, COPIED OR OTHERWISE DISPOSED OF DIRECTLY OR INDIRECTLY AND SHALL NOT BE USED IN WHOLE OR IN PART TO ASSIST IN THE MAKING OF OR FOR THE PURPOSE OF FURNISHING ANY INFORMATION FOR THE MAKING OF DRAWINGS, PRINTS, APPARATUS OR PARTS THEREOF WITHOUT THE FULL KNOWLEDGE AND WRITTEN CONSENT OF AMS. ALL PATENTABLE MATERIAL CONTAINED HEREIN AND ORIGINATING WITH AMS SHALL BE THE SOLE PROPERTY OF AMS.

PRE-CHECKED SET NAME
30' x 32' THRU 150' x 32' BUILDINGS

SITE SPECIFIC PROJECT NAME
MARIN COMMUNITY CSD - INDIAN VALLEY CAMPUS 60x32 BUILDING

SHEET TITLE
COVER SHEET

MANUFACTURER PROFESSIONAL OF RECORD ON PC
LICENSED ARCHITECT RANDALL PATRICK CAVANAGH No. C12631 Ren. 3-31-19 STATE OF CALIFORNIA

PROJECT SPECIFIC STATE AGENCY APPROVAL
FILE: 39-0
IDENTIFICATION STAMP DIV. OF THE STATE ARCHITECT
02 116495
ACS: T. MARKES
FLS: K. LAVELLA
SSS: J. O'DONNELL
AC TM FLS SS
DATE 12-18-2017

ORIGINAL PC STATE AGENCY APPROVAL

BASED ON PC# 02-113921
PRE-CHECK (PC) DOCUMENT – CODE: 2013 CBC
A SEPARATE PROJECT APPLICATION FOR CONSTRUCTION IS REQUIRED

REVISIONS
1
2
3
4

DRAWN BY:	BA
SCALE:	AS NOTED
DATE:	11/10/17

SHEET NUMBER
TS

SECTION 1 GENERAL REQUIREMENTS

1. GENERAL

   A. THE REQUIREMENTS OF THE GENERAL CONDITIONS OF THE AGREEMENT AND THIS GENERAL REQUIREMENT APPLY TO THE SEVERAL TRADE SECTIONS WITH THE SAME FORCE AS THOUGH FULLY REPEATED IN EACH TRADE SECTION.

   B. NAME BRANDS ARE INDICATED TO ESTABLISH A STANDARD OF QUALITY. ITEMS OF EQUAL OR BETTER QUALITY MAY BE SUBSTITUTED FOR THE LISTED BRAND NAMED PRODUCTS WITH THE WRITTEN APPROVAL OF D.S.A. AND THE ARCHITECT.

   C. ALL WORK SHALL COMPLY WITH THE REQUIREMENTS OF TITLES 19 AND 24 CALIFORNIA CODE OF REGULATIONS, 2013 C.B.C. NO CHANGES SHALL BE MADE FROM D.S.A. APPROVED DRAWINGS OR SPECIFICATIONS WITHOUT PRIOR WRITTEN APPROVAL OF D.S.A. AND THE ARCHITECT.

2. SCOPE OF WORK

   A. THE WORK CONSISTS OF MANUFACTURING OFF-SITE IN A PLANT AND INSTALLING ON-SITE, MODULAR RELOCATABLE BUILDINGS AS DEFINED HEREIN AND SHOWN AND DETAILED ON DRAWINGS.

   B. ALL REQUIREMENTS OF TITLE 24 OF THE STATE OF CALIFORNIA, CODE OF REGULATIONS, RELATING TO INSPECTIONS AND VERIFIED REPORTS SHALL BE COMPLIED WITH AND SHALL INCLUDE:

1. GENERAL RESPONSIBLE CHARGE OF FIELD ADMINISTRATION BY THE ARCHITECT OF RECORD.

2. INSPECTION IN-PLANT DURING THE COURSE OF CONSTRUCTION BY AN INSPECTOR APPROVED BY THE DIVISION OF THE STATE ARCHITECT AND THE DISTRICT ARCHITECT. THE INSPECTOR SHALL BE RESPONSIBLE FOR AND APPROVED TO INSPECT THE GENERAL CONSTRUCTION WELDING, MECHANICAL, AND ELECTRICAL WORK. COST OF THESE INSPECTIONS SHALL BE BORNE BY THE SCHOOL DISTRICTS.

3. ON-SITE INSPECTION OF THE BUILDING INSTALLATION ELECTRICAL AND UTILITY INSTALLATION OR CONNECTIONS BY AN INSPECTOR APPROVED BY THE DIVISION OF THE STATE ARCHITECT AND THE DISTRICT ARCHITECT AND RETAINED BY THE SCHOOL DISTRICT.

4. OTHER SPECIAL TESTS OR INSPECTIONS AS MAY BE REQUIRED BY THE DIVISION OF THE STATE ARCHITECT.

5. ADDENDUMS SHALL BE SIGNED BY THE ARCHITECT & APPROVED BY D.S.A.

6. CHANGES TO CONSTRUCTION DOCUMENTS AFFECTING ACS, FLS,& SSS SHALL BE SIGNED BY THE OWNER & ARCHITECT & APPROVED BY DSA PRIOR TO COMMENCING WORK. CHANGES TO THE CONSTRUCTION COST ARE REPORTED TO DSA USING FORM DSA-168 AT THE CONCLUSION OF THE PROJECT.

7. THE TESTING LAB SHALL BE IN THE EMPLOY OF THE OWNER.

8. ALL CONTRACTORS SHALL VERIFY ALL WORK CONDITIONS, DIMENSIONS AND DETAILS AND REPORT ANY OR ALL OMISSIONS AND DISCREPANCIES TO THE DESIGNER/OWNER IMMEDIATELY BEFORE COMMENCING WORK.

9. EACH CONTRACTOR TO BE RESPONSIBLE TO SEE THAT THEIR WORK CONFORMS TO ALL GOVERNMENTAL CODES WHETHER OR NOT SO STATED ON THE DRAWINGS.

10. ALL MATERIALS AND WORKMANSHIP TO CONFORM TO THE LATEST REQUIREMENTS OF THE GOVERNING BUILDING CODES IN EFFECT AT TIME OF DSA APPLICATION.

11. ALL MANUFACTURED ARTICLES, MATERIALS AND EQUIPMENT SHALL BE APPLIED, INSTALLED, CONNECTED AND ERECTED PER MANUFACTURER'S DIRECTIONS AND INSTRUCTIONS.

12. SHOP DRAWINGS MAY BE REQUIRED. IF SO, THEY WILL BE ACCURATELY DRAWN TO A LARGE ENOUGH SCALE TO SHOW ALL PERTINENT FEATURES OF THE ITEM AND ITS CONNECTION TO RELATED WORK.

13. THE MANUFACTURER OF BUILDING IS TO PLACE TWO PERMANENT METAL IDENTIFICATION LABEL ON EACH MODULE, MECHANICALLY FASTENED TO THE FRAME SEE "GENERAL DESIGN REQUIREMENTS", SHEET N2.0. FOR PROJECTS MANUFACTURED OFF-SITE, THE PLANT INSPECTOR IS TO INDICATE THE MANUFACTURER'S NAME AND SERIAL NUMBER OF EACH MODULE ON THE VERIFIED REPORT AND D.S.A. APP. NUMBER.

14. ALL TESTS AND INSPECTIONS REQUIRED BY DSA SHALL BE COMPLIED WITH. ALL TESTS REQUIRED BY FIRE AND LIFE SAFETY REGULATIONS SHALL BE BY A NATIONALLY RECOGNIZED TESTING LABORATORY.

SECTION 2 FOUNDATION

1. ASSUMED ALLOWABLE SOIL BEARING:
   - 1500 P.S.F. FOR CONCRETE FOUNDATIONS EMBEDDED 12" MIN. BELOW GRADE.
   - ~~1000 P.S.F. FOR WOOD FOUNDATIONS ON GRADE.~~

2. FOOTINGS SHALL BE LOCATED ON UNDISTURBED, FIRM, NATURAL SOIL, APPROVED COMPACTED FILL, OR ON AN APPROVED PAVED SURFACE.

NOTE: THE FOUNDATION SYSTEM PRESENTED HEREIN COMPLIES WITH INTERPRETATION OF REGULATIONS, IR 16-1, ISSUED BY DIVISION OF THE STATE ARCHITECT, FOR TEMPORARY BUILDINGS. THIS FOUNDATION SYSTEM IS NON-CONVENTIONAL AND THE STRUCTURAL ENGINEER TAKES NO RESPONSIBILITY FOR ITS CONSTRUCTION OR LONGEVITY.

3. WORK NOT INCLUDED:

   A. ALL ON-SITE OR OFF-SITE UTILITIES AND THE CONNECTION OF THEM TO THE BUILDING UNLESS INDICATED ON THE DRAWINGS.

   B. ALL LEVELING, GRADING OR OTHER SITE PREPARATION EXCEPT CONCRETE OR WOOD LEVELING STRIPS WHERE REQUIRED, UNLESS OTHERWISE INDICATED ON THE DRAWINGS.

   C. FIRE ALARM SYSTEM, PROGRAM BELL, PUBLIC ADDRESS SYSTEM, INTERCOM SYSTEM, TV, TELEPHONE SYSTEM, UNLESS OTHERWISE INDICATED ON THE DRAWINGS, OR MODIFIED BY CHANGE ORDER.

4. WHEELS AND HITCH SHALL REMAIN THE PROPERTY OF THE CONTRACTOR.

5. ACCESSIBILITY OF SITE: THE SCHOOL DISTRICT SHALL PROVIDE ACCESS TO THE SITE FOR THE INSTALLATION OF BUILDINGS. REMOVAL OF TREES, SHRUBS, FENCING, SPRINKLERS ETC. NECESSARY FOR THE MOVE-IN OF BUILDINGS SHALL BE THE RESPONSIBILITY OF THE SCHOOL DISTRICT.

SECTION 3 CONCRETE

1. CONCRETE CONSTRUCTION SHALL CONFORM TO ACI 318-11.

2. THE MINIMUM 28 DAY STRENGTH AND TYPE OF CONCRETE SHALL BE AS FOLLOWS:
   SLABS ON GRADE & FOUNDATIONS....... 3000 PSI (150 PCF)
   CONCRETE OVER METAL DECK.............. 3000 PSI (110 PCF)

3. THE MAXIMUM WATER TO CEMENT (W/C) RATIO SHALL BE 0.55 FOR FOUNDATIONS AND 0.40-0.45 FOR CONCRETE OVER METAL DECK SLABS.

4. CONCRETE SLUMP SHALL BE 4" ± 1".

5. CEMENT SHALL CONFORM TO ASTM C150, TYPE I OR II.

6. CONCRETE AGGREGATES:
   A. NATURAL SAND AND ROCK AGGREGATES SHALL CONFORM TO ASTM C33.
   B. LIGHTWEIGHT AGGREGATE SHALL CONFORM TO ASTM C330.
   C. MAX AGGREGATE SIZE SHALL BE 1"±1/4".

7. REINFORCING SHALL CONFORM TO ASTM A615-GRADE 60, UNLESS OTHERWISE NOTED.

8. CONCRETE COVERAGE SHALL BE AS FOLLOWS, UNLESS OTHERWISE NOTED ON DRAWINGS:
   CONCRETE DEPOSITED DIRECTLY AGAINST GROUND (EXCEPT SLABS) ......3"
   CONCRETE EXPOSED TO GROUND BUT PLACED IN FORMS..........................2"
   SLABS (ON GROUND)....................................POSITION IN CENTER OF SLAB

9. ALL BARS SHALL HAVE A CLASS B MINIMUM SPLICE LAP PER DETAILS 6&9/S1.4, UNLESS OTHERWISE NOTED.

10. REINFORCING BARS SHALL NOT BE WELDED UNLESS SPECIFICALLY DETAILED IN THE APPROVED DRAWINGS. BARS DETAILED TO BE WELDED SHALL BE ASTM A706 BARS AND WELDING ELECTRODES SHALL BE E80XX. WELDING SHALL CONFORM WITH AWS D1.4-11 AND SHALL BE CONTINUOUSLY INSPECTED.

11. WELDED WIRE FABRIC SHALL CONFORM TO ASTM A185 AND SHALL BE LAP SPLICED TWO SQUARES MINIMUM EACH DIRECTION.

12. NOTIFY THE STRUCTURAL ENGINEER PRIOR TO PLACING CONCRETE.

SECTION 5 STEEL

1. GENERAL - ALL WORK SHALL CONFORM TO THE REQUIREMENTS OF AISC STANDARD SPECIFICATIONS, TITLE 24 OF CALIFORNIA CODE OF REGULATIONS AND THE AMERICAN IRON AND STEEL INSTITUTE SPECIFICATIONS FOR DESIGN OF STEEL STRUCTURAL MEMBERS. A COPY OF TITLE 24 SHALL BE KEPT AT THE JOBSITE AT ALL TIMES.

2. WELDING - ALL WELDING DONE BY SHIELDED ELECTRIC-ARC OR FLUX CORED-ARC PROCESS COMPLYING WITH REQUIREMENTS OF THE "STRUCTURAL WELDING CODE" OF THE AMERICAN WELDING SOCIETY.WELDING DONE BY OPERATORS QUALIFIED BY TESTS ACCEPTABLE TO THE DIVISION OF THE STATE ARCHITECT. WELDING INSPECTION PER TITLE 24, PART 2, CCR, SECTIONS 1705A2.2.1 AND 1705.A2.2.5 WELDING ELECTRODE SHALL BE E70XX. ALL WELDS USED IN PRIMARY MEMBERS AND CONNECTIONS IN THE LATERAL FORCE-RESISTING SYSTEMS SHALL BE MADE WITH A FILLER METAL THAT HAS A MINIMUM CHARPY V-NOTCH TOUGHNESS OF 20FT-LBS AT ZERO DEGREES F AND COMPLYING WITH AWS D1.8-09. SECTION 6.3.

3. STRUCTURAL STEEL SHAPES SHALL CONFORM TO THE FOLLOWING:

   A. STRUCTURAL STEEL CHANNELS SHALL CONFORM TO ASTM A572 (50 KSI) TYP. U.N.O.

   B. PIPE COLUMNS SHALL CONFORM TO ASTM A-53 WITH SULFUR CONTENT NOT EXCEEDING 0.05% TYP. U.N.O.

   C. STEEL TUBING SHALL CONFORM TO ASTM A-500 GRADE B OR A.S.T.M. A579 GRADE 50 FOR GAUGE TUBING-TYP. U.N.O.

   D. STEEL PLATES, ANGLES, BARS AND MISC. SHAPES SHALL CONFORM TO ASTM A36 (36 KSI) TYP. U.N.O. NOTE: ASTM A572 (50 KSI) MAY BE SUBSTITUTED FOR ASTM A36 (36 KSI)

   E. STRUCTURAL WELDS ARE DESIGNED FOR FULL ALLOWABLE STRESS UNLESS OTHERWISE NOTED.

4. ERECTION - STRUCTURAL STEEL ERECTED TRUE, STRAIGHT, PLUMB AND TO ITS DESIGNATED LOCATIONS. FIELD CONNECTIONS BOLTED OR WELDED AS INDICATED ON THE DRAWINGS.

5. NAILS, BOLTS, SCREWS AND NUTS, ETC. - FOR EXTERIOR WORK SHALL BE CADMIUM PLATED OR GALVANIZED.

   A. BOLTS FOR STRUCTURAL STEEL JOINTS SHALL CONFORM TO A.S.T.M. A-307 UNLESS OTHERWISE NOTED. ALL HOLES FOR MACHINE AND CARRIAGE BOLTS THRU STEEL TO BE DRILLED, OR TORCH PILOT HOLE AND REAM MIN. +1/16" TO BOLT SIZE. NELSON STUDS (WELDED TO STEEL) MAY BE SUBSTITUTED FOR BOLTS SAME LENGTH AND DIAMETER.

6. HANDRAILS - FABRICATED, AS DETAILED, WELDS GROUND SMOOTH.

7. SHOP PAINT

   A. EXPOSED STEEL COATED WITH ONE SHOP COAT OF RED OXIDE PRIMER.

   B. ALL SURFACES THOROUGHLY CLEANED BY EFFECTIVE MEANS PRIOR TO APPLICATION OF SHOP COATS.

8. TESTS

   A. PROVIDE MILL CERTIFICATES OR TEST ALL STEEL MEMBERS PER TITLE-24 PART 2, CCR SECTION 1704A.3

SECTION 6 CARPENTRY

1. SCOPE OF WORK
   CONTRACTOR SHALL PROVIDE ALL LABOR, MATERIALS AND SERVICES TO INSTALL CARPENTRY.

2. MATERIALS
   LUMBER GRADE MARKED IN ACCORDANCE WITH "STANDARD GRADING AND DRESSING RULES NO. 17" OF WEST COAST LUMBER INSPECTION BUREAU, OR "WESTERN LUMBER GRADING RULES", 2011 EDITION OF WESTERN WOOD PRODUCTS ASSOCIATION. OSB OR PLYWOOD GRADE MARKED IN ACCORDANCE WITH PRODUCT STANDARD PS 1-09 FOR SOFTWOOD OSB OR PLYWOOD, OF AMERICAN PLYWOOD ASSOCIATION. EACH SHEET SHALL BEAR THE STAMP OF APA, PITTSBURGH TESTING, OR TECO.

   A. JOISTS, HEADERS, PLATES, STUDS: DOUGLAS FIR S4S #2 OR HEM FIR S4S #2 MINIMUM, U.N.O. NOTE: MSR 1650 E1.5 MAY BE SUBSTITUTED FOR #2 GRADE IF IT MEETS THE STRUCTURAL REQUIREMENTS FOR FLOOR AND ROOF MEMBERS.

   B. POSTS AND TIMBERS: DOUGLAS FIR S4S #1 OR HEM FIR S4S #1 MIN.

   C. BLOCKING: DOUG FIR #3, OR HEM FIR #3, OR STD. & BET.

   D. SILLS AND LUMBER & SHIM PLATES IN CONTACT WITH CONCRETE, MASONRY OR EARTH: DOUG FIR #2 OR HEM FIR #2 MIN. PRESSURE TREATED IN ACCORDANCE WITH CBC 2304.11.2. EACH PIECE SHALL BEAR AWPA STAMP. AWPA STANDARD U1 & T1 GROUND CONTACT, D.F. (OR H.F.) #2 ABOVE GROUND.

   E. MOISTURE BARRIER: KRAFT WATERPROOF BUILDING PAPER, OR 15 LB. FELT, CBC SECTION 1404.2.

   F. STUDS - S4S DOUG FIR #2 OR #2 HEM FIR. MAXIMUM MOISTURE CONTENT OF 19% AT TIME OF INSTALLATION.

   G. FASTENERS - FASTENERS SHALL BE CORROSION RESISTANT PER C.B.C. 2304.9.1.1 COMMON NAILS FOR EXTERIOR SIDING & FOUNDATION ONLY.

   H. BUILDING TRIM - 2x RESAWN SELECT D.F., H.F., OR CEDAR.

   J. DOOR/WINDOW TRIM - 1x4 RESAWN D.F., H.F., OR CEDAR.

   K. FRAMING CONNECTORS SHALL BE FROM SIMPSON CATALOG LATEST ED.

   L. FIRE BLOCKS SHALL CONFORM TO CBC SECTION 718.2

   M. ALL NAILS SHALL BE COMMON NAILS UNLESS OTHERWISE NOTED.

   N. FOUNDATION LUMBER: ALL CUT ENDS AND HOLES IN PRESSURE TREATED LUMBER SHALL BE TREATED WITH "CUPRINOL".

   O. ALL BOLTS AND LAG SCREWS SHALL COMPLY WITH THE 2012 NATIONAL DESIGN SPECIFICATION FOR WOOD CONSTRUCTION (ANSI\AWC NDS-2012).

   P. HOLES FOR BOLTS IN WOOD SHALL BE BORED WITH A BIT OF THE SAME NOMINAL DIAMETER AS THE BOLT + 1/16".

   Q. HOLES FOR LAG SCREWS SHALL BE FIRST BORED TO THE SAME NOMINAL DIAMETER AND DEPTH AS THE SHANK. THE REMAINDER OF THE HOLE SHALL BE NO LARGER THAN THE ROOT OF THE THREAD.

   R. ALL BOLTS AND LAG SCREWS SHALL BE PROVIDED WITH METAL WASHERS UNDER HEADS AND NUTS WHICH BEAR ON WOOD.

3. WORKMANSHIP

   A. FRAMING - SECURELY NAILED, BRIDGED AND BLOCKED TO FORM RIGID STRUCTURE. WORK CUT, FITTED AND ASSEMBLED LEVEL PLUMB AND TRUE TO LINE. TRIM IN AS LONG LENGTHS AS POSSIBLE WITH ALL STANDING TRIM IN ONE PIECE. TRIM SEALED AT ALL EDGES.

   B. NAILING - IN ACCORDANCE WITH TITLE 24, CALIFORNIA BUILDING CODE, TABLE 2304.9.1

   C. EXTERIOR WALLS - FACTORY FABRICATED. CAULKING PROVIDED BETWEEN PERIMETER OF WALL AND STRUCTURAL MEMBERS PROVIDING WEATHER-PROOF AND WATER-TIGHT SEAL. NECESSARY CLOSERS, SEALS, AND FLASHINGS PLACED AT TOP AND BASE SUPPORT OF PANELS AND AROUND OPENINGS.

   D. NAILS INTO P.T. LUMBER TO BE HOT DIPPED GALVANIZED.

   E. MACHINE APPLIED NAILING: USE OF MACHINE NAILING IS SUBJECT TO A SATISFACTORY JOBSITE DEMONSTRATION FOR EACH PROJECT AND THE APPROVAL BY THE PROJECT ARCHITECT OR STRUCTURAL ENGINEER AND THE DIVISION OF THE STATE ARCHITECT. THE APPROVAL IS SUBJECT TO CONTINUED SATISFACTORY PERFORMANCE. MACHINE NAILING WILL NOT BE APPROVED IN 5/16" OSB. IF NAILHEADS PENETRATE THE OUTER PLY MORE THAN WOULD BE NORMAL FOR A HAND HAMMER OR IF MINIMUM ALLOWABLE EDGE DISTANCES ARE NOT MAINTAINED THE PERFORMANCE WILL BE DEEMED UNSATISFACTORY.

   F. MOISTURE BARRIER - APPLIED TO STUDS WEATHER-BOARD FASHION, HORIZONTAL JOINTS LAPPED MIN 6" INCLUDING BUILDING CORNERS. SHEATHING APPLIED OVER MOISTURE BARRIER.

   G. TRIM SEALED AT ALL EDGES. SEALANT PAINTED TO MATCH TRIM OR SIDING UNLESS TRANSPARENT TYPE.

SECTION 7A SHEET METAL

1. SCOPE OF WORK

   CONTRACTOR SHALL PROVIDE ALL LABOR, MATERIALS AND SERVICES TO INSTALL INDICATED SHEET METAL.

2. MATERIALS

   A. SHEET METAL - STEEL SHEETS HOT DIP GALVANIZED WITH 1.25 OZ. PER SQUARE FOOT ZINC COATING CONFORMING TO ASTM A526. MINIMUM 26 GA. UNLESS OTHERWISE NOTED ON THE DRAWINGS.

   B. SOLDER - OF STAND, GRADE "A" OF EQUAL PARTS, ARD BRAND, LEAD AND TIN ASTM B32.

   C. FLUX - ZINC SATURATED MURIATIC ACID.

   D. GUTTERS: 26 GA. G-90 GALV. STEEL
      DOWNSPOUTS: 2"x3" CONVOLUTED 30 GA. G-90 GALV. STEEL
      GUTTER ENDCAPS: 26 GA. G-90 GALV. STEEL
      GUTTER CLIPS: 18 GA. G-90 GALV. STEEL

3. WORKMANSHIP

   SHEET METAL ACCURATELY FORMED TO DIMENSIONS AND SHAPES DETAILED WITH TRUE STRAIGHT LINES, CORNERS AND ANGLES. FLASHING INSTALLED IN LONGEST LENGTHS POSSIBLE. EXTERIOR WORK FORMED, FABRICATED AND INSTALLED SO THAT IT ADEQUATELY PROVIDES FOR EXPANSION AND CONTRACTION IN THE COMPLETED WORK AND FINISHES WATER AND WEATHER TIGHT. ALUMINUM SHALL BE SEPARATED FROM FERROUS METAL BY POLYETHYLENE TAPE OR FLOOD COAT OF ASPHALTIC PAINT.

SECTION 7B METAL ROOFING

1. SCOPE OF WORK
   CONTRACTOR SHALL PROVIDE ALL LABOR, MATERIALS AND SERVICES TO INSTALL METAL ROOFING. TEST RESULTS OR CALCULATIONS SHOWING THE ROOFING SYSTEM WILL WITHSTAND THE UPLIFT OF 115 MPH ULTIMATE WIND SPEED SHALL BE SUBMITTED WITH THE PLANS AND SPECIFICATIONS.

2. MATERIALS

   A. ROOF: 3 INCH STANDING SEAM, MINIMUM 20-GAUGE G-90 GALV. INTERLOCKING (UN-PENETRATED) SHEET STEEL PANELS (G90). ALTERNATE: 26 GAUGE WHEN INSTALLED OVER PLYWOOD SHEATHING.

   B. CLASS B FIRE RATING

   C. FASTENERS SHALL BE HOT-DIPPED GALVANIZED

   D. BUILT-UP ROOFING

SECTION 7C SEALANT

1. SCOPE OF WORK
   CONTRACTOR SHALL PROVIDE ALL LABOR, MATERIAL AND SERVICES TO SEAL BUILDINGS.

2. MATERIALS
   VULKEM SEALANT, POLYURETHANE, MANUFACTURED BY MAMECO INTERNATIONAL FOR ROOFS.
   "GEOCEL" SILICONIZED CAULK, GE, DUPONT, EAGLESEAL OR DAP FOR ALL OTHER APPLICATIONS, OR EQUAL.

   A. SEALANT V.O.C. LIMITS PER SCAQMD RULE 1168 (AS SHOWN IN TITLE 24, PART 11, TABLE 5.504.4.1 AND TABLE 5.504.4.2)

3. WORKMANSHIP
   SEALANT APPLIED TO DRY CLEAN SURFACES, WHEREVER INDICATED ON DETAILS AND AS NEEDED TO MAKE BUILDING WATERTIGHT IN ACCORDANCE WITH MANUFACTURER'S SPECIFICATIONS.

SECTION 8 HOLLOW METAL DOORS AND FRAMES

1. SCOPE OF WORK
   CONTRACTOR SHALL PROVIDE ALL LABOR, MATERIALS AND SERVICES TO INSTALL HOLLOW METAL DOORS AND FRAMES.

2. MATERIALS

   A. DOORS - INSULATED TYPE L FULL FLUSH, MANUFACTURED BY AMWELD MANUFACTURING COMPANY, 18 GA. 1-3/4" THICK PER CS242 MIN, REINFORCE FOR HARDWARE-BOTH FACES FOR CLOSER, SOUND DEADEN INTERIOR.

   B. FRAMES - 16 GA COLD ROLLED, 2" FACES, CS242 MIN. 3 ANCHORS PER JAMB + ADJUSTABLE FLOOR ANCHOR, EACH JAMB REINFORCE FOR HARDWARE. PROVIDE STRIKE BOX, PROVIDE SOUND DEADENING: 1/8" UNDERCOATING OR INSULATING FILL.

3. WORKMANSHIP
   ALL WORK FABRICATED IN SHOP TO REQUIRED PROFILES BY FORMING AND WELDING, WITH ARISES AND EDGES STRAIGHT, SHARP FIT FABRICATED ACCURATELY WITH SQUARE CORNERS, HAIRLINE JOINTS AND SURFACES FREE FROM WARP, WAVE, BUCKLE OR OTHER DEFECTS AFTER FABRICATION, DOORS AND FRAMES CLEANED THOROUGHLY, ALL WELDS GROUND SMOOTH AND GIVEN PRIME COAT.

~~SECTION 9A EXTERIOR PLASTER~~

LATHING AND PLASTERING MATERIALS AND ACCESSORIES SHALL BE MARKED BY THE MANUFACTURER'S DESIGNATION TO INDICATE COMPLIANCE WITH THE APPROPRIATE STANDARDS REFERENCED IN THIS SECTION AND STORED IN SUCH A MANNER TO PROTECT THEM FROM THE WEATHER, PER C.B.C 2507.1.

LATHING AND PLASTERING MATERIALS SHALL CONFORM TO THE STANDARDS LISTED IN C.B.C. TABLE 2507.2 AND CHAPTER 35, AND, WHERE REQUIRED FOR FIRE PROTECTION, SHALL ALSO CONFORM TO THE PROVISIONS OF CHAPTER 7.

GYPSUM BOARD AND GYPSUM PLASTER CONSTRUCTION SHALL BE OF THE MATERIALS LISTED IN C.B.C. TABLES 2506.2 AND 2507.2. THESE MATERIALS SHALL BE ASSEMBLED AND INSTALLED IN COMPLIANCE WITH THE APPROPRIATE STANDARDS LISTED IN TABLES 2508.1 AND 2511.1, AND CHAPTER 35 (PER 2508.1).

2510.6 WATER-RESISTIVE BARRIERS. WATER-RESISTIVE BARRIERS SHALL BE INSTALLED AS REQUIRED IN SECTION 1404.2, AND WHERE APPLIED OVER WOOD-BASED SHEATHING, SHALL INCLUDE A WATER-RESISTIVE VAPOR-PERMEABLE BARRIER WITH A PERFORMANCE AT LEAST EQUIVALENT TO TWO LAYERS OF GRADE D PAPER.

EXCEPTION: WHERE THE WATER-RESISTIVE BARRIER THAT IS APPLIED OVER WOOD-BASED SHEATHING HAS A WATER RESISTANCE EQUAL TO OR GREATER THAN THAT 60-MINUTE GRADE D PAPER AND IS SEPARATED FROM THE STUCCO BY AN INTERVENING, SUBSTANTIALLY NONWATER-ABSORBING LAYER OR DRAINAGE SPACE.

1. PLASTER NOTES: PLASTERING WITH CEMENT PLASTER SHALL NOT BE LESS THAN THREE COATS WHEN APPLIED OVER METAL LATH OR WIRE FABRIC LATH AND SHALL NOT BE LESS THAN TWO COATS WHEN APPLIED OVER MASONRY CONCRETE OR GYPSUM BACKING AS SPECIFIED IN SECTION 2510.5.
   A. THE FIRST COAT SHALL BE APPLIED WITH SUFFICIENT MATERIAL AND PRESSURE TO FILL SOLIDLY ALL OPENINGS IN THE LATH. THE SURFACE SHALL BE SCORED HORIZONTALLY SUFFICIENTLY ROUGH TO PROVIDE ADEQUATE BOND TO RECEIVE THE SECOND COAT.
   B. THE SECOND COAT SHALL BE BROUGHT OUT TO PROPER THICKNESS, RODDED AND FLOATED SUFFICIENTLY ROUGH TO PROVIDE ADEQUATE BOND FOR THE FINISH COAT. THE SECOND COAT SHALL HAVE NO VARIATION GREATER TO THAN 1/4 INCH (6.4 mm) IN ANY DIRECTION UNDER 5-FOOT STRAIGHT EDGE.
   C. THE FINISH COATS SHALL BE APPLIED OVER BASE COATS THAT HAVE BEEN IN PLACE FOR THE TIME PERIODS SET FORTH IN ASTM C 926. THE THIRD OR FINISH COAT SHALL BE APPLIED WITH SUFFICIENT MATERIAL AND PRESSURE TO BOND TO AND TO COVER THE BROWN COAT AND SHALL BE OF SUFFICIENT THICKNESS TO CONCEAL THE BROWN COAT.

SECTION 9B PAINTING

1. SCOPE OF WORK.
   CONTRACTOR SHALL PROVIDE ALL LABOR, MATERIALS AND SERVICES TO PAINT BUILDING. ALL EXPOSED SURFACES OF BUILDING AND RAMPS SHALL BE PAINTED EXCEPT ALUMINUM WINDOW FRAMES, THRESHOLDS, AND ROOFING.

2. MATERIALS
   A. FOR EXTERIOR WOOD:

REF.BRAND	DUNN EDWARDS	KELLY MOORE	SHERWIN WILLIAMS	SINCLAIR
PRIMER	42-9M	1240	Y24W20	289-N
FINISH	QD-60-XX	1240-XXX	B54WZ102	GE2-NXX

   B. FOR INTERIOR TRIM:

REF.BRAND	DUNN EDWARDS	KELLY MOORE	SHERWIN WILLIAMS	SINCLAIR
FINISH	W450-XX	1650-XXX	A26W11	40XX

   C. FOR METAL:

REF.BRAND	DUNN EDWARDS	KELLY MOORE	SHERWIN WILLIAMS	SINCLAIR
PRIMER	43-4	1710	B50NZ6	15N
FINISH	10-XX	1700-XXX	B54WZ102	GE2-NXX

   D. INTERIOR PAINT & COATINGS SHALL COMPLY WITH TITLE 24, PART 11, "CAL-GREEN" SECTION 5.504.4.3, AND V.O.C. LIMITS PER TABLE 5.504.4.3.

3. WORKMANSHIP
   ALL EXPOSED SURFACES SHALL BE PAINTED EXCEPT ALUMINUM WINDOW FRAMES AND THRESHOLDS. MATERIAL SHALL BE OF THE GRADE SPECIFIED OR EQUAL.

   A. EXTERIOR WOOD SIDING, TRIM AND SKIRTING FLAT OR SEMI-GLOSS LATEX - APPLY ONE COAT OF PRIME AND AT LEAST ONE FINISH COAT. PRIME COAT SHALL BE BRUSHED ON OR SPRAYED AND BACK BRUSHED INTO ALL GROOVES IN THE SIDING. IF NECESSARY, IN THE OPINION OF THE INSPECTOR, AN EXTRA COAT SHALL BE APPLIED TO ALL GROOVES SO THAT THE FINISH COAT WILL HAVE A UNIFORM APPEARANCE. ALLOW PRIME COAT TO DRY ACCORDING TO MANUFACTURER'S RECOMMENDATION. PRIME AND FINISH COATS SHALL BE COMPATIBLE AND MANUFACTURED BY THE SAME COMPANY.

   B. INTERIOR TRIM - TRIM NOT PRE-COATED SHALL BE PAINTED WITH TWO COATS OF SEMI - GLOSS LATEX OVER PRIMER.

   C. INTERIOR HARDWOOD CABINETS - TWO COATS LOW LUSTER POLYURETHANE FINISH. APPLY FIRST COAT THINNED WITH ONE QUART MINERAL SPIRITS PER GALLON. APPLY SECOND COAT AS RECOMMENDED BY MANUFACTURER.

   D. METAL - ALL METAL SURFACES SHALL BE PAINTED WITH TWO COATS OF ALKYD FINISH COAT OVER ZINC CHROMATE OR EQUAL RUST INHIBITING PRIMER.

   E. RAMP - ONE COAT OF FERROX NON-SLIP (0.8 MIN. C.O.F.) SURFACING AS MANUFACTURED BY AMERICAN ABRASIVE METALS OR COMPARABLE. ALL PAINTS OF THE TYPE INDICATED SHALL BE LISTED ON THE STATE OF CALIFORNIA QUALIFIED PRODUCTS LIST, OR EQUAL.

   F. SUBMIT ONE SET OF COLOR SAMPLES TO ARCHITECT FOR EACH PRODUCT TO ASSIST IN SELECTION.

SECTION 9C INTERIOR AIR QUALITY CONTROL

THE INTERIOR ENVIRONMENT SHALL BE ASSEMBLED WITH PRODUCTS THAT CONTRIBUTE TO A HEALTHY INDOOR AIR QUALITY (IAQ). THE FOLLOWING SHALL COMPLY TITLE 24, PART 11 ("CAL-GREEN"):
1. ADHESIVES, SEALANTS, CAULKS — SECTION 5.504.4.1
2. PAINTS, COATINGS — SECTION 5.504.4.3
3. AEROSOL PAINTS & COATINGS — SECTION 5.504.4.3.1
4. CARPET SYSTEMS — SECTION 5.504.4.4
   A. CARPET SHALL MEET CRI'S "GREEN LABEL PLUS" PROGRAM, NSF/ANSI '140 GOLD' LEVEL, OR OTHER APPROVED TESTING PER 5.504.4.4.
5. CARPET CUSHION OR PAD — SECTION 5.504.4.4.1
   A. CUSHION/PAD SHALL MEET THE CRI'S "GREEN LABEL" PROGRAM.
6. COMPOSITE WOOD PRODUCTS — SECTION 5.504.4.5
   A. ALL COMPOSITE WOODS MUST NOT EXCEED THE FORMALDEHYDE LIMITS AS SPECIFIED IN ARB'S "AIR TOXICS CONTROL MEASURE" (17 CCR 93120), OR NON-EXEMPT MATERIALS PER TABLE 5.504.4.5.
7. RESILIENT FLOORING SYSTEMS — SECTION 5.504.4.6
   A. RESILIENT FLOORING SHALL BE CERTIFIED UNDER THE "FLOORSCORE" PROGRAM BY RFCI, COMPLY WITH CA-CHPS 01350, OR OTHER APPROVED TESTING PER 5.504.4.6.

SECTION 13 SITE ASSEMBLY

1. SCOPE OF WORK
   CONTRACTOR SHALL PROVIDE ALL LABOR MATERIALS AND SERVICES TO PREPARE THE BUILDING ELEMENTS, TRANSPORT THEM FROM THE PLANT TO THE SITE AND TO COMPLETE THE ASSEMBLY AT THE SITE. THE CONDITION OF THE SITE, SUCH AS DRAINAGE AND SOIL BEARING CAPACITY, SHALL BE THE RESPONSIBILITY OF THE SCHOOL DISTRICT. UNLESS SPECIFICALLY CALLED FOR IN THE CONTRACT, STEPS, RAMPS, OR HANDRAILS SHALL BE THE RESPONSIBILITY OF THE CONTRACTOR.

2. ASSEMBLY OF ELEMENTS

   A. IN A LOCATION ON THE SITE AS DETERMINED BY THE SCHOOL DISTRICT, (APPROVED BY DSA) THE CONTRACTOR SHALL PLACE WOOD LEVELING STRIPS OR OTHER SUITABLE SUPPORTS AS DETAILED ON THE DRAWINGS.

   B. THE ELEMENTS SHALL BE BROUGHT TO THE SITE ON WHEEL ASSEMBLY AND TRANSFERRED TO THE PREPARED SITE. GREAT CARE SHALL BE TAKEN TO AVOID DAMAGE TO THE ELEMENTS BY RACKING OR BUMPING EACH OTHER.

   C. CONNECTION OF THE ELEMENTS TOGETHER SHALL BE DONE ACCORDING TO INSTRUCTION ON THE DRAWINGS. FLASHINGS, TRIM AND OTHER LOOSE ITEMS SHALL BE INSTALLED PER DETAILS ON THE DRAWINGS.

SECTION 23 AIR CONDITIONING

1. SCOPE OF WORK (SEE SHEET M1.7 FOR HVAC SPEC. AND NOTES)
   CONTRACTOR SHALL PROVIDE ALL LABOR, MATERIALS AND SERVICES TO INSTALL THE AIR CONDITIONING SYSTEM AS SHOWN ON THE DRAWINGS AND SPECIFICATIONS, INCLUDING A/C UNITS AND ACCESSORIES, REMOTE THERMOSTAT, GRILLS AND POWER WIRING COMPLETE TO LOAD CENTER. CONTRACTOR SHALL INSTRUCT OWNER'S OPERATORS ON OPERATION AND MAINTENANCE OF A/C SYSTEM.

2. EQUIPMENT
   SEE NOTE ON FLOOR PLAN FOR SIZE AND TYPE.

3. WORKMANSHIP
   UNITS SHALL BE INSTALLED COMPLETE AND OPERATING WITH ALL ACCESSORIES IN ACCORDANCE WITH THE MANUFACTURER'S INSTRUCTIONS.

SECTION 26 ELECTRICAL

1. SCOPE OF WORK

   A. CONTRACTOR SHALL PROVIDE ALL LABOR, MATERIALS AND SERVICES FOR ELECTRICAL INSTALLATION COMPLETE WITH ASSOCIATED EQUIPMENT AND FIXTURES, IN OPERATING CONDITION READY FOR USE. THE WORK INCLUDES: LIGHT AND POWER SYSTEMS, LIGHTING FIXTURES COMPLETE WITH LAMPS, CONNECTIONS AND DISCONNECTS TO A/C EQUIPMENT, EMERGENCY VOICE ALARM COMMUNICATION SYSTEMS (EVACS).

   B. PROVIDE CONDUIT WITH PULL STRINGS AND JUNCTION BOXES FOR AUTOMATIC DETECTION FIRE ALARM SYSTEM AND NOTIFICATION PER NFPA 72.

2. MATERIALS
   ALL NEW COMPLYING WITH REQUIREMENTS OF CALIFORNIA ELECTRIC CODE AND NATIONAL FIRE PROTECTION ASSOCIATION.

   A. ELECTRIC METALLIC TUBING - COUPLING AND FLEX CONDUIT GALVANIZED OR SHERARDIZED. EXTERIOR FLEX-GALV. STEEL WITH FACTORY APPLIED P.V.C. JACKET.
   B. PANEL BOARDS - FLUSH MOUNTED.
   C. CONDUCTORS - COPPER, INSULATED FOR 600 VOLTS, TYPE THHN FOR SIZES #12 TO #6, TYPE THW FOR LARGER SIZES. MINIMUM SIZE-#14.
   D. RECEPTACLES - AS NOTED. +15" A.F.F. MIN. TO BOTTOM OF BOX
   E. CLOCK RECEPTACLE - AS NOTED.
   F. SWITCHES - AS NOTED. +48" A.F.F. MAX. TO TOP OF BOX
   G. LIGHTING FIXTURES - AS NOTED ON THE DRAWINGS.

3. WORKMANSHIP
   MATERIALS AND EQUIPMENT INSTALLED IN A SECURE, NEAT, WORKMANLIKE MANNER IN ACCORDANCE WITH CODE REQUIREMENTS. PANEL BOARD CARDS SHALL BE FILLED OUT. CONDUIT AND CABLE INSTALLED IN WALL AND CEILING SPACES. WORK PIERCING WATERPROOFED AREAS FLASHED AND SEALED TO A WATERTIGHT CONDITION. BUILDING CONDUIT/WIRING FROM FACE OF BUILDING TO SITE TERMINATION BY SITE CONTRACTOR (N.I.C.). (FLEXIBLE CONDUIT S-BEND SEALTITE).

INSPECTION

INSPECTION OF PREFABRICATED BUILDINGS IS DIVIDED INTO TWO SEPARATE FUNCTIONS:

1. IN-PLANT INSPECTION.
2. ON-SITE INSPECTION.

THE CONTRACTOR SHALL ALLOW UP TO SEVEN (7) DAYS FROM THE DATE OF PLAN APPROVAL TO OBTAIN AN IN-PLANT INSPECTOR APPROVED BY D.S.A.

IN-PLANT INSPECTION AND MATERIAL TESTING SHALL BE ACCOMPLISHED UNDER THE SUPERVISION OF THE DISTRICT ARCHITECT. THE CONTRACTOR SHALL NOTIFY THE DISTRICT ARCHITECT, DSA, AND THE DESIGNATED INSPECTOR/INSPECTION AGENCY AT LEAST 48 HOURS PRIOR TO COMMENCING WORK. THE MANUFACTURER SHALL PROVIDE THE INSPECTOR WITH FULL ACCESS TO ALL PLANT OPERATIONS INVOLVING WORK UNDER THIS CONTRACT AND SHALL ADVISE THE INSPECTOR IN ADVANCE OF THE TIME AND PLACE OF OPERATIONS THAT THE INSPECTOR WANTS TO OBSERVE TAKE PLACE. BEFORE THE BUILDING(S) ARE REMOVED FROM THE PLANT FOR DELIVERY TO THE STORAGE FACILITY, OR FROM THE STORAGE FACILITY TO THE SITE, THE INSPECTOR SHALL DETERMINE THAT THEY ARE ACCEPTABLE AND ISSUE A WRITTEN RELEASE WHICH SHALL BE IN THE FORM OF A VERIFIED REPORT (FORM SSS-6).

<u>A COPY OF THE INSPECTOR'S VERIFIED REPORT SHALL ACCOMPANY EACH BUILDING TO STORAGE OR TO THE SITE. THE INSPECTOR SHALL PUT ONE COPY IN EACH BUILDING.</u>

AMS®
American Modular Systems
787 Spreckels Ave.Manteca, CA 95336
Phone (209) 825-1921 - Fax (209) 825-7018
americanmodular.com

MODULAR MANUFACTURER PROPRIETARY STATEMENT

THESE DRAWINGS AND THE MATERIAL CONTAINED THEREIN ARE THE PROPERTY OF AMERICAN MODULAR SYSTEMS, INC. (AMS) AND SHALL NOT BE REPRODUCED, COPIED OR OTHERWISE DISPOSED OF DIRECTLY OR INDIRECTLY AND SHALL NOT BE USED IN WHOLE OR IN PART TO ASSIST IN THE MAKING OF OR FOR THE PURPOSE OF FURNISHING ANY INFORMATION FOR THE MAKING OF DRAWINGS, PRINTS, APPARATUS OR PARTS THEREOF WITHOUT THE FULL KNOWLEDGE AND WRITTEN CONSENT OF AMS. ALL PATENTABLE MATERIAL CONTAINED HEREIN AND ORIGINATING WITH AMS SHALL BE THE SOLE PROPERTY OF AMS.

PRE-CHECKED SET NAME

30' x 32' THRU 150' x 32' BUILDINGS

SITE SPECIFIC PROJECT NAME

SHEET TITLE

GENERAL NOTES

MANUFACTURER PROFESSIONAL OF RECORD ON PC

LICENSED ARCHITECT
RANDALL PATRICK CAVANAGH
No. C12631
Ren. 03-31-17
STATE OF CALIFORNIA

REGISTERED PROFESSIONAL ENGINEER
D. FRENCH
No. S3380
Exp:03/31/16
STRUCTURAL
STATE OF CALIFORNIA

05/19/2015

PROJECT SPECIFIC STATE AGENCY APPROVAL

IDENTIFICATION STAMP
DIV. OF THE STATE ARCHITECT
02 116495
AC TM FLS SS
DATE 12-18-2017

ORIGINAL PC STATE AGENCY APPROVAL

IDENTIFICATION STAMP
DIV. OF THE STATE ARCHITECT
CA. DEPT. OF GENERAL SERVICES
PC 02-113921
AC FLS SS
DATE 6/19/2015

PRE-CHECK (PC) DOCUMENT - CODE: 2013 CBC
A SEPARATE PROJECT APPLICATION FOR CONSTRUCTION IS REQUIRED

REVISIONS

REVISIONS
1
2
3
4

DRAWN BY:
SCALE: AS NOTED
DATE:

SHEET NUMBER

N1.0

02-113921 - 30'x32' - 150'x32' EXPOSED STEEL

COORDINATION OF WORK

THE CONTRACTOR IS RESPONSIBLE FOR MAKING ALL NECESSARY ARRANGEMENTS WITH THE SCHOOL DISTRICT AUTHORIZED REPRESENTATIVE FOR ACCESS TO GROUNDS AND REMOVAL OF EQUIPMENT, IF NECESSARY. THIS CONTACT SHALL BE MADE AT LEAST 48 HOURS PRIOR TO DELIVERY OF ANY MODULE. ON-SITE INSPECTION SHALL BE DONE BY THE SITE INSPECTOR. ALL WORK WHICH THE MANUFACTURER OR HIS SUBCONTRACTORS PERFORM AT THE SITE SHALL BE SUBJECT TO THE INSPECTION OF THE SITE INSPECTOR. THE MANUFACTURER WILL FURNISH THE SITE INSPECTOR WITH SUCH INFORMATION AS MAY BE NECESSARY TO KEEP HIM FULLY INFORMED AS TO PROGRESS OF WORK AND DATES WHEN SITE WORK WILL OCCUR. THE CONTRACTOR SHALL NOTIFY THE INSPECTION AGENCY AT LEAST 48 HOURS PRIOR TO COMMENCING WORK.

THE CONTRACTOR SHALL VERIFY THAT THE DISTRICT'S SITE IS READY TO RECEIVE THE CLASSROOM(S) PRIOR TO THE DELIVERY OF ANY CLASSROOM(S) BY VISITING EACH SITE (THIS MAY BE DONE BY THE INSPECTOR).

MATERIALS AND WORKMANSHIP

1. ALL CONTRACTORS SHALL CERTIFY THAT NO ASBESTOS-CONTAINING BUILDING MATERIALS WHICH EXCEED STATE AND FEDERAL MANDATED SAFE ASBESTOS LEVELS HAVE BEEN USED IN THE CONSTRUCTION OF RELOCATABLE FACILITIES.
2. ALL WORKMEN SHALL BE SKILLED AND QUALIFIED FOR THE WORK WHICH THEY PERFORM. ALL MATERIALS USED,UNLESS OTHERWISE SPECIFIED,SHALL BE NEW AND OF THE TYPES AND GRADES SPECIFIED. THE CONTRACTOR SHALL, IF REQUESTED, FURNISH EVIDENCE SATISFACTORY TO THE ARCHITECT THAT SUCH IS THE CASE.
3. CONTRACTOR'S CREWS ASSIGNED TO ANY WORK PERFORMED UNDER THIS CONTRACT SHALL INCLUDE ONE COMPETENT AND FULLY EXPERIENCED PERSON DESIGNATED AS THE RESPONSIBLE PERSON IN CHARGE. SUCH PERSON MUST BE IDENTIFIED BY NAME TO THE DISTRICT IN ADVANCE OF ANY WORK. UPON REQUEST, THE CONTRACTOR SHALL PROMPTLY FURNISH TO THE DISTRICT INFORMATION RELATING TO THIS EMPLOYEE'S EXPERIENCE.
4. WORKMANSHIP SHALL BE EQUAL OR BETTER IN QUALITY TO THAT REQUIRED BY THE CONSTRUCTION TRADES FOR A FINISHED PRODUCT. A QUALITY CONTROL SUPERVISOR, DESIGNATED BY THE MANUFACTURER, SHALL REVIEW ALL WORK IN PROGRESS AND SHALL REVIEW THE FINISHED BUILDING PRIOR TO FINAL INSPECTION TO ASSURE IT IS COMPLETE AND CORRECT. THE QUALITY CONTROL SUPERVISOR SHALL HAVE THE AUTHORITY TO HAVE MATERIALS REPLACED AND WORK REDONE IN ORDER TO CORRECT FAULTY MATERIALS OR WORKMANSHIP.

GENERAL DESIGN REQUIREMENTS

1. SO THAT (3) MODULES UP TO (15) APPROXIMATELY 10' x 32' MODULES DESIGNED MAY BE JOINED TOGETHER TO FORM A COMPLETE STRUCTURE TO MAINTAIN A POSITIVE ALIGNMENT OF FLOORS, WALLS, AND ROOF AND TO PERMIT SIMPLE NON-DESTRUCTIVE DETACHMENT FOR FUTURE RELOCATION.
2. EACH MODULE SHALL BE PERMANENTLY IDENTIFIED WITH (2) IMPRINTED (STAMPED NOT ENGRAVED) METAL IDENTIFICATION TAGS 3"x1-1/2" MINIMUM SIZE WITH THE FOLLOWING INFORMATION:
   A. MANUFACTURER'S NAME AND BUILDING SERIAL NUMBER.
   B. DESIGN WIND SPEED / EXPOSURE
   C. DESIGN SEISMIC S_S VALUE / SITE SEISMIC S_S VALUE
   D. DESIGN ROOF LIVE LOAD
   E. DESIGN FLOOR LIVE LOAD
   F. D.S.A. APPLICATION NUMBER
3. 2-TAGS PER MODULE: ONE ON EXTERIOR, AND ONE ON MODULE BEAM AT FRONT OF BUILDING ABOVE CEILING.
4. EACH MODULE SHALL BE CAPABLE OF RESISTING ALL VERTICAL AND LATERAL LOADS DURING TRANSPORTATION AND RELOCATION. (NORMAL INDUSTRY PRACTICE FOR BRACING MODULES DURING TRANSPORTATION AND RELOCATIONS IS ACCEPTABLE.) WHEN MODULES ARE ASSEMBLED JOINTS SHALL BE SEALED WITH REMOVABLE CLOSING STRIPS OR OTHER METHOD TO PRESENT A FINISHED APPEARANCE AND BE PERMANENTLY WATERPROOF.
5. EACH MODULE SHALL BE SUFFICIENTLY RIGID TO BE JACKED UP AT THE FRONT AND BACK CORNERS FOR RELOCATION WITHOUT DAMAGE OR THE MODULE SHALL HAVE LIFT LUGS AT FRONT AND BACK LOCATED AS REQUIRED SO THAT THE MODULE MAY BE JACKED UP FOR RELOCATION IN ONE PIECE WITHOUT ADDITIONAL SUPPORTS OF ANY TYPE. EVIDENCE OF EXCESSIVE BOWING DURING THE INSTALLATION OF THE MODULES WHICH, IN THE OPINION OF THE AGENCY ARCHITECT OR STRUCTURAL ENGINEER, CAUSES EXCESSIVE WORKING AT ANY JOINT OR COMPROMISES THE STRUCTURAL INTEGRITY OF THE MODULE SHALL BE SUFFICIENT REASON FOR REJECTION OF THE MODULE.
6. FINISH AND BASE MATERIALS AT EACH MODULE SHALL TERMINATE AT INTERIOR MODULE JOINTS IN A MANNER TO JOIN FLUSH AND TIGHT WITH SAME MATERIAL IN ADJACENT MODULE SO THE MODULE MAY BE RELOCATED WITH MINIMUM CUTTING AND PATCHING.

MARKERBOARD SPECIFICATIONS

MARKERBOARDS SHALL BE 24 GA. PORCELAIN STEEL FACING SHEET SUITABLE TO ACCEPT DRY ERASE FELT MARKERS. THE FACING SHEET SHALL BE LAMINATED TO PARTICLE BOARD SUBSTRATE WITH A MINIMUM DENSITY OF 45lbs./cu.ft. THE PANEL SHALL HAVE A FOIL BACKING. THE PANELS SHALL HAVE EXTRUDED ALUMINUM MOLDING AND CHALKRAIL WITH A MINIMUM OF 2 15/16" PROJECTION FROM THE FACE OF PANEL. THREE MAP HOOKS WITH CLIPS PER PANEL SHALL BE PROVIDED. ONE FLAG HOLDER, 1/2" SIZE, SHALL BE PROVIDED FOR EACH CLASSROOM. EACH CLASSROOM SHALL HAVE 2 EACH 4'x8' PANELS INSTALLED SIDE BY SIDE TO MAKE A 4'x16' PANEL, CENTERED ON THE WALL.

REFERENCE BRANDS: CHATFIELD-CLARKE Co, Inc. SERIES 500 OR NELSON ADAMS Co. NACO SERIES 60.

INTERIOR

1. FLOOR: CARPETS – CARPET PER STATE OF CALIFORNIA SPEC COMPLYING WITH GROUP 1 TYPE A, OR TYPE B CLASS 2, DENSITY 4600, DIRECT GLUE DOWN. (CARPET SHALL BE SECURELY ATTACHED, HAVE FIRM CUSHION, PAD OR BACKING OR NONE AT ALL AND HAVE A LEVEL LOOP, TEXTURED LOOP, LEVEL-CUT PILE OR LEVEL-CUT/UNCUT PILE TEXTURE. THE MAXIMUM PILE HEIGHT SHALL BE 1/2" INCH. CARPET EDGE TRIM SHALL COMPLY WITH SECTION 11B302.2) GROUP 1 TYPE A, CLASS 26. COLOR WILL BE SELECTED BY ARCHITECT AFTER AWARD OF BID. THE CARPET DENSITY SHALL BE 4600 MINIMUM. PILE YARN SHALL BE BRANDED NYLON. NO CROSS SEAMS SHALL BE ALLOWED. PILE HEIGHT 1/2" MAX.
2. BASE: RESILIENT COVE BASE – BEST QUALITY, MOULDED RUBBER, 1/8" THICK, 4" HIGH MOULDED TOP SET COVE. PROVIDE PREFORMED BASE FOR SQUARE EXTERNAL CORNERS AND PREFORMED END STOPS WHERE BASE DOES NOT ABUT. SOLID COLOR AS MANUFACTURE BY "JOHNSONITE CO.", FLEXCO, OR EQUAL. APPLY COVE TO COMPLETE PERIMETER OF CLASSROOM.
3. INTERIOR WALLS SHALL BE VINYL COVERED TACKBOARD (U.O.N.) APPLIED IN ONE CONTINUOUS LENGTH FROM FLOOR TO CEILING. THE TACKBOARD SHALL BE INDUSTRIAL INSULATION BOARD MANUFACTURED SPECIFICALLY AS A SUBSTITUTE FOR VINYL COVERED WALL PANELS. THE BOARD SHALL BE ASPHALT FREE, SHALL HAVE AN IRONED-ON COATING AND SHALL HAVE A MINIMUM DENSITY OF 18 LBS. PER FOOT. THE VINYL COATING SHALL BE MADE OF VIRGIN VINYL CALENDERED BASE COLOR, WEIGHING A MINIMUM OF 8 OZ. PER SQUARE YARD. THE COATING BACKING SHALL BE SHEETING OR NON-WOVEN FABRIC. THE VINYL COATING SHALL BE MECHANICALLY LAMINATED, WITH THE LONG EDGES WRAPPED, TO THE TACKBOARD. TACKBOARD SHALL BE APPLIED OVER 1/2" SHEETROCK OR OSB SHEATHING. THE VINYL WALL COVERED PANEL SHALL HAVE A CLASS III FLAME SPREAD RATING. THE PANEL SHALL BE APPROVED FOR CLASSROOM USE BY THE CALIFORNIA STATE FIRE MARSHAL. REFERENCE BRAND: VINYL COVERED TACKBOARD AS MANUFACTURED BY CHATFIELD-CLARKE OR COMPARABLE. CARE SHALL BE TAKEN IN MOUNTING THE TACKBOARD SO THAT THE TEXTURE OF ALL PANELS WILL HAVE THE SAME ORIENTATION AND COLOR MATCH.
4. CEILING: SUSPEND T-BAR SYSTEM, SEE SHEET M1.3 FOR DETAILS, MATERIALS AND INSTALLATION PER ASTM C 635, ASTM C636 AND IR 25-2.13 INCLUSIVE AS APPLICABLE TO CLASSROOMS. PANELS SHALL BE 5/8" MINIMUM THICK, MINERAL FIBERBOARD OR VINYL-FACED FIBERGLASS LAY-IN PANELS SQUARE EDGE ASTM FLAME SPREAD CLASS 1. LIGHT REFLECTION 75% MINIMUM. NOISE REDUCTION COEFFICIENT OF 0.65 MINIMUM. MAXIMUM SMOKE DENSITY NOT TO EXCEED 450.
5. THE INTERIOR ENVIRONMENT SHALL BE ASSEMBLED WITH PRODUCTS THAT CONTRIBUTE TO A HEALTHY INDOOR AIR QUALITY (IAQ). THE FOLLOWING SHALL COMPLY TITLE 24, PART 11 ("CAL-GREEN"), SECTION 5.504.4.

A. ADHESIVES, SEALANTS AND CAULKS	5.504.4.1
B. PAINTS AND COATINGS	5.504.4.3
C. AEROSOL PAINTS AND COATINGS	5.504.4.3.1
D. CARPET SYSTEMS	5.504.4.4
E. CARPET CUSHION	5.504.4.4.1
F. COMPOSITE WOOD PRODUCTS	5.504.4.5
G. RESILIENT FLOORING SYSTEMS	5.504.4.6
H. HVAC FILTER (MERV RATING OF 8+)	5.504.5.3.1

6. FLAME/SMOKE SPREAD:

WALL FINISH MATERIAL	PIPE INSULATION FLAME
FLAME SPREAD MAX = 200	SPREAD MAX = 25
SMOKE DENSITY MAX = 450	SMOKE DENSITY MAX = 450
BUILDING INSULATION FLAME	DUCT INSULATION FLAME
SPREAD MAX = 25	SPREAD MAX = 25
SMOKE DENSITY MAX = 450	SMOKE DENSITY MAX = 50

DOORS & WINDOWS

1. EXTERIOR DOORS: METAL DOORS – 3'-0"x7'-0" HOLLOW METAL DOOR CONSTRUCTION OF 1 SHEET OF 18 GA. GRADE II STEEL ASSEMBLED PER CS242 MINIMUM, AND REINFORCED WITH 20 GA. MINIMUM. FILL DOOR SPACES WITH MINERAL WOOL OR OTHER INSULATION. (REINFORCE BOTH FACES FOR CLOSURE.) PROVIDE FLUSH TOP ON DOORS. HARDWARE REINFORCEMENT SHALL BE 10 GA. MIN FOR HINGES, DOOR FRAME SHALL BE 16 GA. PRESSED STEEL FRAME ASTM A366 & C5242. HARDWARE REINFORCEMENT SHALL BE 10 GA. PLATE. FRAMES SHALL BE DESIGNED WITH INTEGRAL STOP AND TRIM. PROVIDE (3) ANCHORS PER JAMB PLUS ADJUSTABLE FLOOR ANCHOR. DOOR HARDWARE SHALL BE LOCKABLE-FROM THE INSIDE PER DOOR USED OF FIVE OR MORE OCCUPANCY CBC 1008.1.11
2. EXTERIOR WINDOWS: PROVIDE ANODIZED ALUMINUM FRAME 5/8" MINIMUM DUAL PANE WINDOW UNITS, AS SHOWN ON FLOOR PLANS. THE 5/8" DIMENSION IS THE MINIMUM THICKNESS FOR THE DUAL GLAZED WINDOW PANEL CONSISTING OF TWO LITES OF GLASS AND THE AIR SPACE.
3. GLAZING MATERIAL SHALL BE: EXTERIOR LITE – 3/16" MINIMUM TEMPERED GLASS OR LAMINATED AS – 1 GLASS OF SOLAR GRAY GLARE REDUCING TYPE WITH A LIGHT TRANSMISSION FACTOR OF 45% MAXIMUM. INTERIOR LITE – 1/8" MINIMUM CLEAR TEMPERED. MINIMUM AIR SPACE SHALL BE 1/4" SPACE – BENT OR SEALED CORNER ALUMINUM WITH DESICCANT FILL SEALER – BUTYL PRIMARY SEAL AND POLYSULFIDE OR SILICONE SECONDARY SEAL. CERTIFICATION – ALL GLAZING TO BE CERTIFIED IN ACCORDANCE WITH ASTM E-773, E-774.
4. HEADER HEIGHT SHALL BE THE SAME AS THE DOOR. ALL OPERABLE SASH SHALL HAVE ALUMINUM SCREENS. WINDOWS SHALL NOT BE MOUNTED TO THE EXTERIOR OSB SURFACE. ALL WINDOWS SHALL MEET THE AAMA GS101-88 VOLUNTARY SPEC. FOR ALUMINUM PRIME WINDOWS AND SLIDING GLASS (ANS1), COMMERCIAL GRADE.

HARDWARE

1. EXTERIOR DOOR
   A. HINGES: HAGER 4-1/2" x 4-1/2" BUTTS, BB1279 US26D, 1-1/2 PAIR EACH DOOR WITH SET SCREW I BARREL AND BALL BEARING DESIGN, OR APPROVED EQUAL.
   B. EXTERIOR LOCKSET: SCHLAGE ND95PD, CORBIN, YALE OR EQUIVALENT. ALUM. FINISH. PANIC BARS/PULL HANDLE TYPE VON DUPRIN 22L (PULL ON EXT.) OR CORBIN, YALE OR EQUIVALENT. ALUM. FINISH. PANIC BARS ARE ONLY REQUIRED WHERE THE OCCUPANT LOAD IS 50 OR MORE. DOOR HARDWARE SHALL BE LOCKABLE-FROM THE INSIDE PER DOOR USED OF FIVE OR MORE OCCUPANCY CBC 1008.1.11
   C. CLOSER: NORTON 8500DA OR 8500BF SERIES, LCN 1460 DEL SERIES OR EQUAL.
   D. WEATHERSTRIPPING: ALL EXTERIOR DOORS SHALL BE WEATHERSTRIPPED WITH PEMKO 299D, ULTRA WS007 OR EQUAL, AT DOOR JAMBS AND HEAD.
   E. THRESHOLD: THRESHOLD SHALL BE PEMKO 271 AV 5" ALUMINUM WITH PEMKO 216 AV ULTRA TH042 DOOR BOTTOM.
   F. DOORSTOP: QUALITY #44, OR EQUAL. FLOOR STOPS @ 4" MAX FROM WALL.

HARDWARE continued

G. INTERIOR LOCKSET:

STUDENT TOILETS	INTERIOR PASSAGE COPPER CREEK 6220-PASSAGE w/ ADA LEVER OR 6231-RESTROOM w/ ADA LEVER
OFFICES	INTERIOR ENTRY/OFFICE COPPER CREEK 6241-ENTRY/OFFICE w/ ADA LEVER
CUSTODIAL	INTERIOR STOREROOM COPPER CREEK 6250-STOREROOM w/ ADA LEVER
PUBLIC TOILETS	EXTERIOR DOOR LOCKSET RHODES SCHLAGE ND95PD w/ LEVER

FIRE EXTINGUISHER

1. EACH CLASSROOM SHALL BE EQUIPPED WITH PRESSURE TYPE FIRE EXTINGUISHERS WITH 2A10BC UL RATING. MOUNT ON THE INTERIOR WALL OF THE BUILDING NEAR THE DOORWAY(S) AT A MAXIMUM HEIGHT OF 4 FEET TO THE TOP OF THE OPERATING HANDLE, AND THE BOTTOM OF F.E. MOUNTED 27" OR LESS A.F.F. FIRE EXTINGUISHERS SHALL BE TOTALLY CHARGED AND HAVE A DIAL INDICATING THE STATE OF CHARGE. PROVIDE 'K' TYPE FIRE EXTINGUISHER AT KITCHEN CLASSROOM.

ACCESSIBILITY STANDARDS

REFERENCE: 2016 CALIFORNIA BUILDING CODE (TITLE 24, PART 2, CCR), CHAPTER 11B "ACCESSIBILITY TO PUBLIC..."

SECTION 11B-206.2 BUILDING ACCESSIBILITY, GENERAL
1. AT LEAST ONE ACCESSIBLE ROUTE SHALL CONNECT ALL BUILDINGS, ELEMENTS, AND AREAS, AND EACH FLOOR INCLUDING MEZZANINES.

SECTION 11B-208.1 PARKING SPACES REQUIRED
1. THE WORDS "NO PARKING", IN 12" MINIMUM HIGH WHITE LETTERS, SHALL BE PAINTED ON THE PAVEMENT WITHIN ALL PARKING ACCESS AISLES, READABLE FROM THE VEHICULAR WAY. VAN PARKING ACCESS AISLES SHALL BE PLACED ON THE PASSENGER SIDE OF THE VEHICLE. (SEE CBC SECTION 11B-502.3 FOR ACCESS AISLES.)
2. RAMPS MAY NOT ENCROACH INTO ANY REQUIRED ACCESS AISLE.
3. PARKING SPACE ACCESS AISLES SHALL NOT EXCEED 1:48 SLOPE IN ANY DIRECTION.
4. AT EXISTING SITES, ANY ROUTE WHICH EXCEEDS A 1:48 SLOPE MAY REQUIRE REMOVAL AND REDESIGN PER THE PATH OF TRAVEL (P.O.T.) PROVISIONS OF CBC SECTION 11B-202, IN ORDER TO APPROVE THE BUILDING PLACEMENT.

SECTION 11B-216 SIGNAGE
(ALSO REFER TO SECTIONS 11B-703, 1007.9, 1007.10, 1022.9)
SIGNAGE IS REQUIRED:
1. TO IDENTIFY PERMANENT ROOMS & SPACES
2. TO PROVIDE DIRECTIONS AND INFORMATION ABOUT SPACES & FACILITIES
3. TO IDENTIFY MEANS OF EGRESS
   A. AREAS OF REFUGE AND AREA FOR ASSISTED RESCUE (PER 1007.9 AND 1007.11)
   B. DIRECTIONS TO AN EXIT (PER 1007.10)
   C. DELAYED EGRESS LOCKS (PER 1008.1.9.7 ITEM 5 AND 5.1)
   D. EXIT WAYS (PER 1011.4)
      - AT EACH GRADE LEVEL EXTERIOR EXIT DOOR
      - AT AN EXIT BY MEANS OF A STAIRWAY OR RAMP ("EXIT STAIR DOWN" OR "EXIT RAMP DOWN")
      - AT AN EXIT ROUTE VIA ENCLOSURE, PASSAGEWAY, CORRIDOR, HALLWAY, ETC.
      - OTHER HORIZONTAL WAYS WHERE THE EXIT OR EXIT PATH IS NOT IMMEDIATELY VISIBLE (PER 1011.1)
4. TO IDENTIFY PARKING SPACES
5. TO IDENTIFY ENTRANCES OR ROUTE TO AN ACCESSIBLE ENTRANCE
6. TO IDENTIFY ELEVATORS
7. TO IDENTIFY TOILET ROOMS
8. TO IDENTIFY PUBLIC TELEPHONES, TTY and ASSISTIVE LISTENING SYSTEMS

SIGNS, WHERE LOCATED WITHIN AN ACCESSIBLE ROUTE, MOUNTED LESS THAN 80" ABOVE THE FINISHED FLOOR, MUST HAVE ROUNDED EDGES OR AN EASED RADIUS MINIMUM OF 0.125".

SECTION 11B-404.2.8 DOOR CLOSING SPEED
1. THE SWEEP PERIOD OF ACCESSIBLE DOORS SHALL BE 5 SECONDS MINIMUM, FROM AN OPEN DOOR POSITION OF 90 DEGREES, TO A DOOR POSITION OF 12" FROM THE LATCH.

SECTION 11B-404.2.9 DOOR OPENING FORCE
1. THE EFFORT TO OPEN ANY DOOR SHALL NOT EXCEED 5LBS, EXCEPT FIRE DOORS, WHICH SHALL NOT EXCEED 15LBS FORCE.

SECTIONS 11B-404.2.4.3 RECESSED DOORS
1. DOORS RECESSED 8" OR MORE SHALL HAVE STRIKE EDGE CLEARANCES IN ACCORDANCE WITH FIGURE 11B-404.2.4.3.

SECTION 11B-405.5 RAMP WIDTH
1. THE CLEAR WIDTH OF A RAMP SHALL BE 48" MINIMUM.

SECTION 11B-505 HANDRAILS
1. THE TOP OF THE GRIPPING SURFACE OF HANDRAILS SHALL BE BETWEEN 34" AND 38", MEASURED VERTICALLY FROM WALKING SURFACES AND STAIR NOSINGS.
2. HANDRAILS SHALL HAVE AT LEAST 1-1/2" CLEARANCE ALL AROUND.
3. HANDRAILS SHALL EXTEND BEYOND, AND IN THE SAME DIRECTION, OF STAIRS AND RAMPS.

SECTION 11B-608.5 WATER CONTROLS
1. CONTROLS TO OPERATE A WATER FAUCET OR OUTLET SHALL BE A SINGLE-LEVER DESIGN, CAPABLE OF BEING OPERATED WITH A SINGLE HAND, AND SHALL NOT REQUIRE TIGHT GRASPING, PINCHING, OR TWISTING OF THE WRIST.
2. THE FORCE REQUIRED TO OPERATE CONTROLS SHALL NOT EXCEED 5 LBS.

SECTION 11B-604 TOILET ROOMS AND BATHING ROOMS
1. AN ACCESSIBLE TOILET STALL SHALL HAVE A MINIMUM WIDTH OF 60" AND SHALL BE EQUIPPED WITH A DOOR THAT HAS AN AUTOMATIC-CLOSING DEVICE, AND SHALL HAVE A CLEAR, UNOBSTRUCTED OPENING WIDTH OF 32 INCHES WHEN LOCATED AT THE END AND 34 INCHES WHEN LOCATED AT THE SIDE, WITH THE DOOR POSITIONED AT AN ANGLE OF 90 DEGREES FROM ITS CLOSED POSITION.
2. THE INSIDE AND OUTSIDE OF THE ACCESSIBLE COMPARTMENT DOOR SHALL BE EQUIPPED WITH A LOOP OR U-SHAPED HANDLE IMMEDIATELY BELOW THE LATCH. THE LATCH SHALL BE FLIP-OVER STYLE, SLIDING OR OTHER HARDWARE NOT REQUIRING THE USER TO GRASP OR TWIST.
3. EXCEPT FOR DOOR-OPENING WIDTHS AND DOOR SWINGS, A CLEAR, UNOBSTRUCTED ACCESS OF NOT LESS THAN 44 INCHES SHALL BE PROVIDED TO THE WATER CLOSET COMPARTMENTS DESIGNED FOR USE BY PERSONS WITH DISABILITIES.
4. A 27"-29" MINIMUM DIMENSION IS REQUIRED FOR LAVATORY/SINK KNEE CLEARANCE, WHICH IS THE DISTANCE FROM THE FINISH FLOOR TO THE UNDERSIDE OF THE LAVATORY/SINK.
5. TABLE 11B-604.9 SUGGESTS DIMENSIONS FOR CHILDREN'S USE.

LIGHT GAUGE METAL STUDS & COLD FORMED STEEL

1. ALL LIGHT GAUGE METAL STUDS & COLD FORMED STEEL SHALL BE FORMED FROM STEEL THAT CORRESPONDS TO THE MINIMUM REQUIREMENTS OF THE "AISI S100-07/S2-10
2. ALL GALVANIZED STUDS, JOISTS, TRACK, BRIDGING AND ACCESSORIES SHALL BE FORMED FROM STEEL HAVING A GALVANIZED COATING MEETING THE REQUIREMENTS OF ASTM A653.
3. CUSTOM FORMED SHAPES SHALL BE BENT FROM ASTM A1011 STEEL SHEETS.
4. STUD AND TRACK DESIGNATIONS ARE BASED ON STEEL STUD MANUFACTURERS ASSOCIATION. ICC-ES EVALUATION REPORT ESR-3064P.
5. GALVANIZED FRAMING PRODUCTS SHALL BE COATED IN ACCORDANCE WITH REQUIREMENTS OF ASTM A653. PRODUCTS WILL BE FURNISHED WITH A G-60 OR EQUIVALENT COATING IF SPECIFIED, AND SHALL BE IN CONFORMANCE WITH ASTM C-955, OTHERWISE, G-40 OR EQUIVALENT COATING WILL BE PROVIDED.

SCREWS FOR STEEL TO STEEL CONNECTIONS

1. SCREWS FOR STEEL TO STEEL CONNECTIONS SHALL BE TEKS PER ICC ESR-1976 OR TEKS SELECT PER ICC ESR-3223 BY ITW BUILDEX, U.O.N.
   A. HEAD TYPE AS REQUIRED FOR APPLICATION.

METAL FLOOR DECK

1. SECTION PROPERTIES SHALL BE DERIVED IN ACCORDANCE WITH AISI, "SPECIFICATION FOR DESIGN OF COLD-FORMED STEEL STRUCTURAL MEMBERS, LATEST EDITION."
2. METAL DECKING IS TO BE ATTACHED TO THE STRUCTURAL FRAME IN CONFORMANCE WITH AWS D1.1 AND D1.3, "SPECIFICATION FOR WELDING SHEET STEEL IN STRUCTURES."
3. ASTM REFERENCE NUMBERS: A) ASTM A653, STEEL SHEET, ZINC-COATED (GALVANIZED) OR ZINC-IRON ALLOY-COATED (GALVANEALED) BY THE HOT-DIP PROCESS STRUCTURAL (PHYSICAL) QUALITY.
4. STEEL DECK INSTITUTE (SDI)-METAL FLOOR DECK PROFILES SHALL BE IN CONFORMANCE WITH SDI STANDARDS.
5. METAL FLOOR DECK TO BE ASC STEEL DECK:
   A. B-36, 18 GAUGE, 1½" DEEP x 36" WIDE
   B. N-32, 18 GAUGE, 3" DEEP x 24" WIDE
   C. 3-W, 18 GAUGE, 3" DEEP x 36" WIDE
6. DECK UNITS ARE TO BE FABRICATED FROM SHEET STEEL CONFORMING TO ASTM A653, Fy=38 KSI WITH A GALVANIZED COATING, G-60 OR G-90.

ABBREVIATION LEGEND

A	ACCESSIBLE
AC	ASPHALT CONCRETE
A/C	AIR CONDITIONING
ACI	AMERICAN CONCRETE INSTITUTE
ACOUS	ACOUSTICAL
ADD	ADDENDUM
ADD'L	ADDITIONAL
ADJ	ADJUSTABLE OR ADJACENT
AISC	AMERICAN INSTITUTE OF STEEL CONSTRUCTION
AISI	AMERICAN IRON AND STEEL INSTITUTE
ALT	ALTERNATE
ALUM	ALUMINUM
ANSI	AMERICAN NATIONAL STANDARDS INSTITUTE
ARCH	ARCHITECT (URAL)
ASTM	AMERICAN SOCIETY FOR TESTING AND MATERIALS
AWC	AMERICAN WOOD COUNCIL
AWPA	AMERICAN WOOD PROTECTION ASSOCIATION
AWS	AMERICAN WELDING SOCIETY
BD	BOARD
BLDG	BUILDING
BLK	BLOCK
BLKG	BLOCKING
BLW	BELOW
BM	BEAM
BN	BOUNDARY NAILING
BOT/BOTT	BOTTOM
BTWN	BETWEEN
BUR	BUILT UP ROOFING
C	CARPET
CAB	CABINET
CB	CATCH BASIN
CBC	CALIFORNIA BUILDING CODE
CCR	CALIFORNIA CODE OF REGULATIONS
CEM	CEMENT
CF	CUBIC FOOT
CJ	CONTROL JOINT
CJP	COMPLETE JOINT PENETRATION
CLG	CEILING
CLR	CLEAR
CT	CERAMIC MOSAIC TILE
CMU	CONCRETE MASONRY UNIT
CO	CLEAN OUT
COL	COLUMN
CONC	CONCRETE
CONN	CONNECTION
CONT	CONTINUOUS
CSK	COUNTERSINK
CTRD	CENTERED
CW	COLD WATER
DBL	DOUBLE
DET	DETAIL
DF	DRINKING FOUNTAIN OR DOUGLAS FIR
DIA	DIAMETER
DIAG	DIAGONAL
DIM	DIMENSION
DIV	DIVISION
DR	DOOR
DS	DOWNSPOUT
DSA	DIVISION OF THE STATE ARCHITECT
DWG	DRAWING
E	ENAMEL
(E)	EXISTING
EA	EACH
EJ	EXPANSION JOINT
ELEV	ELEVATION
ELECT	ELECTRICAL
EMBED	EMBEDMENT
EMT	ELECTRICAL MAGNETIC TUBING
EN	EDGE NAILING
ETC	ET CETERA
EQ	EQUAL
EW	EACH WAY
EXP	EXPOSURE
EXT	EXTERIOR
F	FAHRENHEIT
(F)	FUTURE
FAB	FABRICATION
FAC	FACTORY
FD	FLOOR DRAIN
FF	FINISHED FLOOR
FHWS	FLAT HEAD WOOD SCREW
FIN	FINISH
FLR	FLOOR
FLSHG	FLASHING
FN	FIELD NAILING
FND/FNDN	FOUNDATION
FOF	FACE OF FINISH
FOP	FACE OF PLYWOOD
FOS	FACE OF STUD
FRP	FIBERGLASS REINFORCED PLASTIC PANELS
FT	FOOT
FTG	FOOTING
FURR	FURRED (-ING)
GA	GAUGE
GB	GYPSUM BOARD
GL	GLASS OR GLAZING

GLV/GALV	GALVANIZED
GSM	GALVANIZED SHEET METAL
GYP	GYPSUM
HB	HOSE BIBB
HC	HOLLOW CORE
HDR	HEADER
HDW	HARDWOOD
HF	HEM FIR
HM	HOLLOW METAL (STEEL)
HOR/HORIZ	HORIZONTAL
HSS	HOLLOW STRUCTURAL SECTION (STEEL)
HT	HEIGHT
HVAC	HEATING VENTILATING AIR CONDITIONING
HW	HOT WATER
IAPMO	INTERNATIONAL ASSOCIATION OF PLUMBING AND MECHANICAL OFFICIALS
ICC	INTERNATIONAL CODE COUNCIL
ID	INSIDE DIAMETER
IN	INCH
INSUL	INSULATE (D), (ION)
INT	INTERIOR
INV	INVERT
IR	INTERPRETATION OF REGULATIONS JT JOINT
KSI	KIPS PER SQUARE INCH (KIPS = 1,000LBS)
LAM	LAMINATE(D)
LAV	LAVATORY
LB, LBS	POUND
LLH	LONG LEG HORIZONTAL
LLV	LONG LEG VERTICAL
LNDG	LANDING
LONG	LONGITUDINAL
LS	LAG SCREW
LT	LIGHT
LW	LIGHT WEIGHT
LWC	LIGHT WEIGHT CONCRETE
MATL	MATERIAL
MAX	MAXIMUM
MB	MECHANICAL BOLT
MECH	MECHANICAL
MFG	MANUFACTURING
MFR	MANUFACTURER
MIN	MINIMUM
MIR	MIRROR
MISC	MISCELLANEOUS
MM	MILLIMETER
MTL	METAL
(N)	NEW
NIC	NOT IN CONTRACT
NDS	NATIONAL DESIGN SPECIFICATION
NW	NORMAL WEIGHT
NWC	NORMAL WEIGHT CONCRETE
O/	OVER
OC	ON CENTER
OD	OUTSIDE DIAMETER
OH	OPPOSITE HAND OR OVERHANG
OPG	OPENING
OPP	OPPOSITE
OSB	ORIENTED STRAND BOARD
PL	PROPERTY LINE
PLAM	PLASTIC LAMINATE
PLAS	PLASTER
PLF	POUNDS PER LINEAR FOOT
PLT	PLATE
PLWD/PLY	PLYWOOD
PNL	PANEL
POC	POINT OF CONNECTION
PS	PRODUCT STANDARD
PSF	POUNDS PER SQUARE FOOT
PSI	POUNDS PER SQUARE INCH
PT	PRESSURE TREATED
PTDF	PRESERVATIVE TREATED DOUGLAS FIR
PTN	PARTITION
PVC	POLYVINYL CHLORIDE
R	RISER
RD	ROOF DRAIN
REF	REFERENCE
REFR	REFRIGERATOR
REINF	REINFORCING
REQ'D/REQ	REQUIRED
RES	RESILIENT
RDWD	REDWOOD
RWL	RAIN WATER LEADER
SCH/SCHED	SCHEDULE
SD	STORM DRAIN
SDSTS	SELF DRILLING SELF TAPPING SCREW
SEC	SECTION
SEP	SEPARATION
SF	SQUARE FEET
SHT	SHEET
SHTG	SHEETING
SIM	SIMILAR

SMS	SHEET METAL SCREW
SP	STRUCTURAL PLYWOOD
SPEC	SPECIFICATIONS
SQ	SQUARE
SS	STAINLESS STEEL
STAGG	STAGGERED
STN	STAIN
STD	STANDARD
STL	STEEL
STS	SELF TAPPING SCREW
STSMS	SELF TAPPING SHEET METAL SCREW
T&B	TOP AND BOTTOM
T&G	TONGUE AND GROOVE
TEMP	TEMPERED
THRU	THROUGH
TJ	TOOL JOINT
TOC	TOP OF CURB, CRICKET, OR CONCRETE
TOP	TOP OF PARAPET
TOS	TOP OF SLAB, SHEATHING, OR STEEL
TOW	TOP OF WALL
TRANS	TRANSVERSE
TS	TOP OF SHEATHING
TV	TELEVISION
TYP	TYPICAL
UON	UNLESS OTHERWISE NOTED
UNO	UNLESS NOTED OTHERWISE
VAR	VARIES
VCT	VINYL COMPOSITION TILE
VCTB	VINYL COVERED TACKBOARD
VERT	VERTICAL
VFY	VERIFY
VIF	VERIFY IN FIELD
VWC	VINYL WALL COVERING
W/	WITH
WD	WOOD
WF	WIDE FLANGE
WIN	WINDOW
W/O	WITHOUT
WS	WOODSCREW
WSCT	WAINSCOT
WT	WEIGHT
WWF	WELDED WIRE FABRIC
∠	ANGLE
@	AT
℄	CENTER LINE
ø	DIAMETER
°	DEGREES
M̸L	MODULE LINE
±	PLUS/MINUS

American Modular Systems
787 Spreckels Ave.Manteca, CA 95336
Phone (209) 825-1921 - Fax (209) 825-7018
americanmodular.com

MODULAR MANUFACTURER PROPRIETARY STATEMENT

THESE DRAWINGS AND THE MATERIAL CONTAINED THEREIN ARE THE PROPERTY OF AMERICAN MODULAR SYSTEMS, INC. (AMS) AND SHALL NOT BE REPRODUCED, COPIED OR OTHERWISE DISPOSED OF DIRECTLY OR INDIRECTLY AND SHALL NOT BE USED IN WHOLE OR IN PART TO ASSIST IN THE MAKING OF OR FOR THE PURPOSE OF FURNISHING ANY INFORMATION FOR THE MAKING OF DRAWINGS, PRINTS, APPARATUS OR PARTS THEREOF WITHOUT THE FULL KNOWLEDGE AND WRITTEN CONSENT OF AMS. ALL PATENTABLE MATERIAL CONTAINED HEREIN AND ORIGINATING WITH AMS SHALL BE THE SOLE PROPERTY OF AMS.

PRE-CHECKED SET NAME

30' x 32' THRU 150' x 32' BUILDINGS

SITE SPECIFIC PROJECT NAME

SHEET TITLE

GENERAL NOTES

MANUFACTURER PROFESSIONAL OF RECORD ON PC

LICENSED ARCHITECT RANDALL PATRICK CAVANAGH No. C12631 Ren. 03-31-17 STATE OF CALIFORNIA

REGISTERED PROFESSIONAL ENGINEER MANNY D. FR[illegible] No. S338[illegible] Exp. 03/31/[illegible] STRUCTURAL STATE OF CALIFORNIA

PROJECT SPECIFIC STATE AGENCY APPROVAL

IDENTIFICATION STAMP DIV. OF THE STATE ARCHITECT
02 116495
AC TM FLS SS
DATE 12-18-2017

ORIGINAL PC STATE AGENCY APPROVAL

IDENTIFICATION STAMP DIV. OF THE STATE ARCHITECT CA. DEPT. OF GENERAL SERVICES
PC 02-113921
AC FLS SS
DATE 6/19/2015

PRE-CHECK (PC) DOCUMENT – CODE: 2013 CBC
A SEPARATE PROJECT APPLICATION FOR CONSTRUCTION IS REQUIRED

REVISIONS

1	
2	
3	
4	

DRAWN BY:
SCALE: AS NOTED
DATE:

SHEET NUMBER

N2.0

02-113921 – 30' x 32' -150' x 32' EXPOSED STEEL

DOOR SCHEDULE

DOOR NO.	DOOR TYPE	DOOR SIZE	QUANTITY	MATERIAL	FINISH	HARDWARE SET NO.	FRAME TYPE	MATERIAL	FINISH	REMARKS
1	D1B	3'-0" x 7'-0"	3	HM	PT	A	F1A	STL	PT	HARDWARE LOCKABLE FROM THE INSIDE, SEE DOOR NOTE #3
2	D1A	3'-0" x 7'-0"	2	HM	PT	A	F1B	STL	PT	HARDWARE LOCKABLE FROM THE INSIDE, SEE DOOR NOTE #3
3	D2	6'-0" x 7'-0"	2	HM	PT	B	F3	STL	PT	HARDWARE LOCKABLE FROM THE INSIDE, SEE DOOR NOTE #3

DOOR ABBREVIATIONS

- HM – HOLLOW METAL
- AL – ALUMINUM
- S – STEEL
- SST – STAINLESS STEEL
- STL – STEEL FRAME, 16ga. FULLY WELDED
- WWF – WINDOW WALL FRAME
- SC – SOLID CORE WOOD
- HC – HOLLOW CORE WOOD
- PT – PAINTED
- CA – CLEAR ANODIZED
- BR – BRONZE ANODIZED
- CLR – CLEAR FINISH
- TM – TIMELY – BROWNTONE

DOOR NOTES

1. DOORS SHALL COMPLY WITH C.B.C. SECTION 1008.
2. CLASSROOMS ≥ 1000 S.F WILL REQUIRE PANIC HARDWARE THAT COMPLIES WITH C.B.C. SECTION 1008.1.10.
3. PER C.B.C. 1008.1.11: PROVIDE LOCKS THAT ALLOW DOORS TO CLASSROOMS AND ANY ROOM WITH AN OCCUPANCY OF FIVE OR MORE PERSONS TO BE LOCKED FROM THE INSIDE. LOCKS SHALL COMPLY WITH C.B.C. SECTION 1008.1.9.

WINDOW SCHEDULE

WINDOW TYPE	FUNCTION	QTY.	'W' WIDTH	'H' HEIGHT	FINISH	GLASS TYPE	U FACTOR	SHGC	VT MIN	MIN STC RATING	REMARKS
A	FIXED	3	6''–0"	6'–9"	CLEAR ALUMINUM	SOLAR GREY	0.780	0.430	0.37	27	INOPERABLE
B	FIXED	3	6''–0"	6'–9"	CLEAR ALUMINUM	SOLAR GREY	0.780	0.430	0.37	27	INOPERABLE

EXTERIOR LITE – 3/16" MINIMUM TEMPERED GLASS, OR LAMINATED AS 1 GLASS OF SOLAR GRAY GLARE REDUCING TYPE WITH A LIGHT TRANSMISSION FACTOR OF 45% MAXIMUM.

ROOM FINISHES SCHEDULE

ROOM NUMBER	ROOM NAME	FINISHES: FLOOR	BASE	WALLS: FRONT	REAR	RIGHT	LEFT	CEILING	CEILING HEIGHT	REMARKS
101	DEMONSTRATION KITCHEN	B	D	F	F	F	F	K	9'–0"	
102	CLASSROOM	A	D	F	F	F	F	K	9'–0"	
201	CLASSROOM	A	D	F	F	F	F	K	9'–0"	
202	CLASSROOM	A	D	F	F	F	F	K	9'–0"	

FINISH INDICATORS

- A – CARPET TILE PER STATE OF CALIF SPEC COMPLYING WITH GROUP 1, TYPE A OR TYPE B, CLASS 2, DENSITY 4600, DIRECT GLUE DOWN.
- B – VINYL SHEET FLOORING, 0.6 MIN, C.D.F. PER ASTM D 2047
- C – VCT ARMSTRONG, STANDARD, OR EXCELON
- D – TOP SET BASE. 4"
- E – TOP SET BASE. 6"
- F – WALL FINISH. 1/2" VINYL TACKBOARD CLASS 1 OVER 1/2" GYP BOARD BACKING
- G – 1/2" GYP BOARD. TAPE, PAINTED FINISH
- H – 1/2" GYP BOARD. TAPE, PAINTED FINISH
- J – 3/32" F.R.P. OVER 1/2" W.R. GYP BOARD
- K – ACOUSTICAL LAY IN GRID CEILING PANELS 2'x2' OR 2'x4'
- L – 1/2" VINYL TACKBOARD CLASS 1 OVER 5/8" TYPE "X" GYP BOARD BACKING
- M – 5/8" TYPE 'X' GYP BOARD. TAPE, TEXTURE, PAINTED FINISH
- N – CERAMIC TILE – (FULL HEIGHT AT WALLS)
- O – EXPOSED CONCRETE WITH CONCRETE SEALER
- P – CLOUD CEILING PANELS
- Q – 2x4 CEILING TILE w/ VINYL COATING

DOOR TYPES

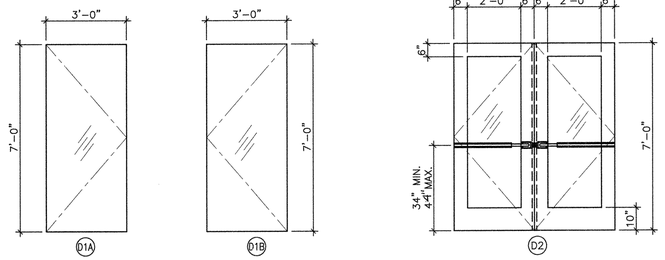

WINDOW TYPES

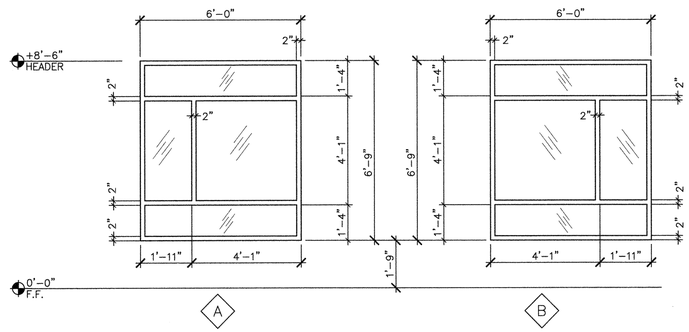

ROOM FINISHES SCHEDULE

NOT USED

DOOR FRAME TYPES

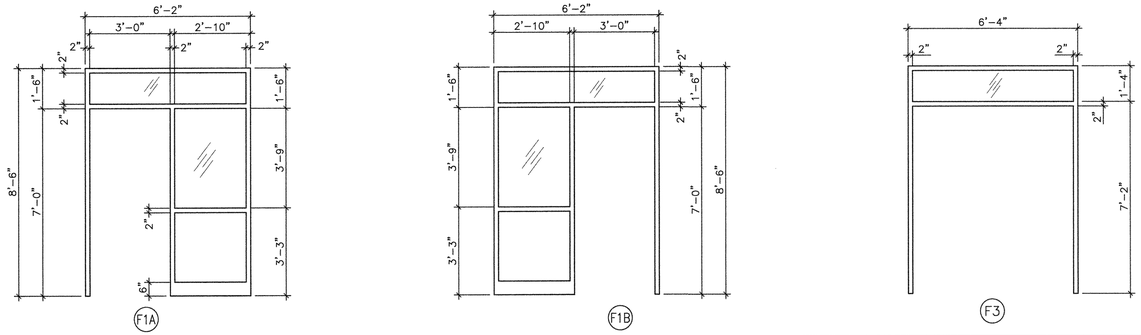

DOOR HARDWARE SCHEDULE

A	EXTERIOR DOOR LOCKSET w/ LEVER RHODES SCHLAGE ND95PD
B	EXTERIOR DOOR PANIC BAR w/PULL ON EXTERIOR VON DUPRIN VD99 (REQUIRED WHEN OCCUPANT LOAD IS 50 OR MORE)
C	~~INTERIOR PASSAGE COPPER CREEK 6220–PASSAGE w/ADA LEVER~~
D	~~INTERIOR RESTROOM COPPER CREEK 6231 RESTROOM w/ADA LEVER~~
E	~~INTERIOR ENTRY/OFFICE COPPER CREEK 6241–ENTRY/OFFICE w/~~ADA LEVER
F	~~INTERIOR STOREROOM COPPER CREEK 6250–STOREROOM w/ADA~~ LEVER
G	~~INTERIOR CLASSROOM COPPER CREEK 6260–CLASSROOM w/ADA~~ LEVER

EXTERIOR DOOR HARDWARE

1. HINGES: PEMKO CFS83HD (CONTINUOUS HINGES)
2. CLOSER: LCN 4041 EDA X NHO OR EQUAL. (5 LBS. MAX PRESSURE)
3. WEATHERSTRIPPING: ALL EXTERIOR DOORS SHALL BE WEATHERSTRIPPED WITH PEMKO 299D, ULTRA WS007 OR EQUAL, AT DOOR JAMBS AND HEAD.
4. THRESHOLD: THRESHOLD SHALL BE PEMKO 271 AV 5" ALUMINUM WITH PEMKO 216 AV ULTRA TH042 DOOR BOTTOM.
5. LOCKDOWN: INTERIOR TEACHERS' MANUAL LOCK FOR CAMPUS LOCK DOWN CRITERIA – REQUIRED FOR STATE–FUNDED SCHOOLS, PER EDUCATION CODE SECTION 17075.50 (AND ALSO CBC 1008.1.11): PROVIDE LOCKS THAT ALLOW DOORS TO CLASSROOMS AND ANY ROOM WITH AN OCCUPANCY OF FIVE OR MORE PERSONS TO BE LOCKED FROM THE INSIDE. LOCKS SHALL COMPLY WITH C.B.C. SECTION 1008.1.9.

*ADDITIONAL DOORS MAY BE REQUIRED BASED ON BUILDING LAYOUT.

NOT USED

NOT USED

American Modular Systems
787 Spreckels Ave. Manteca, CA 95336
Phone (209) 825-1921 - Fax (209) 825-7018
americanmodular.com

MODULAR MANUFACTURER PROPRIETARY STATEMENT

THESE DRAWINGS AND THE MATERIAL CONTAINED THEREIN ARE THE PROPERTY OF AMERICAN MODULAR SYSTEMS, INC. (AMS) AND SHALL NOT BE REPRODUCED, COPIED OR OTHERWISE DISPOSED OF DIRECTLY OR INDIRECTLY AND SHALL NOT BE USED IN WHOLE OR IN PART TO ASSIST IN THE MAKING OF OR FOR THE PURPOSE OF FURNISHING ANY INFORMATION FOR THE MAKING OF DRAWINGS, PRINTS, APPARATUS OR PARTS THEREOF WITHOUT THE FULL KNOWLEDGE AND WRITTEN CONSENT OF AMS. ALL PATENTABLE MATERIAL CONTAINED HEREIN AND ORIGINATING WITH AMS SHALL BE THE SOLE PROPERTY OF AMS.

PRE–CHECKED SET NAME

30' x 32' THRU 150' x 32' BUILDINGS

SITE SPECIFIC PROJECT NAME

MARIN COMMUNITY CSD - INDIAN VALLEY CAMPUS 60x32 BUILDING

SHEET TITLE

SCHEDULES

MANUFACTURER PROFESSIONAL OF RECORD ON PC

LICENSED ARCHITECT — BRIAN PATRICK ANDERSON — No. C12631 Ren. 3-31-19 — STATE OF CALIFORNIA

PROJECT SPECIFIC STATE AGENCY APPROVAL

IDENTIFICATION STAMP DIV. OF THE STATE ARCHITECT
02 I 6495
AC TM
DATE 12-18-2017

ORIGINAL PC STATE AGENCY APPROVAL

BASED ON PC# 02-113921

PRE–CHECK (PC) DOCUMENT – CODE: 2013 CBC
A SEPARATE PROJECT APPLICATION FOR CONSTRUCTION IS REQUIRED

REVISIONS

DRAWN BY:	BA
SCALE:	AS NOTED
DATE:	11/10/17

SHEET NUMBER

N3.0

02-113875 12" x 40' - 100' x 40' EXPOSED STEEL DATED: 12/4/2017 11:14 AM PLOTTED: 12/6/2017 2:29 PM

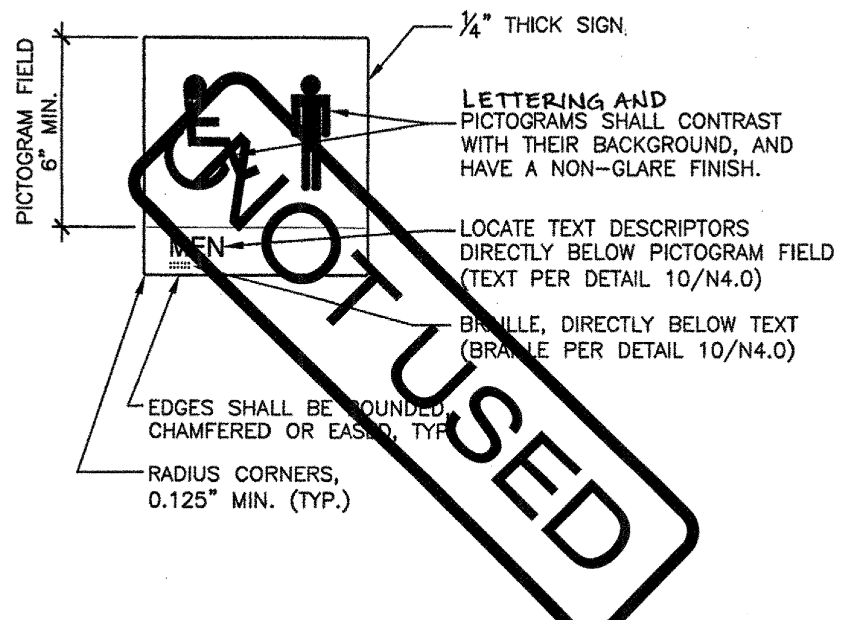

NOTES:
1. ATTACH SIGNS USING ADHESIVE AND (2) TWO FLATHEAD COUNTERSUNK SCREWS, COMPATIBLE WITH WALL MATERIAL.
2. LOCATE PER DETAIL 4/N4.0
3. SIGNS ARE NOT IN MODULAR MFR. SCOPE OF WORK.

WALL MOUNTED RESTROOM SYMBOLS-MEN NOT TO SCALE 1

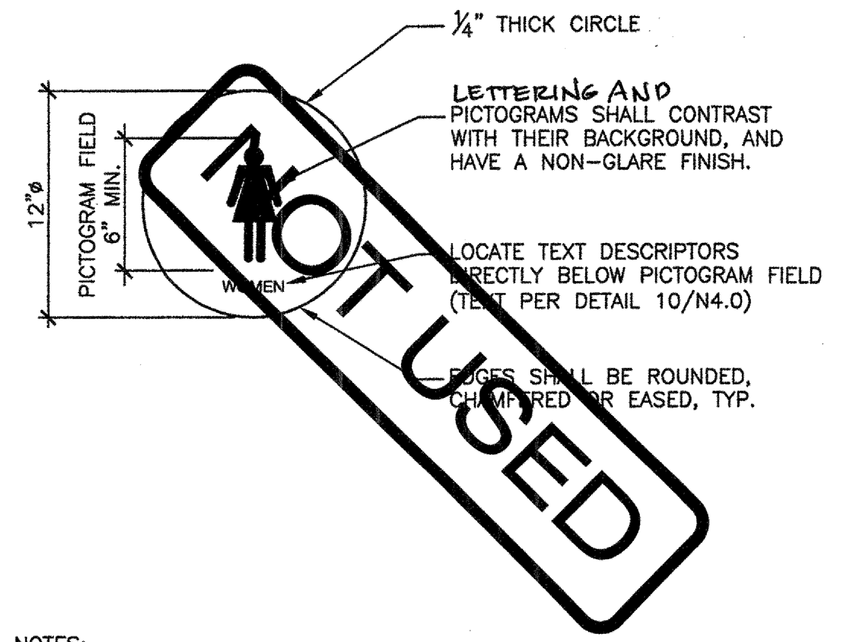

NOTES:
1. ATTACH SIGNS USING ADHESIVE AND (2) TWO FLATHEAD COUNTERSUNK SCREWS, COMPATIBLE WITH DOOR MATERIAL.
2. LOCATE PER DETAIL 4/N4.0
3. SIGNS ARE NOT IN MODULAR MFR. SCOPE OF WORK.

DOOR MOUNTED RESTROOM SYMBOLS-WOMEN NOT TO SCALE 2

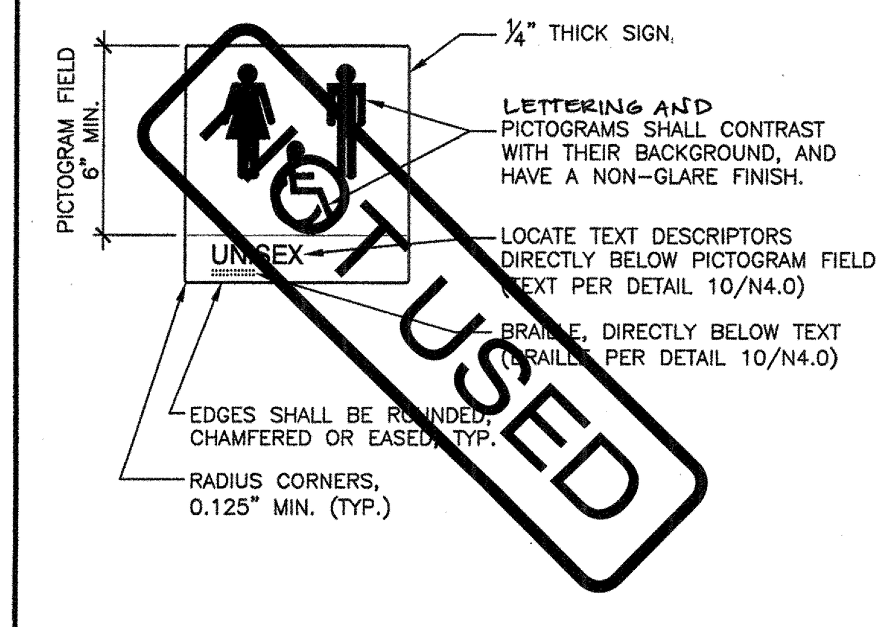

NOTES:
1. ATTACH SIGNS USING ADHESIVE AND (2) TWO FLATHEAD COUNTERSUNK SCREWS, COMPATIBLE WITH WALL MATERIAL.
2. LOCATE PER DETAIL 4/N4.0
3. SIGNS ARE NOT IN MODULAR MFR. SCOPE OF WORK.

WALL MOUNTED RESTROOM SYMBOLS-UNISEX NOT TO SCALE 3

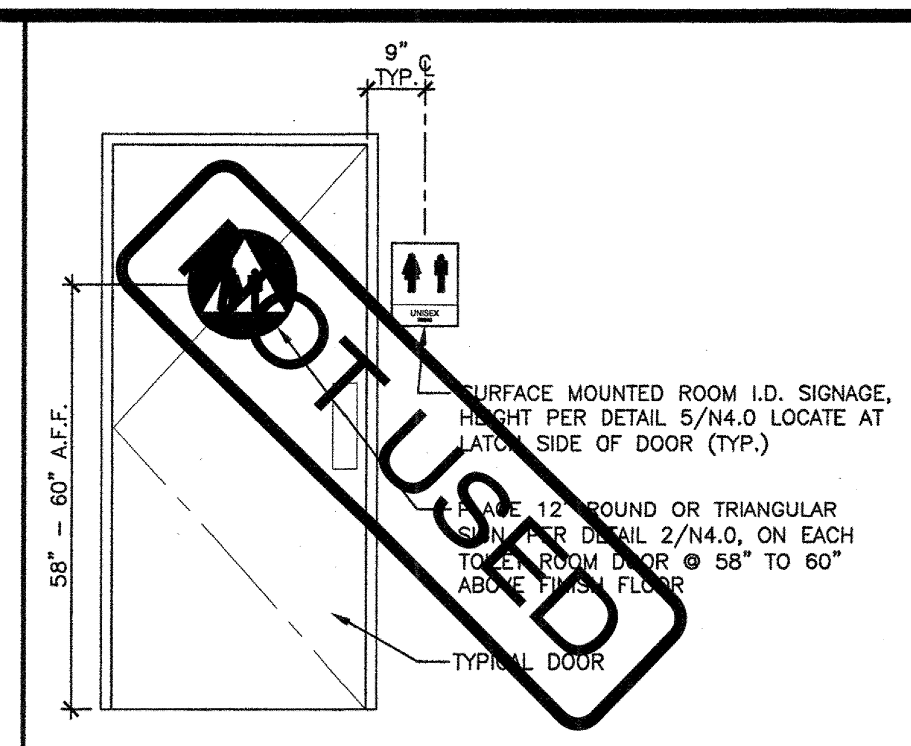

NOTE:
SIGNS ARE NOT IN MODULAR MFR. SCOPE OF WORK.

ROOM IDENTIFICATION SIGNAGE NOT TO SCALE 4

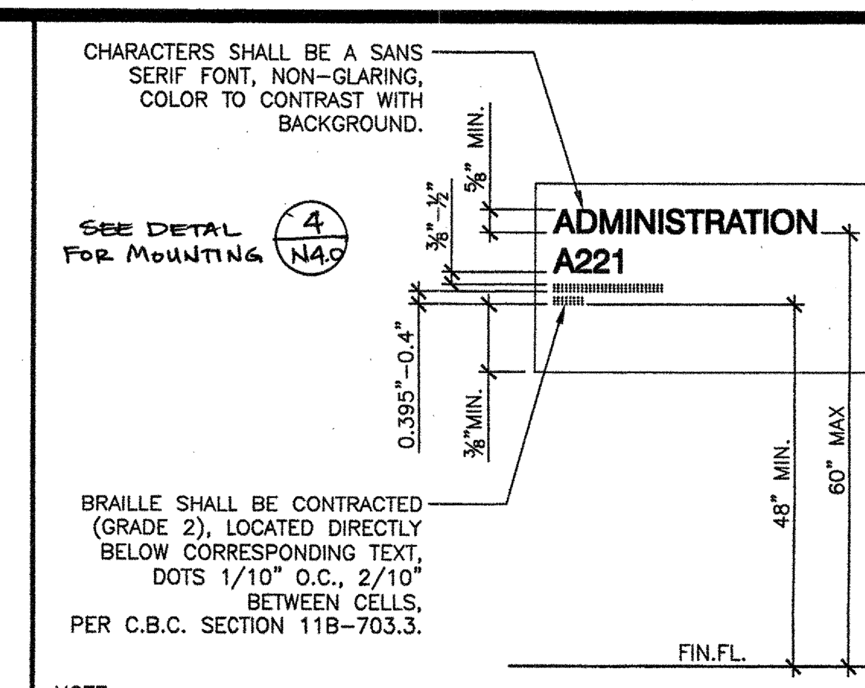

NOTE:
1. ALL REQUIRED SIGNAGE SHALL COMPLY WITH C.B.C. SECTION 11B-703.
2. FOR REQUIRED TACTILE SIGNS LOCATIONS, SEE SHEET N2.0, ACCESSIBILITY STANDARDS, "SECTION 11B-216".
3. SIGNS ARE NOT IN MODULAR MFR. SCOPE OF WORK.

PERMANENT ROOM I.D. SIGNAGE NOT TO SCALE 5

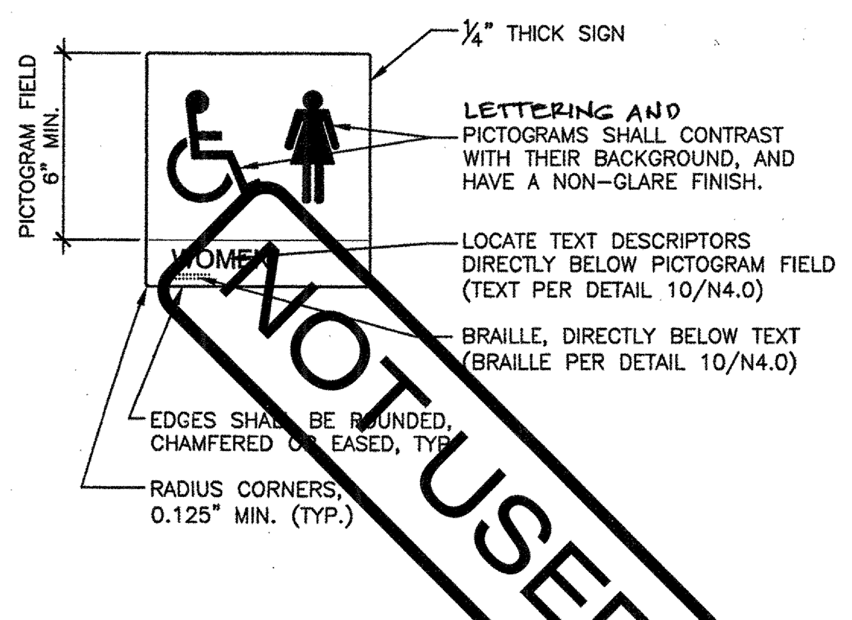

NOTES:
1. ATTACH SIGNS USING ADHESIVE AND (2) TWO FLATHEAD COUNTERSUNK SCREWS, COMPATIBLE WITH WALL MATERIAL.
2. LOCATE PER DETAIL 4/N4.0
3. SIGNS ARE NOT IN MODULAR MFR. SCOPE OF WORK.

WALL MOUNTED RESTROOM SYMBOLS-WOMEN NOT TO SCALE 6

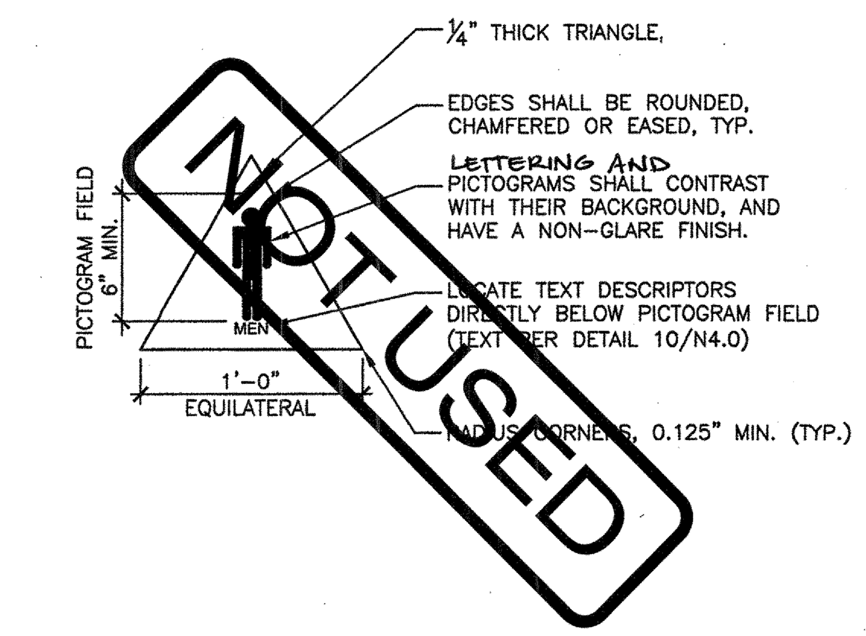

NOTES:
1. ATTACH SIGNS USING ADHESIVE AND (2) TWO FLATHEAD COUNTERSUNK SCREWS, COMPATIBLE WITH DOOR MATERIAL.
2. LOCATE PER DETAIL 4/N4.0
3. SIGNS ARE NOT IN MODULAR MFR. SCOPE OF WORK.

DOOR MOUNTED RESTROOM SYMBOL-MEN NOT TO SCALE 7

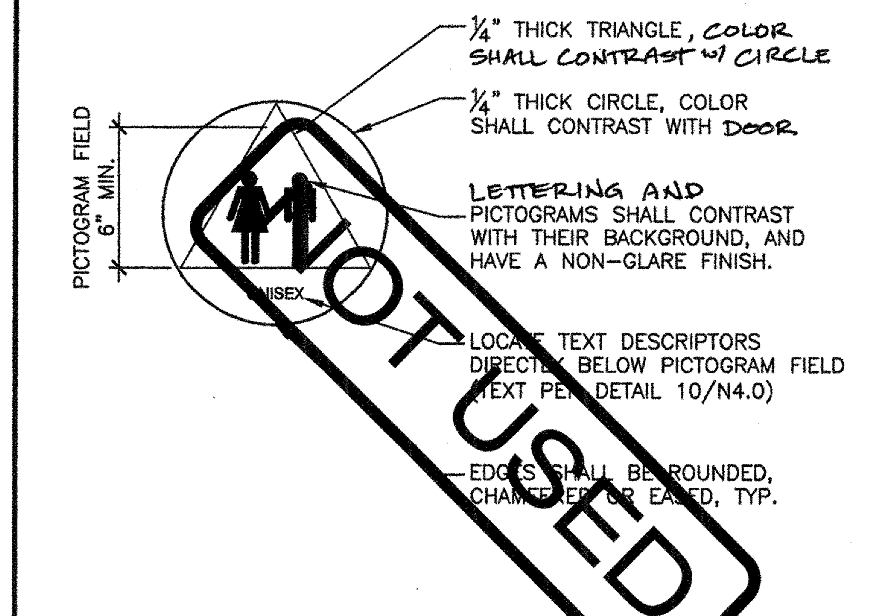

NOTES:
1. ATTACH SIGNS USING ADHESIVE AND (2) TWO FLATHEAD COUNTERSUNK SCREWS, COMPATIBLE WITH DOOR MATERIAL.
2. LOCATE PER DETAIL 4/N4.0
3. SIGNS ARE NOT IN MODULAR MFR. SCOPE OF WORK.

DOOR MOUNTED RESTROOM SYMBOLS-UNISEX NOT TO SCALE 8

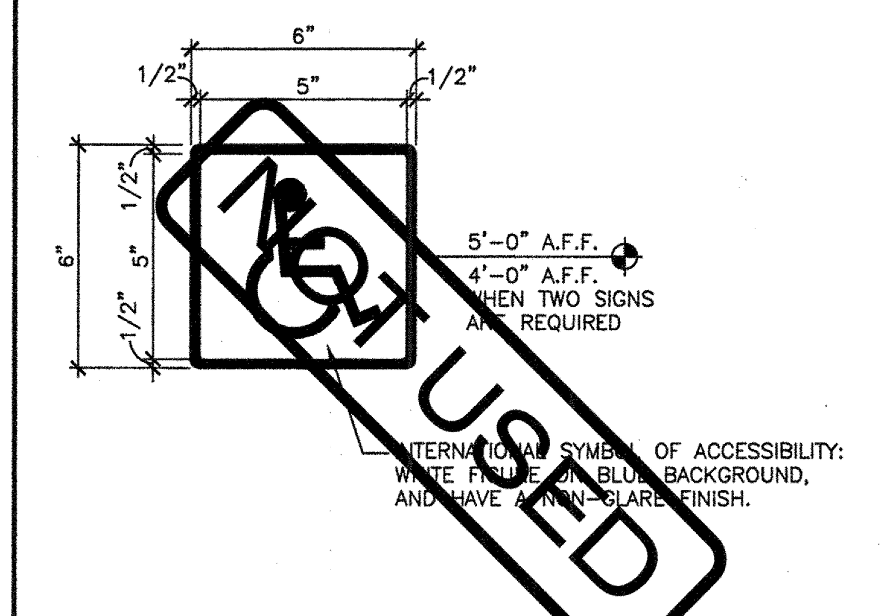

NOTES:
1. PROVIDE MECHANICAL MOUNTING w/VANDAL RESISTANT FASTENERS. PROVIDE ADHESIVE MOUNTING SYSTEM WHEN ATTACHED TO GLAZING.
2. SYMBOL PER C.B.C. SECTION 11B-703.7.2.1
3. SIGNS ARE NOT IN MODULAR MFR. SCOPE OF WORK.

INT'L SYMBOL OF ACCESSIBILITY NOT TO SCALE 9

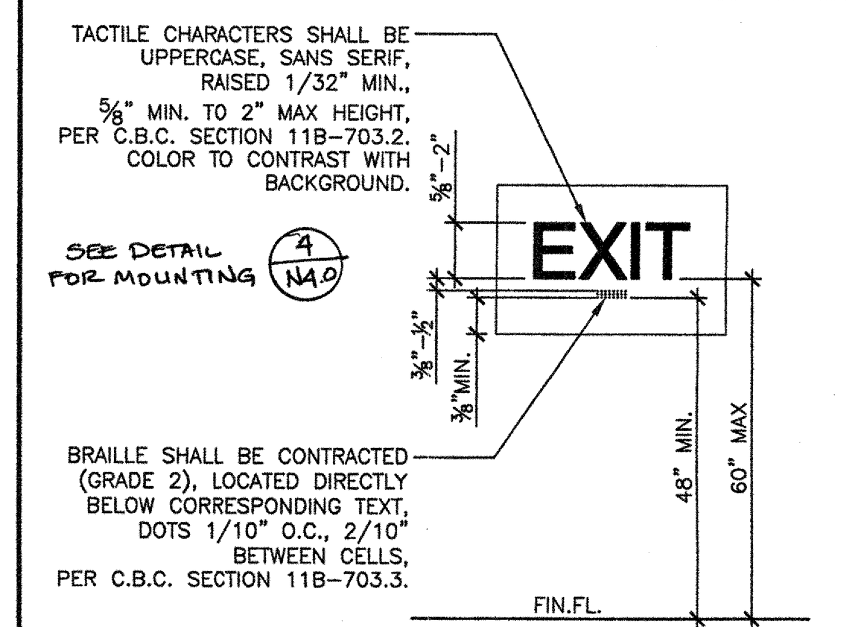

NOTE:
1. ALL REQUIRED SIGNAGE SHALL COMPLY WITH C.B.C. SECTION 11B-703.
2. FOR REQUIRED TACTILE SIGNS LOCATIONS, SEE SHEET N2.0, ACCESSIBILITY STANDARDS, "SECTION 11B-216".
3. SIGNS ARE NOT IN MODULAR MFR. SCOPE OF WORK.

TACTILE SIGNAGE REQUIREMENTS NOT TO SCALE 10

A. TYPESTYLE: 1" HIGH BLOCK 1/16" THICK ENGRAVED PLASTIC
B. MOUNTING: (4) #8x1" SCREWS. HEIGHT AS SHOWN.
C. CAPACITY POSTING PER C.B.C. SECTION 1004.3 TITLE 19 C.C.R., SECTION 3.30: "THIS ROOM SHALL BE POSTED WITH A DURABLE SIGN NEAR THE MAIN EXIT FROM THE ROOM".
D. THE SIGN SHALL BE WORDED AS FOLLOWS, WITH THE APPROPRIATE CAPACITY NUMBER:

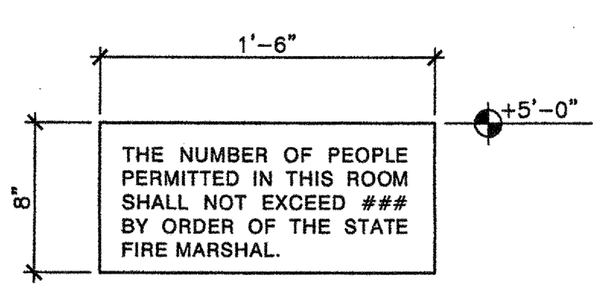

NOTE:
SIGNS ARE NOT IN MODULAR MFR. SCOPE OF WORK.

OCCUPANT LOAD SIGN NOT TO SCALE 11

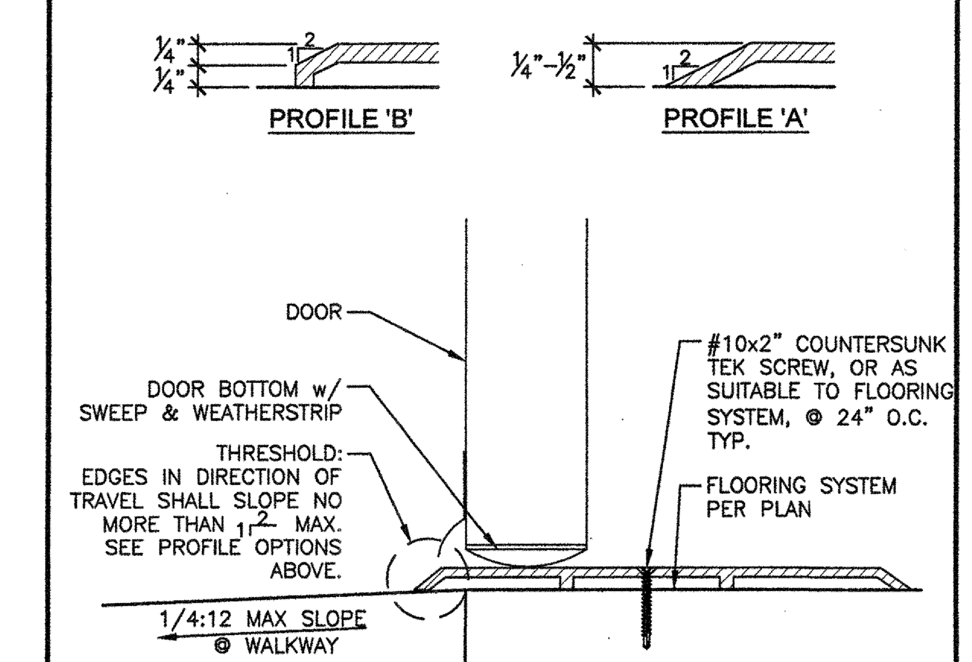

NOT TO SCALE

THRESHOLD DET @ EXTERIOR ENTRY DOOR 12

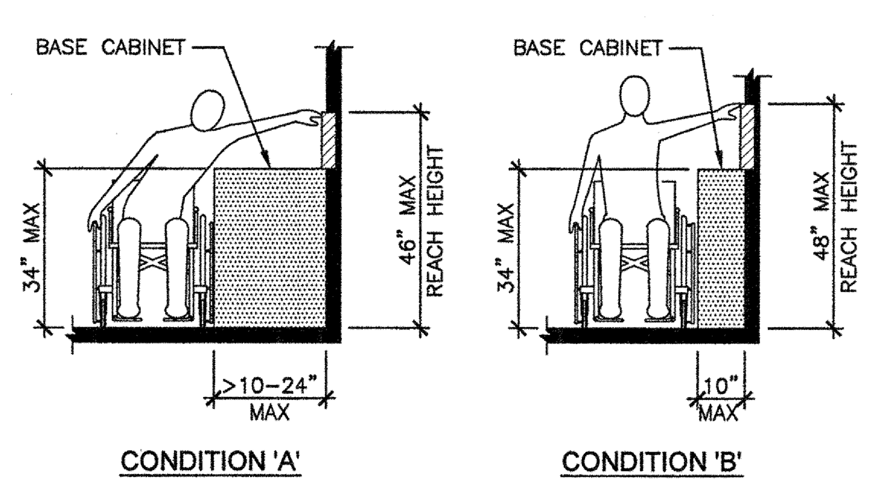

SIDE REACH AT BASE CABINET NOT TO SCALE 13

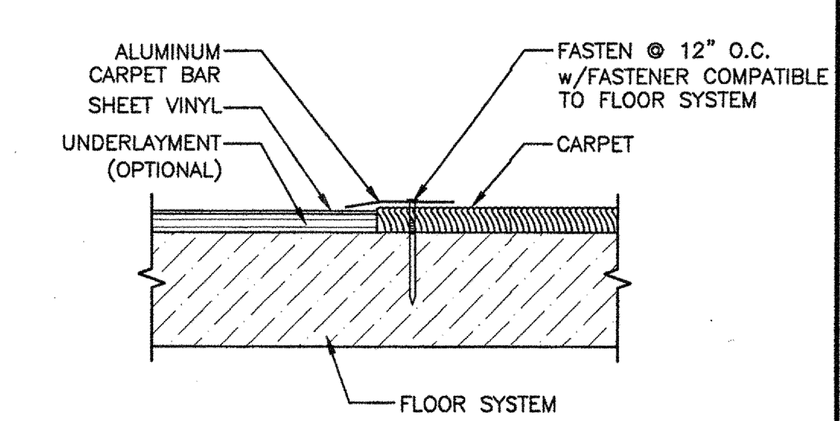

FLOORING TRANSITION DETAIL NOT TO SCALE 14

NOT USED 15

NOT USED 16

NOT USED 17

NOT USED 18

NOT USED 19

NOT USED 20

American Modular Systems
787 Spreckels Ave.Manteca, CA 95336
Phone (209) 825-1921 - Fax (209) 825-7018
americanmodular.com

MODULAR MANUFACTURER PROPRIETARY STATEMENT

THESE DRAWINGS AND THE MATERIAL CONTAINED THEREIN ARE THE PROPERTY OF AMERICAN MODULAR SYSTEMS, INC. (AMS) AND SHALL NOT BE REPRODUCED, COPIED OR OTHERWISE DISPOSED OF DIRECTLY OR INDIRECTLY AND SHALL NOT BE USED IN WHOLE OR IN PART TO ASSIST IN THE MAKING OF OR FOR THE PURPOSE OF FURNISHING ANY INFORMATION FOR THE MAKING OF DRAWINGS, PRINTS, APPARATUS OR PARTS THEREOF WITHOUT THE FULL KNOWLEDGE AND WRITTEN CONSENT OF AMS. ALL PATENTABLE MATERIAL CONTAINED HEREIN AND ORIGINATING WITH AMS SHALL BE THE SOLE PROPERTY OF AMS.

PRE-CHECKED SET NAME

30' x 32' THRU 150' x 32' BUILDINGS

SITE SPECIFIC PROJECT NAME

SHEET TITLE

ACCESSIBILITY STANDARDS DETAILS

MANUFACTURER PROFESSIONAL OF RECORD ON PC

LICENSED ARCHITECT
RANDALL PATRICK CAVANAGH
No. C12631
Ren. 03-31-17
STATE OF CALIFORNIA

PROJECT SPECIFIC STATE AGENCY APPROVAL

IDENTIFICATION STAMP
DIV. OF THE STATE ARCHITECT
02 116495
AC TM FLS SS
DATE 12-18-2017

ORIGINAL PC STATE AGENCY APPROVAL

IDENTIFICATION STAMP
DIV. OF THE STATE ARCHITECT
CA. DEPT. OF GENERAL SERVICES
PC 02-113921
AC FLS SS
DATE 6/19/2015

PRE-CHECK (PC) DOCUMENT – CODE: 2013 CBC
A SEPARATE PROJECT APPLICATION FOR CONSTRUCTION IS REQUIRED

REVISIONS

1	
2	
3	
4	

DRAWN BY:
SCALE: AS NOTED
DATE:

SHEET NUMBER

N4.0

02-113921 – 30' x 32' -150' x 32' EXPOSED STEEL

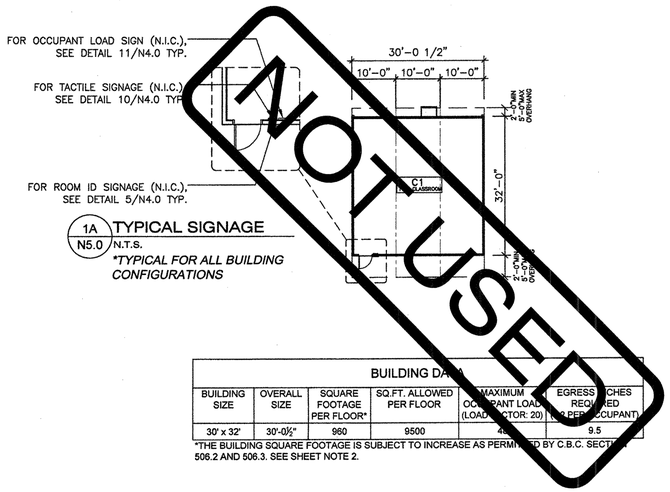

1A / N5.0 TYPICAL SIGNAGE
N.T.S.
TYPICAL FOR ALL BUILDING CONFIGURATIONS

BUILDING DATA					
BUILDING SIZE	OVERALL SIZE	SQUARE FOOTAGE PER FLOOR*	SQ.FT. ALLOWED PER FLOOR	MAXIMUM OCCUPANT LOAD (LOAD FACTOR: 20)	EGRESS INCHES REQUIRED (0.2 PER OCCUPANT)
30' x 32'	30'-0½"	960	9500	48	9.5

*THE BUILDING SQUARE FOOTAGE IS SUBJECT TO INCREASE AS PERMITTED BY C.B.C. SECTION 506.2 AND 506.3. SEE SHEET NOTE 2.

30' x 32' BUILDING FLOOR PLAN — SCALE : 1/16"=1'-0" — 1

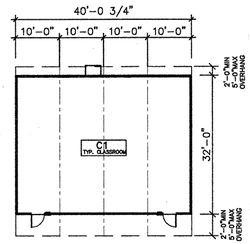

BUILDING DATA					
BUILDING SIZE	OVERALL SIZE	SQUARE FOOTAGE PER FLOOR*	SQ.FT. ALLOWED PER FLOOR	MAXIMUM OCCUPANT LOAD (LOAD FACTOR: 20)	EGRESS INCHES REQUIRED (0.2 PER OCCUPANT)
40' x 32'	40'-0¾"	1280	9500	64	12.8

*THE BUILDING SQUARE FOOTAGE IS SUBJECT TO INCREASE AS PERMITTED BY C.B.C. SECTION 506.2 AND 506.3. SEE SHEET NOTE 2.

40' x 32' BUILDING FLOOR PLAN — SCALE : 1/16"=1'-0" — 2

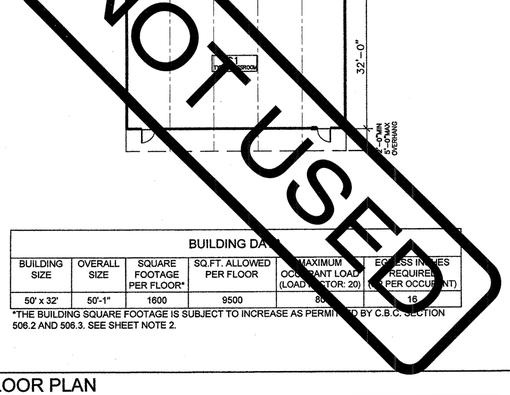

BUILDING DATA					
BUILDING SIZE	OVERALL SIZE	SQUARE FOOTAGE PER FLOOR*	SQ.FT. ALLOWED PER FLOOR	MAXIMUM OCCUPANT LOAD (LOAD FACTOR: 20)	EGRESS INCHES REQUIRED (0.2 PER OCCUPANT)
50' x 32'	50'-1"	1600	9500	80	16

*THE BUILDING SQUARE FOOTAGE IS SUBJECT TO INCREASE AS PERMITTED BY C.B.C. SECTION 506.2 AND 506.3. SEE SHEET NOTE 2.

50' x 32' BUILDING FLOOR PLAN — SCALE : 1/16"=1'-0" — 3

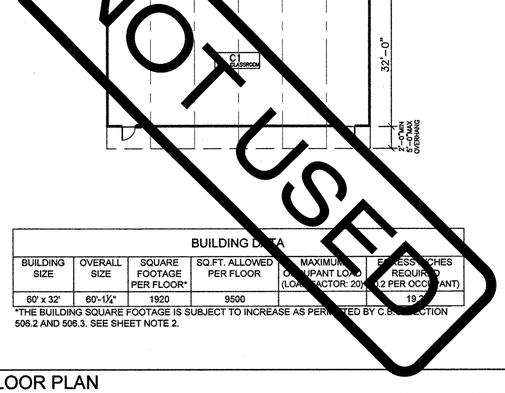

BUILDING DATA					
BUILDING SIZE	OVERALL SIZE	SQUARE FOOTAGE PER FLOOR*	SQ.FT. ALLOWED PER FLOOR	MAXIMUM OCCUPANT LOAD (LOAD FACTOR: 20)	EGRESS INCHES REQUIRED (0.2 PER OCCUPANT)
60' x 32'	60'-1¼"	1920	9500	96	19

*THE BUILDING SQUARE FOOTAGE IS SUBJECT TO INCREASE AS PERMITTED BY C.B.C. SECTION 506.2 AND 506.3. SEE SHEET NOTE 2.

60' x 32' BUILDING FLOOR PLAN — SCALE : 1/16"=1'-0" — 4

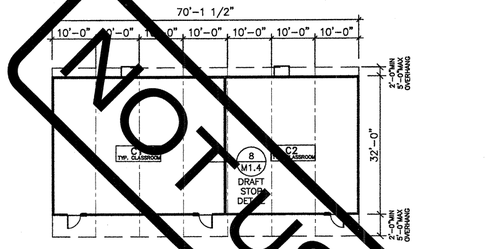

BUILDING DATA					
BUILDING SIZE	OVERALL SIZE	SQUARE FOOTAGE PER FLOOR*	SQ.FT. ALLOWED PER FLOOR	MAXIMUM OCCUPANT LOAD (LOAD FACTOR: 20)	EGRESS INCHES REQUIRED (0.2 PER OCCUPANT)
70' x 32'	70' - 1½"	2240	9500	112	22

*THE BUILDING SQUARE FOOTAGE IS SUBJECT TO INCREASE AS PERMITTED BY C.B.C. SECTION 506.2 AND 506.3. SEE SHEET NOTE 2.

70' x 32' BUILDING FLOOR PLAN — SCALE : 1/16"=1'-0" — 5

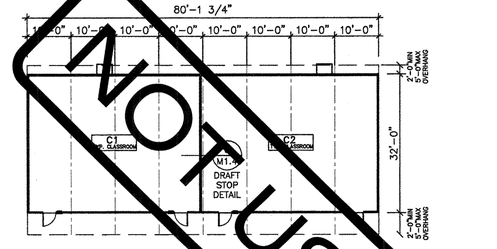

BUILDING DATA					
BUILDING SIZE	OVERALL SIZE	SQUARE FOOTAGE PER FLOOR*	SQ.FT. ALLOWED PER FLOOR	MAXIMUM OCCUPANT LOAD (LOAD FACTOR: 20)	EGRESS INCHES REQUIRED (0.2 PER OCCUPANT)
80' x 32'	80'-1¾"	2560	9500	128	25.6

*THE BUILDING SQUARE FOOTAGE IS SUBJECT TO INCREASE AS PERMITTED BY C.B.C. SECTION 506.2 AND 506.3. SEE SHEET NOTE 2.

80' x 32' BUILDING FLOOR PLAN — SCALE : 1/16"=1'-0" — 6

1. PANIC HARDWARE IS REQUIRED TO BE INSTALLED WHEN THE CONFIGURATION OF ANY ROOM PROVIDES AN OCCUPANT LOAD OF 50 OR GREATER, PER CBC 1008.1.10.
2. THE BUILDING SIZES AND SQUARE FOOTAGES REFLECTED ON THIS SHEET ARE SUBJECT TO SQUARE FOOTAGE INCREASE AS PERMITTED BY SITE CONDITIONS, PER CBC 506.2, AND BY AUTOMATIC SPRINKLER SYSTEM, PER CBC 506.3.
3. RESTROOM CONFIGURATIONS OCCUR AT OUTER WINGS OF BUILDINGS.
4. SEE FOUNDATION DRAWINGS FOR TRUE DIMENSIONS AT FLOOR PLACEMENT AND OVERALL FOUNDATION SIZE.
5. FOR ROOM ID SIGNAGE (N.I.C.) SEE DETAIL 5/N4.0. TYPICAL FOR ALL BUILDING CONFIGURATIONS.
6. MINIMUM EGRESS REQUIRED SHALL BE 34" PER CLASSROOM OR DIMENSION SPECIFIED IN BUILDING DATA, WHICHEVER IS GREATER

SITE NOTE

3/16:12 (1%) MINIMUM TO 1/4:12 (2%) MAXIMUM GRADE FROM FACE OF BUILDING MUST BE ADHERED TO FOR WATER RUN-OFF. PONDING MAY OCCUR AROUND THE PERIMETER OF THE BUILDING.

GENERAL NOTES

American Modular Systems
787 Spreckels Ave.Manteca, CA 95336
Phone (209) 825-1921 - Fax (209) 825-7018
americanmodular.com

MODULAR MANUFACTURER PROPRIETARY STATEMENT

THESE DRAWINGS AND THE MATERIAL CONTAINED THEREIN ARE THE PROPERTY OF AMERICAN MODULAR SYSTEMS, INC. (AMS) AND SHALL NOT BE REPRODUCED, COPIED OR OTHERWISE DISPOSED OF DIRECTLY OR INDIRECTLY AND SHALL NOT BE USED IN WHOLE OR IN PART TO ASSIST IN THE MAKING OF OR FOR THE PURPOSE OF FURNISHING ANY INFORMATION FOR THE MAKING OF DRAWINGS, PRINTS, APPARATUS OR PARTS THEREOF WITHOUT THE FULL KNOWLEDGE AND WRITTEN CONSENT OF AMS. ALL PATENTABLE MATERIAL CONTAINED HEREIN AND ORIGINATING WITH AMS SHALL BE THE SOLE PROPERTY OF AMS.

PRE-CHECKED SET NAME

30' x 32' THRU 150' x 32' BUILDINGS

SITE SPECIFIC PROJECT NAME

SHEET TITLE

MULTIPLE FLOOR PLAN CONFIGURATIONS

MANUFACTURER PROFESSIONAL OF RECORD ON PC

LICENSED ARCHITECT PATRICK OSMANSKI No. C12631 Ren. 08-31-17 STATE OF CALIFORNIA

PROJECT SPECIFIC STATE AGENCY APPROVAL

IDENTIFICATION STAMP DIV. OF THE STATE ARCHITECT
02 I 6495
AC TM
DATE 12-18-2017

ORIGINAL PC STATE AGENCY APPROVAL

IDENTIFICATION STAMP DIV. OF THE STATE ARCHITECT CA. DEPT. OF GENERAL SERVICES
PC 02-113921
AC
DATE 6/19/2015

PRE-CHECK (PC) DOCUMENT - CODE: 2013 CBC
A SEPARATE PROJECT APPLICATION FOR CONSTRUCTION IS REQUIRED

REVISIONS
1
2
3
4

DRAWN BY:
SCALE: AS NOTED
DATE:

SHEET NUMBER

N5.0

AUTOCAD - 30' x 32' - 150' x 32' BY EDWIN SMITH

American Modular Systems | Gen7

Performance Runs By Zone & 45° Orientation

2013 Energy Code

NOTE: Enter data in colored cells only.

Project Name:	30' x 32' Modular Classroom	DSA Application #: 0X-XXXXX	
Date of Title 24 Report:	5/21/2015	DSA File No.:	
Model Name and Option:	AMS 30x32 for DSA.cibd	HVAC Units: Model ID	Efficiency: EER, SEER
Module's Floor Area:	960	Additional Info.	
Additional Information:		Additional Info.	

Comments: 1. Input data from performance runs in columns 2 and 3 for each climate zone worksheet. Subtract process and receptacle loads
2. Input Module detailed information on Table A - One Spreadsheet Tab per HVAC System (i.e. HP, RTU)

AMS 30x32 for DSA.cibd — Climate Zone: 14 Reference City: China Lake

Front Orientation	Std Budget kBtu/sf-yr	Prop. Design kBtu/sf-yr	Compliance margin
0	544.30	474.30	12.9%
45	577.70	502.30	13.1%
90	577.20	509.10	11.8%
135	558.00	491.10	12.0%
180	542.70	475.60	12.4%
225	575.40	504.70	12.3%
270	574.70	510.90	11.1%
315	556.30	491.30	11.7%

AMS 30x32 for DSA.cibd — Climate Zone: 15 Reference City: El Centro

Front Orientation	Std Budget kBtu/sf-yr	Prop. Design kBtu/sf-yr	Compliance margin
0	598.10	495.20	17.2%
45	625.70	514.80	17.7%
90	619.30	522.70	15.6%
135	598.60	510.30	14.8%
180	596.40	496.50	16.8%
225	623.20	516.70	17.1%
270	620.00	523.80	15.5%
315	599.20	510.30	14.8%

AMS 30x32 for DSA.cibd — Climate Zone: 16 Reference City: Mount Shasta

Front Orientation	Std Budget kBtu/sf-yr	Prop. Design kBtu/sf-yr	Compliance margin
0	501.20	440.40	12.1%
45	519.10	459.20	11.5%
90	515.00	462.50	10.2%
135	499.40	449.00	10.1%
180	499.30	441.40	11.6%
225	518.40	460.90	11.1%
270	512.40	464.20	9.4%
315	497.40	449.30	9.7%

Table A - Module Information per HVAC system.
Climate Zones: 1 thru 16 (if different, use another tab)

Envelope: Insulation Types	Standing Seam
Roof, Type 1	R-19
Roof, Type 2	
Wall, Type 1	R-13
Wall, Type 2	Option: R-13 batt + R-5 c.i.
Floor, Type 1	Concrete Slab above
Floor, Type 2	
Glazing: Typical Glass Type	Open / Fixed
U-Factor:	0.78 (NFRC)
RSHGC:	0.43 SHGC (NFRC)
VT:	37%
HVAC Units: Model ID	Efficiency: EER, SEER
Bard S43H1 (SPVU) - 3-1/2 ton	11.1 EER (13.0 SEER)
Bard S43H1 (SPVU) - 3-1/2 ton	3.2 COP (7.7 HSPF)

Notes:
When a unique PC design contains multiple sizes, the smallest and the largest potential size should be modeled at 45 compass intervals in each Climate Zone for which the PC seeks approval.
The electronically-generated computer file(s) that produced the worst case energy use results for each climate zone for each unique PC design configuration that is modeled should be provided to DSA.

Brummitt Energy Associates, Inc. www.brummitt.com

Project Name:	AMS Modular Classroom 30x32	NRCC-PRF-01-E	Page 1 of 18
Project Address:	CZ 16 Mount Shasta	Calculation Date/Time:	19:14, Thu, May 21, 2015
Compliance Scope:	NewComplete	Input File Name:	EP6 AMS 30x32 for DSA - CZ16.cibd

A. PROJECT GENERAL INFORMATION

1.	Project Location (city)	Mount Shasta	7.	# of dwelling units	0
2.	CA Zip Code		8.	Compliance Software (version)	CBECC-Com 2013-3b (717)
3.	Climate Zone	16	9.	Building Orientation (deg)	(W) 270 deg
4.	Total Conditioned Floor Area	960 ft²	10.	Permitted Scope of Work	NewComplete
5.	Total Unconditioned Floor Area	0 ft²	11.	Building Type(s)	Nonresidential
6.	# of Stories (Habitable Above Grade)	1			

B. COMPLIANCE RESULTS FOR PERFORMANCE COMPONENTS § 140.1

BUILDING COMPLIES

1. Energy Component	2. Standard Design (TDV)	3. Proposed Design (TDV)	4. Compliance Margin (TDV)	5. Percent Better than Standard
Space Heating	46.3	120.9	-74.6	-161.1%
Space Cooling	102.2	133.1	-30.9	-30.2%
Indoor Fans	200.2	19.4	180.8	90.3%
Heat Rejection	--	--	--	--
Pumps & Misc.	--	--	--	--
Domestic Hot Water	36.3	95.6	-59.3	-163.4%
Indoor Lighting	60.6	28.4	32.2	53.1%
COMPLIANCE TOTAL	445.6	397.4	48.2	10.8%
Receptacle	66.8	66.8		0.0%
Process	--	--		--
Process Ltg	--	--		--
TOTAL	512.4	464.2		9.4%

CA Building Energy Efficiency Standards- 2013 Nonresidential Compliance — Report Version: NRCC-PRF-01-E-03232015-717

Project Name:	AMS Modular Classroom 30x32	NRCC-PRF-01-E	Page 2 of 18
Project Address:	CZ 16 Mount Shasta	Calculation Date/Time:	19:14, Thu, May 21, 2015
Compliance Scope:	NewComplete	Input File Name:	EP6 AMS 30x32 for DSA - CZ16.cibd

C. PRIORITY PLAN CHECK/ INSPECTION ITEMS (in order of highest to lowest TDV energy savings)

1st	Indoor Fans: Check envelope and mechanical
2nd	Indoor Lighting: Check lighting
3rd	Heat Rejection: Check envelope and mechanical
4th	Pumps & Misc.: Check mechanical
5th	Space Cooling: Check envelope and mechanical
6th	Domestic Hot Water: Check mechanical
7th	Space Heating: Check envelope and mechanical

Compliance Margin By Energy Component (from Table B column 4)

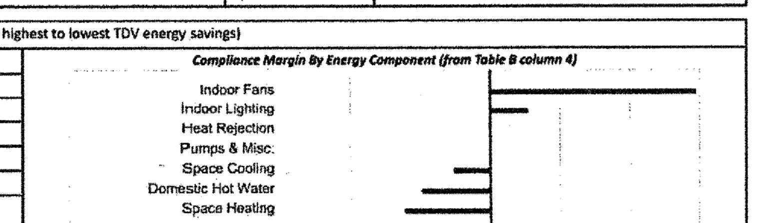

D. EXCEPTIONAL CONDITIONS

The compliance model includes HVAC equipment with capacities that differ from the building plans, presumably to meet unmet load hour requirements. Verify that the equipment in the design provides adequate cooling and heating capacity for the spaces served.

E. HERS VERIFICATION

This Section Does Not Apply

F. ADDITIONAL REMARKS

None Provided

CA Building Energy Efficiency Standards- 2013 Nonresidential Compliance — Report Version: NRCC-PRF-01-E-03232015-717

Project Name:	AMS Modular Classroom 30x32	NRCC-PRF-01-E	Page 3 of 18
Project Address:	CZ 16 Mount Shasta	Calculation Date/Time:	19:14, Thu, May 21, 2015
Compliance Scope:	NewComplete	Input File Name:	EP6 AMS 30x32 for DSA - CZ16.cibd

G. COMPLIANCE PATH & CERTIFICATE OF COMPLIANCE SUMMARY

Identify which building components use the performance or prescriptive path for compliance. "NA"= not in project
For components that utilize the performance path, indicate the sheet number that includes mandatory notes on plans.

Building Component	Compliance Path	Compliance Forms *(required for submittal)*	Location of Mandatory Notes on Plans
Envelope	☒ Performance	NRCC-PRF-ENV-DETAILS (section of the NRCC-PRF-01-E)	
	☐ Prescriptive	NRCC-ENV-01 / 02 / 03 / 04 / 05 / 06-E	
	☐ NA		
Mechanical	☒ Performance	NRCC-PRF-MCH-DETAILS (section of the NRCC-PRF-01-E)	
	☐ Prescriptive	NRCC-MCH-01 / 02 / 03 / 04 / 05 / 06 / 07-E	
	☐ NA		
Domestic Hot Water	☒ Performance	NRCC-PRF-PLB-DETAILS (section of the NRCC-PRF-01-E)	
	☐ Prescriptive	NRCC-PLB-01-E	
	☐ NA		
Lighting (Indoor Conditioned)	☒ Performance	NRCC-PRF-LTI-DETAILS (section of the NRCC-PRF-01-E)	
	☐ Prescriptive	NRCC-LTI-01 / 02 / 03 / 04 / 05-E	
	☐ NA		
Covered Process: Commercial Kitchens	☐ Performace	S2 (section of the NRCC-PRF-01-E)	
	☐ Prescriptive	NRCC-PRC-01/ 03-E	
	☒ NA		
Covered Process: Computer Rooms	☐ Performace	S3 (section of the NRCC-PRF-01-E)	
	☐ Prescriptive	NRCC-PRC-01/ 04-E	
	☒ NA		
Covered Process: Laboratory Exhaust	☐ Performace	S4 (section of the NRCC-PRF-01-E)	
	☐ Prescriptive	NRCC-PRC-01/ 09-E	
	☒ NA		

CA Building Energy Efficiency Standards- 2013 Nonresidential Compliance — Report Version: NRCC-PRF-01-E-03232015-717

Project Name:	AMS Modular Classroom 30x32	NRCC-PRF-01-E	Page 4 of 18
Project Address:	CZ 16 Mount Shasta	Calculation Date/Time:	19:14, Thu, May 21, 2015
Compliance Scope:	NewComplete	Input File Name:	EP6 AMS 30x32 for DSA - CZ16.cibd

G. COMPLIANCE PATH & CERTIFICATE OF COMPLIANCE SUMMARY

The following building components are only eligible for prescriptive compliance. Indicate which are relevant to the project. / *The following building components may have mandatory requirements per Part 6. Indicate which are relevant to the project.*

Yes	NA	Prescriptive Requirement	Compliance Forms	Yes	NA	Mandatory Requirement	Compliance Forms
☐	☒	Lighting (Indoor Unconditioned) §140.6	NRCC-LTI-01 / 02 / 03 / 04 / 05-E	☐ ☐	☒ ☒	Commissioning: §120.8 Simple Systems Complex Systems	NRCC-CXR-01 / 02 / 03 / 05-E NRCC-CXR-01 / 02 / 04 / 05-E
☐	☒	Lighting (Outdoor) §140.7	NRCC-LTO-01 / 02 / 03-E	☐	☒	Electrical: §130.5	NRCC-ELC-01-E
☐	☒	Lighting (Sign) §140.8	NRCC-LTS-01-E	☐	☒	Solar Ready: §110.10	NRCC-SRA-01 / 02-E
☐	☒	Solar Thermal Water Heating: §140.5	NRCC-STH-01-E	☐ ☐ ☐ ☐ ☐ ☐	☒ ☒ ☒ ☒ ☒ ☒	Covered Process: §120.6 Parking Garage Commercial Refrigeration Warehouse Refrigeration Compressed Air Process Boilers	NRCC-PRC-01-E NRCC-PRC-02-E NRCC-PRC-05-E NRCC-PRC-06/07/08-E NRCC-PRC-10-E NRCC-PRC-11-E

CA Building Energy Efficiency Standards- 2013 Nonresidential Compliance — Report Version: NRCC-PRF-01-E-03232015-717

Project Name:	AMS Modular Classroom 30x32	NRCC-PRF-01-E	Page 5 of 18
Project Address:	CZ 16 Mount Shasta	Calculation Date/Time:	19:14, Thu, May 21, 2015
Compliance Scope:	NewComplete	Input File Name:	EP6 AMS 30x32 for DSA - CZ16.cibd

H. CERTIFICATE OF INSTALLATION, CERTIFICATE OF ACCEPTANCE & CERTIFICATE OF VERIFICATION SUMMARY (NRCI/NRCA/NRCV) –
Documentation Author to indicate which Certificates must be submitted for the features to be recognized for compliance
(Retain copies and verify forms are completed and signed to post in field for Field Inspector to verify).
See Tables G. and H. in MCH and LTI Details Sections for Acceptance Tests and forms by equipment.

Building Component	Compliance Forms *(required for submittal)*	Confirmed Pass	Confirmed Fail
Envelope	☒ NRCI-ENV-01-E - For all buildings	☐	☐
	☐ NRCA-ENV-02-F- NFRC label verification for fenestration	☐	☐
Mechanical	☒ NRCI-MCH-01-E - For all buildings with Mechanical Systems	☐	☐
	☒ NRCA-MCH-02-A- Outdoor Air	☐	☐
	☐ NRCA-MCH-03-A – Constant Volume Single Zone HVAC	☐	☐
	☐ NRCA-MCH-04-H- Air Distribution Duct Leakage	☐	☐
	☐ NRCA-MCH-05-A- Air Economizer Controls	☐	☐
	☐ NRCA-MCH-06-A- Demand Control Ventilation	☐	☐
	☒ NRCA-MCH-07-A – Supply Fan Variable Flow Controls	☐	☐
	☐ NRCA-MCH-08-A- Valve Leakage Test	☐	☐
	☐ NRCA-MCH-09-A – Supply Water Temp Reset Controls	☐	☐
	☐ NRCA-MCH-10-A- Hydronic System Variable Flow Controls	☐	☐
	☒ NRCA-MCH-11-A – Auto Demand Shed Controls	☐	☐
	☐ NRCA-MCH-12-A- Packaged Direct Expansion Units	☐	☐
	☐ NRCA-MCH-13-A- Air Handling Units and Zone Terminal Units	☐	☐
	☐ NRCA-MCH-14-A- Distributed Energy Storage	☐	☐
	☐ NRCA-MCH-15-A – Thermal Energy Storage	☐	☐
	☒ NRCA-MCH-16-A- Supply Air Temp Reset Controls	☐	☐
	☐ NRCA-MCH-17-A – Condensate Water Temp Reset Controls	☐	☐
	☐ NRCA-MCH-18-A- Energy Management Controls Systems	☐	☐
	☐ NRCV-MCH-04-H- Duct Leakage Test	☐	☐

CA Building Energy Efficiency Standards- 2013 Nonresidential Compliance — Report Version: NRCC-PRF-01-E-03232015-717

Project Name:	AMS Modular Classroom 30x32	NRCC-PRF-01-E	Page 6 of 18
Project Address:	CZ 16 Mount Shasta	Calculation Date/Time:	19:14, Thu, May 21, 2015
Compliance Scope:	NewComplete	Input File Name:	EP6 AMS 30x32 for DSA - CZ16.cibd

H. CERTIFICATE OF INSTALLATION, CERTIFICATE OF ACCEPTANCE & CERTIFICATE OF VERIFICATION SUMMARY (NRCI/NRCA/NRCV) –
Documentation Author to indicate which Certificates must be submitted for the features to be recognized for compliance
(Retain copies and verify forms are completed and signed to post in field for Field Inspector to verify).
See Tables G. and H. in MCH and LTI Details Sections for Acceptance Tests and forms by equipment.

Building Component	Compliance Forms *(required for submittal)*	Confirmed Pass	Confirmed Fail
Plumbing	☐ NRCI-PLB-01-E - For all buildings with Plumbing Systems	☐	☐
	☐ NRCI-PLB-02-E - required on central systems in high-rise residential, hotel/motel application.	☐	☐
	☐ NRCI-PLB-03-E - Single dwelling unit systems in high-rise residential, hotel/motel application.	☐	☐
	☐ NRCI-PLB-21-E - HERS verified central systems in high-rise residential, hotel/motel application.	☐	☐
	☐ NRCI-PLB-22-E - HERS verified single dwelling unit systems in high-rise residential, hotel/motel application.	☐	☐
	☐ NRCV-PLB-21-H- HERS verified central systems in high-rise residential, hotel/motel application.	☐	☐
	☐ NRCV-PLB-22-H - HERS verified single dwelling unit systems in high-rise residential, hotel/motel application.	☐	☐
	☐ NRCI-STH-01-E - Any solar water heating	☐	☐
Indoor Lighting	☒ NRCI-LTI-01-E - For all buildings	☐	☐
	☐ NRCI-LTI-02-E - Lighting control system, or for an Energy Management Control System (EMCS)	☐	☐
	☐ NRCI-LTI-03-E - Line-voltage track lighting integral current limiter, or for a supplementary overcurrent protection panel used to energize only line-voltage track lighting	☐	☐
	☐ NRCI-LTI-04-E - Two interlocked systems serving an auditorium, a convention center, a conference room, or a theater	☐	☐
	☐ NRCI-LTI-05-E - Lighting Control Credit Power Adjustment Factor (PAF)	☐	☐
	☐ NRCI-LTI-06-E - Additional wattage installed in a video conferencing studio	☐	☐
	☐ NRCA-LTI-02-A - Occupancy sensors and automatic time switch controls.	☐	☐
	☐ NRCA-LTI-03-A - Automatic daylighting controls	☐	☐
	☐ NRCA-LTI-04-A - Demand responsive lighting controls	☐	☐
Outdoor Lighting	☐ NRCI-LTO-01-E – Outdoor Lighting	☐	☐
	☐ NRCI-LTO-01-E- EMCS Lighting Control System	☐	☐
	☐ NRCA-LTO-02-A – Outdoor Lighting Control	☐	☐
Sign Lighting	☐ NRCI-LTS-01-E – Sign Lighting	☐	☐
Electrical	☐ NRCI-ELC-01-E – Electrical Power Distribution	☐	☐
Photovoltaic	☐ NRCI-SPV-01-E Photovoltaic Systems	☐	☐

CA Building Energy Efficiency Standards- 2013 Nonresidential Compliance — Report Version: NRCC-PRF-01-E-03232015-717

Project Name:	AMS Modular Classroom 30x32	NRCC-PRF-01-E	Page 7 of 18
Project Address:	CZ 16 Mount Shasta	Calculation Date/Time:	19:14, Thu, May 21, 2015
Compliance Scope:	NewComplete	Input File Name:	EP6 AMS 30x32 for DSA - CZ16.cibd

H. CERTIFICATE OF INSTALLATION, CERTIFICATE OF ACCEPTANCE & CERTIFICATE OF VERIFICATION SUMMARY (NRCI/NRCA/NRCV) –
Documentation Author to indicate which Certificates must be submitted for the features to be recognized for compliance
(Retain copies and verify forms are completed and signed to post in field for Field Inspector to verify).
See Tables G. and H. in MCH and LTI Details Sections for Acceptance Tests and forms by equipment.

Building Component	Compliance Forms *(required for submittal)*	Confirmed Pass	Confirmed Fail
Covered Process	☐ NRCI-PRC-01-E Refrigerated Warehouse	☐	☐
	☐ NRCA-PRC-01-F- Compressed Air Systems	☐	☐
	☐ NRCA-PRC-02-F- Kitchen Exhaust	☐	☐
	☐ NRCA-PRC-03-F- Garage Exhaust	☐	☐
	☐ NRCA-PRC-04-F- Refrigerated Warehouse- Evaporator Fan Motor Controls	☐	☐
	☐ NRCA-PRC-05-F- Refrigerated Warehouse- Evaporative Condenser Controls	☐	☐
	☐ NRCA-PRC-06-F- Refrigerated Warehouse- Air Cooled Condenser Controls	☐	☐
	☐ NRCA-PRC-07F- Refrigerated Warehouse- Variable Speed Compressor	☐	☐
	☐ NRCA-PRC-08-F- Electrical Resistance Underslab Heating System	☐	☐

I. ENVELOPE GENERAL INFORMATION (See NRCC-PRF-ENV-DETAILS for more information)

1.	Total Conditioned Floor Area	960 ft²	5.	Number of Floors Above Grade	1
2.	Total Unconditioned Floor Area	0 ft²	6.	Number of Floors Below Grade	0
3.	Addition Conditioned Floor Area	0 ft²			
4.	Addition Unconditioned Floor Area	0 ft²			

7. Opaque Surfaces & Orientation	8. Total Gross Surface Area	9. Total Fenestration Area	10. Window to Wall Ratio	Pass	Fail
North Wall	366 ft²	0 ft²	00.0%	☐	☐
East Wall	330 ft²	160 ft²	48.5%	☐	☐
South Wall	366 ft²	0 ft²	00.0%	☐	☐
West Wall	330 ft²	160 ft²	48.5%	☐	☐
Total	1,392 ft²	320 ft²	23.0%	☐	☐
Roof	960 ft²	0 ft²	00.0%	☐	☐

CA Building Energy Efficiency Standards- 2013 Nonresidential Compliance — Report Version: NRCC-PRF-01-E-03232015-717

Project Name:	AMS Modular Classroom 30x32	NRCC-PRF-01-E	Page 8 of 18
Project Address:	CZ 16 Mount Shasta	Calculation Date/Time:	19:14, Thu, May 21, 2015
Compliance Scope:	NewComplete	Input File Name:	EP6 AMS 30x32 for DSA - CZ16.cibd

J. FENESTRATION ASSEMBLY SUMMARY § 110.6

1. Fenestration Assembly Name / Tag or I.D.	2. Fenestration Type	3. Certification Method[1]	4. Assembly Method	5. Area ft²	6. Overall U-factor	7. Overall SHGC	8. Overall VT	Pass	Fail
All Weather 3/16? Grey / 1/8? Clear NFRC	VerticalFenestration	NFRCRated	Manufactured	320	0.78	0.43	0.37	☐	☐

[1] Newly installed fenestration shall have a certified NFRC Label Certificate or use the CEC default tables found in Table 116-A and Table 116B. Site-built fenestration less than 1,000 ft², or more than or equal to 1,000 ft² see Reference Nonresidential Appendix NA6.

Taking compliance credit for fenestration shading devices? (if "Yes", see NRCC-PRF-ENV-DETAILS for more information) — No

K. OPAQUE SURFACE ASSEMBLY SUMMARY § 120.7/ § 140.3

1. Surface Name	2. Surface Type	3. Area (ft²)	4. Framing Type	5. Cavity R-Value	6. Continuous R-Value	7. U-Factor / F-Factor / C-Factor	8. Condition Status	Pass	Fail
Concr. Slab over Crawlspace	ExteriorFloor	960	NA	0	NA	U-Factor: 0.210	New	☐	☐
Roof: U 0.70 per EZFrame	Roof	960	Metal	19	2	U-Factor: 0.071	New	☐	☐
R-13 in 4 wood frame	ExteriorWall	1,392	Wood	13	NA	U-Factor: 0.095	New	☐	☐

L. ROOFING PRODUCT SUMMARY § 140.3

1. Product Type	2. Product ≥25 lb ft²	3. Aged Solar Reflectance	4. Thermal Emittance	5. SRI	6. Cool Roof Credit	7. CRRC Product ID Number	Pass	Fail
Roof: U 0.70 per EZFrame	No	0.08	0.75	NA	No	NA	☐	☐

CA Building Energy Efficiency Standards- 2013 Nonresidential Compliance — Report Version: NRCC-PRF-01-E-03232015-717

Project Name:	AMS Modular Classroom 30x32	NRCC-PRF-01-E	Page 9 of 18
Project Address:	CZ 16 Mount Shasta	Calculation Date/Time:	19:14, Thu, May 21, 2015
Compliance Scope:	NewComplete	Input File Name:	EP6 AMS 30x32 for DSA - CZ16.cibd

M. HVAC SYSTEM SUMMARY (see NRCC-PRF-MCH-DETAILS for more information) § 110.1 / § 110.2

Dry System Equipment [1] (Fan & Economizer info included below in Table N)

1. Equip Name	2. Equip Type	3. System Type (Simple [3] or Complex [4])	4. Qty	5. Total Heating Output (kBtu/h)	6. Supp Heat Source (Y/N)	7. Supp Heat Output (kBtuh)	8. Total Cooling Output (kBtu/h)	9. Efficiency Cooling	9. Efficiency Heating	10. Acceptance Testing Required? (Y/N) [5]	Pass	Fail
AC-13	SZVAVHP	Complex	1	62	No	0	63	SEER-13.0	HSPF-7.7	Yes	☐	☐

Wet System Equipment [2] / *Pumps*

11. Equip Name	12. Equip Type	13. Qty	14. Vol (gal)	15. Rated Capacity (kBtu/h)	16. Efficiency	17. Standby Loss	18. Tank Ext. R Value	19. Qty	20. GPM	21. HP	22. VSD (Y/N)	Pass	Fail
Rheem 82VP30-12	Storage	1	30	15	EF: 0.930	NA	NA	NA	NA	NA	No	☐	☐

[1] Dry System Equipment includes furnaces, air handling units, heat pumps, etc.
[2] Wet System Equipment includes boilers, chillers, cooling towers, water heaters, etc.
[3] Simple Systems must complete NRCC-CXR-03-E commissioning design review form
[4] Complex Systems must complete NRCC-CXR-04-E commissioning design review form
[5] A summary of which acceptance tests are applicable is provided in NRCC-PRF-MCH-DETAILS

Discrepancy between modeled and designed equipment sizing? (if "Yes", see Table F, "Additional Remarks" for an explanation) — Yes

N. ECONOMIZER & FAN SYSTEMS SUMMARY[1] § 140.4

1. Equip Name	2. Outside Air CFM	3. Supply Fan CFM	HP	BHP	TSP (inch WC)	Control	4. Return Fan CFM	HP	BHP	TSP (inch WC)	Control	5. Economizer Type (if present)	Pass	Fail
AC-13	360	2000	0.750	NA	1.25	VariableSpeedDrive	NA	NA	NA	NA	NA	NoEconomizer	☐	☐

[1] Mechanical ventilation calculations and exhaust fans are included in the NRCC-PRF-MCH-DETAILS section

CA Building Energy Efficiency Standards- 2013 Nonresidential Compliance — Report Version: NRCC-PRF-01-E-03232015-717

APPROVED
DIVISION OF STATE ARCHITECT
HIGH PERFORMANCE SECTION
APP.# 02-113921 DATE: 6/10/15
Lydia Baron C.E.P.E

American Modular Systems
787 Spreckels Ave.Manteca, CA 95336
Phone (209) 825-1921 - Fax (209) 825-7018
americanmodular.com

MODULAR MANUFACTURER PROPRIETARY STATEMENT

THESE DRAWINGS AND THE MATERIAL CONTAINED THEREIN ARE THE PROPERTY OF AMERICAN MODULAR SYSTEMS, INC. (AMS) AND SHALL NOT BE REPRODUCED, COPIED OR OTHERWISE DISPOSED OF DIRECTLY OR INDIRECTLY AND SHALL NOT BE USED IN WHOLE OR IN PART TO ASSIST IN THE MAKING OF OR FOR THE PURPOSE OF FURNISHING ANY INFORMATION FOR THE MAKING OF DRAWINGS, PRINTS, APPARATUS OR PARTS THEREOF WITHOUT THE FULL KNOWLEDGE AND WRITTEN CONSENT OF AMS. ALL PATENTABLE MATERIAL CONTAINED HEREIN AND ORIGINATING WITH AMS SHALL BE THE SOLE PROPERTY OF AMS.

PRE-CHECKED SET NAME

30' x 32' THRU 150' x 32' BUILDINGS

SITE SPECIFIC PROJECT NAME

SHEET TITLE

ENERGY CALCULATIONS

MANUFACTURER PROFESSIONAL OF RECORD ON PC

LICENSED ARCHITECT — RANDALL PATRICK CAVANAGH — No. C12631 — Ren. 03-31-17 — STATE OF CALIFORNIA

PROJECT SPECIFIC STATE AGENCY APPROVAL

IDENTIFICATION STAMP
DIV. OF THE STATE ARCHITECT
02 116495
AC – FLS SS
DATE 12-18-2017

ORIGINAL PC STATE AGENCY APPROVAL

IDENTIFICATION STAMP
DIV. OF THE STATE ARCHITECT
CA. DEPT. OF GENERAL SERVICES
PC 02–113921
AC FLS SS
DATE 6/19/2015

PRE–CHECK (PC) DOCUMENT – CODE: 2013 CBC
A SEPARATE PROJECT APPLICATION FOR CONSTRUCTION IS REQUIRED

REVISIONS

1	
2	
3	
4	

DRAWN BY:
SCALE: AS NOTED
DATE:

SHEET NUMBER

EN.1

02-113921 – 30'x32' – 150'x32' EXPOSED STEEL

Project Name:	AMS Modular Classroom 30x32	NRCC-PRF-01-E	Page 10 of 18
Project Address:	CZ 16 Mount Shasta	Calculation Date/Time:	19:14, Thu, May 21, 2015
Compliance Scope:	NewComplete	Input File Name:	EP6 AMS 30x32 for DSA - CZ16.cibd

O. EQUIPMENT CONTROLS		§ 120.2	Confirmed	
1.	2.	3.	Pass	Fail
Equip Name	Equip Type	Controls		
AC-13	SZVAVHP	No DCV Controls No Economizer No Supply Air Temp. Control	☐	☐
DHW1 - SHW	Service Hot Water, Primary Only	Fixed Temperature Control, No DDC	☐	☐

P. SYSTEM DISTRIBUTION SUMMARY	§ 120.4/ § 140.4(l)
This Section Does Not Apply	

Does the Project Include Zonal Systems? (If "Yes", see NRCC-PRF-MCH-DETAILS for system information)	No
Does the Project Include a Solar Hot Water System? (If "Yes", see NRCC-PRF-MCH-DETAILS for system information)	No
Multifamily or Hotel/ Motel Occupancy? (If "Yes", see NRCC-PRF-MCH-DETAILS for DHW system information)	No

Q. INDOOR CONDITIONED LIGHTING GENERAL INFO (see NRCC-PRF-LTI-DETAILS for more info)						§ 140.6	
						Confirmed	
1.	2.	3.	4.	5.		Pass	Fail
Occupancy Type [1]	Conditioned Floor Area [2] (ft²)	Installed Lighting Power (Watts)	Lighting Control Credits (Watts)	Additional (Custom) Allowance			
				Area Category Footnotes (Watts)	Tailored Method (Watts)	☐	☐
Classrooms, Lecture, Training, Vocational Areas	960	540	0	0	0	☐	☐
Building Totals:	960	540		0			

[1] See Table 140.6-C
[2] See NRCC-LTI-01-E for unconditioned spaces

Project Name:	AMS Modular Classroom 30x32	NRCC-PRF-01-E	Page 11 of 18
Project Address:	CZ 16 Mount Shasta	Calculation Date/Time:	19:14, Thu, May 21, 2015
Compliance Scope:	NewComplete	Input File Name:	EP6 AMS 30x32 for DSA - CZ16.cibd

R. INDOOR CONDITIONED LIGHTING SCHEDULE (Adapted from NRCC-LTI-01-E)[1]							§ 130.0	
Luminaire Schedule (includes all permanent installed lighting in conditioned space, and portable lighting over 0.3 w/ft² in offices)		Installed Watts (Conditioned)					Confirmed	
Name or Item Tag	Complete Luminaire Description (i.e., 3-lamp fluorescent troffer, F32T8, one dimmable electronic ballast)	Watts per luminaire	How Wattage is Determined: CEC Default from NA8	How Wattage is Determined: According to §130.0(c)	Total Number Luminaires	Installed Watts	Pass	Fail
VTLED	A - 60w LED	60	Yes	No	9	540	☐	☐

[1] If lighting power densities were used in the compliance model Building Departments will need to check prescriptive forms for Luminaire Schedule details.

S1. COVERED PROCESS SUMMARY – ENCLOSED PARKING GARAGES	§ 140.9
This Section Does Not Apply	

S2. COVERED PROCESS SUMMARY – COMMERCIAL KITCHENS	§ 140.9
This Section Does Not Apply	

S3. COVERED PROCESS SUMMARY – COMPUTER ROOMS	§ 140.9
This Section Does Not Apply	

S4. COVERED PROCESS SUMMARY – LABORATORY EXHAUSTS	§ 140.9
This Section Does Not Apply	

Project Name:	AMS Modular Classroom 30x32	NRCC-PRF-01-E	Page 12 of 18
Project Address:	CZ 16 Mount Shasta	Calculation Date/Time:	19:14, Thu, May 21, 2015
Compliance Scope:	NewComplete	Input File Name:	EP6 AMS 30x32 for DSA - CZ16.cibd

DOCUMENTATION AUTHOR'S DECLARATION STATEMENT	§ 10-103
I certify that this Certificate of Compliance documentation is accurate and complete.	
Documentation Author Name: Hans Marsman, CEA, CEPE, LEED AP BD+C	Documentation Author Signature:
Company: Brummitt Energy Associates, Inc	Signature Date:
Address: 777 South Highway 101, Suite 203	CEA Identification (If applicable): Senior Energy Analyst CABEC
City/State/Zip: Solana Beach / California / 92075	Phone: 619.531.1126

Hans Marsman, cn=Hans Marsman, o=Brummitt Energy, ou, email=hmarsman@brummitt.com, c=US 2015.05.21 10:25:03 -07'00'

RESPONSIBLE PERSON'S DECLARATION STATEMENT	
I certify the following under penalty of perjury, under the laws of the State of California:	Professional Stamp (optional):
☒ I hereby affirm that I am eligible under the provisions of Division 3 of the Business and Professions Code to sign this document as the person responsible for its preparation; and that I am licensed in the State of California as a civil engineer, mechanical engineer, electrical engineer, or I am a licensed architect.	
☐ I affirm that I am eligible under the provisions of Division 3 of the Business and Professions Code by section 5537.2 or 6737.3 to sign this document as the person responsible for its preparation; and that I am a licensed contractor performing this work.	
☐ I affirm that I am eligible under Division 3 of the Business and Professions Code to sign this document because it pertains to a structure or type of work described as exempt pursuant to Business and Professions Code Sections 5537, 5538 and 6737.1.	
Building Owner's Name: - specify -	Building Owner's Signature:
Address: - specify -	Date Signed:
City/State/Zip: - specify - / - specify - / - specify -	Phone: - specify -
Responsible Architectural Designer Name: Randall P Cavannagh	Responsible Architectural Designer Signature: Randall Cavanagh
Company: American Modular Systems | Gen7 Schools	Date Signed: 05/26/15
Address: 787 Spreckels Avenue	License: C12631
City/State/Zip: Manteca / CA / 95336	Phone: 209.825.1921
Responsible Lighting Designer Name: Randall P Cavannagh	Responsible Lighting Designer Signature: Randall Cavanagh
Company: American Modular Systems | Gen7 Schools	Date Signed: 05/26/15
Address: 787 Spreckels Avenue	License: C12631
City/State/Zip: Manteca / CA / 95336	Phone: 209.825.1921
Responsible Mechanical Designer Name: Randall P Cavannagh	Responsible Mechanical Designer Signature: Randall Cavanagh
Company: American Modular Systems | Gen7 Schools	Date Signed: 05/26/15
Address: 787 Spreckels Avenue	License: C12631
City/State/Zip: Manteca / CA / 95336	Phone: 209.825.1921

Project Name:	AMS Modular Classroom 30x32	NRCC-PRF-01-E	Page 13 of 18
Project Address:	CZ 16 Mount Shasta	Calculation Date/Time:	19:14, Thu, May 21, 2015
Compliance Scope:	NewComplete	Input File Name:	EP6 AMS 30x32 for DSA - CZ16.cibd

NRCC-PRF-ENV-DETAILS -SECTION START-

A. OPAQUE SURFACE ASSEMBLY DETAILS				Confirmed	
1.	2.	3.	4.	Pass	Fail
Surface Name	Surface Type	Description of Assembly Layers	Notes		
Concr. Slab over Crawlspace	ExteriorFloor	Air - Floor - 3 1/2 in. Concrete - 140 lb/ft3 - 4 in. Carpet - 3/4 in.		☐	☐
Roof: U 0.70 per EZFrame	Roof	Metal Standing Seam - 1/16 in. Expanded Polystyrene - EPS - 1/2 in. R2.1 Metal framed roof, 24in. OC, 5.5in., R-19 Acoustic Tile - 3/8 in.	See EZFrame Report for U-factor	☐	☐
R-13 in 4 wood frame	ExteriorWall	Wood siding - 1/2 in. Wood framed wall, 16in. OC, 3.5in., R-13 Gypsum Board - 1/2 in.		☐	☐

B. OVERHANG DETAILS (Adapted from NRCC-ENV-02-E)					Confirmed	
1.	2.	3.		4.	Pass	Fail
Fenestration Tag/ID	Fenestration Orientation	Overhang Dimensions: Horizontal Projection	Overhang Dimensions: Distance Above Window	Side fin: Vertical Projection		
A - 10x8 Max (OH)15	West	4.0 ft.	2.0 ft.	Left: 0 ft., Right: 0 ft.	☐	☐
A - 10x8 Max (OH)16	West	3.0 ft.	2.0 ft.	Left: 0 ft., Right: 0 ft.	☐	☐
A - 10x8 Max (OH)20	East	4.0 ft.	2.0 ft.	Left: 0 ft., Right: 0 ft.	☐	☐
A - 10x8 Max (OH)21	East	4.0 ft.	2.0 ft.	Left: 0 ft., Right: 0 ft.	☐	☐

Project Name:	AMS Modular Classroom 30x32	NRCC-PRF-01-E	Page 14 of 18
Project Address:	CZ 16 Mount Shasta	Calculation Date/Time:	19:14, Thu, May 21, 2015
Compliance Scope:	NewComplete	Input File Name:	EP6 AMS 30x32 for DSA - CZ16.cibd

NRCC-PRF-MCH-DETAILS -SECTION START-

A. MECHANICAL VENTILATION AND REHEAT (Adapted from 2013-NRCC-MCH-03-E) — Confirmed

1. DESIGN AIR FLOWS / 2. VENTILATION (§ 120.1)

CONDITIONED ZONE NAME	HEATING / COOLING SYSTEM ID	DESIGN PRIMARY AIR FLOW (CFM)	DESIGN PRIMARY MINIMUM AIR FLOW (CFM)	MINIMUM PRIMARY AIR FLOW FRACTION	MAXIMUM HEATING AIR FLOW (CFM)	MAXIMUM HEATING AIR FLOW FRACTION	DDC CONTROL (Y/N)	VENT SYSTEM ID	CONDITIONED AREA (ft2)	MIN. VENT PER AREA (CFM/ft2)	DESIGN NUM. OF PEOPLE	MIN. VENT PER PERSON (CFM/person)	REQ'D VENT AIR FLOW (CFM)	DESIGN VENT AIR FLOW (CFM)	TRANSFER AIRFLOW (CFM)	DCV (Y/N)	Pass	Fail
1-30x32 Classroom	AC-13	2,000	500	0.25	NA	NA	N	AC-13	960	0.38	48	8	360	360	NA	N	☐	☐
								TOTAL	960		48		360	360	NA		☐	☐

B. ZONAL SYSTEM AND TERMINAL UNIT SUMMARY													§ 140.4	
1.	2.	3.	4.		5.	6.	7.			8.			Confirmed	
System ID	System Type	Qty	Rated Capacity (kBtuh): Heating	Rated Capacity (kBtuh): Cooling	Economizer	Zone Name	Airflow (cfm): Design	Airflow (cfm): Min.	Airflow (cfm): Min. Ratio	Fan: BHP	Fan: Cycles	Fan: ECM Motor	Pass	Fail
30x32 Classroom5-TRM	VAVNoReheatBox	1	NA	NA	NA	1-30x32 Classroom	2000	500	0.25	NA	NA	☐	☐	☐

C. EXHAUST FAN SUMMARY
This Section Does Not Apply

Project Name:	AMS Modular Classroom 30x32	NRCC-PRF-01-E	Page 15 of 18
Project Address:	CZ 16 Mount Shasta	Calculation Date/Time:	19:14, Thu, May 21, 2015
Compliance Scope:	NewComplete	Input File Name:	EP6 AMS 30x32 for DSA - CZ16.cibd

D. DHW EQUIPMENT SUMMARY – (Adapted from NRCC-PLB-01) — § 110.3 — Confirmed

1. DHW Name	2. Fuel	3. Type	4. Qty	5. Distribution Type	6. Rated Input kBtuh	7. Efficiency	8. Pilot Energy (Btu/h)	9. External Tank Insulation	10. Vol	11. Standby Loss	12. Vol. of Suppl. Storage Tank	Pass	Fail
Rheem 82VP30-12	Electricity	Storage	1	Nonrecirculating	15	EF: 0.930	0	NA	30	0	NA	☐	☐

E. MULTI-FAMILY CENTRAL DHW SYSTEM DETAILS
This Section Does Not Apply

F. SOLAR HOT WATER HEATING SUMMARY (Adapted from NRCC-STH-01)
This Section Does Not Apply

G. MECHANICAL HVAC ACCEPTANCE TESTS & FORMS (Adapted from 2013-NRCC-MCH-01-E) — § RA4

Declaration of Required Acceptance Certificates (NRCA) – Acceptance Certificates that may be submitted. (Retain copies and verify forms are completed and signed to post in field for Field Inspector to verify).

Test Description		MCH-02A	MCH-03A	MCH-04A	MCH-05A	MCH-06A	MCH-07A	MCH-08A	MCH-09A	MCH-10A	MCH-11A	MCH-12A	MCH-13A	MCH-14A	MCH-15A	MCH-16A	MCH-17A	MCH-18A	Confirmed	
Equipment Requiring Testing or Verification	# of units	Outdoor Air	Single Zone Unitary	Air Dist. Ducts	Economizer Controls	DCV	Supply Fan VAV	Valve leakage	Supply Water Temp. Reset	Hyd. Variable Flow Control	Auto Demand Shed Control	FDD for DX Units	Auto FDD for Air & Zone	Dist. Energy Storage DX AC	TES Systems	Supply Air Temp. Reset	Condenser Water Reset Controls	ECMS	Pass	Fail
DHW1 - SHW	1	–	–	–	–	–	–	–	–	–	–	–	–	–	–	–	–	–	☐	☐
AC-13	1	X	–	–	–	–	X	–	–	–	X	–	–	–	–	X	–	–	☐	☐

Project Name:	AMS Modular Classroom 30x32	NRCC-PRF-01-E	Page 16 of 18
Project Address:	CZ 16 Mount Shasta	Calculation Date/Time:	19:14, Thu, May 21, 2015
Compliance Scope:	NewComplete	Input File Name:	EP6 AMS 30x32 for DSA - CZ16.cibd

NRCC-PRF-LTI-DETAILS -SECTION START-

A. INDOOR CONDITIONED LIGHTING CONTROL CREDITS (Adapted from NRCC-LTI-02-E) — § 140.6

Lighting Control Credits Schedule (includes all lighting controls installed in conditioned space for compliance credit per §140.6(a)2 and Table 140.6-A)

Location in Building	Occupancy Type (must meet requirements of Table 140.6-A)	Type/Description of Lighting Control (i.e., partial on occupancy sensor, manual dimming, etc.)	# of Units	Control Credit Calculation: Watts of Controlled Lighting	Control Credit Calculation: Power Adjustment Factor	Control Credit Calculation: Control Credit Watts	√ if Acceptance Test Required	Confirmed: Pass	Confirmed: Fail
5-1-30x32 Classroom	Classrooms, Lecture, Training, Vocational Areas	- none specified -	1	540	0.00	0		☐	☐

B. INDOOR CONDITIONED LIGHTING MANDATORY LIGHTING CONTROLS (Adapted from NRCC-LTI-02-E)	§ 130.1
This Section Does Not Apply	

§130.1(a) = Manual area controls; §130.1(b) = Multi Level; §130.1(c) = Auto Shut-Off; §130.1(d) = Mandatory Daylight; §130.1(e) = Demand Responsive

C. TAILORED METHOD LIGHTING POWER ALLOWANCE SUMMARY AND CHECKLIST (Adapted from NRCC-LTI-04-E)	§ 140.6
General lighting power (see Table D)	0
General lighting power from special function areas (see Table E)	NA
Additional "use it or lose it" (See Table G)	0
Total watts	0

D. GENERAL LIGHTING POWER (Adapted from NRCC-LTI-04-E)	§ 140.6-D
This Section Does Not Apply	

E. GENERAL LIGHTING FROM SPECIAL FUNCTION AREAS (Adapted from NRCC-LTI-04-E) — § 140.6(c) 3H

Room Number	Primary Function Area	Illuminance Value (LUX)	Room Cavity Ratio (Table G)	Allowed LPD	Floor Area (ft²)	Allowed Watts	Confirmed: Pass	Confirmed: Fail
NA	NA	NA	NA	NA	NA	NA	☐	☐

Note: Tailored Method for Special Function Areas is not currently implemented

Project Name:	AMS Modular Classroom 30x32	NRCC-PRF-01-E	Page 17 of 18
Project Address:	CZ 16 Mount Shasta	Calculation Date/Time:	19:14, Thu, May 21, 2015
Compliance Scope:	NewComplete	Input File Name:	EP6 AMS 30x32 for DSA - CZ16.cibd

F. ROOM CAVITY RATIO (Adapted from NRCC-LTI-04-E)

Rectangular Spaces

Room Number	Task/Activity Description	Room Length (ft)	Room Width (ft)	Room Cavity Height (ft)	RCR	Confirmed: Pass	Confirmed: Fail
NA	NA	NA	NA	NA	NA	☐	☐

Non-Rectangular Spaces
This Section Does Not Apply

Note: All applicable spaces are listed under the Non-Rectangular Spaces table

G. ADDITIONAL "USE IT OR LOSE IT" (Adapted from NRCC-LTI-04-E)

1. Wall Display	2. Combined Floor Display and Task Lighting	3. Combined Ornamental and Special Effects Lighting	4. Very Valuable Merchandise	Allowed Watts	Confirmed: Pass	Confirmed: Fail
0	0	0	0	0	☐	☐

5. Wall Display
This Section Does Not Apply

6. Floor Display and Task Lighting
This Section Does Not Apply

7. Combined Ornamental and Special Effects Lighting
This Section Does Not Apply

8. Very Valuable Merchandise
This Section Does Not Apply

Project Name:	AMS Modular Classroom 30x32	NRCC-PRF-01-E	Page 18 of 18
Project Address:	CZ 16 Mount Shasta	Calculation Date/Time:	19:14, Thu, May 21, 2015
Compliance Scope:	NewComplete	Input File Name:	EP6 AMS 30x32 for DSA - CZ16.cibd

H. INDOOR & OUTDOOR LIGHTING ACCEPTANCE TESTS & FORMS (Adapted from NRCC-LTI-01-E and NRCC-LTO-01-E) — § 130.4

Declaration of Required Acceptance Certificates (NRCA) –Acceptance Certificates that must be verified in the field. (Retain copies and verify forms are completed and signed to post in field for Field Inspector to verify).

Test Description		Indoor: NRCA-LTI-02-A	Indoor: NRCA-LTI-03-A	Indoor: NRCA-LTI-04-A	Outdoor: NRCA-LTO-02-A	Confirmed: Pass	Confirmed: Fail
Equipment Requiring Testing or Verification	# of units	Occ Sensors / Auto Time Switch	Auto Daylight	Demand Responsive	Outdoor Controls		
Occupant Sensors	0	☐	☐	☐	☐	☐	☐
Automatic Time Switch	0	☐	☐	☐	☐	☐	☐
Automatic Daylighting	0	☐	☐	☐	☐	☐	☐
Demand Responsive	0	☐	☐	☐	☐	☐	☐
Outdoor Controls	0	☐	☐	☐	☐	☐	☐

APPROVED
DIVISION OF STATE ARCHITECT
HIGH PERFORMANCE SECTION
APP.# 02-113921 DATE: 6/10/15
Lydia Bowen C.E.P.E

02-113921 – 30'x32' – 150'x32' EXPOSED STEEL

AMS®
American Modular Systems
787 Spreckels Ave.Manteca, CA 95336
Phone (209) 825-1921 - Fax (209) 825-7018
americanmodular.com

MODULAR MANUFACTURER PROPRIETARY STATEMENT

THESE DRAWINGS AND THE MATERIAL CONTAINED THEREIN ARE THE PROPERTY OF AMERICAN MODULAR SYSTEMS, INC. (AMS) AND SHALL NOT BE REPRODUCED, COPIED OR OTHERWISE DISPOSED OF DIRECTLY OR INDIRECTLY AND SHALL NOT BE USED IN WHOLE OR IN PART TO ASSIST IN THE MAKING OF OR FOR THE PURPOSE OF FURNISHING ANY INFORMATION FOR THE MAKING OF DRAWINGS, PRINTS, APPARATUS OR PARTS THEREOF WITHOUT THE FULL KNOWLEDGE AND WRITTEN CONSENT OF AMS. ALL PATENTABLE MATERIAL CONTAINED HEREIN AND ORIGINATING WITH AMS SHALL BE THE SOLE PROPERTY OF AMS.

PRE-CHECKED SET NAME

30' x 32' THRU 150' x 32' BUILDINGS

SITE SPECIFIC PROJECT NAME

SHEET TITLE

ENERGY CALCULATIONS

MANUFACTURER PROFESSIONAL OF RECORD ON PC

LICENSED ARCHITECT
RANDALL PATRICK CAVANAGH
No. C12631
Ren. 03-31-17
STATE OF CALIFORNIA

PROJECT SPECIFIC STATE AGENCY APPROVAL

IDENTIFICATION STAMP
DIV. OF THE STATE ARCHITECT
02 116495
AC – FLS SS
DATE 12-18-2017

ORIGINAL PC STATE AGENCY APPROVAL

IDENTIFICATION STAMP
DIV. OF THE STATE ARCHITECT
CA. DEPT. OF GENERAL SERVICES
PC 02-113921
AC FLS SS
DATE 6/19/2015

PRE-CHECK (PC) DOCUMENT – CODE: 2013 CBC
A SEPARATE PROJECT APPLICATION FOR CONSTRUCTION IS REQUIRED

REVISIONS

1
2
3
4

DRAWN BY:
SCALE: AS NOTED
DATE:

SHEET NUMBER

EN.2

American Modular Systems | Gen7

Performance Runs By Zone & 45° Orientation

2013 Energy Code

NOTE: Enter data in colored cells only.

Project Name:	**150' x 32' Modular Classroom**	DSA Application #: 0X-XXXXX	
Date of Title 24 Report:	**5/21/2015**	DSA File No.:	
Model Name and Option:	**AMS 150 x 32 for DSA.bld**	HVAC Units: Model ID	Efficiency: EER, SEER
Module's Floor Area:	**4800**	Additional info.	
Additional Information:		Additional info.	

Comments: 1. Input data from performance runs in columns 2 and 3 for each climate zone worksheet. Subtract process and receptacle loads
2. Input Module detailed information on Table A - One Spreadsheet Tab per HVAC System (i.e. HP, RTU)

AMS 150 x 32 for DSA.bld
Climate Zone: 14 Reference City: China Lake

Front Orientation	Std Budget kBtu/sf-yr	Prop. Design kBtu/sf-yr	Compliance margin
0	510.60	442.00	13.4%
45	542.80	470.90	13.2%
90	543.20	479.50	11.7%
135	520.70	459.60	11.7%
180	508.90	443.10	12.9%
225	540.50	472.90	12.5%
270	540.70	481.10	11.0%
315	519.00	459.60	11.4%

AMS 150 x 32 for DSA.bld
Climate Zone: 15 Reference City: El Centro

Front Orientation	Std Budget kBtu/sf-yr	Prop. Design kBtu/sf-yr	Compliance margin
0	561.90	470.90	16.2%
45	590.50	492.80	16.5%
90	582.90	502.70	13.8%
135	563.30	487.30	13.5%
180	560.10	472.30	15.7%
225	587.90	494.80	15.8%
270	575.70	503.90	12.5%
315	551.50	487.30	11.6%

AMS 150 x 32 for DSA.bld
Climate Zone: 16 Reference City: Mount Shasta

Front Orientation	Std Budget kBtu/sf-yr	Prop. Design kBtu/sf-yr	Compliance margin
0	469.80	404.30	13.9%
45	490.20	424.60	13.4%
90	483.60	428.80	11.3%
135	465.20	413.20	11.2%
180	468.10	405.20	13.4%
225	487.70	426.50	12.5%
270	481.00	430.50	10.5%
315	463.40	413.20	10.8%

Table A - Module Information per HVAC system.
Climate Zones: 1 thru 16 (if different, use another tab)

Envelope: Insulation Types	Insulation R Values	
Roof, Type 1.	**Standing Seam**	
Roof, Type 2.	R-19	
Wall, Type 1	**R-13**	
Wall, Type 2	**Option: R-13 batt + R-5 c.i.**	
Floor, Type 1	**Concrete Slab above**	
Floor, Type 2		
Glazing: Typical Glass Type	Open	Fixed
U-Factor:	0.78 (NFRC)	
RSHGC:	0.43 SHGC (NFRC)	
VT:	37%	
HVAC Units: Model ID	Efficiency: EER, SEER	
Bard S49H1 (SPVU) - 5 ton	**10.4 EER (12.3 SEER)**	
Bard S49H1 (SPVU) - 5 ton	**3.2 COP (7.7 HSPF)**	

Notes:
When a unique PC design contains multiple sizes, the smallest and the largest potential size should be modeled at 45 compass intervals in each Climate Zone for which the PC seeks approval.
The electronically-generated computer file(s) that produced the worst case energy use results for each climate zone for each unique PC design configuration that is modeled should be provided to DSA.

Brummitt Energy Associates, Inc. www.brummitt.com

Project Name:	AMS Modular Classroom 150x32	NRCC-PRF-01-E	Page 1 of 21
Project Address:	CZ 16\ Mount Shasta	Calculation Date/Time:	19:17, Thu, May 21, 2015
Compliance Scope:	NewComplete	Input File Name:	EP6 AMS 150x32 for DSA - CZ16.cibd

A. PROJECT GENERAL INFORMATION

1.	Project Location (city)	Mount Shasta	7.	# of dwelling units	0
2.	CA Zip Code		8.	Compliance Software (version)	CBECC-Com 2013-3b (717)
3.	Climate Zone	16	9.	Building Orientation (deg)	(W) 270 deg
4.	Total Conditioned Floor Area	4,800 ft²	10.	Permitted Scope of Work	NewComplete
5.	Total Unconditioned Floor Area	0 ft²	11.	Building Type(s)	Nonresidential
6.	# of Stories (Habitable Above Grade)	1			

B. COMPLIANCE RESULTS FOR PERFORMANCE COMPONENTS § 140.1

BUILDING COMPLIES

1. Energy Component	2. Standard Design (TDV)	3. Proposed Design (TDV)	4. Compliance Margin (TDV)	5. Percent Better than Standard
Space Heating	38.5	110.8	-72.3	-187.8%
Space Cooling	98.3	126.8	-28.5	-29.0%
Indoor Fans	191.9	18.3	173.6	90.5%
Heat Rejection	--	--	--	--
Pumps & Misc.	--	--	--	--
Domestic Hot Water	24.9	79.4	-54.5	-218.9%
Indoor Lighting	60.6	28.4	32.2	53.1%
COMPLIANCE TOTAL	414.2	363.7	50.5	12.2%
Receptacle	66.8	66.8		0.0%
Process	--	--		--
Process Ltg	--	--		--
TOTAL	481.0	430.5		10.5%

CA Building Energy Efficiency Standards- 2013 Nonresidential Compliance Report Version: NRCC-PRF-01-E-03232015-717

Project Name:	AMS Modular Classroom 150x32	NRCC-PRF-01-E	Page 2 of 21
Project Address:	CZ 16\ Mount Shasta	Calculation Date/Time:	19:17, Thu, May 21, 2015
Compliance Scope:	NewComplete	Input File Name:	EP6 AMS 150x32 for DSA - CZ16.cibd

C. PRIORITY PLAN CHECK/ INSPECTION ITEMS (in order of highest to lowest TDV energy savings)

1st	Indoor Fans: Check envelope and mechanical
2nd	Indoor Lighting: Check lighting
3rd	Heat Rejection: Check envelope and mechanical
4th	Pumps & Misc.: Check mechanical
5th	Space Cooling: Check envelope and mechanical
6th	Domestic Hot Water: Check mechanical
7th	Space Heating: Check envelope and mechanical

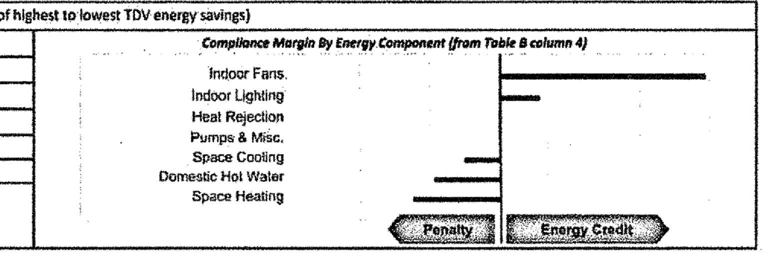

D. EXCEPTIONAL CONDITIONS

The compliance model includes HVAC equipment with capacities that differ from the building plans, presumably to meet unmet load hour requirements. Verify that the equipment in the design provides adequate cooling and heating capacity for the spaces served.

E. HERS VERIFICATION

This Section Does Not Apply

F. ADDITIONAL REMARKS

None Provided

CA Building Energy Efficiency Standards- 2013 Nonresidential Compliance Report Version: NRCC-PRF-01-E-03232015-717

Project Name:	AMS Modular Classroom 150x32	NRCC-PRF-01-E	Page 3 of 21
Project Address:	CZ 16\ Mount Shasta	Calculation Date/Time:	19:17, Thu, May 21, 2015
Compliance Scope:	NewComplete	Input File Name:	EP6 AMS 150x32 for DSA - CZ16.cibd

G. COMPLIANCE PATH & CERTIFICATE OF COMPLIANCE SUMMARY

Identify which building components use the performance or prescriptive path for compliance. "NA"= not in project.
For components that utilize the performance path, indicate the sheet number that includes mandatory notes on plans.

Building Component	Compliance Path	Compliance Forms *(required for submittal)*	Location of Mandatory Notes on Plans
Envelope	☒ Performance	NRCC-PRF-ENV-DETAILS (section of the NRCC-PRF-01-E)	
	☐ Prescriptive	NRCC-ENV-01 / 02 / 03 / 04 / 05 / 06-E	
	☐ NA		
Mechanical	☒ Performance	NRCC-PRF-MCH-DETAILS (section of the NRCC-PRF-01-E)	
	☐ Prescriptive	NRCC-MCH-01 / 02 / 03 / 04 / 05 / 06 / 07-E	
	☐ NA		
Domestic Hot Water	☒ Performance	NRCC-PRF-PLB-DETAILS (section of the NRCC-PRF-01-E)	
	☐ Prescriptive	NRCC-PLB-01-E	
	☐ NA		
Lighting (Indoor Conditioned)	☒ Performance	NRCC-PRF-LTI-DETAILS (section of the NRCC-PRF-01-E)	
	☐ Prescriptive	NRCC-LTI-01 / 02 / 03 / 04 / 05-E	
	☐ NA		
Covered Process: Commercial Kitchens	☐ Performance	S2 (section of the NRCC-PRF-01-E)	
	☐ Prescriptive	NRCC-PRC-01/ 03-E	
	☒ NA		
Covered Process: Computer Rooms	☐ Performance	S3 (section of the NRCC-PRF-01-E)	
	☐ Prescriptive	NRCC-PRC-01/ 04-E	
	☒ NA		
Covered Process: Laboratory Exhaust	☐ Performance	S4 (section of the NRCC-PRF-01-E)	
	☐ Prescriptive	NRCC-PRC-01/ 09-E	
	☒ NA		

CA Building Energy Efficiency Standards- 2013 Nonresidential Compliance Report Version: NRCC-PRF-01-E-03232015-717

Project Name:	AMS Modular Classroom 150x32	NRCC-PRF-01-E	Page 4 of 21
Project Address:	CZ 16\ Mount Shasta	Calculation Date/Time:	19:17, Thu, May 21, 2015
Compliance Scope:	NewComplete	Input File Name:	EP6 AMS 150x32 for DSA - CZ16.cibd

G. COMPLIANCE PATH & CERTIFICATE OF COMPLIANCE SUMMARY

The following building components are only eligible for prescriptive compliance. Indicate which are relevant to the project. | *The following building components may have mandatory requirements per Part 6. Indicate which are relevant to the project.*

Yes	NA	Prescriptive Requirement	Compliance Forms	Yes	NA	Mandatory Requirement	Compliance Forms
☐	☒	Lighting (Indoor Unconditioned) §140.6	NRCC-LTI-01 / 02 / 03 / 04 / 05-E	☐ ☐	☒ ☒	Commissioning: §120.8 Simple Systems Complex Systems	NRCC-CXR-01 / 02 / 03 / 05-E NRCC-CXR-01 / 02 / 04 / 05-E
☐	☒	Lighting (Outdoor) §140.7	NRCC-LTO-01 / 02 / 03-E	☐	☒	Electrical: §130.5	NRCC-ELC-01-E
☐	☒	Lighting (Sign) §140.8	NRCC-LTS-01-E	☒	☐	Solar Ready: §110.10	NRCC-SRA-01 / 02-E
☐	☒	Solar Thermal Water Heating: §140.5	NRCC-STH-01-E	☐ ☐ ☐ ☐ ☐ ☐	☒ ☒ ☒ ☒ ☒ ☒	Covered Process: §120.6 Parking Garage Commercial Refrigeration Warehouse Refrigeration Compressed Air Process Boilers	NRCC-PRC-01-E NRCC-PRC-02-E NRCC-PRC-05-E NRCC-PRC-06/07/08-E NRCC-PRC-10-E NRCC-PRC-11-E

CA Building Energy Efficiency Standards- 2013 Nonresidential Compliance Report Version: NRCC-PRF-01-E-03232015-717

Project Name:	AMS Modular Classroom 150x32	NRCC-PRF-01-E	Page 5 of 21
Project Address:	CZ 16\ Mount Shasta	Calculation Date/Time:	19:17, Thu, May 21, 2015
Compliance Scope:	NewComplete	Input File Name:	EP6 AMS 150x32 for DSA - CZ16.cibd

H. CERTIFICATE OF INSTALLATION, CERTIFICATE OF ACCEPTANCE & CERTIFICATE OF VERIFICATION SUMMARY (NRCI/NRCA/NRCV) –
Documentation Author to indicate which Certificates must be submitted for the features to be recognized for compliance
(Retain copies and verify forms are completed and signed to post in field for Field Inspector to verify).
See Tables G. and H. in MCH and LTI Details Sections for Acceptance Tests and forms by equipment.

Building Component	Compliance Forms *(required for submittal)*	Confirmed Pass	Confirmed Fail
Envelope	☒ NRCI-ENV-01-E - For all buildings	☐	☐
	☐ NRCA-ENV-02-F- NFRC label verification for fenestration	☐	☐
Mechanical	☒ NRCI-MCH-01-E - For all buildings with Mechanical Systems	☐	☐
	☒ NRCA-MCH-02-A- Outdoor Air	☐	☐
	☐ NRCA-MCH-03-A – Constant Volume Single Zone HVAC	☐	☐
	☐ NRCA-MCH-04-H- Air Distribution Duct Leakage	☐	☐
	☐ NRCA-MCH-05-A- Air Economizer Controls	☐	☐
	☐ NRCA-MCH-06-A- Demand Control Ventilation	☐	☐
	☒ NRCA-MCH-07-A – Supply Fan Variable Flow Controls	☐	☐
	☐ NRCA-MCH-08-A- Valve Leakage Test	☐	☐
	☐ NRCA-MCH-09-A – Supply Water Temp Reset Controls	☐	☐
	☐ NRCA-MCH-10-A- Hydronic System Variable Flow Controls	☐	☐
	☐ NRCA-MCH-11-A – Auto Demand Shed Controls	☐	☐
	☐ NRCA-MCH-12-A- Packaged Direct Expansion Units	☐	☐
	☐ NRCA-MCH-13-A- Air Handling Units and Zone Terminal Units	☐	☐
	☐ NRCA-MCH-14-A- Distributed Energy Storage	☐	☐
	☐ NRCA-MCH-15-A – Thermal Energy Storage	☐	☐
	☐ NRCA-MCH-16-A- Supply Air Temp Reset Controls	☐	☐
	☐ NRCA-MCH-17-A – Condensate Water Temp Reset Controls	☐	☐
	☐ NRCA-MCH-18-A- Energy Management Controls Systems	☐	☐
	☐ NRCV-MCH-04-H- Duct Leakage Test	☐	☐

CA Building Energy Efficiency Standards- 2013 Nonresidential Compliance Report Version: NRCC-PRF-01-E-03232015-717

Project Name:	AMS Modular Classroom 150x32	NRCC-PRF-01-E	Page 6 of 21
Project Address:	CZ 16\ Mount Shasta	Calculation Date/Time:	19:17, Thu, May 21, 2015
Compliance Scope:	NewComplete	Input File Name:	EP6 AMS 150x32 for DSA - CZ16.cibd

H. CERTIFICATE OF INSTALLATION, CERTIFICATE OF ACCEPTANCE & CERTIFICATE OF VERIFICATION SUMMARY (NRCI/NRCA/NRCV) –
Documentation Author to indicate which Certificates must be submitted for the features to be recognized for compliance
(Retain copies and verify forms are completed and signed to post in field for Field Inspector to verify).
See Tables G. and H. in MCH and LTI Details Sections for Acceptance Tests and forms by equipment.

Building Component	Compliance Forms *(required for submittal)*	Confirmed Pass	Confirmed Fail
Plumbing	☐ NRCI-PLB-01-E - For all buildings with Plumbing Systems	☐	☐
	☐ NRCI-PLB-02-E - required on central systems in high-rise residential, hotel/motel application.	☐	☐
	☐ NRCI-PLB-03-E - Single dwelling unit systems in high-rise residential, hotel/motel application.	☐	☐
	☐ NRCI-PLB-21-E - HERS verified central systems in high-rise residential, hotel/motel application.	☐	☐
	☐ NRCI-PLB-22-E - HERS verified single dwelling unit systems in high-rise residential, hotel/motel application,	☐	☐
	☐ NRCV-PLB-21-H- HERS verified central systems in high-rise residential, hotel/motel application.	☐	☐
	☐ NRCV-PLB-22-H - HERS verified single dwelling unit systems in high-rise residential, hotel/motel application.	☐	☐
	☐ NRCI-STH-01-E - Any solar water heating	☐	☐
Indoor Lighting	☒ NRCI-LTI-01-E - For all buildings	☐	☐
	☐ NRCI-LTI-02-E - Lighting control system, or for an Energy Management Control System (EMCS)	☐	☐
	☐ NRCI-LTI-03-E - Line-voltage track lighting integral current limiter, or for a supplementary overcurrent protection panel used to energize only line-voltage track lighting	☐	☐
	☐ NRCI-LTI-04-E - Two interlocked systems serving an auditorium, a convention center, a conference room, or a theater	☐	☐
	☐ NRCI-LTI-05-E - Lighting Control Credit Power Adjustment Factor (PAF)	☐	☐
	☐ NRCI-LTI-06-E - Additional wattage installed in a video conferencing studio	☐	☐
	☐ NRCA-LTI-02-A - Occupancy sensors and automatic time switch controls.	☐	☐
	☐ NRCA-LTI-03-A - Automatic daylighting controls	☐	☐
	☐ NRCA-LTI-04-A - Demand responsive lighting controls	☐	☐
Outdoor Lighting	☐ NRCI-LTO-01-E – Outdoor Lighting	☐	☐
	☐ NRCI-LTO-01-E- EMCS Lighting Control System	☐	☐
	☐ NRCA-LTO-02-A – Outdoor Lighting Control	☐	☐
Sign Lighting	☐ NRCI-LTS-01-E – Sign Lighting	☐	☐
Electrical	☐ NRCI-ELC-01-E – Electrical Power Distribution	☐	☐
Photovoltaic	☐ NRCI-SPV-01-E Photovoltaic Systems	☐	☐

CA Building Energy Efficiency Standards- 2013 Nonresidential Compliance Report Version: NRCC-PRF-01-E-03232015-717

Project Name:	AMS Modular Classroom 150x32	NRCC-PRF-01-E	Page 7 of 21
Project Address:	CZ 16\ Mount Shasta	Calculation Date/Time:	19:17, Thu, May 21, 2015
Compliance Scope:	NewComplete	Input File Name:	EP6 AMS 150x32 for DSA - CZ16.cibd

H. CERTIFICATE OF INSTALLATION, CERTIFICATE OF ACCEPTANCE & CERTIFICATE OF VERIFICATION SUMMARY (NRCI/NRCA/NRCV) –
Documentation Author to indicate which Certificates must be submitted for the features to be recognized for compliance
(Retain copies and verify forms are completed and signed to post in field for Field Inspector to verify).
See Tables G. and H. in MCH and LTI Details Sections for Acceptance Tests and forms by equipment.

Building Component	Compliance Forms *(required for submittal)*	Confirmed Pass	Confirmed Fail
Covered Process	☐ NRCI-PRC-01-E Refrigerated Warehouse	☐	☐
	☐ NRCA-PRC-01-F- Compressed Air Systems	☐	☐
	☐ NRCA-PRC-02-F- Kitchen Exhaust	☐	☐
	☐ NRCA-PRC-03-F- Garage Exhaust	☐	☐
	☐ NRCA-PRC-04-F- Refrigerated Warehouse- Evaporator Fan Motor Controls	☐	☐
	☐ NRCA-PRC-05-F- Refrigerated Warehouse- Evaporative Condenser Controls	☐	☐
	☐ NRCA-PRC-06-F- Refrigerated Warehouse- Air Cooled Condenser Controls	☐	☐
	☐ NRCA-PRC-07F- Refrigerated Warehouse- Variable Speed Compressor	☐	☐
	☐ NRCA-PRC-08-F- Electrical Resistance Underslab Heating System	☐	☐

I. ENVELOPE GENERAL INFORMATION (See NRCC-PRF-ENV-DETAILS for more information)

						Confirmed Pass	Confirmed Fail
1.	Total Conditioned Floor Area	4,800 ft²	5.	Number of Floors Above Grade	1		
2.	Total Unconditioned Floor Area	0 ft²	6.	Number of Floors Below Grade	0		
3.	Addition Conditioned Floor Area	0 ft²					
4.	Addition Unconditioned Floor Area	0 ft²					

7. Opaque Surfaces & Orientation	8. Total Gross Surface Area	9. Total Fenestration Area	10. Window to Wall Ratio	Pass	Fail
North Wall	366 ft²	0 ft²	00.0%	☐	☐
East Wall	1,650 ft²	800 ft²	48.5%	☐	☐
South Wall	366 ft²	0 ft²	00.0%	☐	☐
West Wall	1,650 ft²	800 ft²	48.5%	☐	☐
Total	4,032 ft²	1,600 ft²	39.7%	☐	☐
Roof	4,800 ft²	0 ft²	00.0%	☐	☐

CA Building Energy Efficiency Standards- 2013 Nonresidential Compliance Report Version: NRCC-PRF-01-E-03232015-717

Project Name:	AMS Modular Classroom 150x32	NRCC-PRF-01-E	Page 8 of 21
Project Address:	CZ 16\ Mount Shasta	Calculation Date/Time:	19:17, Thu, May 21, 2015
Compliance Scope:	NewComplete	Input File Name:	EP6 AMS 150x32 for DSA - CZ16.cibd

J. FENESTRATION ASSEMBLY SUMMARY § 110.6

1. Fenestration Assembly Name / Tag or I.D.	2. Fenestration Type	3. Certification Method[1]	4. Assembly Method	5. Area ft²	6. Overall U-factor	7. Overall SHGC	8. Overall VT	Pass	Fail
All Weather 3/16 Grey / 1/8 Clear NFRC	VerticalFenestration	NFRCRated	Manufactured	1,600	0.78	0.43	0.37	☐	☐

[1] Newly installed fenestration shall have a certified NFRC Label Certificate or use the CEC default tables found in Table 116-A and Table 116B. Site-built fenestration less than 1,000 ft², or more than or equal to 1,000 ft² see Reference Nonresidential Appendix NA6.

Taking compliance credit for fenestration shading devices? (If "Yes", see NRCC-PRF-ENV-DETAILS for more information)	No

K. OPAQUE SURFACE ASSEMBLY SUMMARY § 120.7/ § 140.3

1. Surface Name	2. Surface Type	3. Area (ft²)	4. Framing Type	5. Cavity R-Value	6. Continuous R-Value	7. U-Factor / F-Factor / C-Factor	8. Condition Status	Pass	Fail
Concr. Slab over Crawlspace	ExteriorFloor	4,800	NA	0	NA	U-Factor: 0.210	New	☐	☐
Roof: U 0.70 per EZFrame12	Roof	4,800	Metal	19	2	U-Factor: 0.071	New	☐	☐
R-13 in 4 wood frame	ExteriorWall	4,032	Wood	13	NA	U-Factor: 0.102	New	☐	☐

L. ROOFING PRODUCT SUMMARY § 140.3

1. Product Type	2. Product ≥25 lb ft²	3. Aged Solar Reflectance	4. Thermal Emittance	5. SRI	6. Cool Roof Credit	7. CRRC Product ID Number	Pass	Fail
Roof: U 0.70 per EZFrame12	No	0.08	0.75	NA	No	NA	☐	☐

CA Building Energy Efficiency Standards- 2013 Nonresidential Compliance Report Version: NRCC-PRF-01-E-03232015-717

Project Name:	AMS Modular Classroom 150x32	NRCC-PRF-01-E	Page 9 of 21
Project Address:	CZ 16\ Mount Shasta	Calculation Date/Time:	19:17, Thu, May 21, 2015
Compliance Scope:	NewComplete	Input File Name:	EP6 AMS 150x32 for DSA - CZ16.cibd

M. HVAC SYSTEM SUMMARY (see NRCC-PRF-MCH-DETAILS for more information) § 110.1 / § 110.2

Dry System Equipment [1] (Fan & Economizer info included below in Table N)

1. Equip Name	2. Equip Type	3. System Type (Simple [3] or Complex [4])	4. Qty	5. Total Heating Output (kBtu/h)	6. Supp Heat Source (Y/N)	7. Supp Heat Output (kBtuh)	8. Total Cooling Output (kBtu/h)	9. Efficiency Cooling	9. Efficiency Heating	10. Acceptance Testing Required? (Y/N) [5]	Pass	Fail
AC-13	SZVAVHP	Complex	1	62	No	0	63	SEER-13.0	HSPF-7.7	Yes	☐	☐
AC-123	SZVAVHP	Complex	1	62	No	0	63	SEER-13.0	HSPF-7.7	Yes	☐	☐
AC-135	SZVAVHP	Complex	1	62	No	0	63	SEER-13.0	HSPF-7.7	Yes	☐	☐
AC-147	SZVAVHP	Complex	1	62	No	0	63	SEER-13.0	HSPF-7.7	Yes	☐	☐
AC-159	SZVAVHP	Complex	1	62	No	0	63	SEER-13.0	HSPF-7.7	Yes	☐	☐

Wet System Equipment [2] / Pumps

11. Equip Name	12. Equip Type	13. Qty	14. Vol (gal)	15. Rated Capacity (kBtu/h)	16. Efficiency	17. Standby Loss	18. Tank Ext. R Value	19. Qty	20. GPM	21. HP	22. VSD (Y/N)	Pass	Fail
Rheem 82VP30-12	Storage	1	30	15	EF: 0.930	NA	NA	NA	NA	NA	No	☐	☐

[1] Dry System Equipment includes furnaces, air handling units, heat pumps, etc.
[2] Wet System Equipment includes boilers, chillers, cooling towers, water heaters, etc.
[3] Simple Systems must complete NRCC-CXR-03-E commissioning design review form
[4] Complex Systems must complete NRCC-CXR-04-E commissioning design review form
[5] A summary of which acceptance tests are applicable is provided in NRCC-PRF-MCH-DETAILS

Discrepancy between modeled and designed equipment sizing? (if "Yes", see Table F. "Additional Remarks" for an explanation)	Yes

N. ECONOMIZER & FAN SYSTEMS SUMMARY[1] § 140.4

1. Equip Name	2. Outside Air CFM	3. Supply Fan CFM	HP	BHP	TSP (inch WC)	Control	4. Return Fan CFM	HP	BHP	TSP (inch WC)	Control	5. Economizer Type (if present)	Pass	Fail
AC-13	360	2000	0.750	NA	1.25	VariableSpeedDrive	NA	NA	NA	NA	NA	NoEconomizer	☐	☐

CA Building Energy Efficiency Standards- 2013 Nonresidential Compliance Report Version: NRCC-PRF-01-E-03232015-717

APPROVED
DIVISION OF STATE ARCHITECT
HIGH PERFORMANCE SECTION
APP.# 02-113921 DATE: 6/10/15
Lydia Barron C.E.P.E.

American Modular Systems
787 Spreckels Ave. Manteca, CA 95336
Phone (209) 825-1921 - Fax (209) 825-7018
americanmodular.com

MODULAR MANUFACTURER PROPRIETARY STATEMENT

THESE DRAWINGS AND THE MATERIAL CONTAINED THEREIN ARE THE PROPERTY OF AMERICAN MODULAR SYSTEMS, INC. (AMS) AND SHALL NOT BE REPRODUCED, COPIED OR OTHERWISE DISPOSED OF DIRECTLY OR INDIRECTLY AND SHALL NOT BE USED IN WHOLE OR IN PART TO ASSIST IN THE MAKING OF OR FOR THE PURPOSE OF FURNISHING ANY INFORMATION FOR THE MAKING OF DRAWINGS, PRINTS, APPARATUS OR PARTS THEREOF WITHOUT THE FULL KNOWLEDGE AND WRITTEN CONSENT OF AMS. ALL PATENTABLE MATERIAL CONTAINED HEREIN AND ORIGINATING WITH AMS SHALL BE THE SOLE PROPERTY OF AMS.

PRE-CHECKED SET NAME

30' x 32' THRU 150' x 32' BUILDINGS

SITE SPECIFIC PROJECT NAME

SHEET TITLE

ENERGY CALCULATIONS

MANUFACTURER PROFESSIONAL OF RECORD ON PC

LICENSED ARCHITECT RANDALL PATRICK CAVANAGH No. C12631 Ren. 03-31-17 STATE OF CALIFORNIA

REGISTERED PROFESSIONAL ENGINEER D. FRENCH No. S3380 Exp:03/31/16 STRUCTURAL STATE OF CALIFORNIA

05/19/2015

PROJECT SPECIFIC STATE AGENCY APPROVAL

IDENTIFICATION STAMP DIV. OF THE STATE ARCHITECT
02 116495
AC — SS
DATE 12-18-2017

ORIGINAL PC STATE AGENCY APPROVAL

IDENTIFICATION STAMP
DIV. OF THE STATE ARCHITECT
CA. DEPT. OF GENERAL SERVICES
PC 02-113921
AC ✓ FLS ✓ SS
DATE 6/19/2015

PRE-CHECK (PC) DOCUMENT – CODE: 2013 CBC
A SEPARATE PROJECT APPLICATION FOR CONSTRUCTION IS REQUIRED

REVISIONS

1	
2	
3	
4	

DRAWN BY:
SCALE: AS NOTED
DATE:

SHEET NUMBER

EN.3

02–113921 – 30'x32' – 150'x32' EXPOSED STEEL SAVED: 6/6/2015 10:14 AM 1:48 PM PLOTTED: 6/8/2015

N. ECONOMIZER & FAN SYSTEMS SUMMARY[1] § 140.4

1.	2.	3.					4.					5.	Confirmed	
Equip Name	Outside Air	Supply Fan					Return Fan					Economizer Type (If present)	Pass	Fail
	CFM	CFM	HP	BHP	TSP (inch WC)	Control	CFM	HP	BHP	TSP (inch WC)	Control			
AC-123	360	2000	0.750	NA	1.25	VariableSpeedDrive	NA	NA	NA	NA	NA	NoEconomizer	☐	☐
AC-135	360	2000	0.750	NA	1.25	VariableSpeedDrive	NA	NA	NA	NA	NA	NoEconomizer	☐	☐
AC-147	360	2000	0.750	NA	1.25	VariableSpeedDrive	NA	NA	NA	NA	NA	NoEconomizer	☐	☐
AC-159	360	2000	0.750	NA	1.25	VariableSpeedDrive	NA	NA	NA	NA	NA	NoEconomizer	☐	☐

[1] *Mechanical ventilation calculations and exhaust fans are included in the NRCC-PRF-MCH-DETAILS section*

O. EQUIPMENT CONTROLS § 120.2

1.	2.	3.	Confirmed	
Equip Name	Equip Type	Controls	Pass	Fail
AC-13	SZVAVHP	No DCV Controls No Economizer No Supply Air Temp. Control	☐	☐
AC-123	SZVAVHP	No DCV Controls No Economizer No Supply Air Temp. Control	☐	☐
AC-135	SZVAVHP	No DCV Controls No Economizer No Supply Air Temp. Control	☐	☐
AC-147	SZVAVHP	No DCV Controls No Economizer No Supply Air Temp. Control	☐	☐
AC-159	SZVAVHP	No DCV Controls No Economizer No Supply Air Temp. Control	☐	☐
DHW1 - SHW	Service Hot Water, Primary Only	Fixed Temperature Control, No DDC	☐	☐

P. SYSTEM DISTRIBUTION SUMMARY § 120.4/ § 140.4(l)

This Section Does Not Apply

Does the Project include Zonal Systems? (If "Yes", see NRCC-PRF-MCH-DETAILS for system information)	No
Does the Project include a Solar Hot Water System? (If "Yes", see NRCC-PRF-MCH-DETAILS for system information)	No
Multifamily or Hotel/ Motel Occupancy? (If "Yes", see NRCC-PRF-MCH-DETAILS for DHW system information)	No

Q. INDOOR CONDITIONED LIGHTING GENERAL INFO (see NRCC-PRF-LTI-DETAILS for more info) § 140.6

1.	2.	3.	4.	5.		Confirmed	
Occupancy Type [1]	Conditioned Floor Area [2] (ft²)	Installed Lighting Power (Watts)	Lighting Control Credits (Watts)	Additional (Custom) Allowance		Pass	Fail
				Area Category Footnotes (Watts)	Tailored Method (Watts)	☐	☐
Classrooms, Lecture, Training, Vocational Areas	4,800	2,700	0	0	0	☐	☐
Building Totals:	4,800	2,700		0			

[1] *See Table 140.6-C*
[2] *See NRCC-LTI-01-E for unconditioned spaces*

R. INDOOR CONDITIONED LIGHTING SCHEDULE (Adapted from NRCC-LTI-01-E)[1] § 130.0

Luminaire Schedule (includes all permanent installed lighting in conditioned space, and portable lighting over 0.3 w/ft² in offices)		Installed Watts (Conditioned)					Confirmed	
Name or Item Tag	Complete Luminaire Description (i.e., 3-lamp fluorescent troffer, F32T8, one dimmable electronic ballast)	Watts per luminaire	How Wattage is Determined: CEC Default from NA8	According to §130.0(c)	Total Number Luminaires	Installed Watts	Pass	Fail
VTLED	A - 60w LED	60	Yes	No	45	2,700	☐	☐

[1] *If lighting power densities were used in the compliance model Building Departments will need to check prescriptive forms for Luminaire Schedule details.*

S1. COVERED PROCESS SUMMARY – ENCLOSED PARKING GARAGES § 140.9

This Section Does Not Apply

S2. COVERED PROCESS SUMMARY – COMMERCIAL KITCHENS § 140.9

This Section Does Not Apply

S3. COVERED PROCESS SUMMARY – COMPUTER ROOMS § 140.9

This Section Does Not Apply

S4. COVERED PROCESS SUMMARY – LABORATORY EXHAUSTS § 140.9

This Section Does Not Apply

DOCUMENTATION AUTHOR'S DECLARATION STATEMENT § 10-103

I certify that this Certificate of Compliance documentation is accurate and complete.

Documentation Author Name: Hans Marsman, CEA, CEPE, LEED AP BD+C	Documentation Author Signature:
Company: Brummitt Energy Associates, Inc	Signature Date:
Address: 777 South Highway 101, Suite 203	CEA Identification (if applicable): Senior Energy Analyst CABEC
City/State/Zip: Solana Beach / California / 92075	Phone: 619.531.1126

RESPONSIBLE PERSON'S DECLARATION STATEMENT

I certify the following under penalty of perjury, under the laws of the State of California: Professional Stamp (optional):

X	I hereby affirm that I am eligible under the provisions of Division 3 of the Business and Professions Code to sign this document as the person responsible for its preparation; and that I am licensed in the State of California as a civil engineer, mechanical engineer, electrical engineer, or I am a licensed architect.
☐	I affirm that I am eligible under the provisions of Division 3 of the Business and Professions Code by section 5537.2 or 6737.3 to sign this document as the person responsible for its preparation; and that I am a licensed contractor performing this work.
☐	I affirm that I am eligible under Division 3 of the Business and Professions Code to sign this document because it pertains to a structure or type of work described as exempt pursuant to Business and Professions Code Sections 5537, 5538 and 6737.1.

Building Owner's Name: - specify -	Building Owner's Signature:
Address: - specify -	Date Signed:
City/State/Zip: - specify - / - specify - / - specify -	Phone: - specify -
Responsible Architectural Designer Name: Randall P Cavannagh	Responsible Architectural Designer Signature: Randall Cavanagh
Company: American Modular Systems | Gen7 Schools	Date Signed: 05/26/15
Address: 787 Spreckels Avenue	License: C12631
City/State/Zip: Manteca / CA / 95336	Phone: 209.825.1921
Responsible Lighting Designer Name: Randall P Cavannagh	Responsible Lighting Designer Signature: Randall Cavanagh
Company: American Modular Systems | Gen7 Schools	Date Signed: 05/26/15
Address: 787 Spreckels Avenue	License: C12631
City/State/Zip: Manteca / CA / 95336	Phone: 209.825.1921
Responsible Mechanical Designer Name: Randall P Cavannagh	Responsible Mechanical Designer Signature: Randall Cavanagh
Company: American Modular Systems | Gen7 Schools	Date Signed: 05/26/15
Address: 787 Spreckels Avenue	License: C12631
City/State/Zip: Manteca / CA / 95336	Phone: 209.825.1921

NRCC-PRF-ENV-DETAILS -SECTION START-

A. OPAQUE SURFACE ASSEMBLY DETAILS

1.	2.	3.	4.	Confirmed	
Surface Name	Surface Type	Description of Assembly Layers	Notes	Pass	Fail
Concr. Slab over Crawlspace	ExteriorFloor	Air - Floor - 3 1/2 in. Concrete - 140 lb/ft3 - 4 in. Carpet - 3/4 in.		☐	☐
Roof: U 0.70 per EZFrame12	Roof	Metal Standing Seam - 1/16 in. Expanded Polystyrene - EPS - 1/2 in. R2.1 Metal framed roof, 24in. OC, 5.5in., R-19 Acoustic Tile - 3/8 in.		☐	☐
R-13 in 4 wood frame	ExteriorWall	Stucco - 7/8 in. Wood framed wall, 16in. OC, 3.5in., R-13 Gypsum Board - 1/2 in.		☐	☐

B. OVERHANG DETAILS (Adapted from NRCC-ENV-02-E)

1.	2.	3.		4.	Confirmed	
Fenestration Tag/ID	Fenestration Orientation	Overhang Dimensions: Horizontal Projection	Distance Above Window	Side fin: Vertical Projection	Pass	Fail
A - 10x8 Max (OH)15	West	4.0 ft.	2.0 ft.	Left: 0 ft., Right: 0 ft.	☐	☐
A - 10x8 Max (OH)16	West	3.0 ft.	2.0 ft.	Left: 0 ft., Right: 0 ft.	☐	☐
A - 10x8 Max (OH)20	East	4.0 ft.	2.0 ft.	Left: 0 ft., Right: 0 ft.	☐	☐
A - 10x8 Max (OH)21	East	4.0 ft.	2.0 ft.	Left: 0 ft., Right: 0 ft.	☐	☐
A - 10x8 Max (OH)29	West	4.0 ft.	2.0 ft.	Left: 0 ft., Right: 0 ft.	☐	☐
A - 10x8 Max (OH)30	West	3.0 ft.	2.0 ft.	Left: 0 ft., Right: 0 ft.	☐	☐
A - 10x8 Max (OH)33	East	4.0 ft.	2.0 ft.	Left: 0 ft., Right: 0 ft.	☐	☐
A - 10x8 Max (OH)34	East	4.0 ft.	2.0 ft.	Left: 0 ft., Right: 0 ft.	☐	☐
A - 10x8 Max (OH)41	West	4.0 ft.	2.0 ft.	Left: 0 ft., Right: 0 ft.	☐	☐
A - 10x8 Max (OH)42	West	3.0 ft.	2.0 ft.	Left: 0 ft., Right: 0 ft.	☐	☐
A - 10x8 Max (OH)45	East	4.0 ft.	2.0 ft.	Left: 0 ft., Right: 0 ft.	☐	☐
A - 10x8 Max (OH)46	East	4.0 ft.	2.0 ft.	Left: 0 ft., Right: 0 ft.	☐	☐

B. OVERHANG DETAILS (Adapted from NRCC-ENV-02-E)

1.	2.	3.		4.	Confirmed	
Fenestration Tag/ID	Fenestration Orientation	Overhang Dimensions: Horizontal Projection	Distance Above Window	Side fin: Vertical Projection	Pass	Fail
A - 10x8 Max (OH)53	West	4.0 ft.	2.0 ft.	Left: 0 ft., Right: 0 ft.	☐	☐
A - 10x8 Max (OH)54	West	3.0 ft.	2.0 ft.	Left: 0 ft., Right: 0 ft.	☐	☐
A - 10x8 Max (OH)57	East	4.0 ft.	2.0 ft.	Left: 0 ft., Right: 0 ft.	☐	☐
A - 10x8 Max (OH)58	East	4.0 ft.	2.0 ft.	Left: 0 ft., Right: 0 ft.	☐	☐
A - 10x8 Max (OH)65	West	4.0 ft.	2.0 ft.	Left: 0 ft., Right: 0 ft.	☐	☐
A - 10x8 Max (OH)66	West	3.0 ft.	2.0 ft.	Left: 0 ft., Right: 0 ft.	☐	☐
A - 10x8 Max (OH)69	East	4.0 ft.	2.0 ft.	Left: 0 ft., Right: 0 ft.	☐	☐
A - 10x8 Max (OH)70	East	4.0 ft.	2.0 ft.	Left: 0 ft., Right: 0 ft.	☐	☐

NRCC-PRF-MCH-DETAILS -SECTION START-

A. MECHANICAL VENTILATION AND REHEAT *(Adapted from 2013-NRCC-MCH-03-E)*

1. DESIGN AIR FLOWS; 2. VENTILATION (§ 120.1)

CONDITIONED ZONE NAME	HEATING / COOLING SYSTEM ID	DESIGN PRIMARY AIR FLOW (CFM)	DESIGN PRIMARY MINIMUM AIR FLOW (CFM)	MINIMUM PRIMARY AIR FLOW FRACTION	MAXIMUM HEATING AIR FLOW (CFM)	MAXIMUM HEATING AIR FLOW FRACTION	DDC CONTROL (Y/N)	VENT SYSTEM ID	CONDITIONED AREA (ft2)	MIN. VENT PER AREA (CFM/ft2)	DESIGN NUM. OF PEOPLE	MIN. VENT PER PERSON (CFM/person)	REQ'D VENT AIR FLOW (CFM)	DESIGN VENT AIR FLOW (CFM)	TRANSFER AIRFLOW (CFM)	DCV (Y/N)	Pass	Fail
1-30x32 Classroom	AC-13	2,000	500	0.25	NA	NA	N	AC-13	960	0.38	48	8	360	360	NA	N	☐	☐
2-30x32 Classroom	AC-123	2,000	500	0.25	NA	NA	N	AC-123	960	0.38	48	8	360	360	NA	N	☐	☐
3-30x32 Classroom	AC-135	2,000	500	0.25	NA	NA	N	AC-135	960	0.38	48	8	360	360	NA	N	☐	☐

A. MECHANICAL VENTILATION AND REHEAT *(Adapted from 2013-NRCC-MCH-03-E)*

1. DESIGN AIR FLOWS; 2. VENTILATION (§ 120.1)

CONDITIONED ZONE NAME	HEATING / COOLING SYSTEM ID	DESIGN PRIMARY AIR FLOW (CFM)	DESIGN PRIMARY MINIMUM AIR FLOW (CFM)	MINIMUM PRIMARY AIR FLOW FRACTION	MAXIMUM HEATING AIR FLOW (CFM)	MAXIMUM HEATING AIR FLOW FRACTION	DDC CONTROL (Y/N)	VENT SYSTEM ID	CONDITIONED AREA (ft2)	MIN. VENT PER AREA (CFM/ft2)	DESIGN NUM. OF PEOPLE	MIN. VENT PER PERSON (CFM/person)	REQ'D VENT AIR FLOW (CFM)	DESIGN VENT AIR FLOW (CFM)	TRANSFER AIRFLOW (CFM)	DCV (Y/N)	Pass	Fail
4-30x32 Classroom	AC-147	2,000	500	0.25	NA	NA	N	AC-147	960	0.38	48	8	360	360	NA	N	☐	☐
5-30x32 Classroom	AC-159	2,000	500	0.25	NA	NA	N	AC-159	960	0.38	48	8	360	360	NA	N	☐	☐
								TOTAL	4,800		240		1,800	1,800	NA		☐	☐

B. ZONAL SYSTEM AND TERMINAL UNIT SUMMARY § 140.4

1. System ID	2. System Type	3. Qty	4. Rated Capacity (kBtuh): Heating	Cooling	5. Economizer	6. Zone Name	7. Airflow (cfm): Design	Min.	Min. Ratio	8. Fan: BHP	Cycles	ECM Motor	Pass	Fail
30x32 Classroom5-TRM	VAVNoReheatBox	1	NA	NA	NA	1-30x32 Classroom	2000	500	0.25	NA	NA	☐	☐	☐
30x32 Classroom24-TRM	VAVNoReheatBox	1	NA	NA	NA	2-30x32 Classroom	2000	500	0.25	NA	NA	☐	☐	☐
30x32 Classroom36-TRM	VAVNoReheatBox	1	NA	NA	NA	3-30x32 Classroom	2000	500	0.25	NA	NA	☐	☐	☐
30x32 Classroom48-TRM	VAVNoReheatBox	1	NA	NA	NA	4-30x32 Classroom	2000	500	0.25	NA	NA	☐	☐	☐
30x32 Classroom60-TRM	VAVNoReheatBox	1	NA	NA	NA	5-30x32 Classroom	2000	500	0.25	NA	NA	☐	☐	☐

C. EXHAUST FAN SUMMARY

This Section Does Not Apply

D. DHW EQUIPMENT SUMMARY – *(Adapted from NRCC-PLB-01)* § 110.3

1. DHW Name	2. Fuel	3. Type	4. Qty	5. Distribution Type	6. Rated Input kBtuh	7. Efficiency	8. Pilot Energy (Btu/h)	9. External Tank Insulation	10. Vol	11. Standby Loss	12. Vol. of Suppl. Storage Tank	Pass	Fail
Rheem 82VP30-12	Electricity	Storage	1	Nonrecirculating	15	EF: 0.930	0	NA	30	0	NA	☐	☐

E. MULTI-FAMILY CENTRAL DHW SYSTEM DETAILS

This Section Does Not Apply

F. SOLAR HOT WATER HEATING SUMMARY (Adapted from NRCC-STH-01)

This Section Does Not Apply

G. MECHANICAL HVAC ACCEPTANCE TESTS & FORMS *(Adapted from 2013-NRCC-MCH-01-E)* § RA4

Declaration of Required Acceptance Certificates (NRCA) – Acceptance Certificates that may be submitted. (Retain copies and verify forms are completed and signed to post in field for Field Inspector to verify).

Test Description		MCH-02A	MCH-03A	MCH-04A	MCH-05A	MCH-06A	MCH-07A	MCH-08A	MCH-09A	MCH-10A	MCH-11A	MCH-12A	MCH-13A	MCH-14A	MCH-15A	MCH-16A	MCH-17A	MCH-18A	Confirmed	
Equipment Requiring Testing or Verification	# of units	Outdoor Air	Single Zone Unitary	Air Dist. Ducts	Economizer Controls	DCV	Supply Fan VAV	Valve leakage	Supply Water Temp. Reset	Hyd. Variable Flow Control	Auto Demand Shed Control	FDD for DX Units	Auto FDD for Air & Zone	Dist. Energy Storage DX AC	TES Systems	Supply Air Temp. Reset	Condenser Water Reset Controls	ECMS	Pass	Fail
DHW1 - SHW	1	–	–	–	–	–	–	–	–	–	–	–	–	–	–	–	–	–	☐	☐
AC-13	1	X	–	–	–	–	X	–	–	–	X	–	–	–	–	X	–	–	☐	☐

G. MECHANICAL HVAC ACCEPTANCE TESTS & FORMS *(Adapted from 2013-NRCC-MCH-01-E)* § RA4

Declaration of Required Acceptance Certificates (NRCA) – Acceptance Certificates that may be submitted. (Retain copies and verify forms are completed and signed to post in field for Field Inspector to verify).

Test Description		MCH-02A	MCH-03A	MCH-04A	MCH-05A	MCH-06A	MCH-07A	MCH-08A	MCH-09A	MCH-10A	MCH-11A	MCH-12A	MCH-13A	MCH-14A	MCH-15A	MCH-16A	MCH-17A	MCH-18A	Confirmed	
Equipment Requiring Testing or Verification	# of units	Outdoor Air	Single Zone Unitary	Air Dist. Ducts	Economizer Controls	DCV	Supply Fan VAV	Valve leakage	Supply Water Temp. Reset	Hyd. Variable Flow Control	Auto Demand Shed Control	FDD for DX Units	Auto FDD for Air & Zone	Dist. Energy Storage DX AC	TES Systems	Supply Air Temp. Reset	Condenser Water Reset Controls	ECMS	Pass	Fail
AC-123	1	X	–	–	–	–	X	–	–	–	X	–	–	–	–	X	–	–	☐	☐
AC-135	1	X	–	–	–	–	X	–	–	–	X	–	–	–	–	X	–	–	☐	☐
AC-147	1	X	–	–	–	–	X	–	–	–	X	–	–	–	–	X	–	–	☐	☐
AC-159	1	X	–	–	–	–	X	–	–	–	X	–	–	–	–	X	–	–	☐	☐

NRCC-PRF-LTI-DETAILS -SECTION START-

A. INDOOR CONDITIONED LIGHTING CONTROL CREDITS (Adapted from NRCC-LTI-02-E) § 140.6

Lighting Control Credits Schedule (includes all lighting controls installed in conditioned space for compliance credit per §140.6(a)2 and Table 140.6-A); Control Credit Calculation

Location in Building	Occupancy Type (must meet requirements of Table 140.6-A)	Type/Description of Lighting Control (i.e., partial on occupancy sensor, manual dimming, etc.)	# of Units	Watts of Controlled Lighting	Power Adjustment Factor	Control Credit Watts	√ If Acceptance Test Required	Pass	Fail
S-1-30x32 Classroom	Classrooms, Lecture, Training, Vocational Areas	- none specified -	1	540	0.00	0		☐	☐
S-2-30x32 Classroom	Classrooms, Lecture, Training, Vocational Areas	- none specified -	1	540	0.00	0		☐	☐
S-3-30x32 Classroom	Classrooms, Lecture, Training, Vocational Areas	- none specified -	1	540	0.00	0		☐	☐

A. INDOOR CONDITIONED LIGHTING CONTROL CREDITS (Adapted from NRCC-LTI-02-E) § 140.6

Lighting Control Credits Schedule (includes all lighting controls installed in conditioned space for compliance credit per §140.6(a)2 and Table 140.6-A); Control Credit Calculation

Location in Building	Occupancy Type (must meet requirements of Table 140.6-A)	Type/Description of Lighting Control (i.e., partial on occupancy sensor, manual dimming, etc.)	# of Units	Watts of Controlled Lighting	Power Adjustment Factor	Control Credit Watts	√ If Acceptance Test Required	Pass	Fail
S-4-30x32 Classroom	Classrooms, Lecture, Training, Vocational Areas	- none specified -	1	540	0.00	0		☐	☐
S-5-30x32 Classroom	Classrooms, Lecture, Training, Vocational Areas	- none specified -	1	540	0.00	0		☐	☐

B. INDOOR CONDITIONED LIGHTING MANDATORY LIGHTING CONTROLS (Adapted from NRCC-LTI-02-E) § 130.1

This Section Does Not Apply

§130.1(a) • Manual area controls; §130.0(b) • Multi Level; §130.1(c) • Auto Shut-Off; §130.1(d) • Mandatory Daylight; §130.1(e) • Demand Responsive

C. TAILORED METHOD LIGHTING POWER ALLOWANCE SUMMARY AND CHECKLIST (Adapted from NRCC-LTI-04-E) § 140.6

General lighting power (see Table D)	0
General lighting power from special function areas (see Table E)	NA
Additional "use it or lose it" (See Table G)	0
Total watts	0

D. GENERAL LIGHTING POWER (Adapted from NRCC-LTI-04-E) § 140.6-D

This Section Does Not Apply

E. GENERAL LIGHTING FROM SPECIAL FUNCTION AREAS (Adapted from NRCC-LTI-04-E) § 140.6(c) 3H

Room Number	Primary Function Area	Illuminance Value (LUX)	Room Cavity Ratio (Table G)	Allowed LPD	Floor Area (ft²)	Allowed Watts	Pass	Fail
NA	NA	NA	NA	NA	NA	NA	☐	☐

Note: Tailored Method for Special Function Areas is not currently implemented

F. ROOM CAVITY RATIO (Adapted from NRCC-LTI-04-E)

Rectangular Spaces

Room Number	Task/Activity Description	Room Length (ft)	Room Width (ft)	Room Cavity Height (ft)	RCR	Pass	Fail
NA	NA	NA	NA	NA	NA	☐	☐

Non-Rectangular Spaces

This Section Does Not Apply

Note: All applicable spaces are listed under the Non-Rectangular Spaces table

G. ADDITIONAL "USE IT OR LOSE IT" (Adapted from NRCC-LTI-04-E)

1. Wall Display	2. Combined Floor Display and Task Lighting	3. Combined Ornamental and Special Effects Lighting	4. Very Valuable Merchandise	Allowed Watts	Pass	Fail
0	0	0	0	0	☐	☐

5. Wall Display

This Section Does Not Apply

6. Floor Display and Task Lighting

This Section Does Not Apply

7. Combined Ornamental and Special Effects Lighting

This Section Does Not Apply

8. Very Valuable Merchandise

This Section Does Not Apply

H. INDOOR & OUTDOOR LIGHTING ACCEPTANCE TESTS & FORMS (Adapted from NRCC-LTI-01-E and NRCC-LTO-01-E) § 130.4

Declaration of Required Acceptance Certificates (NRCA) –Acceptance Certificates that must be verified in the field. (Retain copies and verify forms are completed and signed to post in field for Field Inspector to verify).

Test Description		Indoor: NRCA-LTI-02-A	Indoor: NRCA-LTI-03-A	Indoor: NRCA-LTI-04-A	Outdoor: NRCA-LTO-02-A	Confirmed	
Equipment Requiring Testing or Verification	# of units	Occ Sensors / Auto Time Switch	Auto Daylight	Demand Responsive	Outdoor Controls	Pass	Fail
Occupant Sensors	0	☐	☐	☐	☐	☐	☐
Automatic Time Switch	0	☐	☐	☐	☐	☐	☐
Automatic Daylighting	0	☐	☐	☐	☐	☐	☐
Demand Responsive	0	☐	☐	☐	☐	☐	☐
Outdoor Controls	0	☐	☐	☐	☐	☐	☐

APPROVED
DIVISION OF STATE ARCHITECT
HIGH PERFORMANCE SECTION
APP.# 02-113921 DATE: 6/10/15
Lydia Baron C.S.PE.

American Modular Systems
787 Spreckels Ave.Manteca, CA 95336
Phone (209) 825-1921 - Fax (209) 825-7018
americanmodular.com

MODULAR MANUFACTURER PROPRIETARY STATEMENT

THESE DRAWINGS AND THE MATERIAL CONTAINED THEREIN ARE THE PROPERTY OF AMERICAN MODULAR SYSTEMS, INC. (AMS) AND SHALL NOT BE REPRODUCED, COPIED OR OTHERWISE DISPOSED OF DIRECTLY OR INDIRECTLY AND SHALL NOT BE USED IN WHOLE OR IN PART TO ASSIST IN THE MAKING OF OR FOR THE PURPOSE OF FURNISHING ANY INFORMATION FOR THE MAKING OF DRAWINGS, PRINTS, APPARATUS OR PARTS THEREOF WITHOUT THE FULL KNOWLEDGE AND WRITTEN CONSENT OF AMS. ALL PATENTABLE MATERIAL CONTAINED HEREIN AND ORIGINATING WITH AMS SHALL BE THE SOLE PROPERTY OF AMS.

PRE-CHECKED SET NAME

30' x 32' THRU 150' x 32' BUILDINGS

SITE SPECIFIC PROJECT NAME

SHEET TITLE

ENERGY CALCULATIONS

MANUFACTURER PROFESSIONAL OF RECORD ON PC

LICENSED ARCHITECT
RANDALL PATRICK CAVANAGH
No. C12631
Ren. 03-31-17
STATE OF CALIFORNIA

PROJECT SPECIFIC STATE AGENCY APPROVAL

IDENTIFICATION STAMP
DIV. OF THE STATE ARCHITECT
02 116495
AC – FLS SS
DATE 12-18-2017

ORIGINAL PC STATE AGENCY APPROVAL

IDENTIFICATION STAMP
DIV. OF THE STATE ARCHITECT
CA. DEPT. OF GENERAL SERVICES
PC 02-113921
AC ✓ FLS ✓ SS
DATE 6/19/2015

PRE-CHECK (PC) DOCUMENT – CODE: 2013 CBC
A SEPARATE PROJECT APPLICATION FOR CONSTRUCTION IS REQUIRED

REVISIONS

1
2
3
4

DRAWN BY:
SCALE: AS NOTED
DATE:

SHEET NUMBER

EN.4

02-113921 - 30'x32' - 150'x32' EXPOSED STEEL

STATE OF CALIFORNIA
INDOOR LIGHTING
CEC-NRCC-LTI-01-E (Revised 06/14) CALIFORNIA ENERGY COMMISSION

CERTIFICATE OF COMPLIANCE – USER INSTRUCTIONS	NRCC-LTI-01-E
Indoor Lighting	(Page 1 of 5)
Project Name: AMS Modular Classroom 30'x32' RR' (for DSA)	Date Prepared: 5/26/2015

Climate Zone: 15	Conditioned Floor Area: 0 / Unconditioned Floor Area: 320		
General Information			
Building Type: ☐ Schools	☐ Nonresidential / ☐ Relocatable Public Schools	☐ High-Rise Residential / ☐ Conditioned Spaces	☐ Hotel/Motel / ☒ Unconditioned Spaces
Phase of Construction:	☒ New Construction	☐ Addition	☐ Alteration
Method of Compliance:	☐ Complete Building	☒ Area Category	☐ Tailored

LIGHTING COMPLIANCE DOCUMENTS (select yes for each document included)

For detailed instructions on the use of this and all Energy Efficiency Standards compliance documents, refer to the Nonresidential Manual published by the California Energy Commission.

YES	NO	FORM	TITLE
YES		NRCC-LIT-01-E	Certificate of Compliance. All Pages required on plans for all submittals.
YES		NRCC-LIT-02-E	Lighting Controls, Certificate of Compliance, and PAF Calculation. All Pages required on plans for all submittals.
YES		NRCC-LIT-03-E	Indoor Lighting Power Allowance
	NO	NRCC-LIT-04-E	Tailored Method Worksheets
	NO	NRCC-LIT-05-E	Line Voltage Track Lighting Worksheets

Summary of Allowed Lighting Power

Conditioned and Unconditioned space Lighting must not be combined for compliance

	Indoor Lighting Power for Conditioned Spaces		Watts	Indoor Lighting Power for Unconditioned Spaces		Watts
1.	Installed Lighting NRCC-LTI-01-E, page 4	+	0	Installed Lighting NRCC-LTI-01-E, page 4	+	160
2.	PORTABLE ONLY FOR OFFICES NRCC-LTI-01-E, page 3	+				
3.	Minus Lighting Control Credits NRCC-LTI-02-E, page 2	-	0	Minus Lighting Control Credits NRCC-LTI-02-E, page 2	-	0
4.	Adjusted Installed Lighting Power (row 1 plus row 2 minus row 3)	=	0	Adjusted Installed Lighting Power (row 1 minus row 3)	=	160

STATE OF CALIFORNIA
INDOOR LIGHTING
CEC-NRCC-LTI-01-E (Revised 06/14) CALIFORNIA ENERGY COMMISSION

CERTIFICATE OF COMPLIANCE – USER INSTRUCTIONS	NRCC-LTI-01-E
Indoor Lighting	(Page 2 of 5)
Project Name: AMS Modular Classroom 30'x32' RR' (for DSA)	Date Prepared: 5/26/2015

5.	Complies ONLY if Installed ≤ Allowed ↕		Complies ONLY if Installed ≤ Allowed	↕
6.	Allowed Lighting Power Conditioned NRCC-LTI-03-E, page 1	0	Allowed Lighting Power Unconditioned NRCC-LTI-03-E, page 1	192

Declaration of Required Installation Certificates – Declare by selecting yes for all Installation Certificates that will be submitted. (Retain copies and verify forms are completed and signed.)

YES	NO	Form/Title	
✓		NRCI-LTI-01-E - Must be submitted for all buildings	☐ Field Inspector
	✓	NRCI-LTI-02-E - Must be submitted for a lighting control system, or for an Energy Management Control System (EMCS), to be recognized for compliance.	☐ Field Inspector
	✓	NRCI-LTI-03-E - Must be submitted for a line-voltage track lighting integral current limiter, or for a supplementary overcurrent protection panel used to energize only line-voltage track lighting, to be recognized for compliance.	☐ Field Inspector
	✓	NRCI-LTI-04-E - Must be submitted for two interlocked systems serving an auditorium, a convention center, a conference room, a multipurpose room, or a theater to be recognized for compliance.	☐ Field Inspector
	✓	NRCI-LTI-05-E - Must be submitted for a Power Adjustment Factor (PAF) to be recognized for compliance.	☐ Field Inspector
	✓	NRCI-LTI-06-E - Must be submitted for additional wattage installed in a video conferencing studio to be recognized for compliance.	☐ Field Inspector

Declaration of Required Certificates of Acceptance – Declare by checking all of the Certificates of Acceptance that will be submitted. (Retain copies and verify forms are completed and signed.)

YES	NO	Form/Title	
	✓	NRCA-LTI-02-A - Must be submitted for occupancy sensors and automatic time switch controls.	☐ Field Inspector
	✓	NRCA-LTI-03-A - Must be submitted for automatic daylight controls.	☐ Field Inspector
	✓	NRCA-LTI-04-A - Must be submitted for demand responsive lighting controls.	☐ Field Inspector

STATE OF CALIFORNIA
INDOOR LIGHTING
CEC-NRCC-LTI-01-E (Revised 06/14) CALIFORNIA ENERGY COMMISSION

CERTIFICATE OF COMPLIANCE – USER INSTRUCTIONS	NRCC-LTI-01-E
Indoor Lighting	(Page 3 of 5)
Project Name: AMS Modular Classroom 30'x32' RR' (for DSA)	Date Prepared: 5/26/2015

A separate Lighting Schedule Must Be Filled Out for Conditioned and Unconditioned Spaces. Installed Lighting Power listed on this Lighting Schedule is only for:
☐ CONDITIONED SPACE ☒ UNCONDITIONED SPACE

A. INDOOR LIGHTING SCHEDULE and FIELD INSPECTION ENERGY CHECKLIST
- ☐ The actual indoor lighting power listed on this page and on the next page includes all installed permanent and planned portable lighting systems.
- ☐ When Complete Building Method is used for compliance, list each different type of luminaire on separate lines.
- ☐ When Area Category Method or Tailored Method is used for compliance, list each different type of luminaire by each different function area on separate lines
- ☐ Also include track lighting in schedule, and submit the track lighting compliance form (NRCC-LTI-05-E) when line-voltage track lighting is installed.

B. Installed Portable Luminaires in Offices – Exception to Section 140.6(a)
- ☐ This section shall be filled out ONLY for portable luminaires in offices (As defined in §100.1). All other planned portable luminaires shall be documented on next page of this compliance form.
- ☐ This section is used to determine if greater than 0.3 watts of portable lighting is planned for any office
- ☐ Fill out a separate line for each different office. Small offices that are typical (having the same general and portable lighting) may be grouped together. This allowance shall not be traded between offices having different lighting systems.

Office Portable Luminaire Schedule	Office Installed Portable Luminaire Watts Per Square Foot						Accountable Watts	Office Location	Field Inspector	
A	B	C	D	E	F	G	H	I	J	
Complete Luminaire Description (i.e., LED, under cabinet, furniture mounted direct/indirect)	Watts per Luminaire	Number of Luminaires	Installed portable luminaire watts in this office (B x C)	Square feet of this office	Watts per square foot (D / E)	If F ≤ 0.3, enter zero; If F > 0.3, (F-0.3)	E x G	Identify Office area in which these portable luminaires are installed	Pass	Fail
									☐	☐
									☐	☐
									☐	☐
									☐	☐
Total installed portable luminaire watts that are greater than 0.3 watts per square foot per office:								Enter sum total of all pages into NRCC-LTI-01-E; Page 1		

STATE OF CALIFORNIA
INDOOR LIGHTING
CEC-NRCC-LTI-01-E (Revised 06/14) CALIFORNIA ENERGY COMMISSION

CERTIFICATE OF COMPLIANCE – USER INSTRUCTIONS	NRCC-LTI-01-E
Indoor Lighting	(Page 4 of 5)
Project Name: AMS Modular Classroom 30'x32' RR' (for DSA)	Date Prepared: 5/26/2015

A separate Lighting Schedule Must Be Filled Out for Conditioned and Unconditioned Spaces. Installed Lighting Power listed on this Lighting Schedule is only for:
☐ CONDITIONED SPACE ☒ UNCONDITIONED SPACE

C. INDOOR LIGHTING SCHEDULE and FIELD INSPECTION ENERGY CHECKLIST

Luminaire Schedule		Installed Watts					Location	Field Inspector [1]	
A	B	C	D (How wattage was determined)		E	F	G	H	
Name or Item Tag	Complete Luminaire Description (i.e. 3 lamp fluorescent troffer, F32T8, one dimmable electronic ballast)	Watts per Luminaire	CEC Default from NA8	According to §130.0(c)	Number Luminaires	Total Installed Watts in this area (C x E)	Primary Function area in which these luminaires are installed	Pass	Fail
LED	A - 40w LED	40.0	☒	☐	4	160	Corridor/Restroom/Support	☐	☐
			☐	☐				☐	☐
			☐	☐				☐	☐
			☐	☐				☐	☐
			☐	☐				☐	☐
			☐	☐				☐	☐
			☐	☐				☐	☐
			☐	☐				☐	☐
			☐	☐				☐	☐
INSTALLED WATTS PAGE TOTAL:						160	Enter sum total of all pages into NRCC-LTI-01-E; Page 2		

STATE OF CALIFORNIA
INDOOR LIGHTING
CEC-NRCC-LTI-01-E (Revised 06/14) CALIFORNIA ENERGY COMMISSION

CERTIFICATE OF COMPLIANCE – USER INSTRUCTIONS	NRCC-LTI-01-E
Indoor Lighting	(Page 5 of 5)
Project Name: AMS Modular Classroom 30'x32' RR' (for DSA)	Date Prepared: 5/26/2015

DOCUMENTATION AUTHOR'S DECLARATION STATEMENT

1. I certify that this Certificate of Compliance documentation is accurate and complete.

Documentation Author Name:	Hans Marsman, CEA, CEPE, LEED AP BD+C	Documentation Author Signature:	H Marsman
Company:	Brummitt Energy Associates, Inc	Signature Date:	5/26/2015
Address:	777 South Highway 101, Suite 203	CEA/ HERS Certification Identification (if applicable):	Senior Energy Analyst (CABEC)
City/State/Zip:	Solana Beach, California 92075	Phone:	619.531.1126

RESPONSIBLE PERSON'S DECLARATION STATEMENT

I certify the following under penalty of perjury, under the laws of the State of California:
1. The information provided on this Certificate of Compliance is true and correct.
2. I am eligible under Division 3 of the Business and Professions Code to accept responsibility for the building design or system design identified on this Certificate of Compliance (responsible designer).
3. The energy features and performance specifications, materials, components, and manufactured devices for the building design or system design identified on this Certificate of Compliance conform to the requirements of Title 24, Part 1 and Part 6 of the California Code of Regulations.
4. The building design features or system design features identified on this Certificate of Compliance are consistent with the information provided on other applicable compliance documents, worksheets, calculations, plans and specifications submitted to the enforcement agency for approval with this building permit application.
5. I will ensure that a completed signed copy of this Certificate of Compliance shall be made available with the building permit(s) issued for the building, and made available to the enforcement agency for all applicable inspections. I understand that a completed signed copy of this Certificate of Compliance is required to be included with the documentation the builder provides to the building owner at occupancy.

Responsible Designer Name:	Randall P Cavannagh	Responsible Designer Signature:	[signature]
Company:	American Modular Systems | Gen7 Schools	Date Signed:	05/26/15
Address:	787 Spreckels Avenue	License:	C12631
City/State/Zip:	Manteca, CA 95336	Phone:	209.825.1921

STATE OF CALIFORNIA
INDOOR LIGHTING – LIGHTING CONTROLS
CEC-NRCC-LTI-02-E (Revised 06/14) CALIFORNIA ENERGY COMMISSION

CERTIFICATE OF COMPLIANCE	NRCC-LTI-02-E
Indoor Lighting - Lighting Controls	(Page 1 of 3)
Project Name: AMS Modular Classroom 30'x32' RR' (for DSA)	Date Prepared: 5/26/2015

The NRCC-LTI-02-E shall be used to document all mandatory and prescriptive lighting controls that are applicable to the project.

Mandatory Lighting Control Declaration Statements (Indicate if the measure applies by checking yes or no below.)

YES	NO	Control Requirements
	✓	Lighting shall be controlled by self-contained lighting control devices which are certified to the Energy Commission according to the Title 20 Appliance Efficiency Regulations in accordance with Section 110.9.
	✓	Lighting shall be controlled by a lighting control a system or energy management control system in accordance with §110.9. An Installation Certificate shall be submitted in accordance with Section 130.4(b).
	✓	One or more Track Lighting Integral Current Limiters shall be installed which have been certified to the Energy Commission in accordance with §110.9 and §130.0. Additionally, an Installation Certificate shall be submitted in accordance with Section 130.4(b).
	✓	A Track Lighting Supplementary Overcurrent Protection Panel shall be installed in accordance with Section 110.9 and Section 130.0. Additionally, an Installation Certificate shall be installed in accordance with Section 130.4(b).
✓		All lighting controls and equipment shall comply with the applicable requirements in §110.9 and shall be installed in accordance with the manufacturer's instructions in accordance with Section 130.1.
	✓	All luminaires shall be functionally controlled with manually switched ON and OFF lighting controls in accordance with Section 130.1(a).
✓		General lighting shall be separately controlled from all other lighting systems in an area. Floor and wall display, window display, case display, ornamental, and special effects lighting shall each be separately controlled on circuits that are 20 amps or less. When track lighting is used, general, display, ornamental, and special effects lighting shall each be separately controlled; in accordance with Section 130.1(a)4.
		The general lighting of any enclosed area 100 square feet or larger, with a connected lighting load that exceeds 0.5 watts per square foot shall meet the multi-level lighting control requirements in accordance with Section 130.1(b).
✓		All installed indoor lighting shall be equipped with controls that meet the applicable Shut-OFF control requirements in Section 130.1(c).
		Lighting in all Daylit Zones shall be controlled in accordance with the requirements in Section 130.1(d) and daylit zones are shown on the plans.
	✓	Lighting power in buildings larger than 10,000 square feet shall be capable of being automatically reduced in response to a Demand Responsive Signal in accordance with Section 130.1(e).
✓		Before an occupancy permit is granted for a newly constructed building or area, or a new lighting system serving a building, area, or site is operated for normal use, indoor lighting controls serving the building, area, or site shall be certified as meeting the Acceptance Requirements for Code Compliance in accordance with Section 130.4.(a). The controls required to meet the Acceptance Requirements include automatic daylight controls, automatic shut-OFF controls, and demand responsive controls.

STATE OF CALIFORNIA
INDOOR LIGHTING – LIGHTING CONTROLS
CEC-NRCC-LTI-02-E (Revised 06/14) CALIFORNIA ENERGY COMMISSION

CERTIFICATE OF COMPLIANCE	NRCC-LTI-02-E
Indoor Lighting - Lighting Controls	(Page 2 of 3)
Project Name: AMS Modular Classroom 30'x32' RR' (for DSA)	Date Prepared: 5/26/2015

A separate document must be filled out for Conditioned and Unconditioned Spaces. This page is used only for the following:
☐ CONDITIONED SPACES ☒ UNCONDITIONED SPACES

MANDATORY AND PRESCRIPTIVE INDOOR LIGHTING CONTROL SCHEDULE, PAF CALCULATION, and FIELD INSPECTION CHECKLIST

Lighting Control Schedule			Standards Complying With [1] (✓ all that apply, or enter 'E' if Exempted)							PAF Credit Calculation [2]			✓ If Acceptance Test Required	Field Inspector	
A	B	C	D	E	F	G	H	I	J	K	L	M	N	O	
Location in Building	Type/ Description of Lighting Control (i.e.: occupancy sensor, automatic time switch, dimmer, automatic daylight, etc...)	# of Units	§130.1(a)	§130.0(b)	§130.1(c)	§130.1(d)	§130.1(e)	§140.6(a)2	§140.6(d)	Watts of Controlled Lighting	PAF	Control Credit (K x L)		Pass	Fail
Restrooms (per RR)	Switches	1	✓	E		E	E	N/A						☐	☐
	Occupancy Sensors	1			✓			N/A						☐	☐
														☐	☐
														☐	☐
														☐	☐
														☐	☐
														☐	☐
Control Credit PAGE TOTAL (Sum of Column M):												0			
IF MULTIPLE PAGES ARE USED, ENTER SUM TOTAL OF Control Credit for all pages HERE (Sum of all Column M):												0			
												Enter Control Credit total into NRCC-LTI-01-E; Page 1.			

1. §130.1(a) = Manual area controls; §130.0(b) = Multi Level; §130.1(c) = Auto Shut-Off; §130.1(d) = Mandatory Daylight; §130.1(e) = Demand Responsive; §140.6(d) = Additional lighting controls installed to earn a PAF; §140.6(d) = Prescriptive Secondary Sidelit Daylight Controls.
2. Check Table 140.6-A for correct Factor. PAFs shall not be traded between conditioned and unconditioned spaces. As a condition to earn a PAF, an Installation Certificate is also required to be filled out, signed, and submitted.

STATE OF CALIFORNIA
INDOOR LIGHTING – LIGHTING CONTROLS
CEC-NRCC-LTI-02-E (Revised 06/14) CALIFORNIA ENERGY COMMISSION

CERTIFICATE OF COMPLIANCE	NRCC-LTI-02-E
Indoor Lighting - Lighting Controls	(Page 3 of 3)
Project Name: AMS Modular Classroom 30'x32' RR' (for DSA)	Date Prepared: 5/26/2015

DOCUMENTATION AUTHOR'S DECLARATION STATEMENT

1. I certify that this Certificate of Compliance documentation is accurate and complete.

Documentation Author Name:	Hans Marsman, CEA, CEPE, LEED AP BD+C	Documentation Author Signature:	H Marsman
Company:	Brummitt Energy Associates, Inc	Signature Date:	5/26/2015
Address:	777 South Highway 101, Suite 203	CEA/ HERS Certification Identification (if applicable):	Senior Energy Analyst (CABEC)
City/State/Zip:	Solana Beach, California 92075	Phone:	619.531.1126

RESPONSIBLE PERSON'S DECLARATION STATEMENT

I certify the following under penalty of perjury, under the laws of the State of California:
1. The information provided on this Certificate of Compliance is true and correct.
2. I am eligible under Division 3 of the Business and Professions Code to accept responsibility for the building design or system design identified on this Certificate of Compliance (responsible designer).
3. The energy features and performance specifications, materials, components, and manufactured devices for the building design or system design identified on this Certificate of Compliance conform to the requirements of Title 24, Part 1 and Part 6 of the California Code of Regulations.
4. The building design features or system design features identified on this Certificate of Compliance are consistent with the information provided on other applicable compliance documents, worksheets, calculations, plans and specifications submitted to the enforcement agency for approval with this building permit application.
5. I will ensure that a completed signed copy of this Certificate of Compliance shall be made available with the building permit(s) issued for the building, and made available to the enforcement agency for all applicable inspections. I understand that a completed signed copy of this Certificate of Compliance is required to be included with the documentation the builder provides to the building owner at occupancy.

Responsible Designer Name:	Randall P Cavannagh	Responsible Designer Signature:	[signature]
Company:	American Modular Systems | Gen7 Schools	Date Signed:	05/26/15
Address:	787 Spreckels Avenue	License:	C12631
City/State/Zip:	Manteca, CA 95336	Phone:	209.825.1921

STATE OF CALIFORNIA
INDOOR LIGHTING POWER ALLOWANCE
CEC-NRCC-LTI-03-E (Revised 06/14) CALIFORNIA ENERGY COMMISSION

CERTIFICATE OF COMPLIANCE	NRCC-LTI-03-E
Certificate of Compliance - Indoor Lighting Power Allowance	(Page 1 of 4)
Project Name: AMS Modular Classroom 30'x32' RR' (for DSA)	Date Prepared: 5/26/2015

ALLOWED LIGHTING POWER

A separate page must be filled out for Conditioned and Unconditioned Spaces. This page is only for:
☐ CONDITIONED spaces ☒ UNCONDITIONED spaces

A. SUMMARY TOTALS OF LIGHTING POWER ALLOWANCES
- ☐ If using Complete Building Method for compliance, use only the total in column (a) as total allowed building watts.
- ☐ If using Area Category Method, Tailored Method, or a combination of Area Category and Tailored Method for compliance, use only the total in column (b) as the total allowed building watts

	(a)	(b)
1. Complete Building Method Allowed Watts. Documented in section B of NRCC-LTI-03-E (below on this page)		
2. Area Category Method Allowed Watts. Documented in section C-1 of NRCC-LTI-03-E (below on this page)		192
3. Tailored Method Allowed Watts. Documented in section A of NRCC-LTI-04-E		0
TOTAL ALLOWED BUILDING WATTS. Enter number into correct cell on NRCC-LTI-01, Page 2, Row 1		192

☐ Check here if building contains both conditioned and unconditioned areas.

B. COMPLETE BUILDING METHOD LIGHTING POWER ALLOWANCE

A	B		C		D
TYPE OF BUILDING (From §140.6 Table 140.6-B)	WATTS PER (ft²)	X	COMPLETE BLDG. AREA	=	ALLOWED WATTS
Total Area:					
Total Watts. Enter Total Watts into section A, row 1 (Above on this page)					

C-1 AREA CATEGORY METHOD TOTAL LIGHTING POWER ALLOWANCES (C-2 plus C-3)	Watts
Total from section C-2	192
Total from section C-3	0
Total Watts. Enter Total Watts into section A, row 2 (Above on this page)	192

STATE OF CALIFORNIA
INDOOR LIGHTING POWER ALLOWANCE
CEC-NRCC-LTI-03-E (Revised 06/14) CALIFORNIA ENERGY COMMISSION

CERTIFICATE OF COMPLIANCE	NRCC-LTI-03-E
Certificate of Compliance - Indoor Lighting Power Allowance	(Page 2 of 4)
Project Name: AMS Modular Classroom 30'x32' RR' (for DSA)	Date Prepared: 5/26/2015

A separate page must be filled out for Conditioned and Unconditioned Spaces. This page is only for:
☐ CONDITIONED spaces ☒ UNCONDITIONED spaces

C -2 AREA CATEGORY METHOD GENERAL LIGHTING POWER ALLOWANCE
- ☐ Do not include portable lighting for offices. Portable lighting for offices shall be documented only in section B of NRCC-LTI-01-E.
- ☐ Separately list lighting for each primary function area as defined in §100.1 of the Standards.

A		B		C		D
AREA CATEGORY (From §140.6 Table 140.6-C)		WATTS				ALLOWED
Location in Building	Primary Function Area per Table 140.6-C	PER (ft²)	X	AREA (ft²)	=	WATTS
RR	Corridor/Restroom/Support	0.60		320		192
			TOTALS	320		
Enter sum total Area Category allowed watts into section C-1 of NRCC-LTI-03-E (this compliance form)						192
						WATTS

STATE OF CALIFORNIA
INDOOR LIGHTING POWER ALLOWANCE
CEC-NRCC-LTI-03-E (Revised 06/14) CALIFORNIA ENERGY COMMISSION

CERTIFICATE OF COMPLIANCE	NRCC-LTI-03-E
Certificate of Compliance - Indoor Lighting Power Allowance	(Page 3 of 4)
Project Name: AMS Modular Classroom 30'x32' RR' (for DSA)	Date Prepared: 5/26/2015

A separate page must be filled out for Conditioned and Unconditioned Spaces. This page is only for:
☐ CONDITIONED spaces ☒ UNCONDITIONED spaces

C-3 AREA CATEGORY METHOD Additional Lighting Wattage Allowance (from Table 140.6-C Footnotes)

A	B	C [2]	D	E	F	G
Primary Function	Sq Ft or linear ft [1]	Additional Watts Allowed	Wattage Allowance (B x C)	Description(s) and Quantity of Special Luminaire Types in each Primary Function Area	Total Design Watts [3]	ALLOWED WATTS Smaller of D or F
TOTALS – Enter into TOTAL AREA CATEGORY METHOD ADDITIONAL ALLOWANCES – Section C-1						0

1. Use linear feet only for additional allowance for white board or chalk board. All other additional Area Category allowances shall use watts per square foot.
2. Additional watts are available only when allowed according to the footnotes on bottom of Table 146-C, which include: Specialized task work; Ornamental lighting; Precision commercial and industrial work; Per linear foot of white board or chalk board; Accent, display and feature lighting; and Videoconferencing Studio lighting..
3. Luminaire classification and wattage shall be determined in accordance with §130.0(c) of the Standards.

STATE OF CALIFORNIA
INDOOR LIGHTING POWER ALLOWANCE
CEC-NRCC-LTI-03-E (Revised 06/14) CALIFORNIA ENERGY COMMISSION

CERTIFICATE OF COMPLIANCE	NRCC-LTI-03-E
Certificate of Compliance - Indoor Lighting Power Allowance	(Page 4 of 4)
Project Name: AMS Modular Classroom 30'x32' RR' (for DSA)	Date Prepared: 5/26/2015

DOCUMENTATION AUTHOR'S DECLARATION STATEMENT

1. I certify that this Certificate of Compliance documentation is accurate and complete.

Documentation Author Name:	Hans Marsman, CEA, CEPE, LEED AP BD+C	Documentation Author Signature:	H Marsman
Company:	Brummitt Energy Associates, Inc	Signature Date:	5/26/2015
Address:	777 South Highway 101, Suite 203	CEA/ HERS Certification Identification (if applicable):	Senior Energy Analyst (CABEC)
City/State/Zip:	Solana Beach, California 92075	Phone:	619.531.1126

RESPONSIBLE PERSON'S DECLARATION STATEMENT

I certify the following under penalty of perjury, under the laws of the State of California:
1. The information provided on this Certificate of Compliance is true and correct.
2. I am eligible under Division 3 of the Business and Professions Code to accept responsibility for the building design or system design identified on this Certificate of Compliance (responsible designer).
3. The energy features and performance specifications, materials, components, and manufactured devices for the building design or system design identified on this Certificate of Compliance conform to the requirements of Title 24, Part 1 and Part 6 of the California Code of Regulations.
4. The building design features or system design features identified on this Certificate of Compliance are consistent with the information provided on other applicable compliance documents, worksheets, calculations, plans and specifications submitted to the enforcement agency for approval with this building permit application.
5. I will ensure that a completed signed copy of this Certificate of Compliance shall be made available with the building permit(s) issued for the building, and made available to the enforcement agency for all applicable inspections. I understand that a completed signed copy of this Certificate of Compliance is required to be included with the documentation the builder provides to the building owner at occupancy.

Responsible Designer Name:	Randall P Cavannagh	Responsible Designer Signature:	[signature]
Company:	American Modular Systems | Gen7 Schools	Date Signed:	05/26/15
Address:	787 Spreckels Avenue	License:	C12631
City/State/Zip:	Manteca, CA 95336	Phone:	209.825.1921

APPROVED
DIVISION OF STATE ARCHITECT
HIGH PERFORMANCE SECTION
APP.#02- 113921 DATE: 6/10/15
Lydia Baron C.E.P.S.

02-113921 – 30'x32' – 150'x32' EXPOSED STEEL

American Modular Systems
787 Spreckels Ave.Manteca, CA 95336
Phone (209) 825-1921 - Fax (209) 825-7018
americanmodular.com

MODULAR MANUFACTURER PROPRIETARY STATEMENT
THESE DRAWINGS AND THE MATERIAL CONTAINED THEREIN ARE THE PROPERTY OF AMERICAN MODULAR SYSTEMS, INC. (AMS) AND SHALL NOT BE REPRODUCED, COPIED OR OTHERWISE DISPOSED OF DIRECTLY OR INDIRECTLY AND SHALL NOT BE USED IN WHOLE OR IN PART TO ASSIST IN THE MAKING OF OR FOR THE PURPOSE OF FURNISHING ANY INFORMATION FOR THE MAKING OF DRAWINGS, PRINTS, APPARATUS OR PARTS THEREOF WITHOUT THE FULL KNOWLEDGE AND WRITTEN CONSENT OF AMS. ALL PATENTABLE MATERIAL CONTAINED HEREIN AND ORIGINATING WITH AMS SHALL BE THE SOLE PROPERTY OF AMS.

PRE-CHECKED SET NAME
30' x 32' THRU 150' x 32' BUILDINGS

SITE SPECIFIC PROJECT NAME

SHEET TITLE
ENERGY CALCULATIONS

MANUFACTURER PROFESSIONAL OF RECORD ON PC
LICENSED ARCHITECT RANDALL PATRICK CAVANAGH No. C12631 Ren. 03-31-17 STATE OF CALIFORNIA

PROJECT SPECIFIC STATE AGENCY APPROVAL
IDENTIFICATION STAMP DIV. OF THE STATE ARCHITECT
02 116495
AC — FLS SS
DATE 12-18-2017

ORIGINAL PC STATE AGENCY APPROVAL
IDENTIFICATION STAMP DIV. OF THE STATE ARCHITECT CA. DEPT. OF GENERAL SERVICES
PC 02-113921
AC ✓ FLS ✓ SS
DATE 6/19/2015

PRE-CHECK (PC) DOCUMENT – CODE: 2013 CBC
A SEPARATE PROJECT APPLICATION FOR CONSTRUCTION IS REQUIRED

REVISIONS
1
2
3
4

DRAWN BY:
SCALE: AS NOTED
DATE:

SHEET NUMBER
EN.5

STATE OF CALIFORNIA
OUTDOOR LIGHTING
CEC-NRCC-LTO-01-E (Revised 06/14) — CALIFORNIA ENERGY COMMISSION

CERTIFICATE OF COMPLIANCE	NRCC-LTO-01-E
Outdoor Lighting	(Page 1 of 4)
Project Name: AMS Modular Classroom 30'x32 Ext Ltg	Date Prepared: 5/26/2015

Project Address: N/A Climate Zone 1-16, CA	Total Illuminated Hardscape Area 0
General Information Phase of Construction: ☑ New Construction ☐ Addition ☐ Alteration	
Outdoor Lighting Zone (OLZ) ☐ OLZ-1 ☐ OLZ-2 ☑ OLZ-3 ☐ OLZ-4 I have confirmed with the AHJ which OLZ applies to this site. For default lighting zone designations, see Title 24 Part 6, §10-114	

LIGHTING COMPLIANCE DOCUMENTS (check box for each document included)	
For detailed instructions on the use of this and all Energy Efficiency Standards compliance documents, refer to the Nonresidential Manual published by the California Energy Commission.	
☑ NRCC-LTO-01-E	Certificate of Compliance
☑ NRCC-LTO-02-E	Outdoor Lighting Controls Certificate of Compliance
☑ NRCC-LTO-03-E	Outdoor Lighting Power Allowance Certificate of Compliance

Summary of Allowed Outdoor Lighting Power			Watts
1.	Sum Total ALLOWED Outdoor Lighting Wattage from NRCC-LTO-03-E, page 1	=	14
	Complies ONLY if Installed ≤ Allowed		↕
2.	Sum Total INSTALLED Outdoor lighting Wattage from NRCC-LTO-01-E, page 3		14

Declaration of Required Installation Certificates – Declare by checking all Installation Certificates that will be submitted. (Retain copies and verify forms are completed and signed.)	
☑ NRCI-LTO-01-E - Must be submitted for all buildings	☐ Field Inspector
☑ NRCI-LTO-02-E - Must be submitted for a lighting control system, or for an Energy Management Control System (EMCS), to be recognized for compliance.	☐ Field Inspector
Declaration of Required Certificates of Acceptance – Declare by checking all of the Certificates of Acceptance that will be submitted. (Retain copies and verify forms are completed and signed.)	
☑ NRCA-LTO-02-A - Must be submitted for outdoor lighting controls.	☐ Field Inspector

CA Building Energy Efficiency Standards - 2013 Nonresidential Compliance — June 2014

STATE OF CALIFORNIA
OUTDOOR LIGHTING
CEC-NRCC-LTO-01-E (Revised 06/14) — CALIFORNIA ENERGY COMMISSION

CERTIFICATE OF COMPLIANCE	NRCC-LTO-01-E
Outdoor Lighting	(Page 2 of 4)
Project Name: AMS Modular Classroom 30'x32 Ext Ltg	Date Prepared: 5/26/2015

Schedule of luminaires exempt from the outdoor lighting power requirements in §140.7	
Name or Symbol	Description of exempt luminaire in accordance with the exemptions

Schedule of luminaires exempt from the cutoff requirements in §130.2(b)	
Name or Symbol	Description of exempt luminaire in accordance with the exemptions

Schedule of luminaires exempt from the outdoor lighting control requirements in §130.2(c)	
Name or Symbol	Description of exempt luminaire in accordance with the exemptions

CA Building Energy Efficiency Standards - 2013 Nonresidential Compliance — June 2014

STATE OF CALIFORNIA
OUTDOOR LIGHTING
CEC-NRCC-LTO-01-E (Revised 06/14) — CALIFORNIA ENERGY COMMISSION

CERTIFICATE OF COMPLIANCE	NRCC-LTO-01-E
Outdoor Lighting	(Page 3 of 4)
Project Name: AMS Modular Classroom 30'x32 Ext Ltg	Date Prepared: 5/26/2015

A. OUTDOOR LIGHTING SCHEDULE and FIELD INSPECTION ENERGY CHECKLIST

Luminaire Schedule		Installed Watts					Location	Cutoff	Field Inspector	
A	B	C	D		E	F	G	H	I	
Name or Item Tag	Complete Luminaire Description	Watts per Luminaire	How wattage was determined: CEC Default from NA8	According to §130.0(c)	Number of Luminaires	Total Installed Watts in this area (C x E)	Primary Function area in which these luminaires are installed	BUG Rating	Pass	Fail
ISC	ISC LED 2 Light Bar	14.0	☑	☐	1	14	Main Entrance		☐	☐
					INSTALLED WATTS PAGE TOTAL:	14	Enter sum total of all pages (Sum Total INSTALLED Outdoor lighting wattage) into NRCC-LTO-01-E; Page 1		14	

CA Building Energy Efficiency Standards - 2013 Nonresidential Compliance — June 2013

STATE OF CALIFORNIA
OUTDOOR LIGHTING
CEC-NRCC-LTO-01-E (Revised 06/14) — CALIFORNIA ENERGY COMMISSION

CERTIFICATE OF COMPLIANCE	NRCC-LTO-01-E
Outdoor Lighting	(Page 4 of 4)
Project Name: AMS Modular Classroom 30'x32 Ext Ltg	Date Prepared: 5/26/2015

DOCUMENTATION AUTHOR'S DECLARATION STATEMENT	
1. I certify that this Certificate of Compliance documentation is accurate and complete.	
Documentation Author Name: Hans Marsman, CEA, CEPE, LEED AP	Documentation Author Signature: H Marsman
Company: Brummitt Energy Associates, Inc	Signature Date: 5/26/2015
Address: 777 South Highway 101, Suite 203	CEA/ HERS Certification Identification (if applicable): Senior Energy Analyst (CABEC)
City/State/Zip: Solana Beach, California 92075	Phone: 619.531.1126

RESPONSIBLE PERSON'S DECLARATION STATEMENT

I certify the following under penalty of perjury, under the laws of the State of California:
1. The information provided on this Certificate of Compliance is true and correct.
2. I am eligible under Division 3 of the Business and Professions Code to accept responsibility for the building design or system design identified on this Certificate of Compliance (responsible designer).
3. The energy features and performance specifications, materials, components, and manufactured devices for the building design or system design identified on this Certificate of Compliance conform to the requirements of Title 24, Part 1 and Part 6 of the California Code of Regulations.
4. The building design features or system design features identified on this Certificate of Compliance are consistent with the information provided on other applicable compliance documents, worksheets, calculations, plans and specifications submitted to the enforcement agency for approval with this building permit application.
5. I will ensure that a completed signed copy of this Certificate of Compliance shall be made available with the building permit(s) issued for the building, and made available to the enforcement agency for all applicable inspections. I understand that a completed signed copy of this Certificate of Compliance is required to be included with the documentation the builder provides to the building owner at occupancy.

Responsible Designer Name: Randall P Cavannagh	Responsible Designer Signature: [signature]
Company: American Modular Systems | Gen7 School	Date Signed: 05/26/15
Address: 787 Spreckels Avenue	License: C12631
City/State/Zip: Manteca, CA 95336	Phone: 209.825.1921

CA Building Energy Efficiency Standards - 2013 Nonresidential Compliance — June 2013

STATE OF CALIFORNIA
OUTDOOR LIGHTING CONTROLS
CEC-NRCC-LTO-02-E (Revised 06/14) — CALIFORNIA ENERGY COMMISSION

CERTIFICATE OF COMPLIANCE	NRCC-LTO-02-E
Outdoor Lighting Controls	(Page 1 of 3)
Project Name: AMS Modular Classroom 30'x32 Ext Ltg	Date Prepared: 5/26/2015

The NRCC-LTO-02-E shall be used to document all mandatory outdoor lighting controls that are applicable to the project.

Mandatory Outdoor Lighting Control Declaration Statements

Check all that apply:
- ☐ Lighting shall be controlled by self-contained lighting control devices which are certified to the Energy Commission according to the Title 20 Appliance Efficiency Regulations in accordance with §110.9.
- ☐ Lighting shall be controlled by a lighting control system or energy management control system in accordance with §110.9. An Installation Certificate shall be submitted in accordance with §130.4(b).
- ☑ All lighting controls and equipment shall comply with the applicable requirements in §110.9 and shall be installed in accordance with the manufacturer's instructions in accordance with §130.1
- ☐ Part-Night Outdoor Lighting Controls, as defined in Section 100.1, shall meet the requirements in Section 110.9(b)5
- ☐ All outdoor incandescent luminaires rated over 100 watts, determined in accordance with Section 130.0(c), shall be controlled by a motion sensor.
- ☐ All outdoor luminaires rated for use with lamps greater than 150 lamp watts, determined in accordance with Section 130.0(c), shall comply with Backlight, Uplight, and Glare (collectively referred to as "BUG") in accordance with Section 130.2(b)
- ☑ All installed outdoor lighting shall be controlled by a photocontrol or outdoor astronomical time-switch control in accordance with Section 130.2(c)1
- ☒ All installed outdoor lighting shall be circuited and independently controlled from other electrical loads by an automatic scheduling control in accordance with Section 130.2(c)2
- ☑ All installed outdoor lighting, where the bottom of the luminaire is mounted 24 feet or less above the ground, shall be controlled with automatic lighting controls in accordance with Section 130.2(c)3
- ☐ For Outdoor Sales Frontage, Outdoor Sales Lots, and Outdoor Sales Canopies lighting, an automatic lighting control in accordance with Section 130.2(c)4
- ☐ For Building Facade, Ornamental Hardscape and Outdoor Dining lighting, an automatic lighting control in accordance with Section 130.2(c)5
- ☑ Before an occupancy permit is granted for a newly constructed building or area, or a new lighting system serving a building, area, or site is operated for normal use, indoor lighting controls serving the building, area, or site shall be certified as meeting the Acceptance Requirements for Code Compliance in accordance with §130.4.(a). Outdoor lighting controls shall comply with the applicable requirements of Section 130.2(c) and Reference Nonresidential Appendix NA7.8

CA Building Energy Efficiency Standards - 2013 Nonresidential Compliance — June 2014

STATE OF CALIFORNIA
OUTDOOR LIGHTING CONTROLS
CEC-NRCC-LTO-02-E (Revised 06/14) — CALIFORNIA ENERGY COMMISSION

CERTIFICATE OF COMPLIANCE	NRCC-LTO-02-E
Outdoor Lighting Controls	(Page 2 of 3)
Project Name: AMS Modular Classroom 30'x32 Ext Ltg	Date Prepared: 5/26/2015

MANDATORY OUTDOOR LIGHTING CONTROL SCHEDULE and FIELD INSPECTION CHECKLIST

Outdoor Lighting Control Schedule			Standards Complying With [1] (✓ all that apply, or enter 'E' if Exempted)						✓ if Acceptance Test Required	Field Inspector	
A	B	C	D	E	F	G	H	I	N	O	
Location and Application of Luminaires being controlled	Type/ Description of Lighting Control (i.e. motion sensor, photocontrol, outdoor astronomical time-switch control, centralized time-based zone lighting control)	# of Units	§130.2(a)	§130.2(c)1	§130.2(c)2	§130.2(c)3	§130.2(c)4	§130.2(c)5		Pass	Fail
Wall Mtd LED @ entry	Photocontrol	1	E	X	X	E	E	E		☐	☐

CA Building Energy Efficiency Standards - 2013 Nonresidential Compliance — June 2014

STATE OF CALIFORNIA
OUTDOOR LIGHTING CONTROLS
CEC-NRCC-LTO-02-E (Revised 06/14) — CALIFORNIA ENERGY COMMISSION

CERTIFICATE OF COMPLIANCE	NRCC-LTO-02-E
Outdoor Lighting Controls	(Page 3 of 3)
Project Name: AMS Modular Classroom 30'x32 Ext Ltg	Date Prepared: 5/26/2015

DOCUMENTATION AUTHOR'S DECLARATION STATEMENT	
1. I certify that this Certificate of Compliance documentation is accurate and complete.	
Documentation Author Name: Hans Marsman, CEA, CEPE, LEED AP	Documentation Author Signature: H Marsman
Company: Brummitt Energy Associates, Inc	Signature Date: 5/26/2015
Address: 777 South Highway 101, Suite 203	CEA/ HERS Certification Identification (if applicable): Senior Energy Analyst (CABEC)
City/State/Zip: Solana Beach, California 92075	Phone: 619.531.1126

RESPONSIBLE PERSON'S DECLARATION STATEMENT

I certify the following under penalty of perjury, under the laws of the State of California:
1. The information provided on this Certificate of Compliance is true and correct.
2. I am eligible under Division 3 of the Business and Professions Code to accept responsibility for the building design or system design identified on this Certificate of Compliance (responsible designer).
3. The energy features and performance specifications, materials, components, and manufactured devices for the building design or system design identified on this Certificate of Compliance conform to the requirements of Title 24, Part 1 and Part 6 of the California Code of Regulations.
4. The building design features or system design features identified on this Certificate of Compliance are consistent with the information provided on other applicable compliance documents, worksheets, calculations, plans and specifications submitted to the enforcement agency for approval with this building permit application.
5. I will ensure that a completed signed copy of this Certificate of Compliance shall be made available with the building permit(s) issued for the building, and made available to the enforcement agency for all applicable inspections. I understand that a completed signed copy of this Certificate of Compliance is required to be included with the documentation the builder provides to the building owner at occupancy.

Responsible Designer Name: Randall P Cavannagh	Responsible Designer Signature: [signature]
Company: American Modular Systems | Gen7 Schc	Date Signed: 05/26/15
Address: 787 Spreckels Avenue	License: C12631
City/State/Zip: Manteca, CA 95336	Phone: 209.825.1921

CA Building Energy Efficiency Standards - 2013 Nonresidential Compliance — June 2014

STATE OF CALIFORNIA
OUTDOOR LIGHTING POWER ALLOWANCES
CEC-NRCC-LTO-03-E (Revised 06/14) — CALIFORNIA ENERGY COMMISSION

CERTIFICATE OF COMPLIANCE	NRCC-LTO-03-E
Outdoor Lighting Power Allowances	(Page 1 of 4)
Project Name: AMS Modular Classroom 30'x32 Ext Ltg	Date Prepared: 5/26/2015

A. OUTDOOR LIGHTING POWER ALLOWANCE SUMMARY

1. General Hardscape Lighting Power Allowance (Site Total from Section B of NRCC-LTO-03-E)								1. 0
2. Additional Specific "use it or lose it" Lighting Power Allowances listed in each of these cells shall be identical to total allowed watts determined in Section C-1 to C-4 of NRCC-LTO-03-E.								
PER APPLICATION from Section C-1		PER UNIT LENGTH (SALES FRONTAGE) from Section C-2		PER HARDSCAPE AREA (ORNAMENTAL LIGHTING) from Section C-3		PER SPECIFIC AREA from Section C-4		
14	+	0	+	0	+	0	=	2. 14
3. Sum Total ALLOWED Outdoor Lighting Wattage (add rows 1 and 2)								3. 14

B. GENERAL HARDSCAPE LIGHTING POWER ALLOWANCE FROM TABLE 140.7-A

Area Wattage Allowance (AWA)				Linear Wattage Allowance (LWA)			Initial Wattage Allowance (IWA)	Total General Hardscape Lighting Allowance
A	B	C	D	E	F	G	H	I
Name of area	Illuminated Hardscape Area	AWA Per Square Foot	AWA (B x C)	Perimeter Length of General Hardscape	LPA per Linear Foot	LWA (E x F)	IWA (Watts)	D + G + H
							TOTAL	0

CA Building Energy Efficiency Standards - 2013 Nonresidential Compliance — June 2014

STATE OF CALIFORNIA
OUTDOOR LIGHTING POWER ALLOWANCES
CEC-NRCC-LTO-03-E (Revised 06/14) — CALIFORNIA ENERGY COMMISSION

CERTIFICATE OF COMPLIANCE	NRCC-LTO-03-E
Outdoor Lighting Power Allowances	(Page 2 of 4)
Project Name: AMS Modular Classroom 30'x32 Ext Ltg	Date Prepared: 5/26/2015

C. ADDITIONAL "USE IT OR LOSE IT" OUTDOOR LIGHTING POWER ALLOWANCES FOR SPECIFIC APPLICATIONS

☐ The additional specific outdoor lighting power allowance shall be the smaller of the allowed lighting power or the actual lighting power used.
☐ Use Outdoor Lighting Zone (OLZ) that is documented on page 1 of NRCC-LTO-01-E to calculate the specific wattage allowances.

C-1. WATTAGE ALLOWANCE PER APPLICATION – Table 140.7-B

☐ Available only for qualifying locations, which include Building Entrances or Exits; Primary Entrances to Senior Care Facilities, Police Stations, Hospitals, Fire Stations, and Emergency Vehicle Facilities; Drive Up Windows; Vehicle Service Station Uncovered Fuel Dispenser
☐ If more than one luminaire type is used per location, use multiple rows for that location

A	B	C	D	E	F	G	H	I	J
	ALLOTTED WATTS			DESIGN WATTS					
Name of Location for which allowance is claimed	Number of qualifying locations	Wattage Allowance per qualifying location	Allotted Watts (B x C)	Luminaire Code or Symbol	Luminaire Description	Luminaire Quantity	Watts per luminaire	Design Watts (G x H)	Allowed Watts (smaller of D or I)
Building Entry Door (I	1	90	90	ISC	ISC LED 2 Light Bar	1	14.0	14	14
Sum total allowance per application on this site:									14

C-2. WATTAGE ALLOWANCE PER UNIT LENGTH (Sales Frontage) from Table 140.7-B

☐ If more than one luminaire type is used per location, use multiple rows for that location

A	B	C	D	E	F	G	H	I	J
	ALLOTTED WATTS			DESIGN WATTS					
Name of Location for which allowance is claimed	Linear feet of Sales Frontage	Wattage Allowance per linear foot	Allotted Watts (B x C)	Luminaire Code or Symbol	Luminaire Description	Luminaire Quantity	Watts per luminaire	Design Watts (G x H)	Allowed Watts (smaller of D or I)
Sum total allowance for sales frontage on the site:									0

CA Building Energy Efficiency Standards - 2013 Nonresidential Compliance — June 2014

STATE OF CALIFORNIA
OUTDOOR LIGHTING POWER ALLOWANCES
CEC-NRCC-LTO-03-E (Revised 06/14) — CALIFORNIA ENERGY COMMISSION

CERTIFICATE OF COMPLIANCE	NRCC-LTO-03-E
Outdoor Lighting Power Allowances	(Page 3 of 4)
Project Name: AMS Modular Classroom 30'x32 Ext Ltg	Date Prepared: 5/26/2015

C-3. WATTAGE ALLOWANCE PER SQUARE FOOT OF HARDSCAPE AREA (Ornamental Lighting) – Table 140.7-B

☐ Allowance for the total site illuminated hardscape area. Luminaires qualifying for this allowance shall be rated for 100 watts or less as determined in accordance with Section 130.0(c), and shall be post-top luminaires, lanterns, pendant luminaires, or chandeliers.
☐ If more than one luminaire type is used per location, use multiple rows for that location

A	B	C	D	E	F	G	H	I	J
	ALLOTTED WATTS			DESIGN WATTS					
Name of area for which ornamental allowance is claimed	Square feet of Hardscape	Wattage Allowance per square foot	Allotted Watts (B x C)	Luminaire Code or Symbol	Luminaire Description	Luminaire Quantity	Watts per luminaire	Design Watts (G x H)	Allowed Watts (smaller of D or I)
Sum total allowance for ornamental lighting on the site:									0

C-4. WATTAGE ALLOWANCE PER SQUARE FOOT OF SPECIFIC AREA - Table 140.7-B

☐ Allowances for Building Facades; Outdoor Sales Lots; Vehicle Service Station Hardscape; Vehicle Service Station Canopies; Sales Canopies; Non-sales Canopies; Guard Stations; Student Pick-up/Drop-off zone: Outdoor Dining; Special Security Lighting for Retail Parking and Pedestrian Hardscape.
☐ If more than one luminaire type is used per location, use multiple rows for that location

A	B	C	D	E	F	G	H	I	J
	ALLOTTED WATTS			DESIGN WATTS					
Name of Location for which allowance is claimed	Illuminated Area of Application	Wattage Allowance per square foot	Allotted Watts (B x C)	Luminaire Code or Symbol	Luminaire Description	Luminaire Quantity	Watts per luminaire	Design Watts (G x H)	Allowed Watts (smaller of D or I)
Sum total allowance for specific area on the site:									0

CA Building Energy Efficiency Standards - 2013 Nonresidential Compliance — June 2014

STATE OF CALIFORNIA
OUTDOOR LIGHTING POWER ALLOWANCES
CEC-NRCC-LTO-03-E (Revised 06/14) — CALIFORNIA ENERGY COMMISSION

CERTIFICATE OF COMPLIANCE	NRCC-LTO-03-E
Outdoor Lighting Power Allowances	(Page 4 of 4)
Project Name: AMS Modular Classroom 30'x32 Ext Ltg	Date Prepared: 5/26/2015

DOCUMENTATION AUTHOR'S DECLARATION STATEMENT	
1. I certify that this Certificate of Compliance documentation is accurate and complete.	
Documentation Author Name: Hans Marsman, CEA, CEPE, LEED AP BD+C	Documentation Author Signature: H Marsman
Company: Brummitt Energy Associates, Inc	Signature Date: 5/26/2015
Address: 777 South Highway 101, Suite 203	CEA/ HERS Certification Identification (if applicable): Senior Energy Analyst (CABEC)
City/State/Zip: Solana Beach, California 92075	Phone: 619.531.1126

RESPONSIBLE PERSON'S DECLARATION STATEMENT

I certify the following under penalty of perjury, under the laws of the State of California:
1. The information provided on this Certificate of Compliance is true and correct.
2. I am eligible under Division 3 of the Business and Professions Code to accept responsibility for the building design or system design identified on this Certificate of Compliance (responsible designer).
3. The energy features and performance specifications, materials, components, and manufactured devices for the building design or system design identified on this Certificate of Compliance conform to the requirements of Title 24, Part 1 and Part 6 of the California Code of Regulations.
4. The building design features or system design features identified on this Certificate of Compliance are consistent with the information provided on other applicable compliance documents, worksheets, calculations, plans and specifications submitted to the enforcement agency for approval with this building permit application.
5. I will ensure that a completed signed copy of this Certificate of Compliance shall be made available with the building permit(s) issued for the building, and made available to the enforcement agency for all applicable inspections. I understand that a completed signed copy of this Certificate of Compliance is required to be included with the documentation the builder provides to the building owner at occupancy.

Responsible Designer Name: Randall P Cavannagh	Responsible Designer Signature: [signature]
Company: American Modular Systems | Gen7 Schools	Date Signed: 05/26/15
Address: 787 Spreckels Avenue	License: C12631
City/State/Zip: Manteca, CA 95336	Phone: 209.825.1921

APPROVED
DIVISION OF STATE ARCHITECT
HIGH PERFORMANCE SECTION
APP.# 02-113921 DATE: 6/10/15
Lydia Barron, C.E.P.E.

CA Building Energy Efficiency Standards - 2013 Nonresidential Compliance — June 2014

02-113921 – 30'x32' – 150'x32' EXPOSED STEEL

American Modular Systems
787 Spreckels Ave.Manteca, CA 95336
Phone (209) 825-1921 - Fax (209) 825-7018
americanmodular.com

MODULAR MANUFACTURER PROPRIETARY STATEMENT

THESE DRAWINGS AND THE MATERIAL CONTAINED THEREIN ARE THE PROPERTY OF AMERICAN MODULAR SYSTEMS, INC. (AMS) AND SHALL NOT BE REPRODUCED, COPIED OR OTHERWISE DISPOSED OF DIRECTLY OR INDIRECTLY AND SHALL NOT BE USED IN WHOLE OR IN PART TO ASSIST IN THE MAKING OF OR FOR THE PURPOSE OF FURNISHING ANY INFORMATION FOR THE MAKING OF DRAWINGS, PRINTS, APPARATUS OR PARTS THEREOF WITHOUT THE FULL KNOWLEDGE AND WRITTEN CONSENT OF AMS. ALL PATENTABLE MATERIAL CONTAINED HEREIN AND ORIGINATING WITH AMS SHALL BE THE SOLE PROPERTY OF AMS.

PRE-CHECKED SET NAME

30' x 32' THRU 150' x 32' BUILDINGS

SITE SPECIFIC PROJECT NAME

SHEET TITLE

ENERGY CALCULATIONS

MANUFACTURER PROFESSIONAL OF RECORD ON PC

LICENSED ARCHITECT — RANDALL PATRICK CAVANAGH — No. C12631 — Ren. 03-31-17 — STATE OF CALIFORNIA

PROJECT SPECIFIC STATE AGENCY APPROVAL

IDENTIFICATION STAMP
DIV. OF THE STATE ARCHITECT
02 116495
AC — FLS — SS dos
DATE 12-18-2018

ORIGINAL PC STATE AGENCY APPROVAL

IDENTIFICATION STAMP
DIV. OF THE STATE ARCHITECT
CA. DEPT. OF GENERAL SERVICES
PC 02-113921
AC ✓ FLS ✓ SS ✓
DATE 6/19/2015

PRE-CHECK (PC) DOCUMENT – CODE: 2013 CBC
A SEPARATE PROJECT APPLICATION FOR CONSTRUCTION IS REQUIRED

REVISIONS
1
2
3
4

DRAWN BY:
SCALE: AS NOTED
DATE:

SHEET NUMBER

EN.6

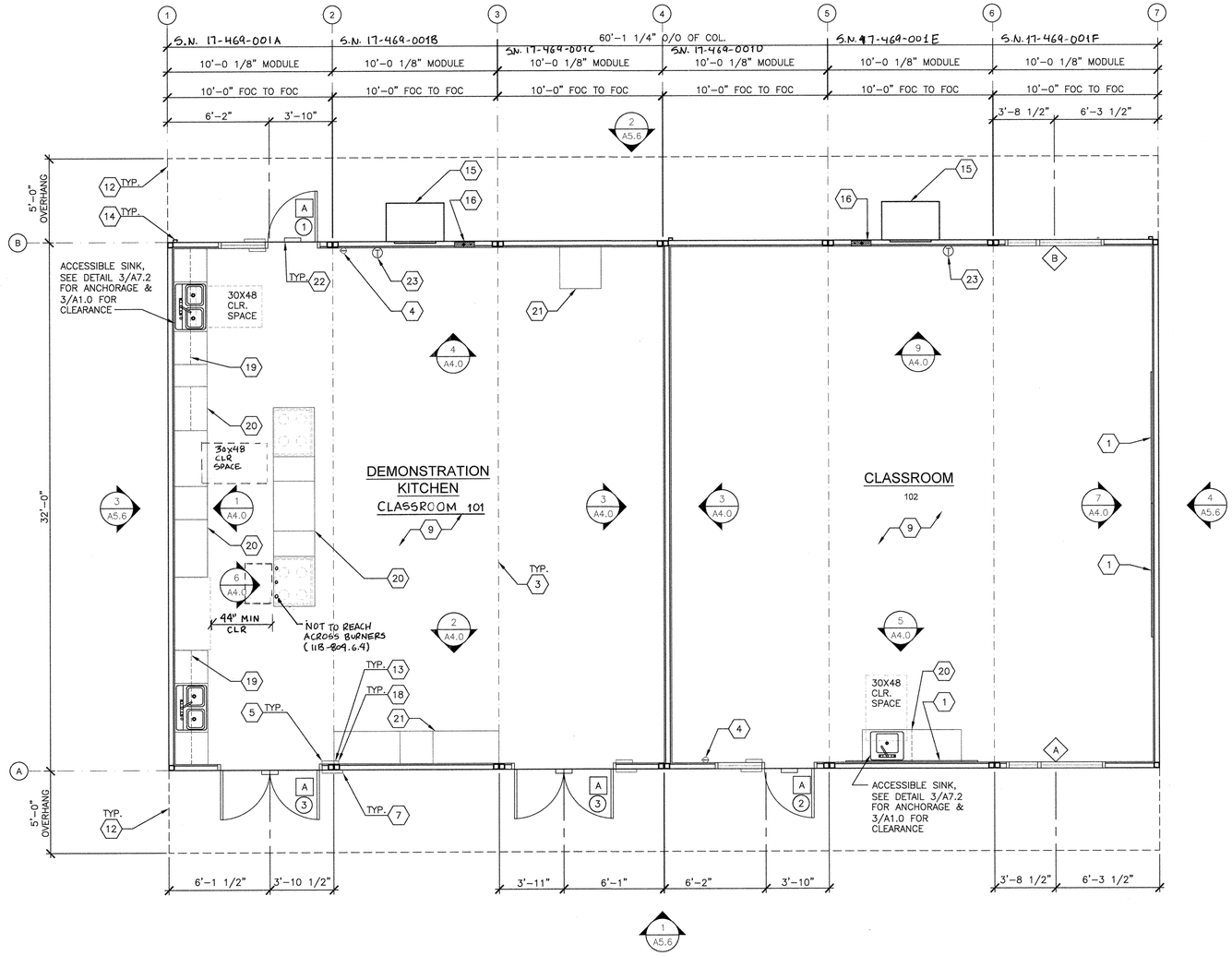

DEMONSTRATION KITCHEN FLOOR PLAN

SCALE: 1/4" = 1'-0" 1

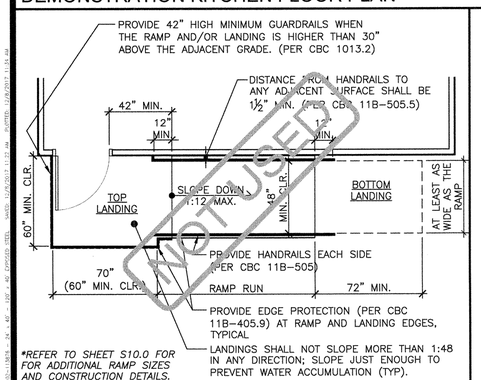

TYPICAL RAMP PLAN - OPTIONAL

SCALE: 1/4" = 1'-0" 2

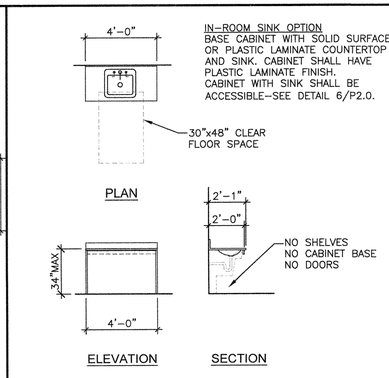

CLASSROOM SINK - OPTION

SCALE: 1/4" = 1'-0" 3

1. REFER TO SHEETS N5.0 AND N5.1 FOR ADDITIONAL FLOOR PLAN CONFIGURATIONS.
2. INTERIOR WALLS MAY OCCUR THROUGHOUT BUILDING. REFER TO SHEETS S8.0 OR S9.0 FOR ATTACHMENTS.
3. PANIC HARDWARE COMPLYING WITH C.B.C. 1008.1.10 IS REQUIRED TO BE INSTALLED WHEN THE CONFIGURATION OF ANY ROOM PROVIDES AN OCCUPANT LOAD OF 50 OR GREATER.
4. IF OCCUPANCY LOAD EXCEEDS 50, PROVIDE A SECOND EXIT DOOR, PER CBC TABLE 1015.1.
5. FOR ROOMS OR SPACES CLASSIFIED AS AN ASSEMBLY OCCUPANCY, PROVIDE AN OCCUPANT LOAD SIGN (BY OTHERS) IN A CONSPICUOUS PLACE, NEAR THE MAIN EXIT, PER C.B.C. SECTION 1004.3.

STANDARD NOTES

SITE NOTE

3/16:12 (1%) MINIMUM TO 1/4:12 (2%) MAXIMUM GRADE FROM FACE OF BUILDING MUST BE ADHERED TO FOR WATER RUN-OFF. PONDING MAY OCCUR AROUND THE PERIMETER OF THE BUILDING.

- (X) = KEY NOTE – SEE LIST ON THIS SHEET
- (X) = DOOR TYPE – SEE SCHEDULE SHEET N3.0
- [X] = DOOR HARDWARE – SEE HARDWARE SCHEDULE SHEET N3.0
- <X> = WINDOW TYPE – SEE SCHEDULE SHEET N3.0

SHEET SYMBOLS

1. 8'x4' MARKER BOARDS – SEE A4.0
2. NOT USED
3. TYP MOD LINE
4. FIRE EXTINGUISHER. TOP OF HANDLE @ +48" AFF 4" MAX PROTRUSION FORM WALL IF FIRE EXTINGUISHER IS ABOVE 27" A.F.F.
5. TACTILE EXIT SIGN PER DETAIL 10/N4.0 (BY OTHERS)
6. NOT USED
7. ROOM SIGNAGE AND ISA PER DETAILS 5&9/N4.0 (BY OTHERS)
8. NOT USED
9. FLOORING
10. NOT USED
11. NOT USED
12. OVERHANG ABOVE
13. OCCUPANT LOAD SIGN PER DETAIL 11/N4.0 (BY OTHERS)
14. DOWNSPOUT – DISCHARGE TO SPLASH BLOCK (U.O.N.) (QUANTITY AND LOCATION MAY VARY)
15. HVAC – SEE MECHANICAL
16. ELECTRICAL PANEL (LOCATION MAY VARY)
17. NOT USED
18. FLOOR LIVE LOAD & SNOW LOAD SIGN PER 2013 CBC SECTION 1603.1.1
19. UPPER CABINET
20. LOWER CABINET
21. TALL CABINET
22. EXTERIOR LIGHT – REFER TO ELECTTRICAL SHEETS
23. THERMOSTAT

KEY NOTES

ENERGY CONTROLS

1. DEMAND RESPONSE CONTROLS:
   ONLY REQUIRED IN BUILDINGS LARGER THAN 10,000 S.F., THEREFORE, NOT REQUIRED FOR THIS PC.
2. AUTOMATIC DAYLIGHTING CONTROLS:
   NOT REQUIRED IN ROOMS WHERE COMBINED INSTALLED LIGHTING POWER IN COMBINED SKYLIT & PRIMARY DAYLIT ZONES ARE <120 WATTS. INSTALLED WATTAGE IN PRIMARY SIDELIT DAY LIT ZONE IS 80 WATTS (2x 40w). THEREFORE, AUTOMATIC DAYLIGHTING CONTROLS ARE ONLY REQUIRED WHEN "SOLATUBES" ARE INSTALLED. SEE A1.1
3. ENERGY MANAGEMENT CONTROL SYSTEM (EMCS) CONNECTION:
   PER TITLE 24 CODE, "AN EMCS MAY BE INSTALLED TO COMPLY WITH THE REQUIREMENTS OF ONE OR MORE LIGHTING CONTROLS IF IT MEETS THE MINIMUM REQUIREMENTS". PC MAY CONTAIN OCCUPANCY SENSORS AND PHOTOCELLS CONTROL LIGHTING, IN THAT CASE, AN EMCS IS NOT REQUIRED FOR THIS PC.
4. SOLAR –READY ZONE REQUIREMENTS:
   REQUIREMENTS, DETAIL & TABLE CAN BE FOUND ON SHEET A2.0

NOTE: ANY MONITORING EQUIPMENT OR ASSOCIATED SENSORS ARE SITE SPECIFIC AND ARE NOT INCLUDED IN THE BASE PC.

ENERGY NOTES

ACOUSTIC CONTROLS

1. WHEN THE PRE-CHECK (PC) BUILDING IS SITE ADAPTED, THE BUILDING AND SITE FEATURES SHALL COMPLY WITH THE CALGREEN CODE, SECTION 5.507.4, FOR THE SPECIFIC SITE LOCATION.
2. MINIMUM WALL ASSEMBLIES:
   WALL ASSEMBLIES SHALL BE CONSTRUCTED PER DETAIL SHEETS A5.1, A5.3, A5.5, A5.7, & A8.0, WITH EITHER 2x4 WOOD STUDS OR 6" STEEL STUDS PER LISTED OPTIONS. MINIMUM STC RATINGS LISTED BELOW ARE PER THE CATALOG OF STC & IIC RATINGS FOR WALL AND FLOOR/CEILING ASSEMBLIES, PRODUCED BY THE OFFICE OF NOISE CONTROL – CA DEPARTMENT OF HEALTH SERVICES.

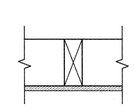

(1) LAYER 1/2" GYPSUM BOARD SECURED TO MIN. 2x4 STUDS @ 16" O.C. MAX.

STC=28 (CATALOG SECTION 1.2.1.5.4.1)
TEST REF.: NATIONAL RESEARCH COUNCIL OF CANADA – NRC #66

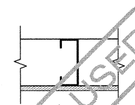

(1) LAYER 1/2" GYPSUM BOARD SECURED TO MIN. 2 1/2" METAL STUDS @ 24" O.C. MAX.

STC=27 (CATALOG SECTION 1.3.2.5.4.1)
TEST REF.: NATIONAL RESEARCH COUNCIL OF CANADA – NRC #66

3. IN THE EVENT THAT A PC CLASSROOM IS DESIGNED TO CONNECT TO ANOTHER PC CLASSROOM OR RESTROOM, INTERIOR SOUND TRANSMISSION IN THE INTERIOR ADJOINING WALL AND FLOOR/CEILING SHALL MEET THE MINIMUM REQUIREMENT OF A STC OF 40, PER CALGREEN CODE SECTION 507.4.3.
4. MINIMUM WINDOW & DOOR RATINGS:
   ALL WINDOWS AND DOORS SPECIFIED ON THE SCHEDULES FOUND ON SHEET N3.0 OF THIS PACKAGE SHALL MEET A MINIMUM STC RATING OF 27.

ACOUSTIC NOTES

American Modular Systems
787 Spreckels Ave. Manteca, CA 95336
Phone (209) 825-1921 - Fax (209) 825-7018
americanmodular.com

MODULAR MANUFACTURER PROPRIETARY STATEMENT

THESE DRAWINGS AND THE MATERIAL CONTAINED THEREIN ARE THE PROPERTY OF AMERICAN MODULAR SYSTEMS, INC. (AMS) AND SHALL NOT BE REPRODUCED, COPIED OR OTHERWISE DISPOSED OF DIRECTLY OR INDIRECTLY AND SHALL NOT BE USED IN WHOLE OR IN PART TO ASSIST IN THE MAKING OF OR FOR THE PURPOSE OF FURNISHING ANY INFORMATION FOR THE MAKING OF DRAWINGS, PRINTS, APPARATUS OR PARTS THEREOF WITHOUT THE FULL KNOWLEDGE AND WRITTEN CONSENT OF AMS. ALL PATENTABLE MATERIAL CONTAINED HEREIN AND ORIGINATING WITH AMS SHALL BE THE SOLE PROPERTY OF AMS.

PRE-CHECKED SET NAME

30' x 32' THRU 150' x 32' BUILDINGS

SITE SPECIFIC PROJECT NAME

MARIN COMMUNITY CSD - INDIAN VALLEY CAMPUS 60x32 BUILDING

SHEET TITLE

DEMONSTRATION KITCHEN FLOOR PLAN

MANUFACTURER PROFESSIONAL OF RECORD ON PC

PROJECT SPECIFIC STATE AGENCY APPROVAL

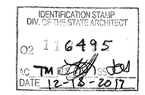

ORIGINAL PC STATE AGENCY APPROVAL

BASED ON PC# 02-113921
PRE-CHECK (PC) DOCUMENT – CODE: 2013 CBC
A SEPARATE PROJECT APPLICATION FOR CONSTRUCTION IS REQUIRED

REVISIONS

1	
2	
3	
4	

DRAWN BY:	BA
SCALE:	AS NOTED
DATE:	11/10/17

SHEET NUMBER

A1.0

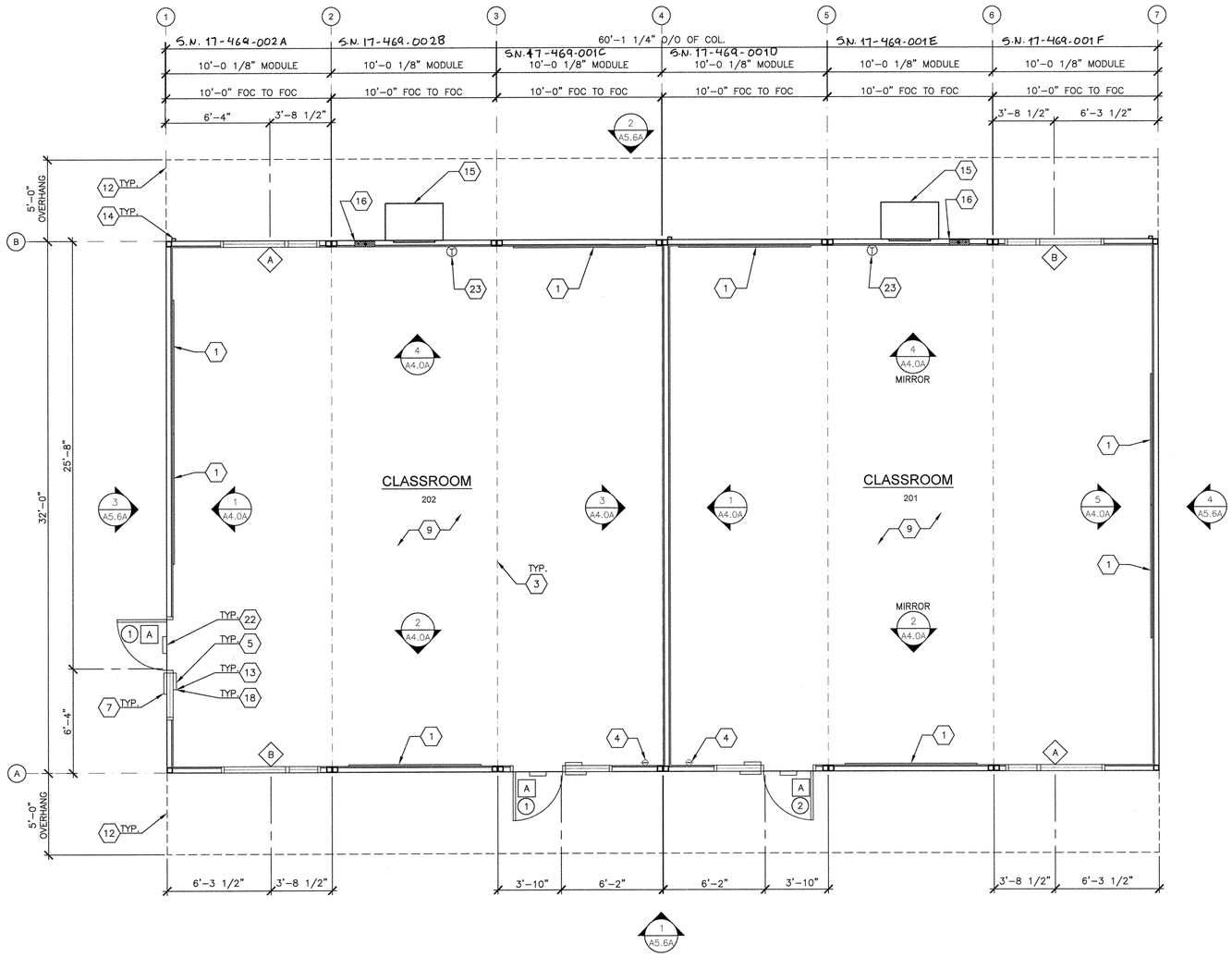

CLASSROOM FLOOR PLAN

SCALE: 1/4" = 1'-0" 1

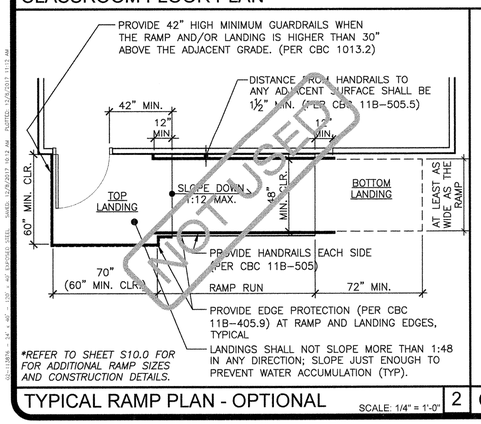

TYPICAL RAMP PLAN - OPTIONAL

SCALE: 1/4" = 1'-0" 2

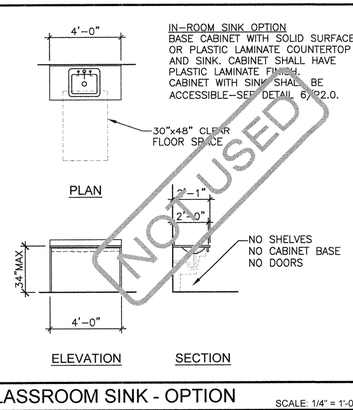

CLASSROOM SINK - OPTION

SCALE: 1/4" = 1'-0" 3

1. REFER TO SHEETS N5.0 AND N5.1 FOR ADDITIONAL FLOOR PLAN CONFIGURATIONS.
2. INTERIOR WALLS MAY OCCUR THROUGHOUT BUILDING. REFER TO SHEETS S8.0 OR S9.0 FOR ATTACHMENTS.
3. PANIC HARDWARE COMPLYING WITH C.B.C. 1008.1.10 IS REQUIRED TO BE INSTALLED WHEN THE CONFIGURATION OF ANY ROOM PROVIDES AN OCCUPANT LOAD OF 50 OR GREATER.
4. IF OCCUPANCY LOAD EXCEEDS 50, PROVIDE A SECOND EXIT DOOR, PER CBC TABLE 1015.1.
5. FOR ROOMS OR SPACES CLASSIFIED AS AN ASSEMBLY OCCUPANCY, PROVIDE AN OCCUPANT LOAD SIGN (BY OTHERS) IN A CONSPICUOUS PLACE, NEAR THE MAIN EXIT, PER C.B.C. SECTION 1004.3.

STANDARD NOTES

- (X) = KEY NOTE – SEE LIST ON THIS SHEET
- (X) = DOOR TYPE – SEE SCHEDULE SHEET N3.0
- [X] = DOOR HARDWARE – SEE HARDWARE SCHEDULE SHEET N3.0
- <X> = WINDOW TYPE – SEE SCHEDULE SHEET N3.0

SHEET SYMBOLS

1. 8'x4' MARKER BOARDS – SEE A4.0
2. NOT USED
3. TYP MOD LINE
4. FIRE EXTINGUISHER. TOP OF HANDLE @ +48" AFF 4" MAX PROTRUSION FORM WALL IF FIRE EXTINGUISHER IS ABOVE 27" A.F.F.
5. TACTILE EXIT SIGN PER DETAIL 10/N4.0 (BY OTHERS)
6. NOT USED
7. ROOM SIGNAGE AND ISA PER DETAILS 5&9/N4.0 (BY OTHERS)
8. NOT USED
9. FLOORING
10. NOT USED
11. NOT USED
12. OVERHANG ABOVE
13. OCCUPANT LOAD SIGN PER DETAIL 11/N4.0 (BY OTHERS)
14. DOWNSPOUT – DISCHARGE TO SPLASH BLOCK (U.O.N.) (QUANTITY AND LOCATION MAY VARY)
15. HVAC – SEE MECHANICAL
16. ELECTRICAL PANEL (LOCATION MAY VARY)
17. NOT USED
18. FLOOR LIVE LOAD & SNOW LOAD SIGN PER 2013 CBC SECTION 1603.1.1
19. NOT USED
20. NOT USED
21. NOT USED
22. EXTERIOR LIGHT – REFER TO ELECTTRICAL SHEETS
23. THERMOSTAT

KEY NOTES

ENERGY CONTROLS

1. DEMAND RESPONSE CONTROLS:
   ONLY REQUIRED IN BUILDINGS LARGER THAN 10,000 S.F., THEREFORE, NOT REQUIRED FOR THIS PC.
2. AUTOMATIC DAYLIGHTING CONTROLS:
   NOT REQUIRED IN ROOMS WHERE COMBINED INSTALLED LIGHTING POWER IN COMBINED SKYLIT & PRIMARY DAYLIT ZONES ARE <120 WATTS. INSTALLED WATTAGE IN PRIMARY SIDELIT DAY LIT ZONE IS 80 WATTS (2x 40w), THEREFORE, AUTOMATIC DAYLIGHTING CONTROLS ARE ONLY REQUIRED WHEN "SOLATUBES" ARE INSTALLED. SEE A1.1
3. ENERGY MANAGEMENT CONTROL SYSTEM (EMCS) CONNECTION:
   PER TITLE 24 CODE, "AN EMCS MAY BE INSTALLED TO COMPLY WITH THE REQUIREMENTS OF ONE OR MORE LIGHTING CONTROLS IF IT MEETS THE MINIMUM REQUIREMENTS". PC MAY CONTAIN OCCUPANCY SENSORS AND PHOTOCELLS CONTROL LIGHTING, IN THAT CASE, AN EMCS IS NOT REQUIRED FOR THIS PC.
4. SOLAR –READY ZONE REQUIREMENTS:
   REQUIREMENTS, DETAIL & TABLE CAN BE FOUND ON SHEET A2.0

NOTE: ANY MONITORING EQUIPMENT OR ASSOCIATED SENSORS ARE SITE SPECIFIC AND ARE NOT INCLUDED IN THE BASE PC.

ENERGY NOTES

ACOUSTIC CONTROLS

1. WHEN THE PRE-CHECK (PC) BUILDING IS SITE ADAPTED, THE BUILDING AND SITE FEATURES SHALL COMPLY WITH THE CALGREEN CODE, SECTION 5.507.4, FOR THE SPECIFIC SITE LOCATION.
2. MINIMUM WALL ASSEMBLIES:
   WALL ASSEMBLIES SHALL BE CONSTRUCTED PER DETAIL SHEETS A5.1, A5.3, A5.5, A5.7, & A8.0, WITH EITHER 2x4 WOOD STUDS OR 6" STEEL STUDS PER LISTED OPTIONS. MINIMUM STC RATINGS LISTED BELOW ARE PER THE CATALOG OF STC & IIC RATINGS FOR WALL AND FLOOR/CEILING ASSEMBLIES, PRODUCED BY THE OFFICE OF NOISE CONTROL – CA DEPARTMENT OF HEALTH SERVICES.

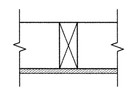

(1) LAYER 1/2" GYPSUM BOARD SECURED TO MIN. 2x4 STUDS @ 16" O.C. MAX.

STC=28 (CATALOG SECTION 1.2.1.5.4.1)
TEST REF.: NATIONAL RESEARCH COUNCIL OF CANADA – NRC #66

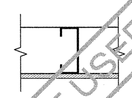

(1) LAYER 1/2" GYPSUM BOARD SECURED TO MIN. 2 1/2" METAL STUDS @ 24" O.C. MAX.

STC=27 (CATALOG SECTION 1.3.2.5.4.1)
TEST REF.: NATIONAL RESEARCH COUNCIL OF CANADA – NRC #66

3. IN THE EVENT THAT A PC CLASSROOM IS DESIGNED TO CONNECT TO ANOTHER PC CLASSROOM OR RESTROOM, INTERIOR SOUND TRANSMISSION IN THE INTERIOR ADJOINING WALL AND FLOOR/CEILING SHALL MEET THE MINIMUM REQUIREMENT OF A STC OF 40, PER CALGREEN CODE SECTION 507.4.3.
4. MINIMUM WINDOW & DOOR RATINGS:
   ALL WINDOWS AND DOORS SPECIFIED ON THE SCHEDULES FOUND ON SHEET N3.0 OF THIS PACKAGE SHALL MEET A MINIMUM STC RATING OF 27.

ACOUSTIC NOTES

NOT USED

American Modular Systems
787 Spreckels Ave. Manteca, CA 95336
Phone (209) 825-1921 - Fax (209) 825-7018
americanmodular.com

MODULAR MANUFACTURER PROPRIETARY STATEMENT
THESE DRAWINGS AND THE MATERIAL CONTAINED THEREIN ARE THE PROPERTY OF AMERICAN MODULAR SYSTEMS, INC. (AMS) AND SHALL NOT BE REPRODUCED, COPIED OR OTHERWISE DISPOSED OF DIRECTLY OR INDIRECTLY AND SHALL NOT BE USED IN WHOLE OR IN PART TO ASSIST IN THE MAKING OF OR FOR THE PURPOSE OF FURNISHING ANY INFORMATION FOR THE MAKING OF DRAWINGS, PRINTS, APPARATUS OR PARTS THEREOF WITHOUT THE FULL KNOWLEDGE AND WRITTEN CONSENT OF AMS. ALL PATENTABLE MATERIAL CONTAINED HEREIN AND ORIGINATING WITH AMS SHALL BE THE SOLE PROPERTY OF AMS.

PRE-CHECKED SET NAME
30' x 32' THRU 150' x 32' BUILDINGS

SITE SPECIFIC PROJECT NAME
MARIN COMMUNITY CSD - INDIAN VALLEY CAMPUS 60x32 BUILDING

SHEET TITLE
CLASSROOM FLOOR PLAN

MANUFACTURER PROFESSIONAL OF RECORD ON PC

LICENSED ARCHITECT · TIMOTHY PATRICK MURPHY · No. C12631 Ren. 3-31-19 · STATE OF CALIFORNIA

PROJECT SPECIFIC STATE AGENCY APPROVAL

IDENTIFICATION STAMP DIV. OF THE STATE ARCHITECT
02 I 16495
DATE: 12-18-2017

ORIGINAL PC STATE AGENCY APPROVAL

BASED ON PC# 02-113921
PRE-CHECK (PC) DOCUMENT – CODE: 2013 CBC
A SEPARATE PROJECT APPLICATION FOR CONSTRUCTION IS REQUIRED

REVISIONS
1
2
3
4

DRAWN BY:	BA
SCALE:	AS NOTED
DATE:	11/10/17

SHEET NUMBER
A1.0A

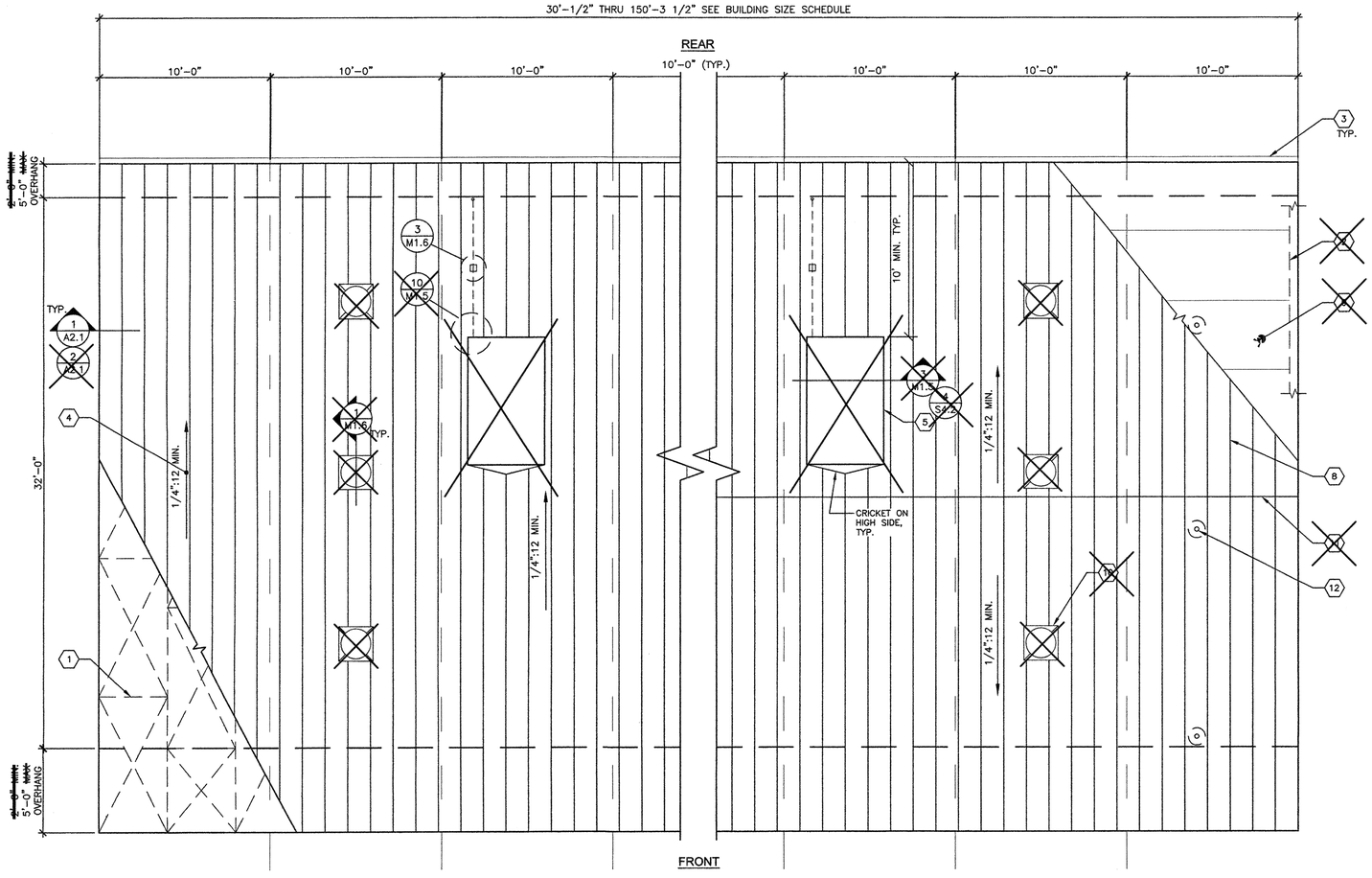

SCALE : 1/4"=1'-0" 1

TYPICAL ROOF PLAN

BUILDING SIZE	ROOF AREA	MINIMUM No. OF DRAINS	SIZE OF DRAIN
☐ 30' x 32'	1170	1	2x3
☐ 40' x 32'	1560	1	2x3
☐ 50' x 32'	1950	1	2x3
☒ 60' x 32'	2340	1	2x3
☐ 70' x 32'	2730	1	2x3
☐ 80' x 32'	3120	2	2x3
☐ 90' x 32'	3510	2	2x3
☐ 100' x 32'	3900	2	2x3
☐ 110' x 32'	4290	2	2x3
☐ 120' x 32'	4680	2	2x3
☐ 130' x 32'	5070	2	2x3
☐ 140' x 32'	5460	2	2x3
☐ 150' x 32'	5850	2	2x3

NOTES:
1. DOWNSPOUTS & LEADERS PER C.P.C. 1106.1 AND TABLE 1101.11.
2. PC DOWNSPOUT SIZING BASED ON ROOF AREA AND MAX CALIFORNIA RAINFALL RATE OF 3" PER HOUR. SITE SPECIFIC BUILDING MAY UTILIZE LOCAL RAINFALL RATE--PROVIDE SITE RAINFALL RATE TO DETERMINE MINIMUM NUMBER OF DRAINS REQUIRED.

ROOF DRAIN SCHEDULE

NOT USED 2

NOT USED 3

NOT USED 4

1 OSB SHEATHING
~~2 OPTIONAL PARAPET – SEE SHEET S1.5~~
3 GUTTER – SEE 5/A2.1
4 ROOF SLOPE
~~5 ROOF MOUNT HVAC UNITS – SEE MECHANICAL PLANS, DETAIL 11/M1.4~~
~~ATTIC MOUNT HVAC UNITS – SEE DETAIL 5/M1.5~~
6 NOT USED
7 NOT USED
8 STANDING SEAM METAL ROOF – SEE DETAILS ON SHEET A2.1
~~9 TPO ROOF OPTION – SEE DETAILS ON SHEET A2.1~~
~~10 SOLATUBE SKY LIGHTS – OPTIONAL~~
~~11 RIDGE AT DUAL OPTION SLOPE~~
12 PIPE VENT – SEE PLUMBING PLANS (2/M1.6)

KEYNOTES

SOLAR ZONE REQUIRED, PER TITLE 24 SECTION 110.10: FOR NON-RESIDENTIAL BUILDINGS, 3 STORIES OR LESS, A MINIMUM OF 15% OF ROOF AREA (EXCLUDING SKYLIGHTS) MUST BE SET ASIDE FOR PHOTO-VOLTAICS (PV). THE ROOF MUST HAVE NO ROOF OBSTRUCTIONS.

1. REQUIRED SOLAR-READY ZONE, AREA PER THE CHART BELOW, MUST BE PROVIDED ON BUILDING ROOF.
2. ZONE MUST BE LEFT VOID OF ROOF-MOUNTED HVAC UNITS, SKYLIGHTS OR OTHER OBSTRUCTIONS THAT WOULD HINDER FUTURE INSTALLATION OF SOLAR SYSTEM COMPONENTS, INCLUDING PV PANELS.
3. TOTAL AREA REQUIRED FOR SOLAR-READY ZONE DOES NOT NEED TO BE LOCATED IN ONE AREA BUT CAN BE SPREAD OUT OVER ROOF.
4. SOLAR-READY ZONE SHALL NOT INCLUDE ROOF OVERHANGS, AND SOLAR SYSTEM COMPONENTS MAY NOT BE PLACED THERE.
5. THE ROOF STRUCTURE HAS BEEN DESIGNED PER THE DESIGN LOADS SPECIFIED ON SHEET TS WITH A DESIGN ROOF DEAD LOAD OF 14.8 PSF WHICH MAY NOT INCLUDE ADDITIONAL LOADS FROM SOLAR EQUIPMENT THAT MIGHT BE INSTALLED AT A LATER DATE.
6. EQUIPMENT SUCH AS SOLAR MODULES, INVERTERS, AND METERING EQUIPMENT DO NOT NEED TO BE INSTALLED, NOR DOES CONDUIT, PIPING, OR PRE-INSTALLED MOUNTING HARDWARE.
7. A STRUCTURAL ENGINEER OF RECORD SHOULD BE CONSULTED PRIOR TO ANY FUTURE SOLAR INSTALLATIONS TO DETERMINE THE ADEQUACY OF THE ROOF FRAMING TO SUSTAIN THE LOADS OF THE INSTALLATION ON THE BUILDING STRUCTURE.

REQUIRED SOLAR-READY ZONE

BUILDING	MAX. ROOF AREA (SQ. FT.)	REQ'D ZONE AREA (SQ. FT.)
☐ 30' x 32'	960	144
☐ 40' x 32'	1280	192
☐ 50' x 32'	1600	240
☒ 60' x 32'	1920	288
☐ 70' x 32'	2240	336
☐ 80' x 32'	2560	384
☐ 90' x 32'	2880	432
☐ 100' x 32'	3200	480
☐ 110' x 32'	3520	528
☐ 120' x 32'	3840	576
☐ 130' x 32'	4160	624
☐ 140' x 32'	4480	672
☐ 150' x 32'	4800	720

SOLAR-READY ZONE REQUIREMENTS

American Modular Systems
787 Spreckels Ave.Manteca, CA 95336
Phone (209) 825-1921 - Fax (209) 825-7018
americanmodular.com

MODULAR MANUFACTURER PROPRIETARY STATEMENT

THESE DRAWINGS AND THE MATERIAL CONTAINED THEREIN ARE THE PROPERTY OF AMERICAN MODULAR SYSTEMS, INC. (AMS) AND SHALL NOT BE REPRODUCED, COPIED OR OTHERWISE DISPOSED OF DIRECTLY OR INDIRECTLY AND SHALL NOT BE USED IN WHOLE OR IN PART TO ASSIST IN THE MAKING OF OR FOR THE PURPOSE OF FURNISHING ANY INFORMATION FOR THE MAKING OF DRAWINGS, PRINTS, APPARATUS OR PARTS THEREOF WITHOUT THE FULL KNOWLEDGE AND WRITTEN CONSENT OF AMS. ALL PATENTABLE MATERIAL CONTAINED HEREIN AND ORIGINATING WITH AMS SHALL BE THE SOLE PROPERTY OF AMS.

PRE-CHECKED SET NAME

30' x 32' THRU 150' x 32' BUILDINGS

SITE SPECIFIC PROJECT NAME

SHEET TITLE

ROOF PLAN

MANUFACTURER PROFESSIONAL OF RECORD ON PC

LICENSED ARCHITECT SAMUEL PATRICK GIBBONS No. C12631 Ren. 08-31-17 STATE OF CALIFORNIA

PROJECT SPECIFIC STATE AGENCY APPROVAL

IDENTIFICATION STAMP DIV. OF THE STATE ARCHITECT
02 116495
DATE 12-18-2017

ORIGINAL PC STATE AGENCY APPROVAL

IDENTIFICATION STAMP DIV. OF THE STATE ARCHITECT CA. DEPT. OF GENERAL SERVICES
PC 02-113921 REV. 1
AC FLS SS
DATE 10/5/2015

PRE-CHECK (PC) DOCUMENT – CODE: 2013 CBC
A SEPARATE PROJECT APPLICATION FOR CONSTRUCTION IS REQUIRED

REVISIONS
1
2
3
4

DRAWN BY:
SCALE: AS NOTED
DATE:

SHEET NUMBER

A2.0

02-113921 - 30x32 EXPOSED STEEL SMED 8/7/2015 10:46 AM PLOTTED 9/24/2015 9:16 AM

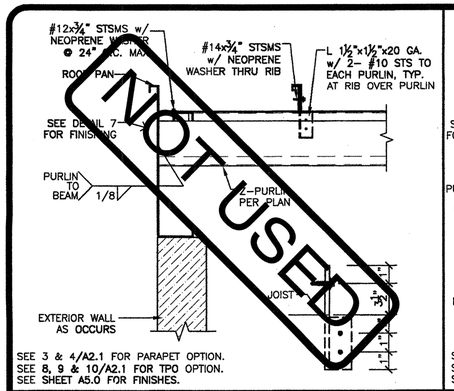

SEE 3 & 4/A2.1 FOR PARAPET OPTION.
SEE 8, 9 & 10/A2.1 FOR TPO OPTION.
SEE SHEET A5.0 FOR FINISHES.

METAL ROOF w/ STRAPS SCALE : 1 1/2"=1'-0" | 1

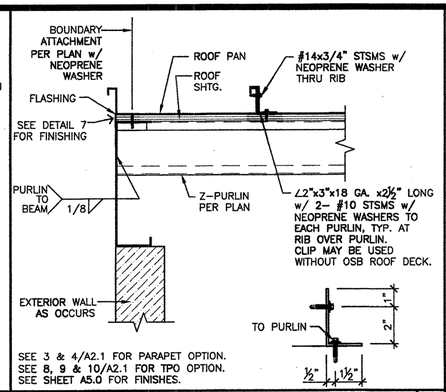

SEE 3 & 4/A2.1 FOR PARAPET OPTION.
SEE 8, 9 & 10/A2.1 FOR TPO OPTION.
SEE SHEET A5.0 FOR FINISHES.

METAL ROOF w/ DECKING SCALE : 1 1/2"=1'-0" | 2

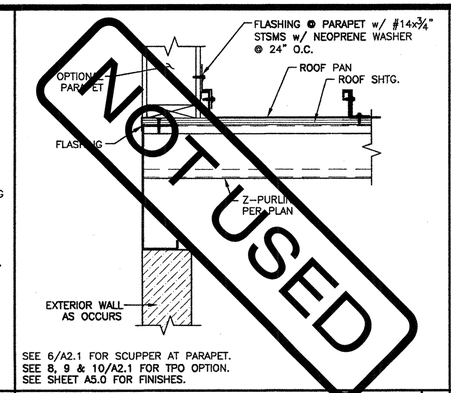

SEE 6/A2.1 FOR SCUPPER AT PARAPET.
SEE 8, 9 & 10/A2.1 FOR TPO OPTION.
SEE SHEET A5.0 FOR FINISHES.

OPTIONAL PARAPET @ METAL ROOF SIDE SCALE : 1 1/2"=1'-0" | 3

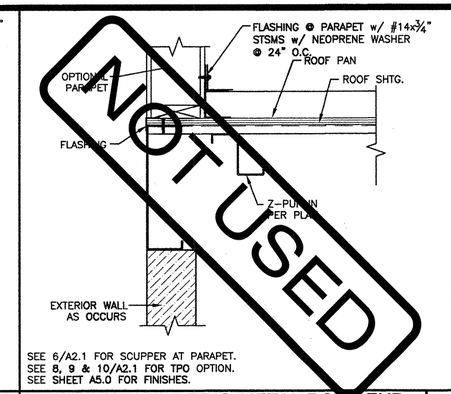

SEE 6/A2.1 FOR SCUPPER AT PARAPET.
SEE 8, 9 & 10/A2.1 FOR TPO OPTION.
SEE SHEET A5.0 FOR FINISHES.

OPTIONAL PARAPET @ METAL ROOF END SCALE : 1 1/2"=1'-0" | 4

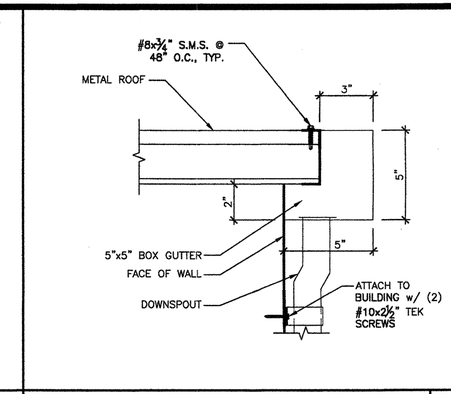

TYP. GUTTER ATTACHMENT SCALE : 1 1/2"=1'-0" | 5

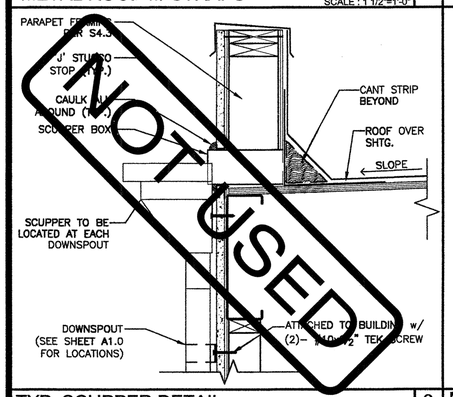

TYP. SCUPPER DETAIL SCALE : 1 1/2"=1'-0" | 6

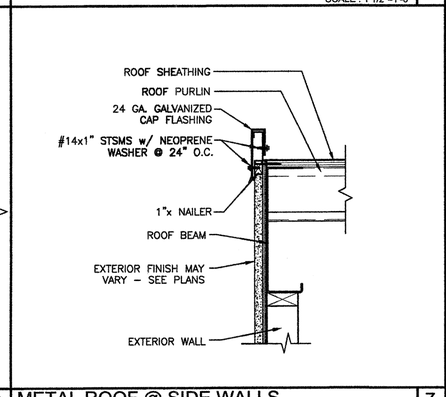

METAL ROOF @ SIDE WALLS SCALE : 1 1/2"=1'-0" | 7

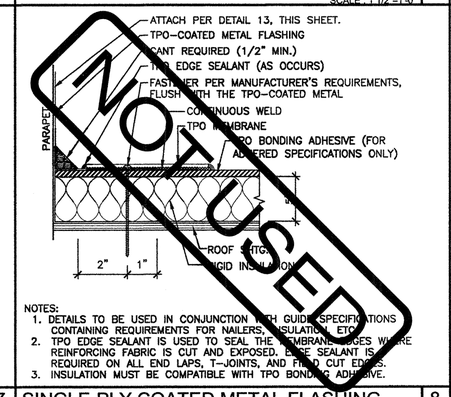

NOTES:
1. DETAILS TO BE USED IN CONJUNCTION WITH GUIDE SPECIFICATIONS CONTAINING REQUIREMENTS FOR NAILERS, INSULATION, ETC.
2. TPO EDGE SEALANT IS USED TO SEAL THE MEMBRANE EDGES WHERE REINFORCING FABRIC IS CUT AND EXPOSED. EDGE SEALANT IS REQUIRED ON ALL END LAPS, T–JOINTS, AND FIELD CUT EDGES.
3. INSULATION MUST BE COMPATIBLE WITH TPO BONDING ADHESIVE.

SINGLE-PLY COATED METAL FLASHING N.T.S. | 8

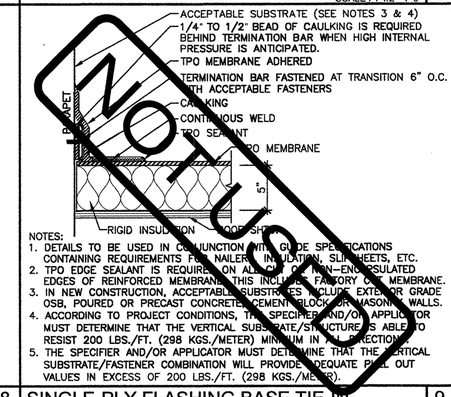

NOTES:
1. DETAILS TO BE USED IN CONJUNCTION WITH GUIDE SPECIFICATIONS CONTAINING REQUIREMENTS FOR NAILERS, INSULATION, SLIP SHEETS, ETC.
2. TPO EDGE SEALANT IS REQUIRED ON ALL CUT OR NON–ENCAPSULATED EDGES OF REINFORCED MEMBRANE. THIS INCLUDES FACTORY CUT MEMBRANE.
3. IN NEW CONSTRUCTION, ACCEPTABLE SUBSTRATES INCLUDE EXTERIOR GRADE OSB, POURED OR PRECAST CONCRETE, CEMENT BLOCK OR MASONRY WALLS.
4. ACCORDING TO PROJECT CONDITIONS, THE SPECIFIER AND/OR APPLICATOR MUST DETERMINE THAT THE VERTICAL SUBSTRATE/STRUCTURE IS ABLE TO RESIST 200 LBS./FT. (298 KGS./METER) MINIMUM IN ALL DIRECTIONS.
5. THE SPECIFIER AND/OR APPLICATOR MUST DETERMINE THAT THE VERTICAL SUBSTRATE/FASTENER COMBINATION WILL PROVIDE ADEQUATE PULL OUT VALUES IN EXCESS OF 200 LBS./FT. (298 KGS./METER).

SINGLE-PLY FLASHING BASE TIE-IN N.T.S. | 9

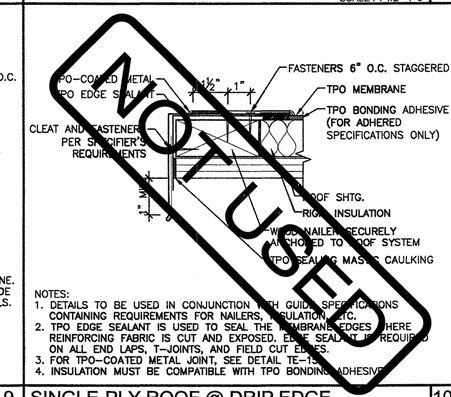

NOTES:
1. DETAILS TO BE USED IN CONJUNCTION WITH GUIDE SPECIFICATIONS CONTAINING REQUIREMENTS FOR NAILERS, INSULATION, ETC.
2. TPO EDGE SEALANT IS USED TO SEAL THE MEMBRANE EDGES WHERE REINFORCING FABRIC IS CUT AND EXPOSED. EDGE SEALANT IS REQUIRED ON ALL END LAPS, T–JOINTS, AND FIELD CUT EDGES.
3. FOR TPO–COATED METAL JOINT, SEE DETAIL TE–15.
4. INSULATION MUST BE COMPATIBLE WITH TPO BONDING ADHESIVE.

SINGLE-PLY ROOF @ DRIP EDGE N.T.S. | 10

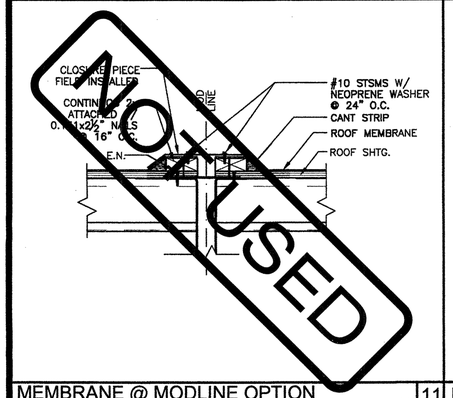

MEMBRANE @ MODLINE OPTION SCALE: 1-1/2"=1'-0" | 11

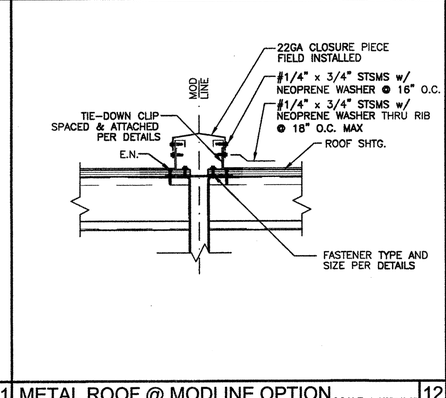

METAL ROOF @ MODLINE OPTION SCALE: 1-1/2"=1'-0" | 12

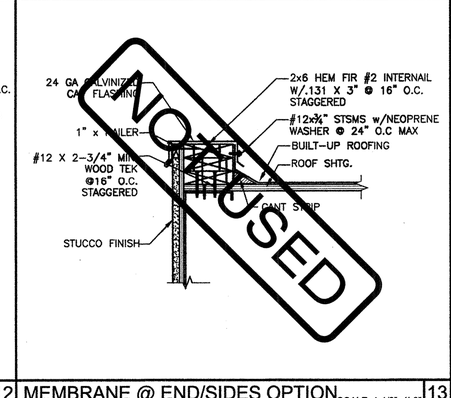

MEMBRANE @ END/SIDES OPTION SCALE: 1-1/2"=1'-0" | 13

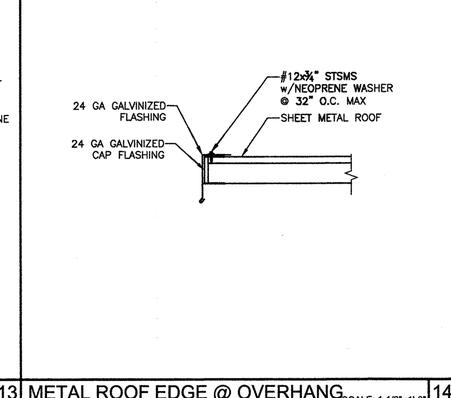

METAL ROOF EDGE @ OVERHANG SCALE: 1-1/2"=1'-0" | 14

NOT USED | 15

NOT USED | 16

NOT USED | 17

NOT USED | 18

NOT USED | 19

NOT USED | 20

AMS
American Modular Systems
787 Spreckels Ave.Manteca, CA 95336
Phone (209) 825-1921 - Fax (209) 825-7018
americanmodular.com

MODULAR MANUFACTURER PROPRIETARY STATEMENT

THESE DRAWINGS AND THE MATERIAL CONTAINED THEREIN ARE THE PROPERTY OF AMERICAN MODULAR SYSTEMS, INC. (AMS) AND SHALL NOT BE REPRODUCED, COPIED OR OTHERWISE DISPOSED OF DIRECTLY OR INDIRECTLY AND SHALL NOT BE USED IN WHOLE OR IN PART TO ASSIST IN THE MAKING OF OR FOR THE PURPOSE OF FURNISHING ANY INFORMATION FOR THE MAKING OF DRAWINGS, PRINTS, APPARATUS OR PARTS THEREOF WITHOUT THE FULL KNOWLEDGE AND WRITTEN CONSENT OF AMS. ALL PATENTABLE MATERIAL CONTAINED HEREIN AND ORIGINATING WITH AMS SHALL BE THE SOLE PROPERTY OF AMS.

PRE–CHECKED SET NAME

30' x 32' THRU 150' x 32' BUILDINGS

SITE SPECIFIC PROJECT NAME

SHEET TITLE

ROOF DETAILS

MANUFACTURER PROFESSIONAL OF RECORD ON PC

LICENSED ARCHITECT — BRADLEY PATRICK ADAMSON — No. C12631 Ren. 03-31-17 — STATE OF CALIFORNIA

PROJECT SPECIFIC STATE AGENCY APPROVAL

IDENTIFICATION STAMP DIV. OF THE STATE ARCHITECT
OS # 11 6495
AC TM
DATE 12-18-2017

ORIGINAL PC STATE AGENCY APPROVAL

IDENTIFICATION STAMP
DIV. OF THE STATE ARCHITECT
CA. DEPT. OF GENERAL SERVICES
PC 02-113921
AC APPROVED
DATE 6/19/2015

PRE–CHECK (PC) DOCUMENT – CODE: 2013 CBC
A SEPARATE PROJECT APPLICATION FOR CONSTRUCTION IS REQUIRED

REVISIONS
1
2
3
4

DRAWN BY:
SCALE: AS NOTED
DATE:

SHEET NUMBER

A2.1

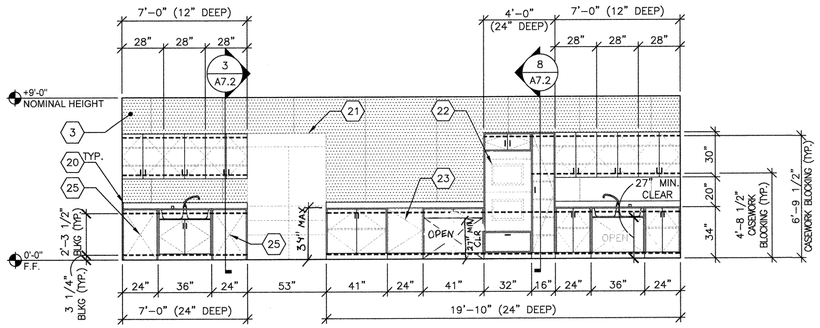

DEMONSTRATION KITCHEN ELEVATION SCALE : 1/4"=1'-0" 1

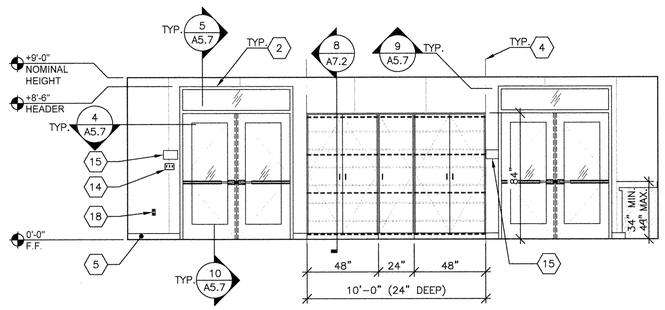

DEMONSTRATION KITCHEN ELEVATION SCALE : 1/4"=1'-0" 2

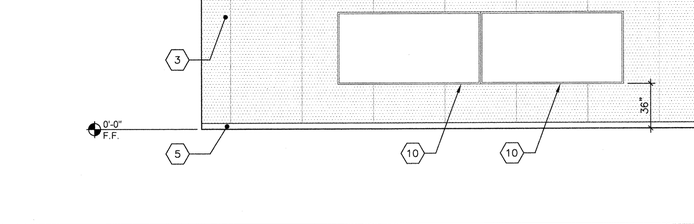

DEMONSTRATION KITCHEN ELEVATION SCALE : 1/4"=1'-0" 3

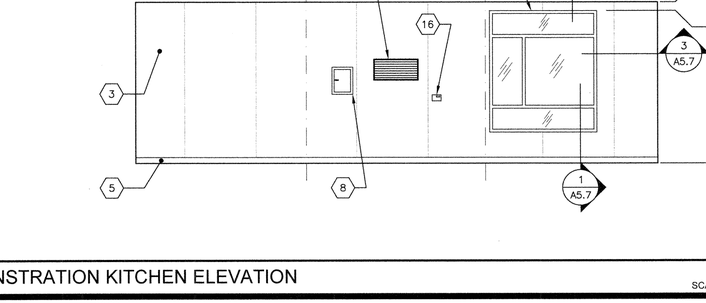

DEMONSTRATION KITCHEN ELEVATION SCALE : 1/4"=1'-0" 4

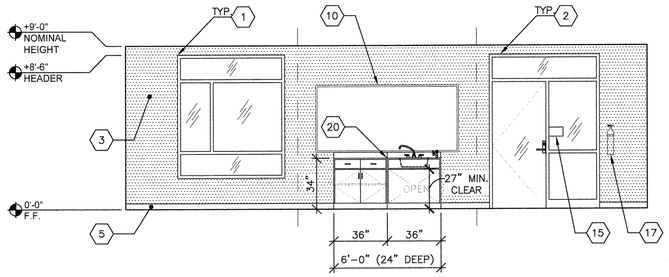

DEMONSTRATION KITCHEN ELEVATION SCALE : 1/4"=1'-0" 5

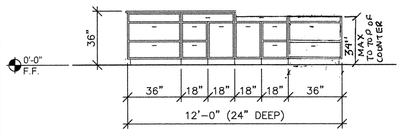

DEMONSTRATION KITCHEN ELEVATION SCALE : 1/4"=1'-0" 6

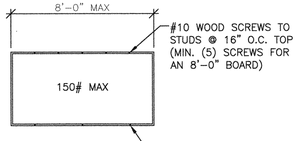

NOTE: ATTACHMENT IS FOR EACH MAKERBOARD

MARKERBOARD ATT. DETAIL 8

DEMONSTRATION KITCHEN ELEVATION SCALE : 1/4"=1'-0" 7

DEMONSTRATION KITCHEN ELEVATION SCALE : 1/4"=1'-0" 9

1. WINDOW SEE SPEC'S
2. TYP. EXTERIOR DOOR
3. VINYL WRAPPED TACKABLE WALLS
4. TYP. MOD LINE
5. TOP SET BASE
6. NOT USED
7. NOT USED
8. ELECTRICAL PANEL – SEE ELECTRICAL SHEETS
9. NOT USED
10. 8'x4' MARKER BOARD (SEE DETAIL 8 THIS SHEET)
11. NOT USED
12. NOT USED
13. NOT USED
14. LIGHT SWITCH SEE ELECTRICAL SHEETS
15. EXIT TACTILE SIGN PER DETAIL 10/N4.0 (NIC)
16. THERMOSTAT, TOP @ 48" A.F.F. – SEE MECHANICAL SHEETS
17. FIRE EXTINGUISHER TOP OF OPERATING HANDLE @ +48" AFF MAX PROTRUSION MAX 4" FROM WALL OR BOTTOM OF FIRE EXTINGUISHER LESS THAN +27" A.F.F
18. TYP DUPLEX OUTLET SEE ELECTRICAL SHEETS
19. HVAC GRILL
20. LAMINATED COUNTER TOP W/ 4" BACKSPLASH
21. REFRIGERATOR (BY OWNER) 50% OF FREEZER SHALL BE 54" MAX ABOVE FLOOR (11B-804.6.6)
22. DOUBLE STACK OVEN (BY OWNER) CONTROLS ON FRONT PANEL NOT TO EXCEED 48" MAX. A.F.F. (11B-804.6.5.2)
23. WINE REFRIGERATOR (BY OWNER)
24. IDF CABINET (BY OWNER)
25. DISH WASHER (BY OWNER)

NOTE: FULL PANEL CLOSE UP AT MOD. LINE

KEY NOTES

American Modular Systems
787 Spreckels Ave. Manteca, CA 95336
Phone (209) 825-1921 - Fax (209) 825-7018
americanmodular.com

MODULAR MANUFACTURER PROPRIETARY STATEMENT

THESE DRAWINGS AND THE MATERIAL CONTAINED THEREIN ARE THE PROPERTY OF AMERICAN MODULAR SYSTEMS, INC. (AMS) AND SHALL NOT BE REPRODUCED, COPIED OR OTHERWISE DISPOSED OF DIRECTLY OR INDIRECTLY AND SHALL NOT BE USED IN WHOLE OR IN PART TO ASSIST IN THE MAKING OF OR FOR THE PURPOSE OF FURNISHING ANY INFORMATION FOR THE MAKING OF DRAWINGS, PRINTS, APPARATUS OR PARTS THEREOF WITHOUT THE FULL KNOWLEDGE AND WRITTEN CONSENT OF AMS. ALL PATENTABLE MATERIAL CONTAINED HEREIN AND ORIGINATING WITH AMS SHALL BE THE SOLE PROPERTY OF AMS.

PRE-CHECKED SET NAME

30' x 32' THRU 150' x 32' BUILDINGS

SITE SPECIFIC PROJECT NAME

MARIN COMMUNITY CSD - INDIAN VALLEY CAMPUS 60x32 BUILDING

SHEET TITLE

INTERIOR ELEVATIONS

MANUFACTURER PROFESSIONAL OF RECORD ON PC

LICENSED ARCHITECT TIMOTHY PATRICK COMMANE No. C12631 Ren. 3-31-19 STATE OF CALIFORNIA

PROJECT SPECIFIC STATE AGENCY APPROVAL

IDENTIFICATION STAMP DIV. OF THE STATE ARCHITECT 02 II 6495 DATE 12-18-2017

ORIGINAL PC STATE AGENCY APPROVAL

BASED ON PC# 02-113921
PRE-CHECK (PC) DOCUMENT ~ CODE: 2013 CBC
A SEPARATE PROJECT APPLICATION FOR CONSTRUCTION IS REQUIRED

REVISIONS

DRAWN BY:	BA
SCALE:	AS NOTED
DATE:	11/10/17

SHEET NUMBER

A4.0

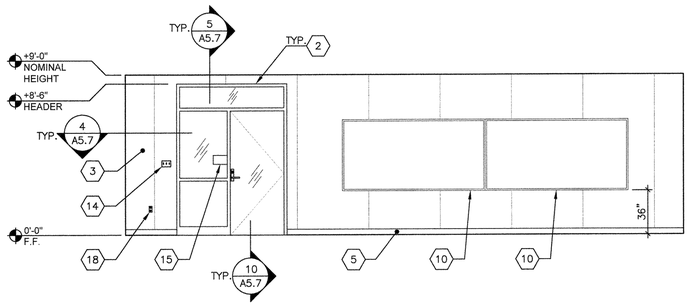

CLASSROOM ELEVATION — SCALE : 1/4"=1'-0" — 1

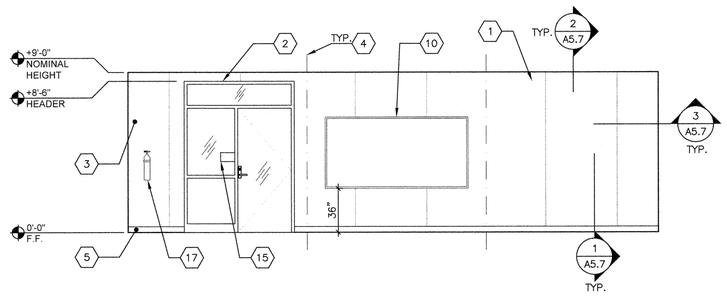

CLASSROOM ELEVATION — SCALE : 1/4"=1'-0" — 2

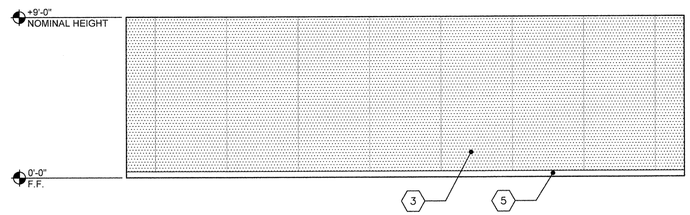

CLASSROOM ELEVATION — SCALE : 1/4"=1'-0" — 3

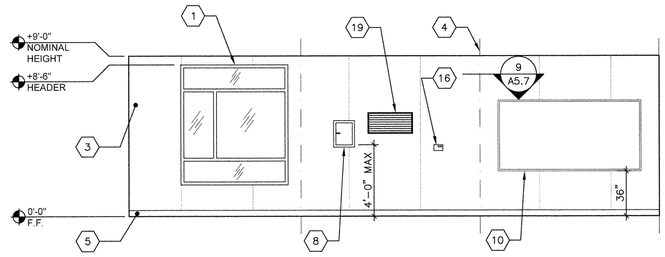

CLASSROOM ELEVATION — SCALE : 1/4"=1'-0" — 4

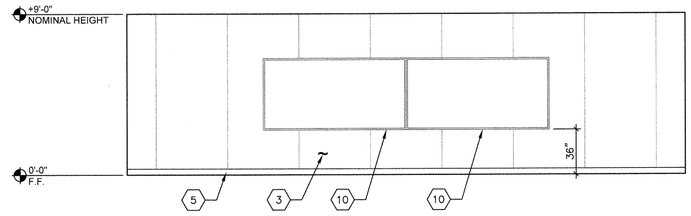

CLASSROOM ELEVATION — SCALE : 1/4"=1'-0" — 5

NOT USED — SCALE : 1/4"=1'-0" — 6

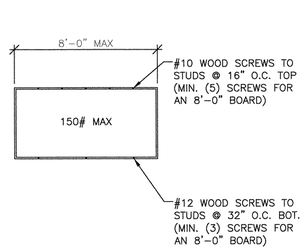

NOTE: ATTACHMENT IS FOR EACH MAKERBOARD

MARKERBOARD ATT. DETAIL — 8

NOT USED — SCALE : 1/4"=1'-0" — 7

NOT USED — SCALE : 1/4"=1'-0" — 9

1. WINDOW SEE SPEC'S
2. TYP. EXTERIOR DOOR
3. VINYL WRAPPED TACKABLE WALLS
4. TYP. MOD LINE
5. TOP SET BASE
6. NOT USED
7. NOT USED
8. ELECTRICAL PANEL – SEE ELECTRICAL SHEETS
9. NOT USED
10. 8'x4' MARKER BOARDS (SEE DETAIL 8 THIS SHEET)
11. NOT USED
12. NOT USED
13. NOT USED
14. LIGHT SWITCH SEE ELECTRICAL SHEETS
15. EXIT TACTILE SIGN PER DETAIL 10/N4.0 (NIC)
16. THERMOSTAT, TOP @ 48" A.F.F. – SEE MECHANICAL SHEETS
17. FIRE EXTINGUISHER TOP OF OPERATING HANDLE @ +48" AFF MAX PROTRUSION MAX 4" FROM WALL OR BOTTOM OF FIRE EXTINGUISHER LESS THAN +27" A.F.F
18. TYP DUPLEX OUTLET SEE ELECTRICAL SHEETS
19. HVAC GRILL

NOTE: FULL PANEL CLOSE UP AT MOD. LINE

KEY NOTES

American Modular Systems
787 Spreckels Ave. Manteca, CA 95336
Phone (209) 825-1921 - Fax (209) 825-7018
americanmodular.com

MODULAR MANUFACTURER PROPRIETARY STATEMENT

THESE DRAWINGS AND THE MATERIAL CONTAINED THEREIN ARE THE PROPERTY OF AMERICAN MODULAR SYSTEMS, INC. (AMS) AND SHALL NOT BE REPRODUCED, COPIED OR OTHERWISE DISPOSED OF DIRECTLY OR INDIRECTLY AND SHALL NOT BE USED IN WHOLE OR IN PART TO ASSIST IN THE MAKING OF OR FOR THE PURPOSE OF FURNISHING ANY INFORMATION FOR THE MAKING OF DRAWINGS, PRINTS, APPARATUS OR PARTS THEREOF WITHOUT THE FULL KNOWLEDGE AND WRITTEN CONSENT OF AMS. ALL PATENTABLE MATERIAL CONTAINED HEREIN AND ORIGINATING WITH AMS SHALL BE THE SOLE PROPERTY OF AMS.

PRE-CHECKED SET NAME

30' x 32' THRU 150' x 32' BUILDINGS

SITE SPECIFIC PROJECT NAME

MARIN COMMUNITY CSD - INDIAN VALLEY CAMPUS 60x32 BUILDING

SHEET TITLE

INTERIOR ELEVATIONS

MANUFACTURER PROFESSIONAL OF RECORD ON PC

LICENSED ARCHITECT — TIMOTHY PATRICK DONAHUE — No. C12631 Ren. 3-31-19 — STATE OF CALIFORNIA

PROJECT SPECIFIC STATE AGENCY APPROVAL

IDENTIFICATION STAMP DIV. OF THE STATE ARCHITECT
02 11 6495
AC TM
DATE 12-18-2017

ORIGINAL PC STATE AGENCY APPROVAL

BASED ON PC# 02-113921

PRE-CHECK (PC) DOCUMENT ~ CODE: 2013 CBC
A SEPARATE PROJECT APPLICATION FOR CONSTRUCTION IS REQUIRED

REVISIONS

DRAWN BY:	BA
SCALE:	AS NOTED
DATE:	11/10/17

SHEET NUMBER

A4.0A

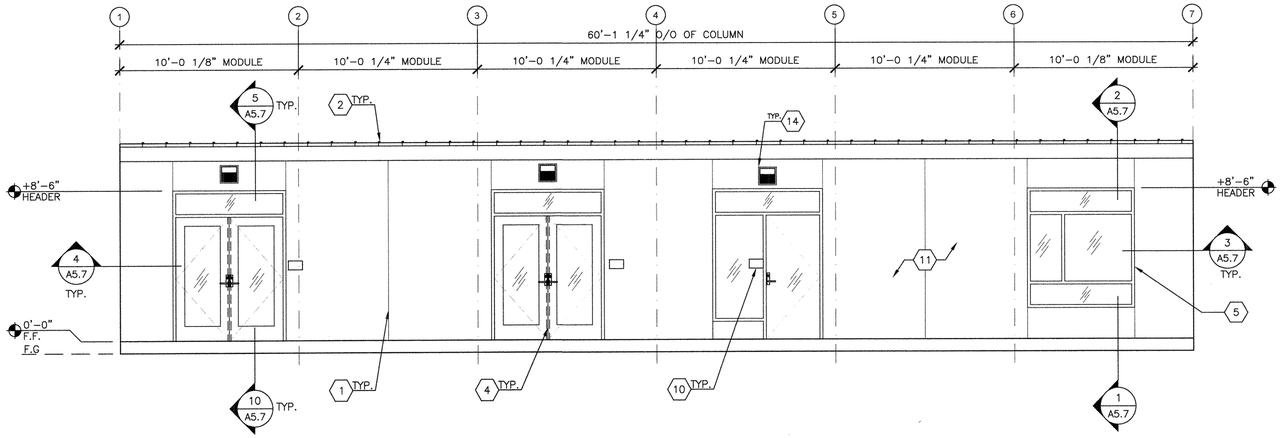

DEMONSTRATION KITCHEN FRONT ELEVATION — SCALE: 1/4" = 1'-0" | 1

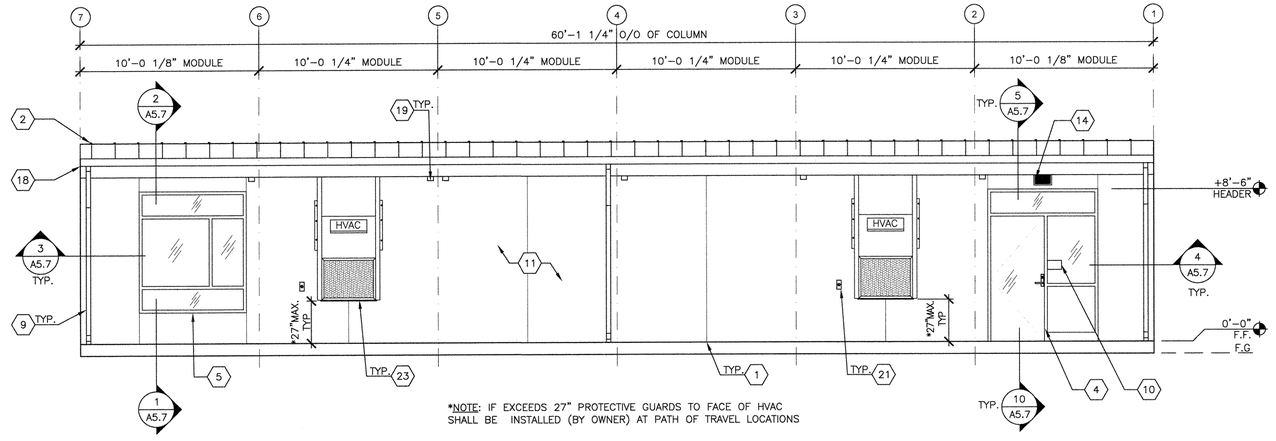

*NOTE: IF EXCEEDS 27" PROTECTIVE GUARDS TO FACE OF HVAC SHALL BE INSTALLED (BY OWNER) AT PATH OF TRAVEL LOCATIONS

DEMONSTRATION KITCHEN REAR ELEVATION — SCALE: 1/4" = 1'-0" | 2

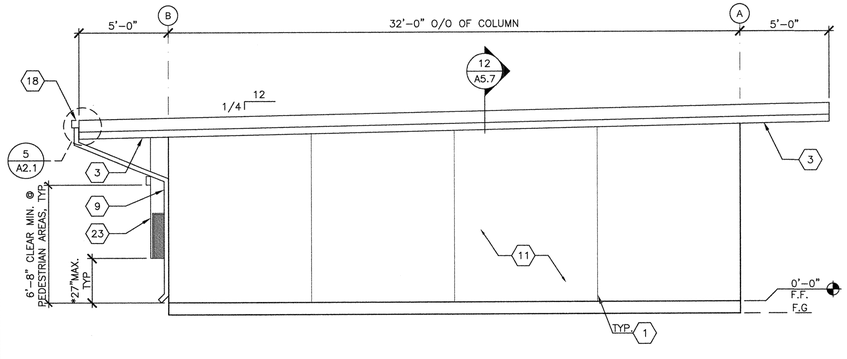

*NOTE: IF EXCEEDS 27" PROTECTIVE GUARDS TO FACE OF HVAC SHALL BE INSTALLED (BY OWNER) AT PATH OF TRAVEL LOCATIONS

DEMONSTRATION KITCHEN LEFT ELEVATION — SCALE: 3/8" = 1'-0" | 3

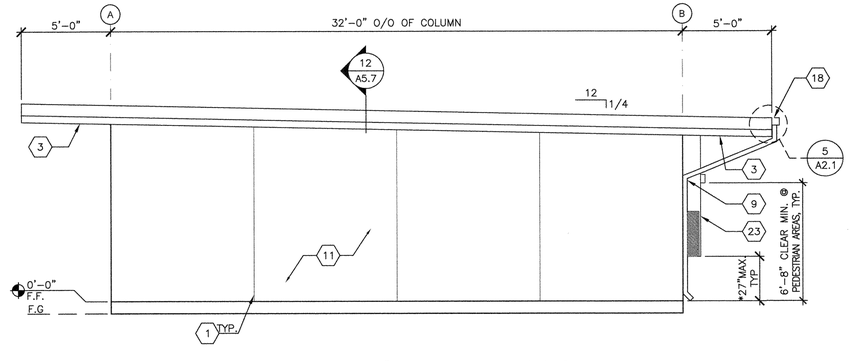

*NOTE: IF EXCEEDS 27" PROTECTIVE GUARDS TO FACE OF HVAC SHALL BE INSTALLED (BY OWNER) AT PATH OF TRAVEL LOCATIONS

DEMONSTRATION KITCHEN RIGHT ELEVATION — SCALE: 3/8" = 1'-0" | 4

1. CONTROL JOINT (LOCATION MAY VARY)
2. STANDING SEAM METAL ROOFING
3. OVERHANG – SEE STRUCTURAL
4. TYP. EXTERIOR DOOR – SEE SCHEDULE
5. WINDOW – SEE SCHEDULE
6. NOT USED
7. NOT USED
8. NOT USED
9. DOWNSPOUT SEE DETAIL 5/A2.1 FOR ATTACHMENT
10. ROOM ID AND ISA SIGNAGE (BY OTHER) SEE DETAILS 5 & 9/N4.0 – TYP..
11. ACRYLIC TEXTURED FINISH OVER HARDI-BOARD
12. NOT USED
13. NOT USED
14. EXTERIOR LIGHT – SEE ELECTRICAL
15. NOT USED
16. NOT USED
17. NOT USED
18. GUTTER – SEE SHEET 5/A2.1
19. MODULAR IDENTIFICATION TAG +90" ABOVE AFF
20. NOT USED
21. WP/G.F.C.I. @ HVAC UNITS – REFER TO ELECTRICAL PLAN
22. NOT USED
23. HVAC UNIT

WU WILD URBAN INTERFACE:

1. ROOFING IS CLASS "B".
2. EXTERIOR WALL COVERING WILL BE NON-COMBUSTIBLE.
3. OVERHANGS ARE CONSTRUCTED OF NON COMBUSTIBLE MATERIAL.
4. CONCRETE FOUNDATION.
5. EXTERIOR DOOR FRAMES WILL HAVE DUAL TEMPERED GLASS
6. EXTERIOR DOORS HAVE A FIRE RESISTANCE OF NOT LESS THAN 20 MIN.
7. ROOF GUTTERS HAVE A CONDITION SCREEN WITH OPENING NOT EXCEEDING 1/8" TO 1/4".
8. EXTERIOR WINDOWS TO BE DUAL PANE W/ EXTERIOR PANE TEMPERED PER 708A.2
9. ALL EAVES TO BE FULLY ENCLOSED W/ INSULATION, NO VENTING.

KEYNOTES

AMS® American Modular Systems
787 Spreckels Ave. Manteca, CA 95336
Phone (209) 825-1921 - Fax (209) 825-7018
americanmodular.com

MODULAR MANUFACTURER PROPRIETARY STATEMENT

THESE DRAWINGS AND THE MATERIAL CONTAINED THEREIN ARE THE PROPERTY OF AMERICAN MODULAR SYSTEMS, INC. (AMS) AND SHALL NOT BE REPRODUCED, COPIED OR OTHERWISE DISPOSED OF DIRECTLY OR INDIRECTLY AND SHALL NOT BE USED IN WHOLE OR IN PART TO ASSIST IN THE MAKING OF OR FOR THE PURPOSE OF FURNISHING ANY INFORMATION FOR THE MAKING OF DRAWINGS, PRINTS, APPARATUS OR PARTS THEREOF WITHOUT THE FULL KNOWLEDGE AND WRITTEN CONSENT OF AMS. ALL PATENTABLE MATERIAL CONTAINED HEREIN AND ORIGINATING WITH AMS SHALL BE THE SOLE PROPERTY OF AMS.

PRE-CHECKED SET NAME

30' x 32' THRU 150' x 32' BUILDINGS

SITE SPECIFIC PROJECT NAME

MARIN COMMUNITY CSD - INDIAN VALLEY CAMPUS 60x32 BUILDING

SHEET TITLE

DEMONSTRATION KITCHEN EXTERIOR ELEVATIONS SYNTHETIC STUCCO OPTION

MANUFACTURER PROFESSIONAL OF RECORD ON PC

LICENSED ARCHITECT PATRICK CRAWFORD No. C12631 Ren. 3-31-19 STATE OF CALIFORNIA

PROJECT SPECIFIC STATE AGENCY APPROVAL

IDENTIFICATION STAMP DIV. OF THE STATE ARCHITECT OS# 116495 DATE 12-18-2017

ORIGINAL PC STATE AGENCY APPROVAL

BASED ON PC# 02-113921

PRE-CHECK (PC) DOCUMENT – CODE: 2013 CBC
A SEPARATE PROJECT APPLICATION FOR CONSTRUCTION IS REQUIRED

REVISIONS

1	
2	
3	
4	

DRAWN BY:	BA
SCALE:	AS NOTED
DATE:	11/10/17

SHEET NUMBER

A5.6

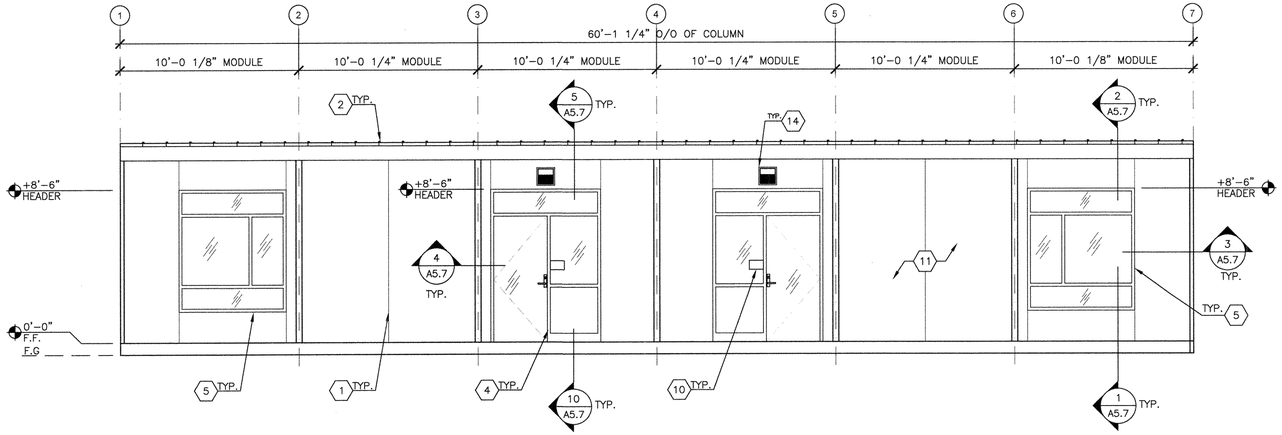

CLASSROOM FRONT ELEVATION — SCALE: 1/4" = 1'-0" | 1

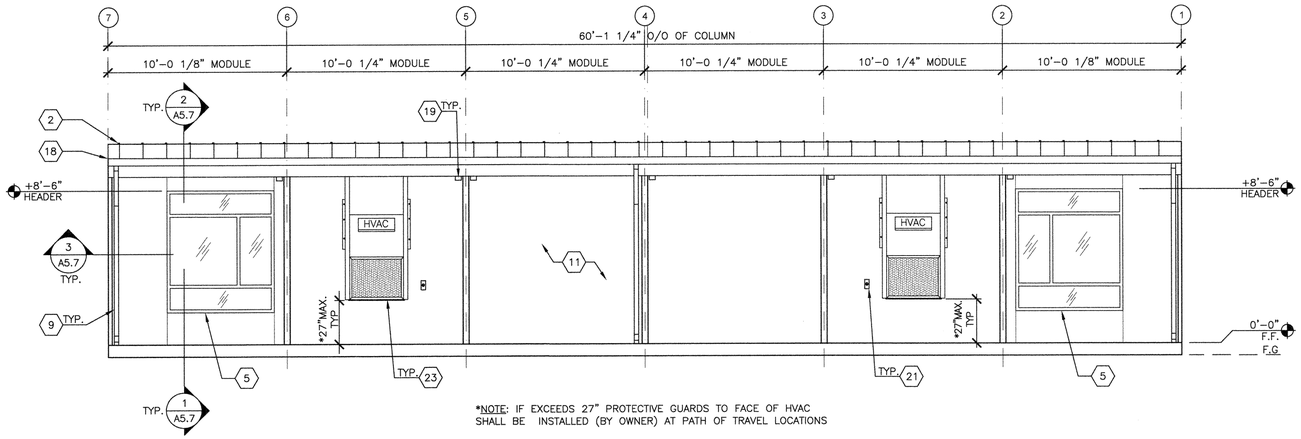

*NOTE: IF EXCEEDS 27" PROTECTIVE GUARDS TO FACE OF HVAC SHALL BE INSTALLED (BY OWNER) AT PATH OF TRAVEL LOCATIONS

CLASSROOM REAR ELEVATION — SCALE: 1/4" = 1'-0" | 2

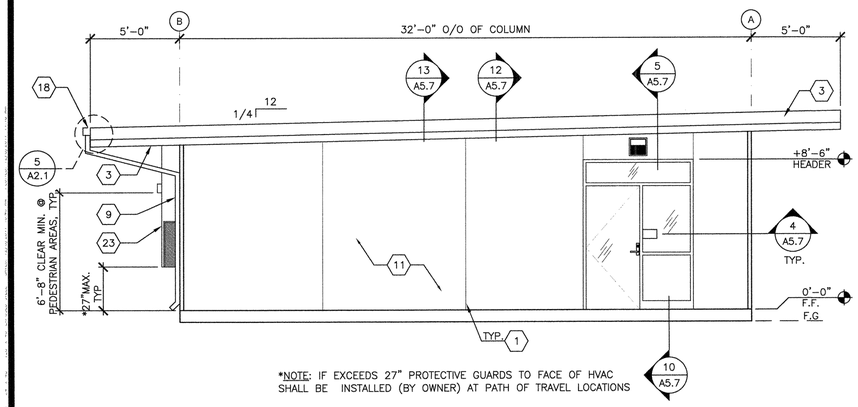

*NOTE: IF EXCEEDS 27" PROTECTIVE GUARDS TO FACE OF HVAC SHALL BE INSTALLED (BY OWNER) AT PATH OF TRAVEL LOCATIONS

CLASSROOM LEFT ELEVATION — SCALE: 3/8" = 1'-0" | 3

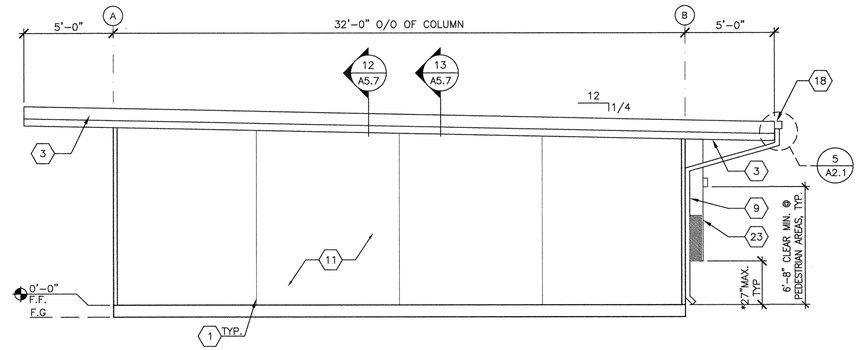

*NOTE: IF EXCEEDS 27" PROTECTIVE GUARDS TO FACE OF HVAC SHALL BE INSTALLED (BY OWNER) AT PATH OF TRAVEL LOCATIONS

CLASSROOM RIGHT ELEVATION — SCALE: 3/8" = 1'-0" | 4

1. CONTROL JOINT
2. STANDING SEAM METAL ROOFING
3. OVERHANG – SEE STRUCTURAL
4. TYP. EXTERIOR DOOR – SEE SCHEDULE
5. WINDOW – SEE SCHEDULE
6. NOT USED
7. NOT USED
8. NOT USED
9. DOWNSPOUT SEE DETAIL 5/A2.1 FOR ATTACHMENT
10. ROOM ID AND ISA SIGNAGE (BY OTHER) SEE DETAILS 5 & 9/N4.0 – TYP..
11. ACRYLIC TEXTURED FINISH OVER HARDI-BOARD
12. NOT USED
13. NOT USED
14. EXTERIOR LIGHT – SEE ELECTRICAL
15. NOT USED
16. NOT USED
17. NOT USED
18. GUTTER – SEE SHEET 5/A2.1
19. MODULAR IDENTIFICATION TAG +90" ABOVE AFF
20. NOT USED
21. WP/G.F.C.I. @ HVAC UNITS – REFER TO ELECTRICAL PLAN
22. NOT USED
23. HVAC UNIT

WU WILD URBAN INTERFACE:

1. ROOFING IS CLASS "B".
2. EXTERIOR WALL COVERING WILL BE NON-COMBUSTIBLE.
3. OVERHANGS ARE CONSTRUCTED OF NON COMBUSTIBLE MATERIAL.
4. CONCRETE FOUNDATION.
5. EXTERIOR DOOR FRAMES WILL HAVE DUAL TEMPERED GLASS
6. EXTERIOR DOORS HAVE A FIRE RESISTANCE OF NOT LESS THAN 20 MIN.
7. ROOF GUTTERS HAVE A CONDITION SCREEN WITH OPENING NOT EXCEEDING 1/8" TO 1/8".
8. EXTERIOR WINDOWS TO BE DUAL PANE W/ EXTERIOR PANE TEMPERED PER 708A.2
9. ALL EAVES TO BE FULLY ENCLOSED W/ INSULATION, NO VENTING.

KEYNOTES

AMS® American Modular Systems
787 Spreckels Ave. Manteca, CA 95336
Phone (209) 825-1921 - Fax (209) 825-7018
americanmodular.com

MODULAR MANUFACTURER PROPRIETARY STATEMENT

THESE DRAWINGS AND THE MATERIAL CONTAINED THEREIN ARE THE PROPERTY OF AMERICAN MODULAR SYSTEMS, INC. (AMS) AND SHALL NOT BE REPRODUCED, COPIED OR OTHERWISE DISPOSED OF DIRECTLY OR INDIRECTLY AND SHALL NOT BE USED IN WHOLE OR IN PART TO ASSIST IN THE MAKING OF OR FOR THE PURPOSE OF FURNISHING ANY INFORMATION FOR THE MAKING OF DRAWINGS, PRINTS, APPARATUS OR PARTS THEREOF WITHOUT THE FULL KNOWLEDGE AND WRITTEN CONSENT OF AMS. ALL PATENTABLE MATERIAL CONTAINED HEREIN AND ORIGINATING WITH AMS SHALL BE THE SOLE PROPERTY OF AMS.

PRE-CHECKED SET NAME

30' x 32' THRU 150' x 32' BUILDINGS

SITE SPECIFIC PROJECT NAME

MARIN COMMUNITY CSD - INDIAN VALLEY CAMPUS 60x32 BUILDING

SHEET TITLE

CLASSROOM EXTERIOR ELEVATIONS SYNTHETIC STUCCO OPTION

MANUFACTURER PROFESSIONAL OF RECORD ON PC

LICENSED ARCHITECT — PATRICK CARNEY — No. C12631 Ren. 3-31-19 — STATE OF CALIFORNIA

PROJECT SPECIFIC STATE AGENCY APPROVAL

IDENTIFICATION STAMP DIV. OF THE STATE ARCHITECT
02 II 6495
AC TM TH JBS
DATE 12-18-2017

ORIGINAL PC STATE AGENCY APPROVAL

BASED ON PC# 02-113921

PRE-CHECK (PC) DOCUMENT – CODE: 2013 CBC
A SEPARATE PROJECT APPLICATION FOR CONSTRUCTION IS REQUIRED

REVISIONS

DRAWN BY:	BA
SCALE:	AS NOTED
DATE:	11/10/17

SHEET NUMBER

A5.6A

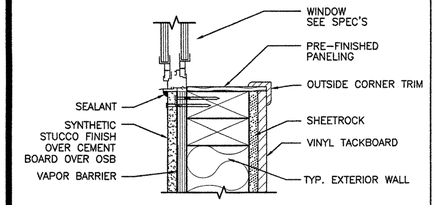

TYP. WINDOW SILL DETAIL SCALE: 3"=1'-0" | 1

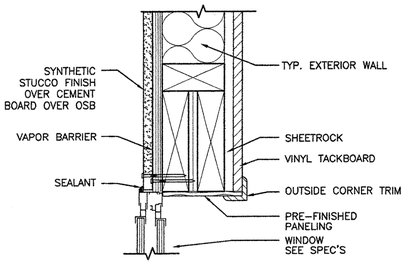

TYP. WINDOW HEADER DETAIL SCALE: 3"=1'-0" | 2

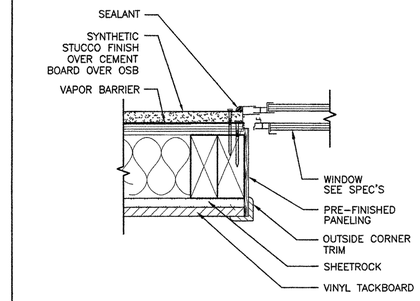

TYP. WINDOW JAMB DETAIL SCALE: 3"=1'-0" | 3

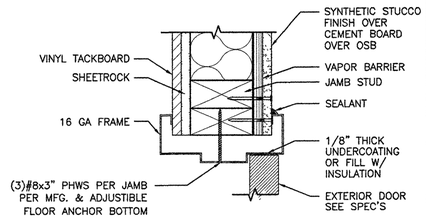

TYP. DOOR JAMB DETAIL SCALE: 3"=1'-0" | 4

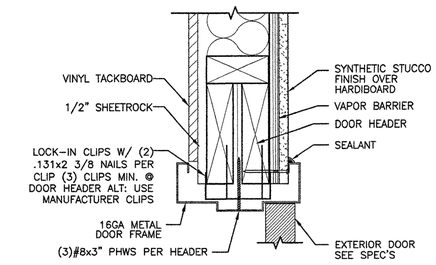

TYP. DOOR HEADER DETAIL SCALE: 3"=1'-0" | 5

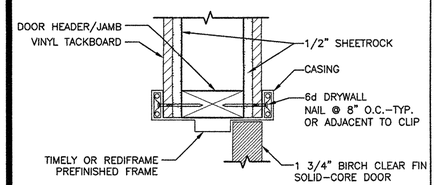

TYP. INTERIOR DOOR HEADER DET. SCALE: 3"=1'-0" | 6

NOT USED | 7

OPTIONAL HYBRID ACRYLIC STUCCO FINISH DOES NOT REQUIRE OSB

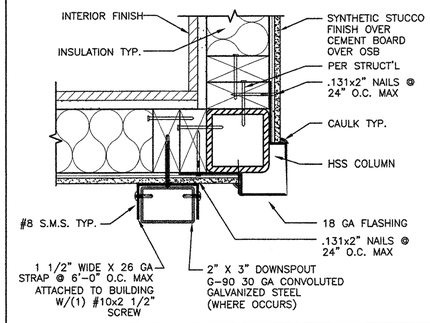

DOWNSPOUT ATTACHMENT DETAIL SCALE: 3"=1'-0" | 8

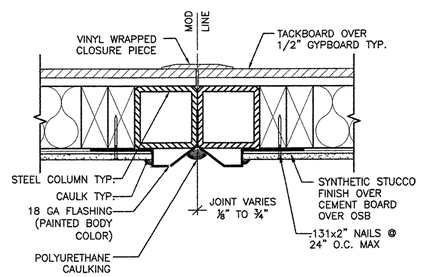

TYP. MODLINE CLOSURE DETAIL SCALE: 3"=1'-0" | 9

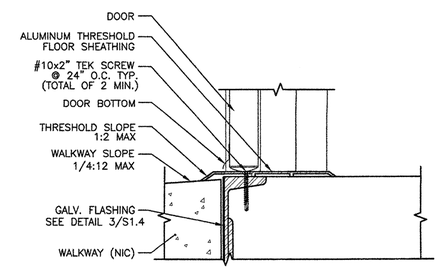

THRESHOLD DETAIL SCALE: 3"=1'-0" | 10

NOT USED | 11

EXTERIOR INTERIOR

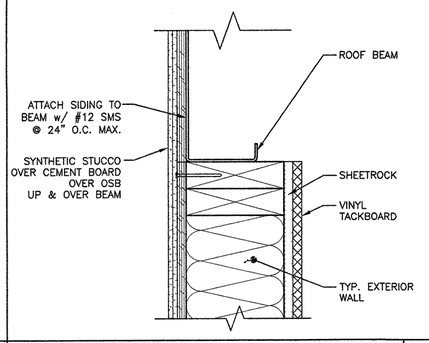

EXTERIOR FINISH @ ROOF BEAM SCALE: 3"=1'-0" | 12

NOT USED | 13

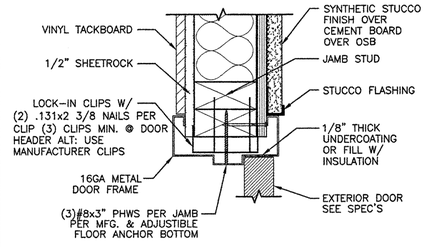

DOOR JAMB OPTION | 14

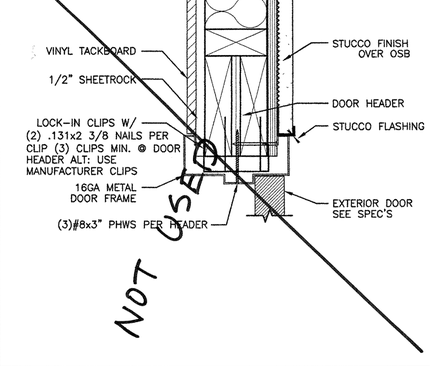

DOOR HEADER OPTION | 15

NOT USED | 16

NOT USED | 17

NOT USED | 18

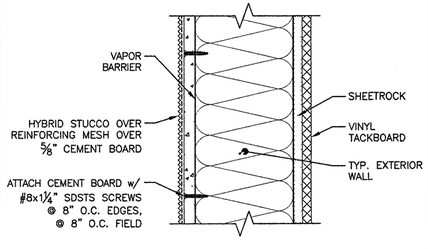

TYP. HYBRID STUCCO FINISH SCALE: 3"=1'-0" | 19

NOTES:

1. FOR OPTIONAL METAL STUD FRAMING SEE S9.0-S9.2
2. ADDITIONAL R-5 RIGID INSULATION REQUIRED @ METAL STUD WALLS SEE SHEET M1.7
3. OPTIONAL HYBRID STUCCO FINISH DOES NOT REQUIRE OSB; SEE 19/A5.7

NOTES

American Modular Systems
787 Spreckels Ave Manteca, CA 95336
Phone (209) 825-1921 - Fax (209) 825-7018
americanmodular.com

MODULAR MANUFACTURER PROPRIETARY STATEMENT

THESE DRAWINGS AND THE MATERIAL CONTAINED THEREIN ARE THE PROPERTY OF AMERICAN MODULAR SYSTEMS, INC. (AMS) AND SHALL NOT BE REPRODUCED, COPIED OR OTHERWISE DISPOSED OF DIRECTLY OR INDIRECTLY AND SHALL NOT BE USED IN WHOLE OR IN PART TO ASSIST IN THE MAKING OF OR FOR THE PURPOSE OF FURNISHING ANY INFORMATION FOR THE MAKING OF DRAWINGS, PRINTS, APPARATUS OR PARTS THEREOF WITHOUT THE FULL KNOWLEDGE AND WRITTEN CONSENT OF AMS. ALL PATENTABLE MATERIAL CONTAINED HEREIN AND ORIGINATING WITH AMS SHALL BE THE SOLE PROPERTY OF AMS.

PRE-CHECKED SET NAME

30' x 32' THRU 150' x 32' BUILDINGS

SITE SPECIFIC PROJECT NAME

SHEET TITLE

ARCHITECTURAL SYNTHETIC STUCCO DETAILS

MANUFACTURER PROFESSIONAL OF RECORD ON PC

LICENSED ARCHITECT — PATRICK CRONIN — No. C12631 Ren. 23-31-17 — STATE OF CALIFORNIA

PROJECT SPECIFIC STATE AGENCY APPROVAL

IDENTIFICATION STAMP DIV. OF THE STATE ARCHITECT
02 ii 6495
AC TM FLS SS
DATE 12-18-2017

ORIGINAL PC STATE AGENCY APPROVAL

IDENTIFICATION STAMP
DIV. OF THE STATE ARCHITECT
CA. DEPT. OF GENERAL SERVICES
PC 02-113921 REV. 1
AC ✓ FLS ✓ SS ✓
DATE 10/5/2015

PRE-CHECK (PC) DOCUMENT - CODE: 2013 CBC
A SEPARATE PROJECT APPLICATION FOR CONSTRUCTION IS REQUIRED

REVISIONS

DRAWN BY:	
SCALE:	AS NOTED
DATE:	

SHEET NUMBER

A5.7

02-113921 - 30x32 - 150x32 EXPOSED STEEL SHEETS M:/2015 11:16 AM PLOTTED 9/24/2015 9:17 AM

NOT USED

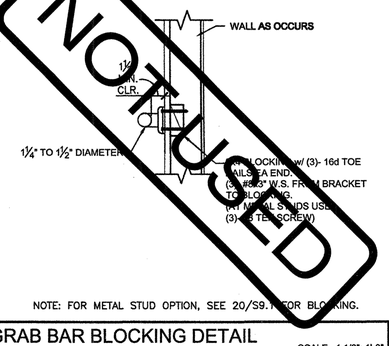

GRAB BAR BLOCKING DETAIL — SCALE : 1 1/2"=1'-0" — 1

NOT USED

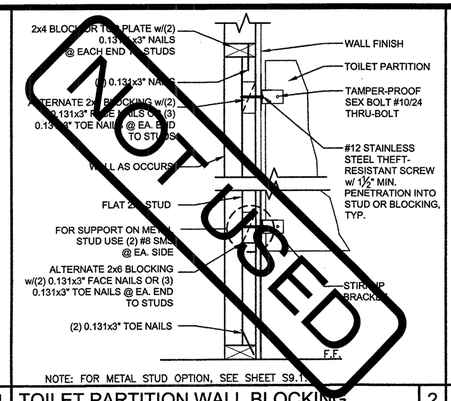

TOILET PARTITION WALL BLOCKING — SCALE: N.T.S. — 2

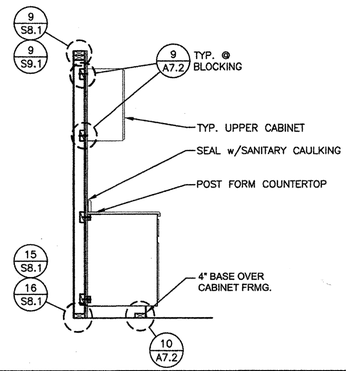

CABINET BLOCKING DETAIL — SCALE: N.T.S. — 3

NOT USED

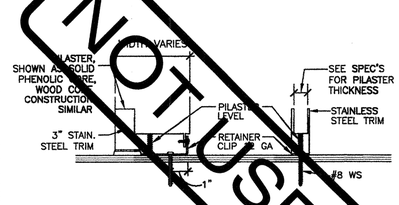

TOILET PARTITION FLOOR BLOCKING WOOD FLOOR — SCALE: N.T.S. — 4

NOT USED

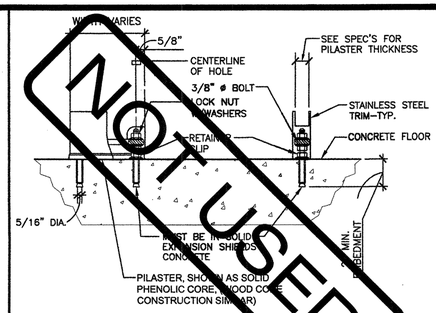

TOILET PARTITION FLOOR BLOCKING CONCRETE FLOOR — SCALE: N.T.S. — 5

NOT USED

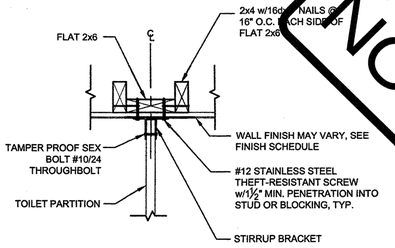

WOOD STUDS OPTION No. 1

NOT USED

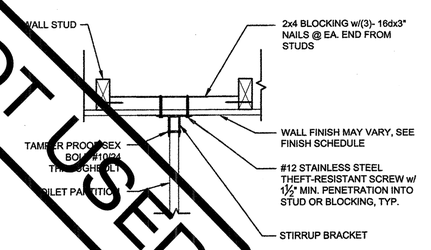

WOOD STUDS OPTION No. 2

TOILET PARTITION ANCHORAGE BLOCKING DETAILS @ WALL — SCALE : 1 1/2"=1'-0" — 6

NOTCH & BORING SCHEDULE					
	STUD WIDTH		NOTCHING	BORING	
SIZE	NOMINAL	ACTUAL	25	25	30
2x4	4"	3½"	1⅜"	1⅜"	1 1/16"
2x6	6"	5½"	1⅜"	1⅜"	1⅝"
2x8	8"	7¼"	1 13/16"	1 13/16"	2 3/16"

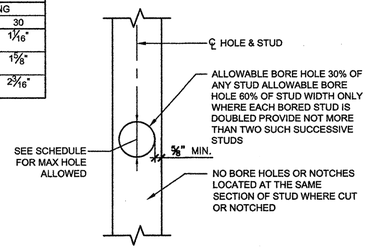

EXTERIOR WALL BORING

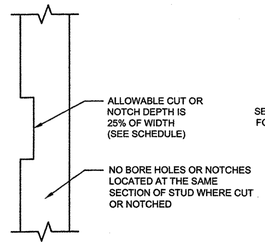

INTERIOR WALL NOTCHING

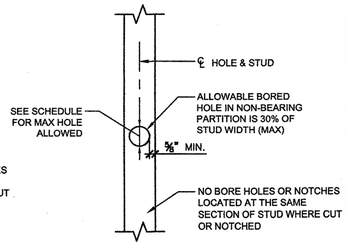

INTERIOR WALL BORING

STUD NOTCHING AND BORING DETAILS — SCALE: N.T.S. — 7

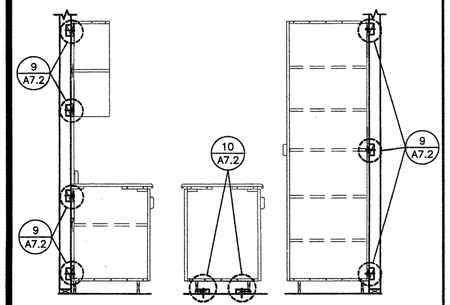

UPPER/BASE CABINET ISLAND CABINET TALL CABINET

TYP. CABINET BLOCKING DETAIL — SCALE: N.T.S. — 8

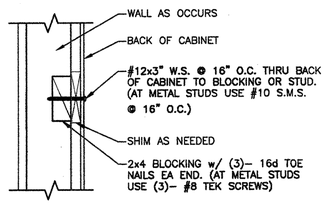

NOTE: FOR METAL STUD OPTION, SEE 20/S9.1 FOR BLOCKING.

CABINET BLOCKING — SCALE: N.T.S. — 9

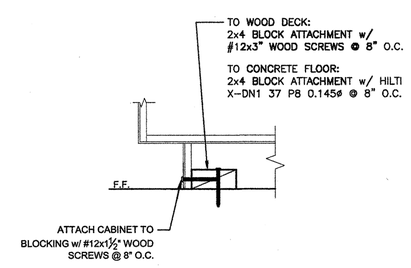

CABINET BLOCKING — SCALE: N.T.S. — 10

NOT USED — 11

NOT USED

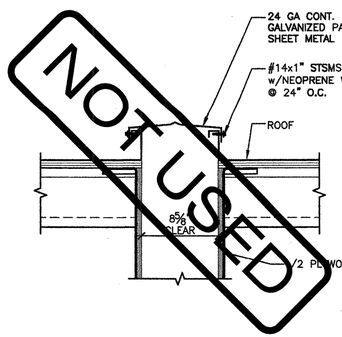

CLOSURE PIECE DETAIL @ ROOF — SCALE: N.T.S. — 12

NOT USED

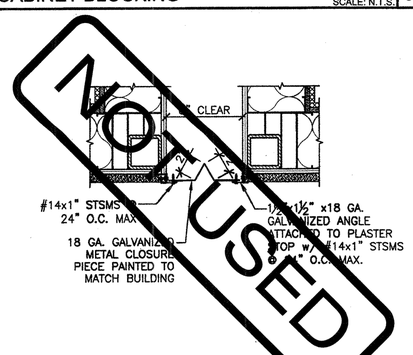

CLOSURE PIECE DETAIL @ WALL — SCALE: N.T.S. — 13

NOT USED

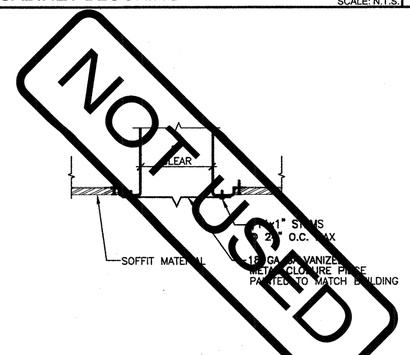

CLOSURE PIECE DETAIL @ SOFFIT — SCALE: N.T.S. — 15

NOT USED — 16

NOT USED — 17

AMS American Modular Systems
787 Spreckels Ave.Manteca, CA 95336
Phone (209) 825-1921 - Fax (209) 825-7018
americanmodular.com

MODULAR MANUFACTURER PROPRIETARY STATEMENT
THESE DRAWINGS AND THE MATERIAL CONTAINED THEREIN ARE THE PROPERTY OF AMERICAN MODULAR SYSTEMS, INC. (AMS) AND SHALL NOT BE REPRODUCED, COPIED OR OTHERWISE DISPOSED OF DIRECTLY OR INDIRECTLY AND SHALL NOT BE USED IN WHOLE OR IN PART TO ASSIST IN THE MAKING OF OR FOR THE PURPOSE OF FURNISHING ANY INFORMATION FOR THE MAKING OF DRAWINGS, PRINTS, APPARATUS OR PARTS THEREOF WITHOUT THE FULL KNOWLEDGE AND WRITTEN CONSENT OF AMS. ALL PATENTABLE MATERIAL CONTAINED HEREIN AND ORIGINATING WITH AMS SHALL BE THE SOLE PROPERTY OF AMS.

PRE-CHECKED SET NAME

30' x 32' THRU 150' x 32' BUILDINGS

SITE SPECIFIC PROJECT NAME

SHEET TITLE

MISCELLANEOUS ARCHITECTURAL DETAILS

MANUFACTURER PROFESSIONAL OF RECORD ON PC

LICENSED ARCHITECT RANDALL PATRICK GANNAGH No. C12631 Ren. 03-31-17 STATE OF CALIFORNIA

PROJECT SPECIFIC STATE AGENCY APPROVAL

IDENTIFICATION STAMP DIV. OF THE STATE ARCHITECT 02 I 16495 AC TM DATE 12-18-2017

ORIGINAL PC STATE AGENCY APPROVAL

IDENTIFICATION STAMP DIV. OF THE STATE ARCHITECT CA. DEPT. OF GENERAL SERVICES PC 02-113921 AC DATE 6/19/2015

PRE-CHECK (PC) DOCUMENT – CODE: 2013 CBC
A SEPARATE PROJECT APPLICATION FOR CONSTRUCTION IS REQUIRED

REVISIONS
1
2
3
4

DRAWN BY:
SCALE: AS NOTED
DATE:

SHEET NUMBER

A7.2

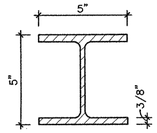

W5x16
FLOOR JOIST
ASTM = A36
GRADE = 36
Fy = 36ksi

A = 4.71 IN^2
Sx = 8.55 IN^3
Zx = 9.63 IN^2
Ix = 21.4 IN^4
t = .25 IN.

HOT ROLLED FLOOR JOIST PROPERTIES

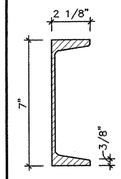

C 7x9.8
FLOOR BEAM

ASTM = A36
GRADE = 36
FY = 36 ksi

A = 2.87 IN^2
Sx = 6.07 IN^3
Zx = 7.19 IN^3
Ix = 21.20 IN^4
t = .1875 IN.

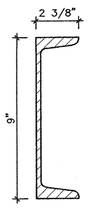

C9x13.4
FLOOR BEAM

ASTM = A36 GRADE 36
OR
ASTM = A572 GRADE 50

A = 3.94 IN^2
Sx = 10.60 IN^3
Zx = 12.60 IN^3
Ix = 47.80 IN^4
t = .25 IN.

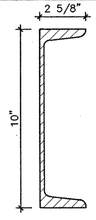

C 10x15.3
FLOOR BEAM

ASTM = A36
GRADE = 36
FY = 36 ksi

A = 4.48 IN^2
Sx = 13.50 IN^3
Zx = 15.90 IN^3
Ix = 67.30 IN^4
t = .25 IN.

HOT ROLLED FLOOR BEAM PROPERTIES

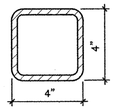

HSS 4x4x5/16
COLUMN

ASTM = A500
GRADE = 46
FY = 46ksi

A = 4.10 IN^2
Sx = 4.57 IN^3
Zx = 5.59 IN^3
Ix = 9.14 IN^4
t = .3125 IN.

HSS COLUMN PROPERTIES

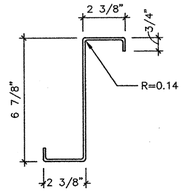

6-7/8" x 2-3/8" X 14 GA.
FLOOR JOIST (1)

ASTM A1011 GRADE 45(2)
F_Y = 45KSI

A = 0.89 IN^2
Sx = 1.85 IN^3
Ix = 6.37 IN^4
t = .068 IN.

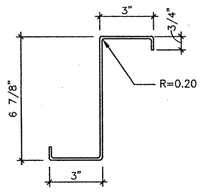

6-7/8"x3" X 12 GA.
FLOOR JOIST(1)

ASTM A1011 GRADE 45(2)
F_Y = 45KSI(2)

A = 1.38 IN^2
Sx = 2.97 IN^3
Ix = 10.20 IN^4
t = .097 IN.

NOTES:
1. MEMBERS TO BE FABRICATED FROM HOT ROLLED SHEETS WITH OPTIONAL RUST INHIBITIVE COATING.
2. STEEL GRADE 50 (F_Y=50KSI) AT STRUCTO-CRETE FLOOR OPTION

LIGHT GAUGE FLOOR JOIST MEMBER PROPERTIES

(26 GA. MAY BE USED w/PLYWOOD SHEATHING)

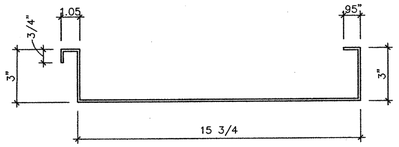

W/GALVANIZATION
t=0.0356 IN. MIN.

W/O GALVANIZATION
t=0.0329 IN. MIN.

ASTM = A101
GRADE = 36
FY = 36ksi

$S\bar{x}(t)$ = 0.364 IN^3
$S\bar{x}(b)$ = 1.372 IN^3
$I\bar{x}$ = 0.863 IN^4

$S\bar{x}(t)$ = 0.330 IN^3
$S\bar{x}(b)$ = 0.305 IN^3
$I\bar{x}$ = 0.476 IN.
A = 0.84 IN^2

NOTE:
MEMBERS TO BE FABRICATED FROM HOT ROLLED SHEETS WITH OPTIONAL RUST INHIBITIVE COATING.

20 GALVANIZED ROOF PAN PROPERTIES

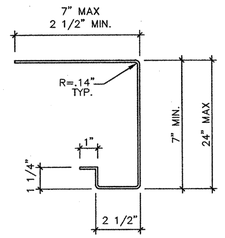

14 GA. FORMED SOFFIT CEE

ASTM = A1011
GRADE = 36
Fy = 36ksi
A = 0.97 IN^2
Sx = 1.78 IN^3
Ix = 6.87 IN^4
t = 0.0713 IN.

NOTE:
MEMBERS TO BE FABRICATED FROM HOT ROLLED SHEETS WITH OPTIONAL RUST INHIBITIVE COATING.

14GA FORMED SOFFIT CEE POPERTIES

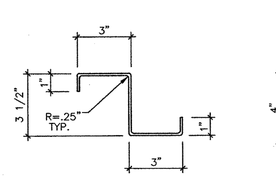

10 GA. ROOF PURLIN

ASTM = A1011
GRADE = 36
Fy = 36ksi
A = 1.30 IN^2
Sx = 1.49 IN^3
Ix = 2.60 IN^4
t = 0.118 IN. MIN.

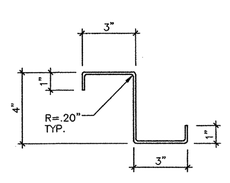

12 GA. ROOF PURLIN

ASTM = A1011
GRADE = 36
Fy = 36ksi
A = 1.14 IN^2
Sx = 1.50 IN^3
Ix = 3.00 IN^4
t = 0.097 IN. MIN.

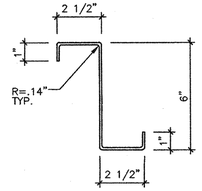

14 GA. ROOF PURLIN

ASTM = A1011
GRADE = 36
Fy = 36ksi
A = 0.089 IN^2
Sx = 1.65 IN^3
Ix = 4.95 IN^4
t = 0.068 IN. MIN.

NOTE:
MEMBERS TO BE FABRICATED FROM HOT ROLLED SHEETS WITH OPTIONAL RUST INHIBITIVE COATING.

LIGHT GAUGE ROOF PURLIN PROPERTIES

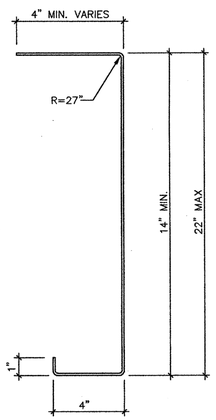

10 GA. LONGITUDINAL BEAM

ASTM = A1011
GRADE = 50
Fy = 50ksi
t = 0.135 IN.

	14"	18"	22
A (IN^2)	2.99	3.53	4.07
Sx MIN.(IN^3)	11.50	16.50	22.22
Ix MIN.(IN^4)	82.87	152.26	249.90

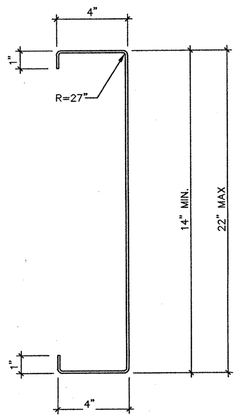

12 GA. TRANSVERSE BEAM/HEADER

ASTM = A1011
GRADE = 36
t = 0.1017 IN.

	14"	22"
A (IN^2)	2.36	3.17
Sx MIN.(IN^3)	9.57	18.18
Ix MIN.(IN^4)	67.02	199.97

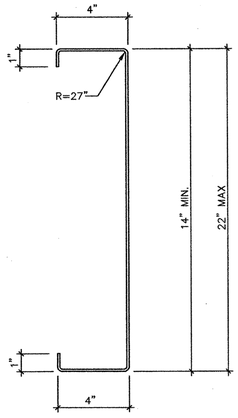

10 GA. TRANSVERSE BEAM/HEADER

ASTM = A1011
GRADE = 50
Fy = 50ksi
t = 0.135 IN.

	14"	22"
A (IN^2)	3.09	4.17
Sx MIN.(IN^3)	12.41	23.68
Ix MIN.(IN^4)	86.88	260.50

NOTE:
MEMBERS TO BE FABRICATED FROM HOT ROLLED SHEETS WITH OPTIONAL RUST INHIBITIVE COATING.

LIGHT GAGE ROOF BEAM MEMBERS PROPERTIES

1. THE MATERIAL THICKNESS OF LIGHT GAUGE STRUCTURAL MEMBERS, IN THEIR END-USE, SHALL MEET OR EXCEED THE MINIMUM BASE METAL THICKNESS SPECIFIED ON SHEET S0.0 THE MATERIAL GAGE DESIGNATION IN THE PLAN SHALL BE USED AS REFERENCE ONLY.

SHEET NOTES

American Modular Systems
787 Sprockels Ave.Manteca, CA 95336
Phone (209) 825-1921 - Fax (209) 825-7018
americanmodular.com

MODULAR MANUFACTURER PROPRIETARY STATEMENT

THESE DRAWINGS AND THE MATERIAL CONTAINED THEREIN ARE THE PROPERTY OF AMERICAN MODULAR SYSTEMS, INC. (AMS) AND SHALL NOT BE REPRODUCED, COPIED OR OTHERWISE DISPOSED OF DIRECTLY OR INDIRECTLY AND SHALL NOT BE USED IN WHOLE OR IN PART TO ASSIST IN THE MAKING OF OR FOR THE PURPOSE OF FURNISHING ANY INFORMATION FOR THE MAKING OF DRAWINGS, PRINTS, APPARATUS OR PARTS THEREOF WITHOUT THE FULL KNOWLEDGE AND WRITTEN CONSENT OF AMS. ALL PATENTABLE MATERIAL CONTAINED HEREIN AND ORIGINATING WITH AMS SHALL BE THE SOLE PROPERTY OF AMS.

PRE-CHECKED SET NAME

30' x 32' THRU 150' x 32' BUILDINGS

SITE SPECIFIC PROJECT NAME

SHEET TITLE

STEEL MEMBER PROPERTIES

MANUFACTURER PROFESSIONAL OF RECORD ON PC:

LICENSED ARCHITECT
RANDALL PATRICK CAVANAGH
No. C12631
Ren. 08-31-17
STATE OF CALIFORNIA

REGISTERED PROFESSIONAL ENGINEER
M. D. FASHANDI
No. S3380
Exp.03/31/16
STRUCTURAL
STATE OF CALIFORNIA

05/19/2015

PROJECT SPECIFIC STATE AGENCY APPROVAL

IDENTIFICATION STAMP
DIV. OF THE STATE ARCHITECT
02 II6495
AC — FLS — SS
DATE 12-18-2017

ORIGINAL PC STATE AGENCY APPROVAL

IDENTIFICATION STAMP
DIV. OF THE STATE ARCHITECT
CA. DEPT. OF GENERAL SERVICES
PC 02-113921
AC — FLS — SS
DATE 6/19/2015

PRE-CHECK (PC) DOCUMENT – CODE: 2013 CBC
A SEPARATE PROJECT APPLICATION FOR CONSTRUCTION IS REQUIRED

REVISIONS
1
2
3
4

DRAWN BY:
SCALE: AS NOTED
DATE:

SHEET NUMBER

S0.0

FOUNDATION INSTALL BY OTHERS STATEMENT

FOUNDATION DESIGN AND ENGINEERING BY AMS. INSTALLATION BY OTHERS. AMS IS NOT RESPONSIBLE FOR QUALITY OF INSTALLATION, INSPECTIONS, NOR ACCEPTANCE OF FOUNDATION. ANY REVIEW PERFORMED BY AMS SHALL BE CONSIDERED A COURTESY TO ASSIST WITH THE OVERALL PROJECT SUCCESS AND DOES NOT REMOVE THE CONTRACTOR'S RESPONSIBILITY TO COMPLY WITH PLANS AND SPECIFICATIONS. CONTRACTOR PERFORMING FOUNDATION INSTALLATION IS RESPONSIBLE TO ENSURE THE FOUNDATION IS COMPLETED PER PLANS, SPECIFICATION'S, AND MEETS TOLERANCES FOR MODULAR BUILDINGS AS DESCRIBED BELOW.

CRAWLSPACE TO BE 18" CLEAR MINIMUM FROM TOP OF STEM WALL TO TOP OF CONCRETE SLURRY. CONCRETE SLURRY (IF APPLICABLE) TO BE MIN 2" THICK, AND SLOPED TO UNDERFLOOR DRAINAGE (DRAINAGE TO COMPLY WITH IR 16-1)
TOP OF STEM WALL CANNOT BE MORE THAN 1/8" OUT OF PLANE, PLUMB AND LEVEL (HORIZONTAL, VERTICAL AND SQUARE, DIAGONAL) OVER THE OVERALL LENGTH AND WIDTH OF THE FOUNDATION FOOTPRINT.
AMS WILL NOT PROVIDE SUPERVISION NOR SIGN OFF ON WORK PERFORMED BY OTHERS.

IN THE EVENT ENGINEERING IS REQUIRED TO ACCOMMODATE ERROR'S OR OMISSION'S, REWORK, OR ADDITIONAL COORDINATION/ENGINEERING ALL EXPENSES SHALL BE REIMBURSED TO AMS.

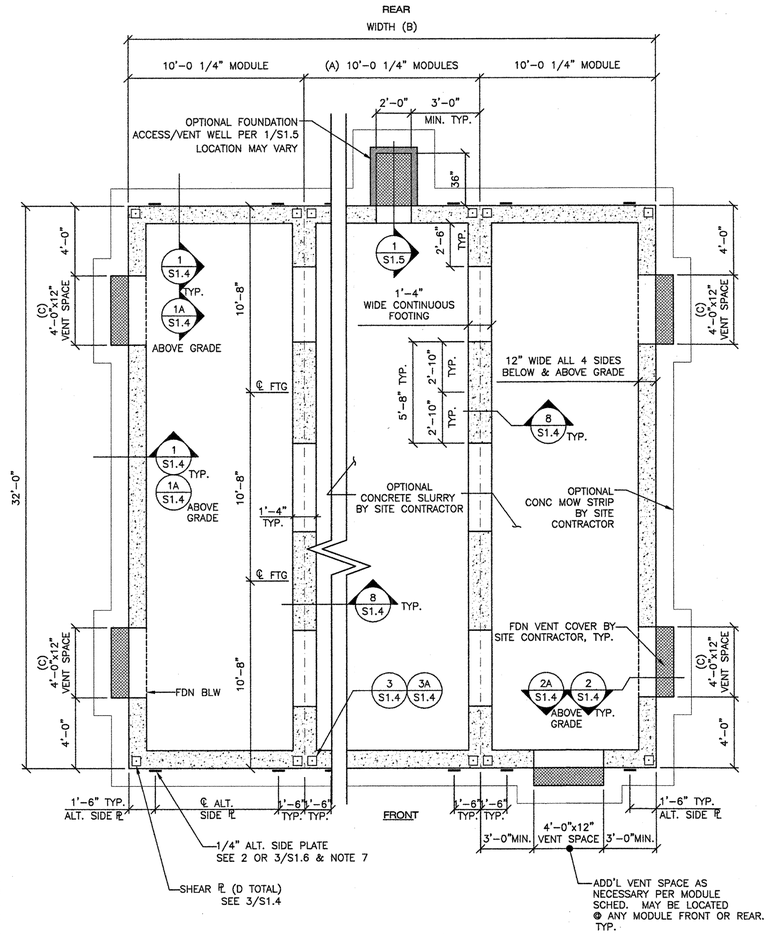

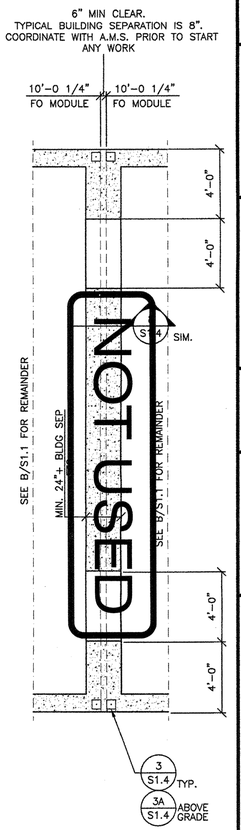

American Modular Systems
787 Spreckels Ave.Manteca, CA 95336
Phone (209) 825-1921 - Fax (209) 825-7018
americanmodular.com

MODULAR MANUFACTURER PROPRIETARY STATEMENT

THESE DRAWINGS AND THE MATERIAL CONTAINED THEREIN ARE THE PROPERTY OF AMERICAN MODULAR SYSTEMS, INC. (AMS) AND SHALL NOT BE REPRODUCED, COPIED OR OTHERWISE DISPOSED OF DIRECTLY OR INDIRECTLY AND SHALL NOT BE USED IN WHOLE OR IN PART TO ASSIST IN THE MAKING OF OR FOR THE PURPOSE OF FURNISHING ANY INFORMATION FOR THE MAKING OF DRAWINGS, PRINTS, APPARATUS OR PARTS THEREOF WITHOUT THE FULL KNOWLEDGE AND WRITTEN CONSENT OF AMS. ALL PATENTABLE MATERIAL CONTAINED HEREIN AND ORIGINATING WITH AMS SHALL BE THE SOLE PROPERTY OF AMS.

PRE-CHECKED SET NAME

30' x 32' THRU 150' x 32' BUILDINGS

SITE SPECIFIC PROJECT NAME

SHEET TITLE

CONCRETE FOUNDATION PLAN
50 PSF LIVE LOAD
+15 PARTITION LOAD

MANUFACTURER PROFESSIONAL OF RECORD ON PC:

LICENSED ARCHITECT — EMMONS PATRICK GRANATH — No. C12631 Ren. 08-31-17 — STATE OF CALIFORNIA

REGISTERED PROFESSIONAL ENGINEER — No. 53380 Exp.03/31/16 — STRUCTURAL — STATE OF CALIFORNIA

05/19/2015

PROJECT SPECIFIC STATE AGENCY APPROVAL

IDENTIFICATION STAMP DIV. OF THE STATE ARCHITECT
02 116495
AC — FLS — SS
DATE 12-18-2017

ORIGINAL PC STATE AGENCY APPROVAL

IDENTIFICATION STAMP DIV. OF THE STATE ARCHITECT CA. DEPT. OF GENERAL SERVICES
PC 02-113921
AC — FLS — SS
DATE 6/19/2015

PRE-CHECK (PC) DOCUMENT – CODE: 2013 CBC
A SEPARATE PROJECT APPLICATION FOR CONSTRUCTION IS REQUIRED

REVISIONS
1
2
3
4

DRAWN BY:
SCALE: AS NOTED
DATE:

SHEET NUMBER

S1.1

CONCRETE FOUNDATION PLAN (PLYWOOD OR STRUCTO-CRETE)[9] 50 PSF L. L +15 PARTITION LOAD — A

SCALE: 1/4"=1'-0"

FOUNDATION PLAN — A1

COMBINED SCALE: 1/4"=1'-0"

1. DO NOT INSTALL BUILDING IN AREAS OF WATER FLOW LINES.
2. ULTIMATE 28-DAY CONCRETE COMPRESSIVE STRENGTH SHALL BE 3000 PSI MIN. PER TITLE 24, PART 2, SECTION 1905A.1.1 PROPORTIONED PER ACI 318-11 SECTION 5.2
3. THE REINFORCING BARS MUST BE TESTED PER TITLE 24, PART 2, SECTION 1913A.2. TEST OF REINFORCING BARS MAY BE WAIVED BY THE STRUCTURAL ENGINEER WITH THE APPROVAL OF DSA FOR ONE-STORY BUILDING, PROVIDED CERTIFIED MILL TEST REPORTS ARE PROVIDED FOR EACH SHIPMENT OF SUCH REINFORCEMENT. THE CEMENT SHALL BE CERTIFIED PER SECTION 1913A.1
4. REINFORCING STEEL 60,000 PSI MINIMUM, PER ASTM A615
5. MINIMUM SOIL BEARING CAPACITY 1500 PSF.
6. DESIGN SOIL BEARING CAPACITY 1500 PSF.
7. ALTERNATE SIDE PLATES MUST COMPLETELY REPLACE TYPICAL SHEAR PLATES ALONG ANY ONE MODULE LINE (4 TOTAL ALTERNATE SIDE PLATES @ INTERIOR MODULE LINE AND 2 TOTAL ALTERNATE SIDE PLATES @ EXTERIOR MODULE LINE.) COMBINATION OF TYPICAL SHEAR PLATES AND ALTERNATE SIDE PLATES ALONG ANY ONE LINE IS NOT PERMITTED.
8. PROJECT ARCHITECT SHOULD VERIFY THE NET AREA OF THE VENT COVER BE EQUAL TO OR LARGER THAN THE VENT AREA REQUIRED SHOWN ON THE TABLE.
9. 3/4" STRUCTO-CRETE OVER LIGHT GA. FLOOR JOIST SHEET PER S3.0 IS CONSIDERED PLYWOOD OR STRUCTO-CRETE DESIGN AND MATCHES WITH DETAIL A FOR FOUNDATION PLAN. 1/2" STRUCTO-CRETE OVER B-DECK PER SHEET S3.1 SHALL USE DETAIL B FOR FOUNDATION PLAN.

NOTES

MODULE SCHEDULE

BLDG SIZE (FT)	TOTAL # OF 10' WIDE MODULES	"A" TOTAL # OF CENTER MODULES	"B" TOTAL BLDG WIDTH	TOTAL FLOOR AREA (FT^2)	"C" MIN. TOTAL # 4'x12" VENTS REQ'D	NET VENT AREA REQ'D (FT^2)	NET VENT AREA PROVIDED (FT^2)	"D" TOTAL # OF TYPICAL SHEAR ℄'s
☐ 30x32	3	1	30'-¾"	960	2	6.4	8.0	12
☐ 40x32	4	2	40'-1"	1280	3	8.5	12.0	16
☐ 50x32	5	3	50'-1¼"	1600	3	10.7	12.0	20
☐ 60x32	6	4	60'-1½"	1920	4	12.8	16.0	24
☐ 70x32	7	5	70'-1¾"	2240	4	14.9	16.0	28
☐ 80x32	8	6	80'-2"	2560	5	17.1	20.0	32
☐ 90x32	9	7	90'-2¼"	2880	5	19.2	20.0	36
☐ 100x32	10	8	100'-2½"	3200	6	21.3	24.0	40
☐ 110x32	11	9	110'-2¾"	3520	6	23.5	24.0	44
☐ 120x32	12	10	120'-3"	3840	7	25.6	28.0	48
☐ 130x32	13	11	130'-3¼"	4160	7	27.7	28.0	52
☐ 140x32	14	12	140'-3½"	4480	8	29.9	32.0	56
☐ 150x32	15	13	150'-3¾"	4800	8	32.0	32.0	60

NOT USED
NOT USED

MODULE SCHEDULE

FOUNDATION PLAN — B1

SCALE: 1/4"=1'-0"

COMBINED

1. DO NOT INSTALL BUILDING IN AREAS OF WATER FLOW LINES.
2. ULTIMATE 28-DAY CONCRETE COMPRESSIVE STRENGTH SHALL BE 3000 PSI MIN. PER TITLE 24, PART 2, SECTION 1905A.1.1 PROPORTIONED PER ACI 318-11 SECTION 5.2
3. THE REINFORCING BARS MUST BE TESTED PER TITLE 24, PART 2, SECTION 1913A.2. TEST OF REINFORCING BARS MAY BE WAIVED BY THE STRUCTURAL ENGINEER WITH THE APPROVAL OF DSA FOR ONE-STORY BUILDING, PROVIDED CERTIFIED MILL TEST REPORTS ARE PROVIDED FOR EACH SHIPMENT OF SUCH REINFORCEMENT. THE CEMENT SHALL BE CERTIFIED PER SECTION 1913A.1
4. REINFORCING STEEL 60,000 PSI MINIMUM, PER ASTM A615
5. MINIMUM SOIL BEARING CAPACITY 1500 PSF.
6. DESIGN SOIL BEARING CAPACITY 1500 PSF.
7. ALTERNATE SIDE PLATES MUST COMPLETELY REPLACE TYPICAL SHEAR PLATES ALONG ANY ONE MODULE LINE (4 TOTAL ALTERNATE SIDE PLATES @ INTERIOR MODULE LINE AND 2 TOTAL ALTERNATE SIDE PLATES @ EXTERIOR MODULE LINE.) COMBINATION OF TYPICAL SHEAR PLATES AND ALTERNATE SIDE PLATES ALONG ANY ONE LINE IS NOT PERMITTED.
8. PROJECT ARCHITECT SHOULD VERIFY THE NET AREA OF THE VENT COVER BE EQUAL TO OR LARGER THAN THE VENT AREA REQUIRED SHOWN ON THE TABLE.
9. 3/4" STRUCTO-CRETE OVER LIGHT GA. FLOOR JOIST SHEET PER S3.0 IS CONSIDERED PLYWOOD OR STRUCTO-CRETE DESIGN AND MATCHES WITH DETAIL A FOR FOUNDATION PLAN. 1/2" STRUCTO-CRETE OVER B-DECK PER SHEET S3.1 SHALL USE DETAIL B FOR FOUNDATION PLAN.

NOTES

MODULE SCHEDULE

BLDG SIZE (FT)	TOTAL # OF 10' WIDE MODULES	"A" TOTAL # OF CENTER MODULES	"B" TOTAL BLDG WIDTH	TOTAL FLOOR AREA (FT^2)	"C" MIN. TOTAL # 4'x12" VENTS REQ'D	NET VENT AREA REQ'D (FT^2)	NET VENT AREA PROVIDED (FT^2)	"D" TOTAL # OF TYPICAL SHEAR ℄'s
☐ 30x32	3	1	30'-¾"	960	2	6.4	8.0	12
☐ 40x32	4	2	40'-1"	1280	3	8.5	12.0	16
☐ 50x32	5	3	50'-1¼"	1600	3	10.7	12.0	20
☒ 60x32	6	4	60'-1½"	1920	4	12.8	16.0	24
☐ 70x32	7	5	70'-1¾"	2240	4	14.9	16.0	28
☐ 80x32	8	6	80'-2"	2560	5	17.1	20.0	32
☐ 90x32	9	7	90'-2¼"	2880	5	19.2	20.0	36
☐ 100x32	10	8	100'-2½"	3200	6	21.3	24.0	40
☐ 110x32	11	9	110'-2¾"	3520	6	23.5	24.0	44
☐ 120x32	12	10	120'-3"	3840	7	25.6	28.0	48
☐ 130x32	13	11	130'-3¼"	4160	7	27.7	28.0	52
☐ 140x32	14	12	140'-3½"	4480	8	29.9	32.0	56
☐ 150x32	15	13	150'-3¾"	4800	8	32.0	32.0	60

MODULE SCHEDULE

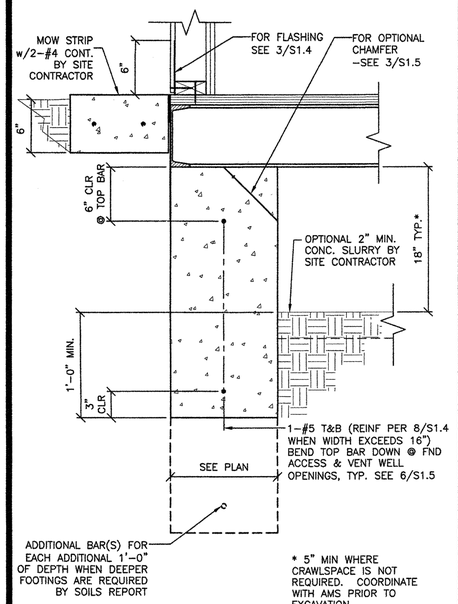

BELOW GRADE SECTION

SCALE:1 1/2"=1'-0" | 1

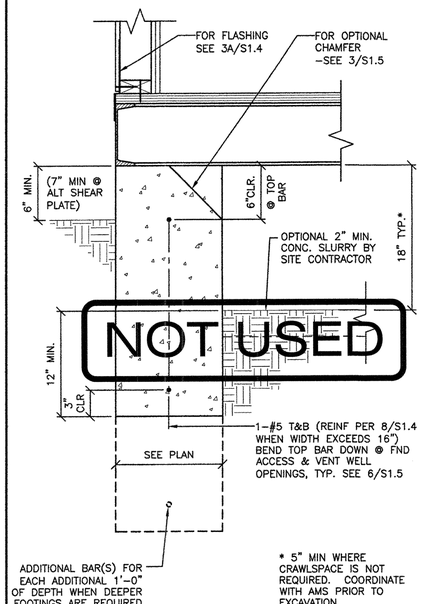

NOT USED

ABOVE GRADE SECTION

SCALE:1 1/2"=1'-0" | 1A

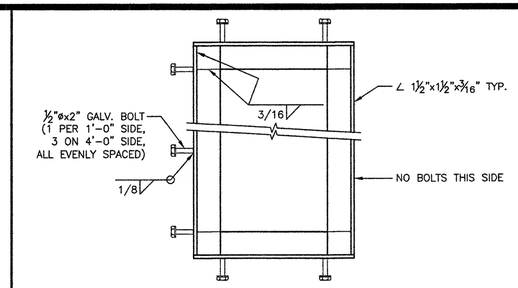

A GRATING FRAME DETAIL
3"=1'-0"

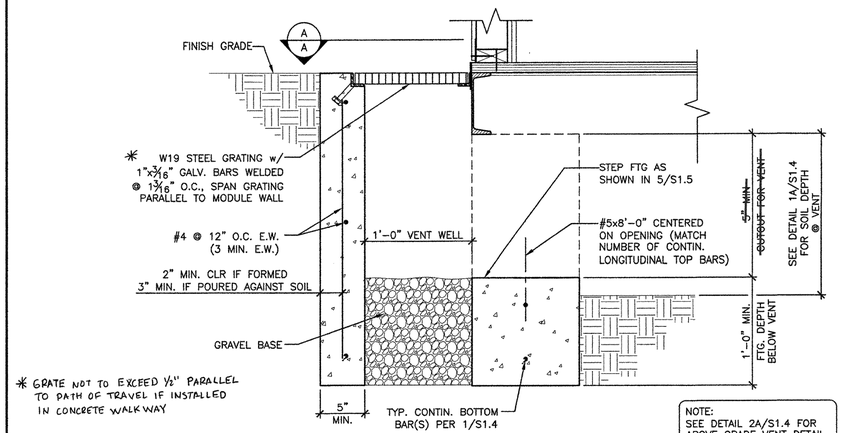

* GRATE NOT TO EXCEED ½" PARALLEL TO PATH OF TRAVEL IF INSTALLED IN CONCRETE WALKWAY

NOTE:
SEE DETAIL 2A/S1.4 FOR ABOVE GRADE VENT DETAIL.

BELOW GRADE VENT DETAIL

SCALE: 1 1/2"=1'-0" | 2

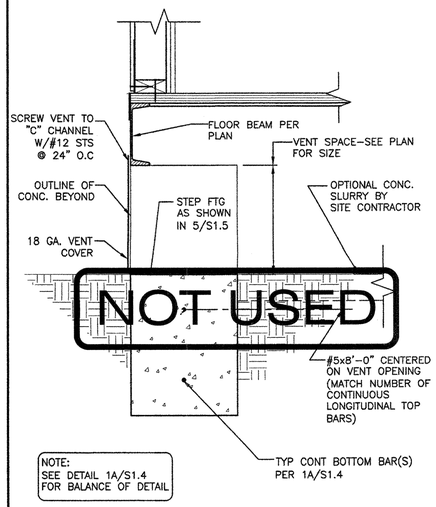

NOT USED

NOTE:
SEE DETAIL 1A/S1.4 FOR BALANCE OF DETAIL

ABOVE GRADE SECTON/VENT DETAIL

SCALE:1 1/2"=1'-0" | 2A

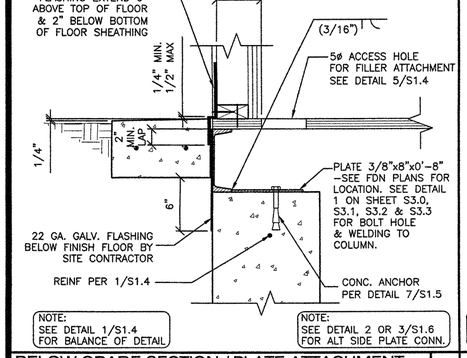

BELOW GRADE SECTION / PLATE ATTACHMENT

SCALE:1 1/2"=1'-0" | 3

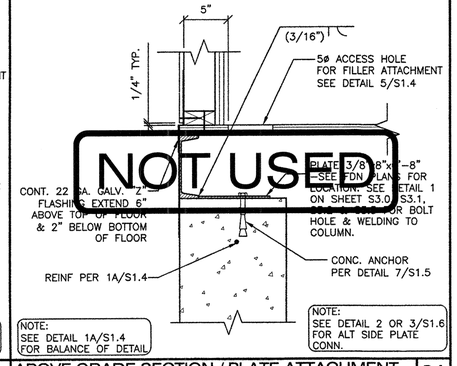

NOT USED

ABOVE GRADE SECTION / PLATE ATTACHMENT

SCALE:1 1/2"=1'-0" | 3A

REINFORCING SCHEDULE		
FOOTING WIDTH (IN.)	CONTINUOUS LONGITUDINAL REINFORCING (EACH LEVEL)	TRANSVERSE REINFORCING (EACH LEVEL)
≤16"	(1) #5	NOT REQ'D
>16"≤24"	(2) #5	#5'S @ 24" O.C.

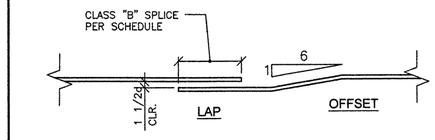

ALTERNATE: PLACE BARS IN CONTACT & WIRE TOGETHER

BAR LAP

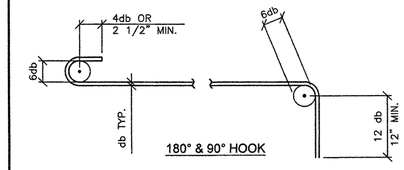

BAR SIZE #	DEVELOPMENT LENGTH[2]			TYPICAL CLASS B LAP SPLICE LENGTH					
	3000 PSI (IN)	3500 PSI (IN)	4000 PSI (IN)	3000 PSI		3500 PSI		4000 PSI	
				TOP[1] (IN)	BOTTOM (IN)	TOP[1] (IN)	BOTTOM (IN)	TOP[1] (IN)	BOTTOM (IN)
3	13	12	12	21	16	20	16	20	16
4	17	16	15	28	22	26	20	24	19
5	21	20	18	35	27	33	25	30	24
6	25	23	22	42	32	39	30	36	28

NOTES: THE ABOVE TABLE IS BASED ON GRADE 60 STEEL
1. TOP BARS ARE ANY BARS WITH MORE THAN 12" OF CONCRETE PLACED BELOW.
2. DEVELOPMENT LENGTH IS CALCULATED FOR TYP. BARS – Ψ_t=1.0

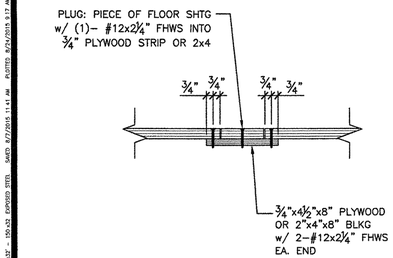

FILLER ACCESS HOLE DETAIL

SCALE:1 1/2"=1'-0" | 5

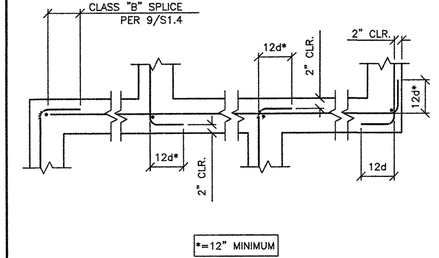

TYPICAL FOOTING REINFORCING @ CORNER & INTERSECTIONS

SCALE:1 1/2"=1'-0" | 6

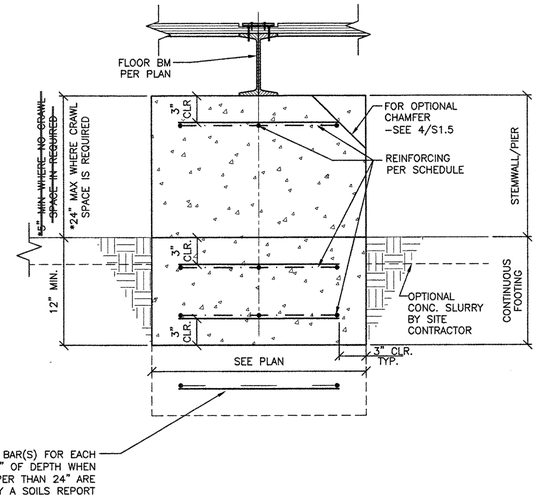

CENTER PIER SECTION

SCALE:1 1/2"=1'-0" | 8

TYPICAL REINFORCING BENDS

SCALE:1 1/2"=1'-0" | 9

American Modular Systems
787 Spreckels Ave.Manteca, CA 95336
Phone (209) 825-1921 - Fax (209) 825-7018
americanmodular com

MODULAR MANUFACTURER PROPRIETARY STATEMENT

THESE DRAWINGS AND THE MATERIAL CONTAINED THEREIN ARE THE PROPERTY OF AMERICAN MODULAR SYSTEMS, INC. (AMS) AND SHALL NOT BE REPRODUCED, COPIED OR OTHERWISE DISPOSED OF DIRECTLY OR INDIRECTLY AND SHALL NOT BE USED IN WHOLE OR IN PART TO ASSIST IN THE MAKING OF OR FOR THE PURPOSE OF FURNISHING ANY INFORMATION FOR THE MAKING OF DRAWINGS, PRINTS, APPARATUS OR PARTS THEREOF WITHOUT THE FULL KNOWLEDGE AND WRITTEN CONSENT OF AMS. ALL PATENTABLE MATERIAL CONTAINED HEREIN AND ORIGINATING WITH AMS SHALL BE THE SOLE PROPERTY OF AMS.

PRE-CHECKED SET NAME

30' x 32' THRU 150' x 32' BUILDINGS

SITE SPECIFIC PROJECT NAME

SHEET TITLE

CONCRETE FOUNDATION DETAILS

MANUFACTURER PROFESSIONAL OF RECORD ON PC

LICENSED ARCHITECT GREGORY PATRICK CROWHURST No. C12631 Ren. 08-31-17 STATE OF CALIFORNIA

REGISTERED PROFESSIONAL ENGINEER MANUEL D. FLORES No. S3380 STRUCTURAL STATE OF CALIFORNIA

09/08/2015

PROJECT SPECIFIC STATE AGENCY APPROVAL

IDENTIFICATION STAMP DIV. OF THE STATE ARCHITECT 02 116495 AC — FLS — SS DATE 12-18-2017

ORIGINAL PC STATE AGENCY APPROVAL

IDENTIFICATION STAMP DIV. OF THE STATE ARCHITECT CA. DEPT. OF GENERAL SERVICES PC 02-113921 REV.1 AC FLS SS DATE 10/5/2015

PRE-CHECK (PC) DOCUMENT – CODE: 2013 CBC
A SEPARATE PROJECT APPLICATION FOR CONSTRUCTION IS REQUIRED

REVISIONS

DRAWN BY:

SCALE: AS NOTED

DATE:

SHEET NUMBER

S1.4

02-113921 - 30'x32' - 150'x32' EXPOSED STEEL DWG 8/27/2015 11:41 AM PLOTTED 9/24/2015 9:37 AM

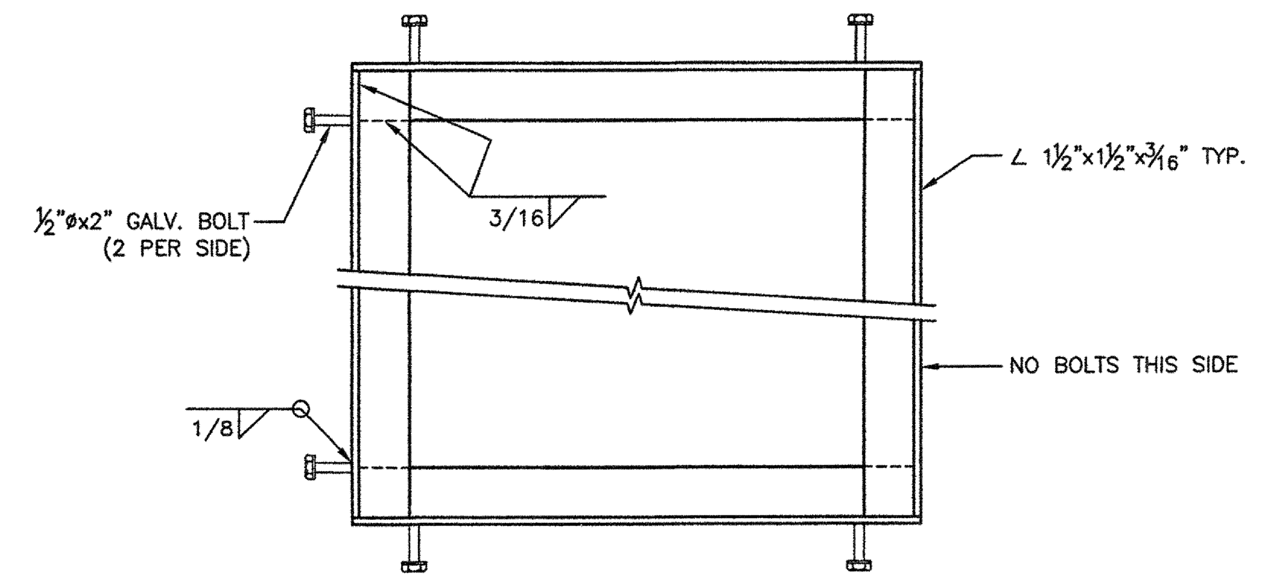

A GRATING FRAME DETAIL
3"=1'-0"

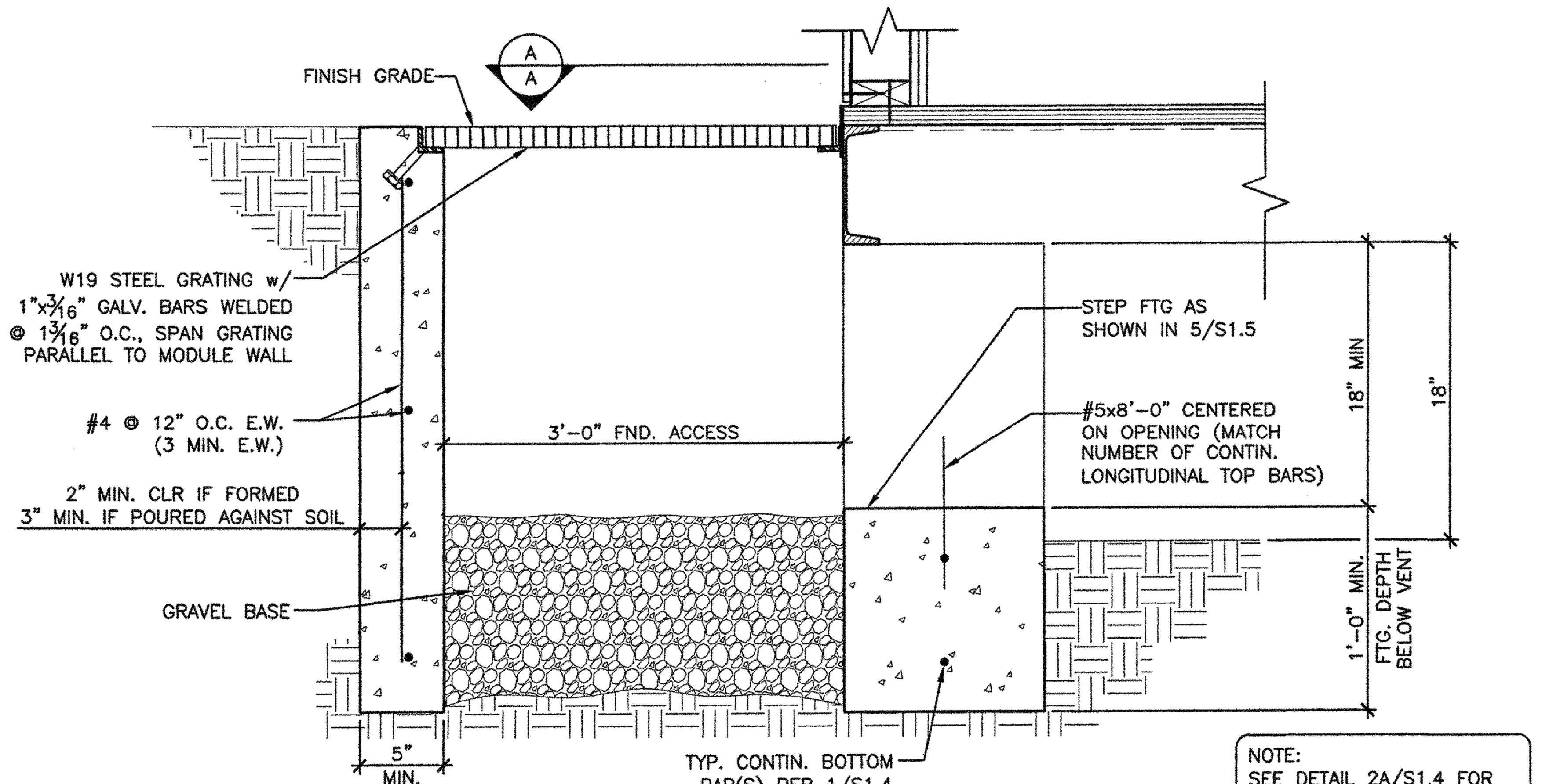

NOTE:
SEE DETAIL 2A/S1.4 FOR ABOVE GRADE VENT DETAIL.

BELOW GRADE ACCESS/VENT DETAIL
SCALE: 1 1/2"=1'-0" 1

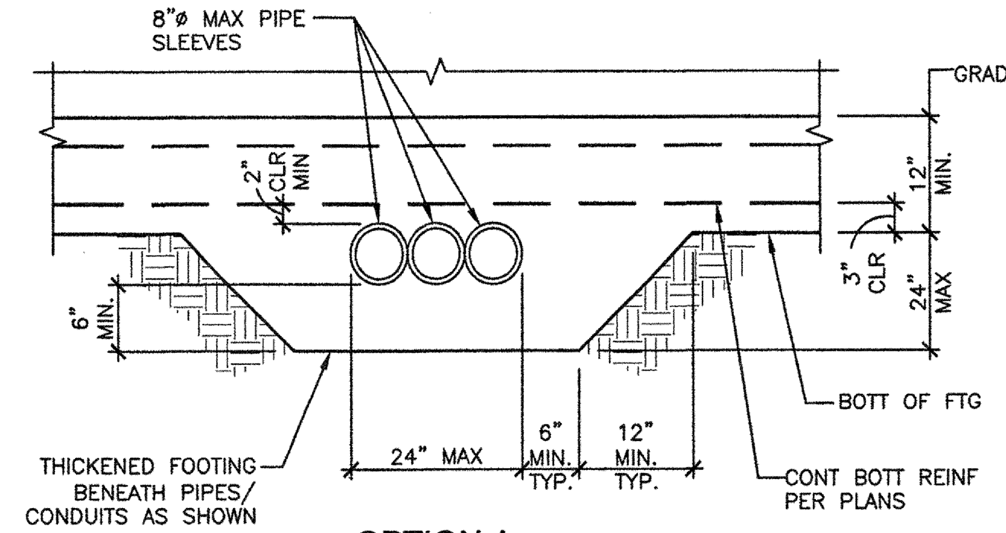

OPTION A

NOTES:
1. AS AN OPTION TO INDIVIDUAL PIPE SLEEVES THE FOOTING MAY BE BLOCKED OUT FOR MULTIPLE PIPES (10" HIGH x 24" WIDE MAX @ OPTION "A", 8" HIGH x 24" WIDE MAX OPTION "B") OR INDIVIDUAL PROVIDE 1" MIN CLEARANCE ALL AROUND BTWN PIPES/CONDUITS & BLOCKOUT/SLEEVES & FILL W/ CAULK.
2. CONCRETE SHALL BE WELL CONSOLIDATED AROUND & UNDER PIPES, CONDUITS, SLEEVES, BLOCKOUTS TO PREVENT CONCRETE VOIDS.
3. PROVIDE 2" CLEAR MIN BETWEEN BLOCKOUT SLEEVES AND REINFORCEMENT.
4. WHERE TOP OF PIPES/CONDUITS ARE 12" OR MORE BELOW THE BOTTOM OF THE FOOTING, THICKENED FOOTING AROUND PIPES/CONDUITS IS NOT REQUIRED. BACKFILL & COMPACT TO 95 % OVER PIPES / CONDUITS PRIOR TO PLACING FOOTING.

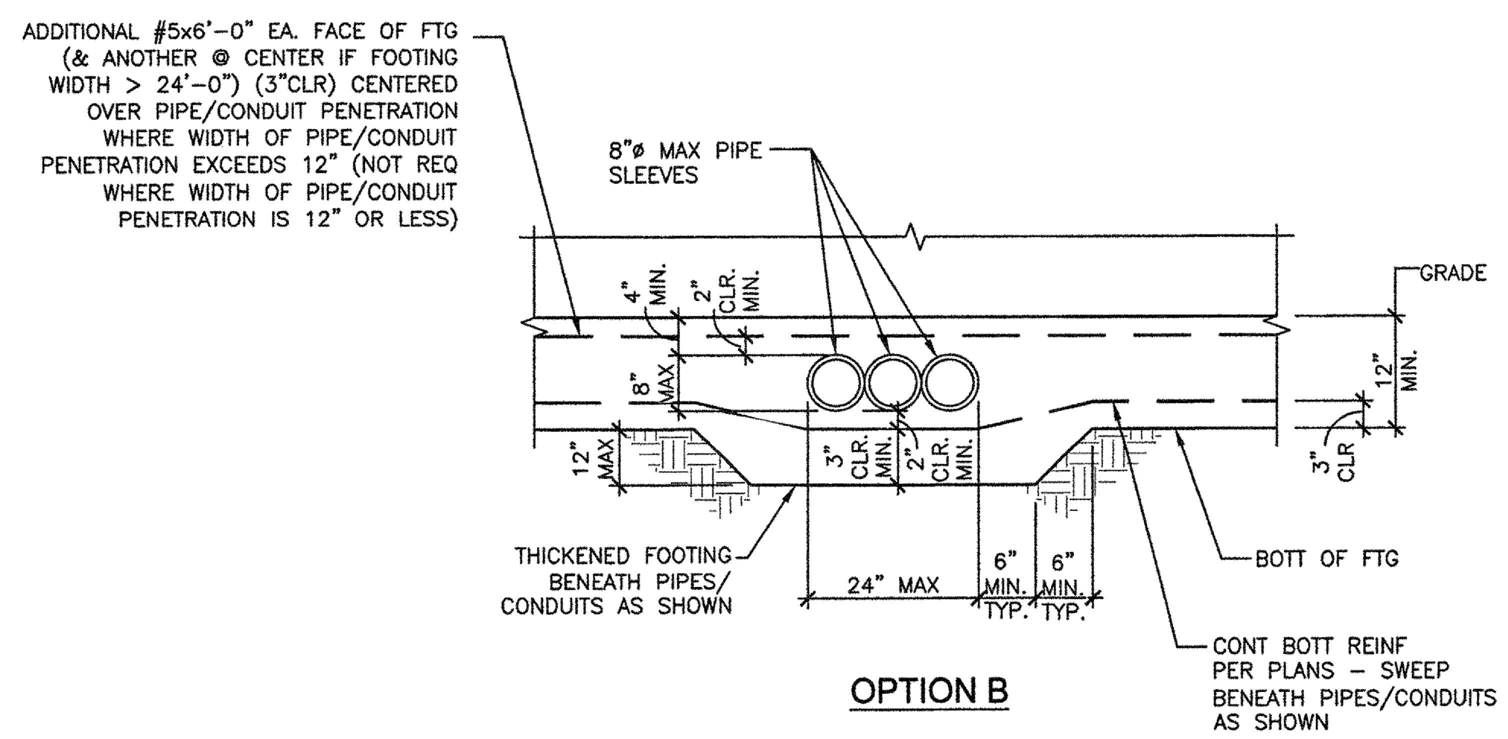

OPTION B

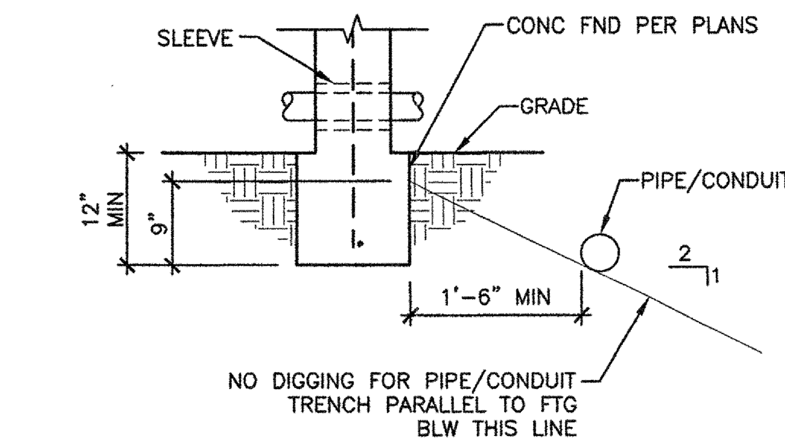

ALL PIPES TO CLEAR SLEEVES BY 1" ALL AROUND TYP. CAULK WITH PLASTIC MATERIAL

PIPE SLEEVE DETAIL
SCALE: 3/4"=1'-0" 2

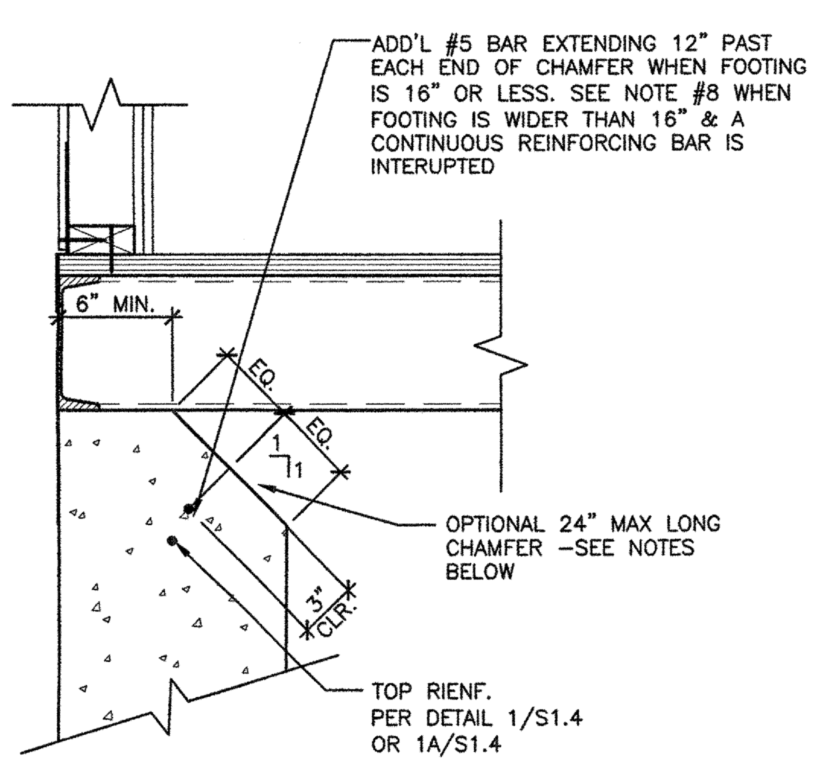

NOTES:
1. CHAMFER MAY BE LOCATED ALONG ALL LOCATIONS OF THE PERIMETER OF THE BUILDING FOUNDATION UNLESS OTHERWISE NOTED ON PLAN OR AS DESCRIBED BELOW.
2. CHAMFER SHALL NOT BE LOCATED WITHIN 2'-6" OF THE CORNERS OF THE BUILDING FOUNDATION.
3. CHAMFER SHALL NOT BE LOCATED WITHIN 1'-6" OF ALTERNATE SIDE PLATE LOCATIONS
4. CHAMFERS AT FRONT OR REAR END WALL FOOTINGS SHALL NOT BE LOCATED WITHIN 2'-6" OF A MODULE LINE
5. CHAMFERS SHALL NOT BE LOCATED WITHIN 1'-6" OF UTILITY OPENINGS PER SHEET S1.7
6. CHAMFER MAY OCCUR AT THE ENDS OF VENT OR ACCESS OPENINGS
7. BOTTOM OF CHAMFER SHALL NOT BE LOWER THAN FINISHED GRADE
8. WHERE THE FOOTING IS WIDER THAN 16" AND THE CHAMFER INTERUPTS A CONTINUOUS LONGITUDINAL REINFORCING BAR, PROVIDE AN ADDITIONAL #5 x 6'-0" BAR 3" CLEAR AND CENTERED ON THE CHAMFER
9. FOR ALL ITEMS NOT SHOWN OR NOTED SEE DETAILS 1/S1.4 & 1A/S1.4.

CHAMFER DETAILS @ PERIMETER
SCALE:1 1/2"=1'-0" 3

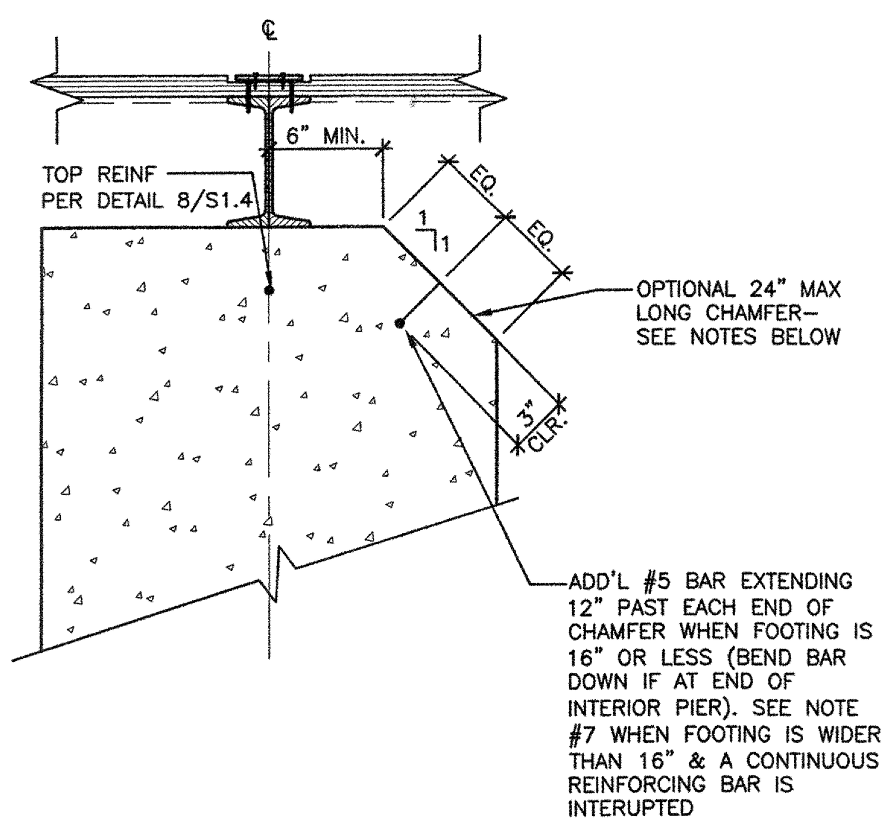

NOTES:
1. CHAMFER MAY BE LOCATED ALONG ALL LOCATIONS OF INTERIOR FOOTING OF THE BUILDING FOUNDATION UNLESS OTHERWISE NOTED ON PLAN OR AS DESCRIBED BELOW.
2. CHAMFER SHALL NOT BE LOCATED WITHIN 2'-6" OF THE ENDS OF THE BUILDING.
3. CHAMFER MAY OCCUR ON BOTH SIDES OF THE FOOTING CONCURRENTLY.
4. CHAMFER SHALL NOT BE LOCATED WITHIN 1'-6" OF UTILITY OPENING PER SHEET S1.7
5. CHAMFER MAY OCCUR AT THE ENDS OF INTERIOR PIERS
6. BOTTOM OF CHAMFER SHALL NOT BE LOWER THAN FINISHED GRADE
7. WHERE THE FOOTING IS WIDER THAN 16" AND THE CHAMFER ITERUPTS A CONTINUOUS LONGITUDINAL REINFORING BAR, PROVIDE AN ADDITIONAL #5 x 6'-0" BAR 3" CLEAR AND CENTERED ON THE CHAMFER (BEND BAR DOWN IF AT END OF INTERIOR PIER)
8. FOR ALL ITEMS NOT SHOWN OR NOTED –SEE DETAIL /S1.4.

CHAMFER DETAILS @ INTERIOR
SCALE:1 1/2"=1'-0" 4

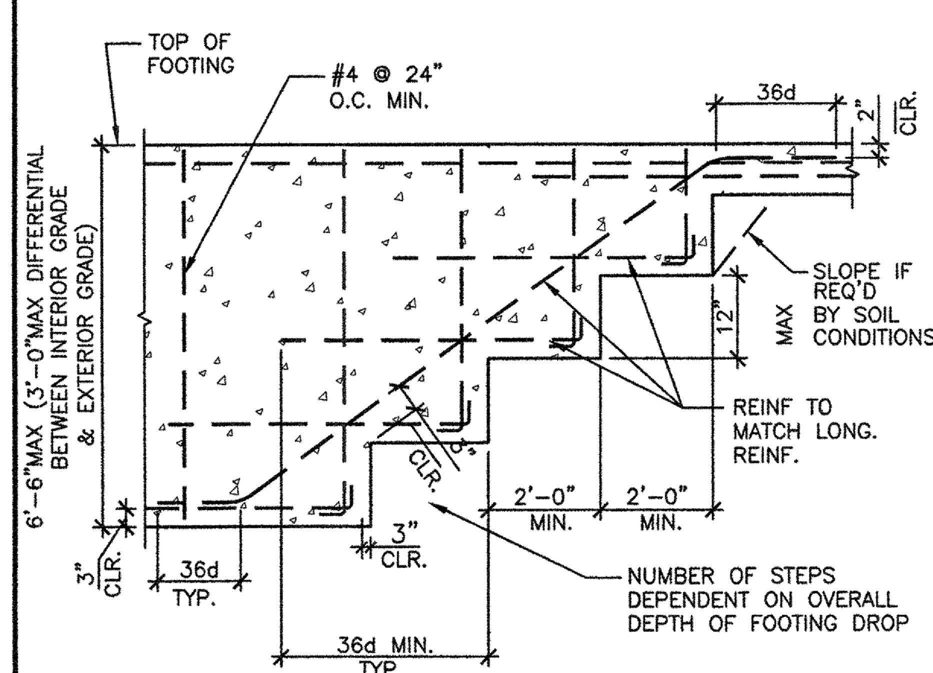

NOTE: SEE SECTIONS FOR FTG WIDTH & REINF

VENT/ACCESS VENT OPENING DETAIL
SCALE:1 1/2"=1'-0" 5

NOTE:
SEE SECTIONS FOR FTG WIDTH & REINF

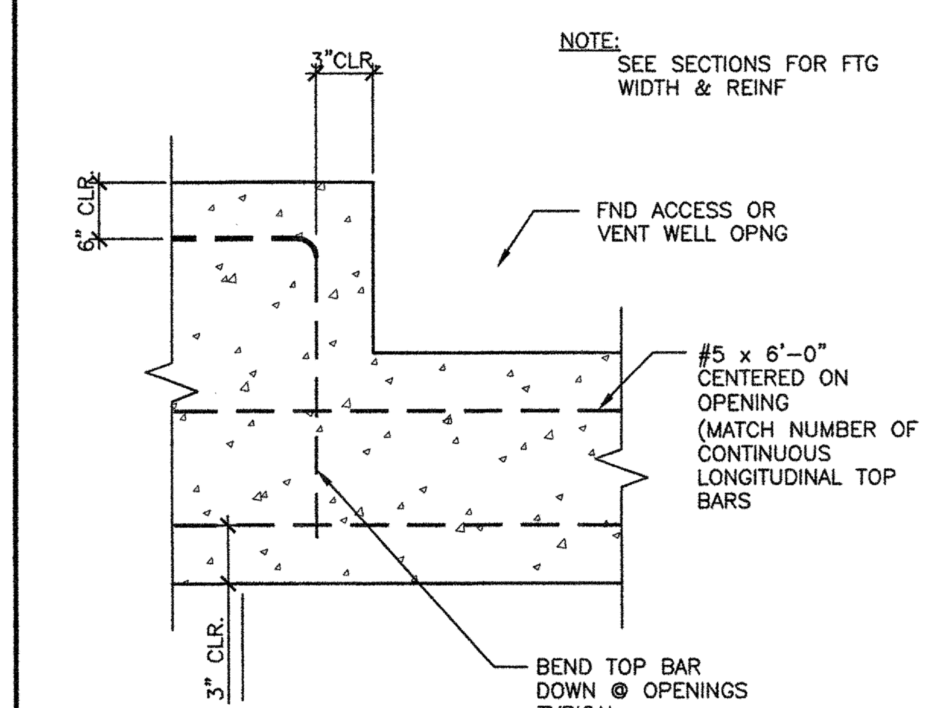

TYPICAL STEPPED FOOTING
SCALE:1 1/2"=1'-0" 6

LOW SEISMIC

CONCRETE ANCHOR SCHEDULE		
FLOOR LOAD	WOOD FLOOR ANCHOR SIZE*	CONCRETE FLOOR ANCHOR SIZE*
~~50~~	~~1/2"ø~~	~~1/2"ø~~
50 + 15	1/2"ø	1/2"ø
~~100~~	~~1/2"ø~~	~~1/2"ø~~
~~150~~	~~1/2"ø~~	~~1/2"ø~~

*ANCHORS (OTHER THAN 3/4"ø) MAY BE EITHER "HILTI" KB–TZ OR 'SIMPSON" STRONG BOLTS PER TABLE BELOW.

HIGH SEISMIC (crossed out)

CONCRETE ANCHOR SCHEDULE		
FLOOR LOAD	WOOD FLOOR ANCHOR SIZE*	CONCRETE FLOOR ANCHOR SIZE**
50	1/2"ø	1/2"ø
50 + 15	1/2"ø	1/2"ø
100	1/2"ø	1/2"ø
150	1/2"ø	1/2"ø

*ANCHORS (OTHER THAN 3/4"ø) MAY BE EITHER "HILTI" KB–TZ OR 'SIMPSON" STRONG BOLTS PER TABLE BELOW.
** 3/4" ANCHORS MUST BE "HILTI" KB–TZ PER TABLE BELOW.

ANCHOR TYPE	HILTI KWIK KB-TZ ICC ESR-1917			SIMPSON STRONG-BOLT 2 ICC ESR-3037		
ANCHOR SIZE (IN)	1/2"ø	.	3/4"	1/2"ø	.	.
MIN EMBED (IN)	4"	.	5 3/4"	4 1/8"	.	.
INSTALLATION TORQUE (FT-LB)	40	.	110	60	.	.
CRITICAL DIM 'A' - MIN (IN)	6 3/4"	.	7 3/4	6 3/4"	.	.
CRITICAL DIM 'B' - MIN (IN)	6 1/4"	.	6 3/4"	6 3/4"	.	.
CRITICAL DIM 'C' - MIN (IN)	5 3/4	.	6 3/4"	5 3/4"	.	.
CRITICAL DIM 'D' - MIN (IN)	5 3/4"	.	6 3/4"	5 1/4"	.	.

1. TORQUE TEST PER CBC 1913A.7
TORQUE TEST – MANUFACTURER'S RECOMMENDED INSTALLATION TORQUE AS APPROVED IN AN ICC–ESR PER C.B.C 1913A.7
2. NORMAL WEIGHT CONCRETE WITH f'c= 3000 PSI TO COMPLY WITH 1913A.2 FOR MATERIAL TEST WAIVER.

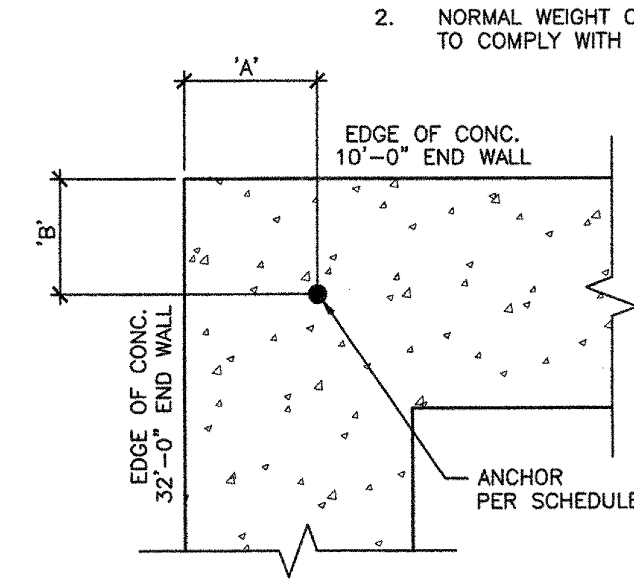

CRITICAL ANCHOR DIMENSIONS @ BUILDING CORNERS

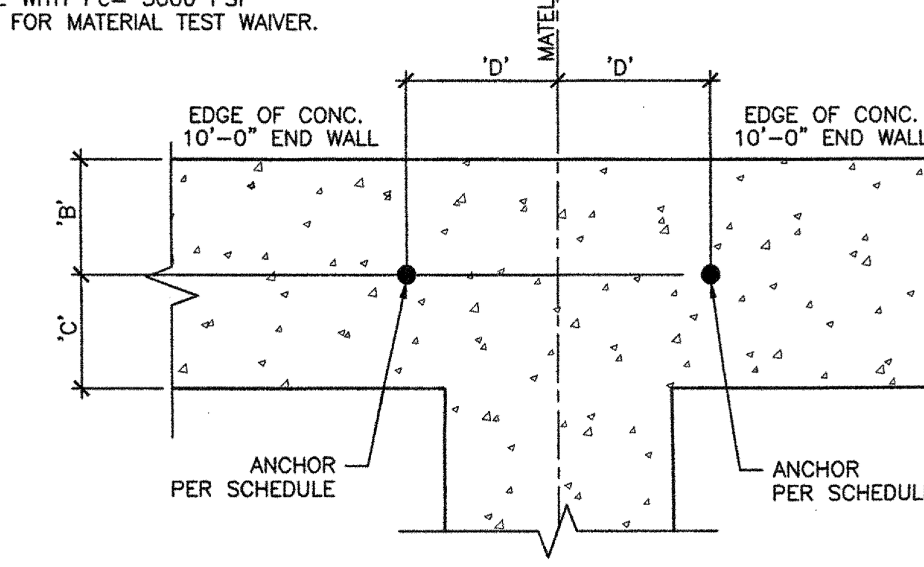

CRITICAL ANCHOR DIMENSIONS @ MATELINES

CONCRETE ANCHOR AND ANCHOR BOLT SCHEDULE
7

American Modular Systems
787 Spreckels Ave.Manteca, CA 95336
Phone (209) 825-1921 - Fax (209) 825-7018
americanmodular com

MODULAR MANUFACTURER PROPRIETARY STATEMENT
THESE DRAWINGS AND THE MATERIAL CONTAINED THEREIN ARE THE PROPERTY OF AMERICAN MODULAR SYSTEMS, INC. (AMS) AND SHALL NOT BE REPRODUCED, COPIED OR OTHERWISE DISPOSED OF DIRECTLY OR INDIRECTLY AND SHALL NOT BE USED IN WHOLE OR IN PART TO ASSIST IN THE MAKING OF OR FOR THE PURPOSE OF FURNISHING ANY INFORMATION FOR THE MAKING OF DRAWINGS, PRINTS, APPARATUS OR PARTS THEREOF WITHOUT THE FULL KNOWLEDGE AND WRITTEN CONSENT OF AMS. ALL PATENTABLE MATERIAL CONTAINED HEREIN AND ORIGINATING WITH AMS SHALL BE THE SOLE PROPERTY OF AMS.

PRE–CHECKED SET NAME
30' x 32' THRU 150' x 32' BUILDINGS

SITE SPECIFIC PROJECT NAME

SHEET TITLE
CONCRETE FOUNDATION OPTIONAL UTILTIY OPENINGS IN FOOTINGS

MANUFACTURER PROFESSIONAL OF RECORD ON PC
LICENSED ARCHITECT RANDALL PATRICK CAVANAGH No. C12631 Ren. 03-31-17 STATE OF CALIFORNIA
REGISTERED PROFESSIONAL ENGINEER MARK D. FRISCH No. S3380 STRUCTURAL STATE OF CALIFORNIA
09/08/2015

PROJECT SPECIFIC STATE AGENCY APPROVAL
IDENTIFICATION STAMP DIV. OF THE STATE ARCHITECT
02 116495
AC – FLS – SS
DATE 12-18-2017

ORIGINAL PC STATE AGENCY APPROVAL
IDENTIFICATION STAMP DIV. OF THE STATE ARCHITECT CA. DEPT. OF GENERAL SERVICES
PC 02–113921 REV. 1
AC — FLS — SS
DATE 10/5/2015

PRE–CHECK (PC) DOCUMENT – CODE: 2013 CBC
A SEPARATE PROJECT APPLICATION FOR CONSTRUCTION IS REQUIRED

REVISIONS
1
2
3
4

DRAWN BY:
SCALE: AS NOTED
DATE:
SHEET NUMBER
S1.5

02–113921 – 30x32 – 150'x32' EXPOSED STEEL SAVED 8/7/2015 11:43 AM PLOTTED 8/24/2015 9:17 AM

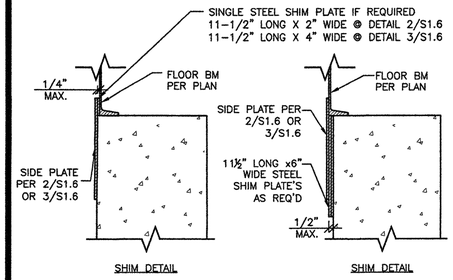

ALTERNATE SIDE PLATE SHIM DETAIL | 1

SCALE:1 1/2"=1'-0"

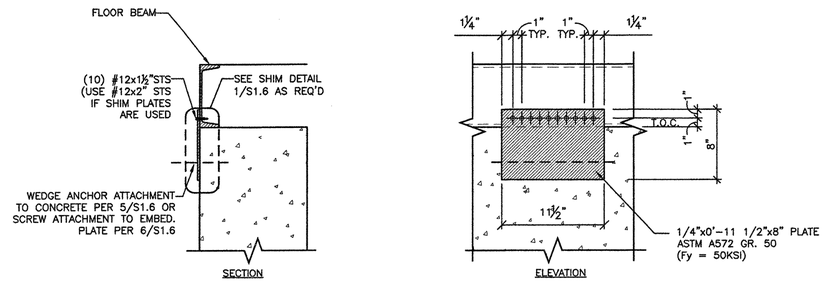

ALTERNATE SIDE PLATE DETAIL | 2

SCALE:1 1/2"=1'-0"

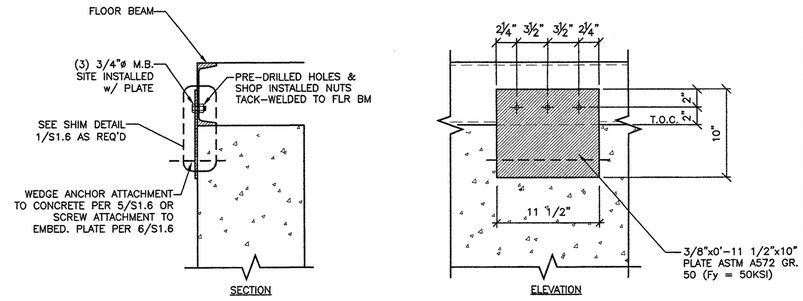

ALTERNATE SIDE PLATE DETAIL | 3

SCALE:1 1/2"=1'-0"

NOT USED | 4

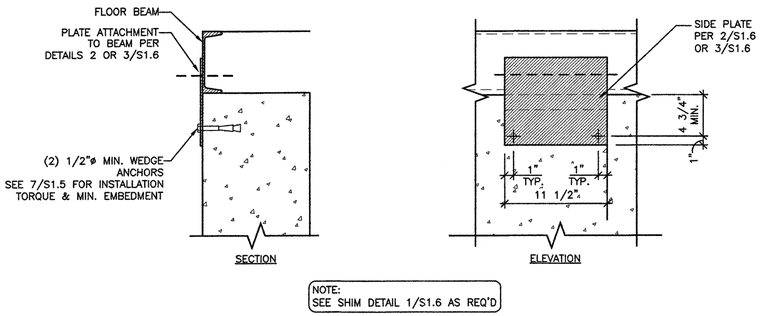

ALTERNATE SIDE PLATE BOTTOM ATTACHMENT DETAIL | 5

SCALE:1 1/2"=1'-0"

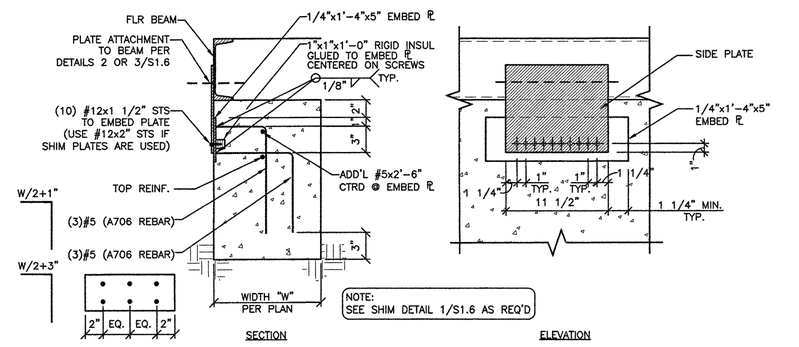

ALTERNATE SIDE PLATE ALTERNATE BOTTOM ATTACHMENT DETAIL | 6

SCALE:1 1/2"=1'-0"

NOT USED | 7

NOT USED | 8

NOT USED | 9

NOT USED | 10

NOT USED | 11

American Modular Systems
787 Spreckels Ave.Manteca, CA 95336
Phone (209) 825-1921 - Fax (209) 825-7018
americanmodular.com

MODULAR MANUFACTURER PROPRIETARY STATEMENT

THESE DRAWINGS AND THE MATERIAL CONTAINED THEREIN ARE THE PROPERTY OF AMERICAN MODULAR SYSTEMS, INC. (AMS) AND SHALL NOT BE REPRODUCED, COPIED OR OTHERWISE DISPOSED OF DIRECTLY OR INDIRECTLY AND SHALL NOT BE USED IN WHOLE OR IN PART TO ASSIST IN THE MAKING OF OR FOR THE PURPOSE OF FURNISHING ANY INFORMATION FOR THE MAKING OF DRAWINGS, PRINTS, APPARATUS OR PARTS THEREOF WITHOUT THE FULL KNOWLEDGE AND WRITTEN CONSENT OF AMS. ALL PATENTABLE MATERIAL CONTAINED HEREIN AND ORIGINATING WITH AMS SHALL BE THE SOLE PROPERTY OF AMS.

PRE-CHECKED SET NAME

30' x 32' THRU 150' x 32' BUILDINGS

SITE SPECIFIC PROJECT NAME

SHEET TITLE

CONCRETE FOUNDATION DETAILS

MANUFACTURER PROFESSIONAL OF RECORD ON PC

LICENSED ARCHITECT RAMON PATRICK CREAMER No. C12631 Ren. 2531-17 STATE OF CALIFORNIA

REGISTERED PROFESSIONAL ENGINEER MANNY D. ARCH No. S3380 STRUCTURAL STATE OF CALIFORNIA

PROJECT SPECIFIC STATE AGENCY APPROVAL

IDENTIFICATION STAMP DIV. OF THE STATE ARCHITECT
02 116495
AC - FLS - SS JDS
DATE 12-18-2017

ORIGINAL PC STATE AGENCY APPROVAL

IDENTIFICATION STAMP DIV. OF THE STATE ARCHITECT CA. DEPT. OF GENERAL SERVICES
PC 02-113921 Rev. 1
AC - FLS - SS
DATE 10/5/2015

PRE-CHECK (PC) DOCUMENT - CODE: 2013 CBC
A SEPARATE PROJECT APPLICATION FOR CONSTRUCTION IS REQUIRED

REVISIONS

1
2
3
4

DRAWN BY:

SCALE: AS NOTED

DATE:

SHEET NUMBER

S1.6

02-113921 - 30'-0" - 150'x32' EXPOSED STEEL SHEET: 9/8/2015 2:03 PM PLOTTED: 9/8/2015 2:03 PM

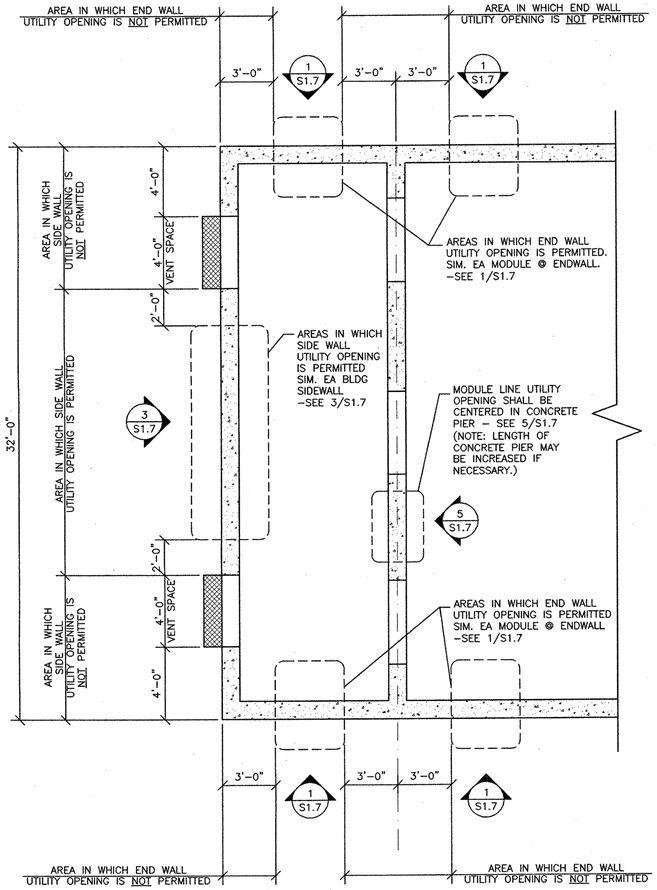

OPTIONAL UTILITY OPENINGS PLAN

SCALE: 1/4"=1'-0" | A

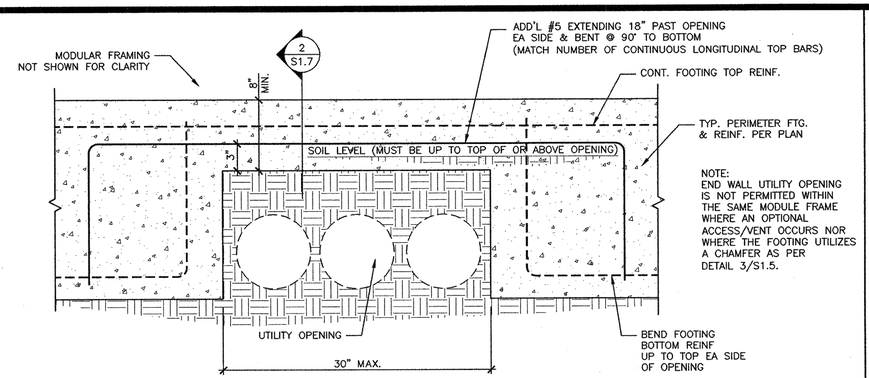

OPTIONAL UTILITY OPENINGS IN END WALL FOOTINGS

SCALE: 1 1/2"=1'-0" | 1

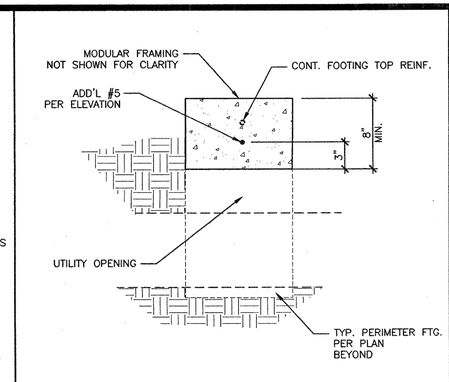

DETAIL

SCALE: 1 1/2"=1'-0" | 2

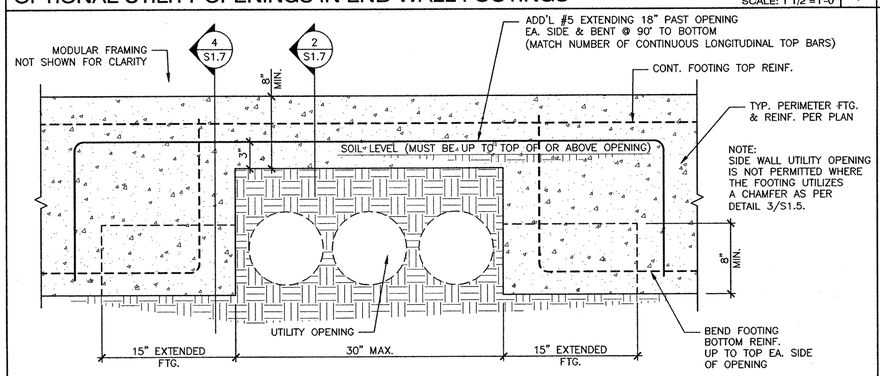

OPTIONAL UTILITY OPENINGS IN SIDE WALL FOOTINGS

SCALE: 1 1/2"=1'-0" | 3

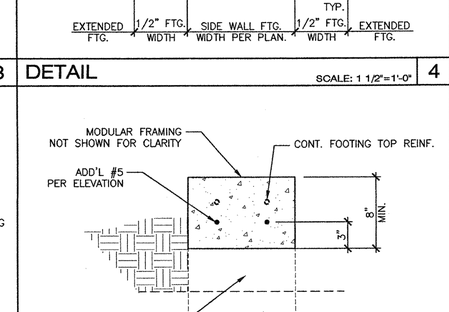

DETAIL

SCALE: 1 1/2"=1'-0" | 4

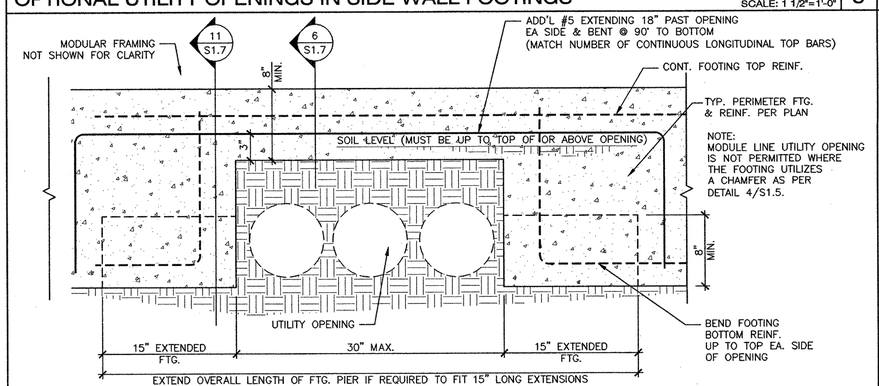

OPTIONAL UTILITY OPENINGS IN MODULE LINE FOOTINGS

SCALE: 1 1/2"=1'-0" | 5

DETAIL

SCALE: 1 1/2"=1'-0" | 6

NOT USED | 7

NOT USED | 8

NOT USED | 9

NOT USED | 10

DETAIL

SCALE: 1 1/2"=1'-0" | 11

American Modular Systems
787 Spreckels Ave.Manteca, CA 95336
Phone (209) 825-1921 - Fax (209) 825-7018
americanmodular.com

MODULAR MANUFACTURER PROPRIETARY STATEMENT

THESE DRAWINGS AND THE MATERIAL CONTAINED THEREIN ARE THE PROPERTY OF AMERICAN MODULAR SYSTEMS, INC. (AMS) AND SHALL NOT BE REPRODUCED, COPIED OR OTHERWISE DISPOSED OF DIRECTLY OR INDIRECTLY AND SHALL NOT BE USED IN WHOLE OR IN PART TO ASSIST IN THE MAKING OF OR FOR THE PURPOSE OF FURNISHING ANY INFORMATION FOR THE MAKING OF DRAWINGS, PRINTS, APPARATUS OR PARTS THEREOF WITHOUT THE FULL KNOWLEDGE AND WRITTEN CONSENT OF AMS. ALL PATENTABLE MATERIAL CONTAINED HEREIN AND ORIGINATING WITH AMS SHALL BE THE SOLE PROPERTY OF AMS.

PRE-CHECKED SET NAME

30' x 32' THRU 150' x 32' BUILDINGS

SITE SPECIFIC PROJECT NAME

SHEET TITLE

CONCRETE FOUNDATION OPTIONAL UTILITY OPENINGS IN FOOTINGS

MANUFACTURER PROFESSIONAL OF RECORD ON PC:

LICENSED ARCHITECT RAMDAS PATRICK CAVANAGH No. C12631 Ren. 03-31-17 STATE OF CALIFORNIA

REGISTERED PROFESSIONAL ENGINEER MANUEL D. FRANCISCO No. S3380 Exp.03/31/16 STRUCTURAL STATE OF CALIFORNIA

05/19/2015

PROJECT SPECIFIC STATE AGENCY APPROVAL

IDENTIFICATION STAMP DIV. OF THE STATE ARCHITECT
02 116495
AC — FLS — SS
DATE 12-18-2014

ORIGINAL PC STATE AGENCY APPROVAL

IDENTIFICATION STAMP DIV. OF THE STATE ARCHITECT CA. DEPT. OF GENERAL SERVICES
PC 02-113921
AC FLS SS
DATE 6/19/2015

PRE-CHECK (PC) DOCUMENT – CODE: 2013 CBC
A SEPARATE PROJECT APPLICATION FOR CONSTRUCTION IS REQUIRED

REVISIONS

1
2
3
4

DRAWN BY:

SCALE: AS NOTED

DATE:

SHEET NUMBER

S1.7

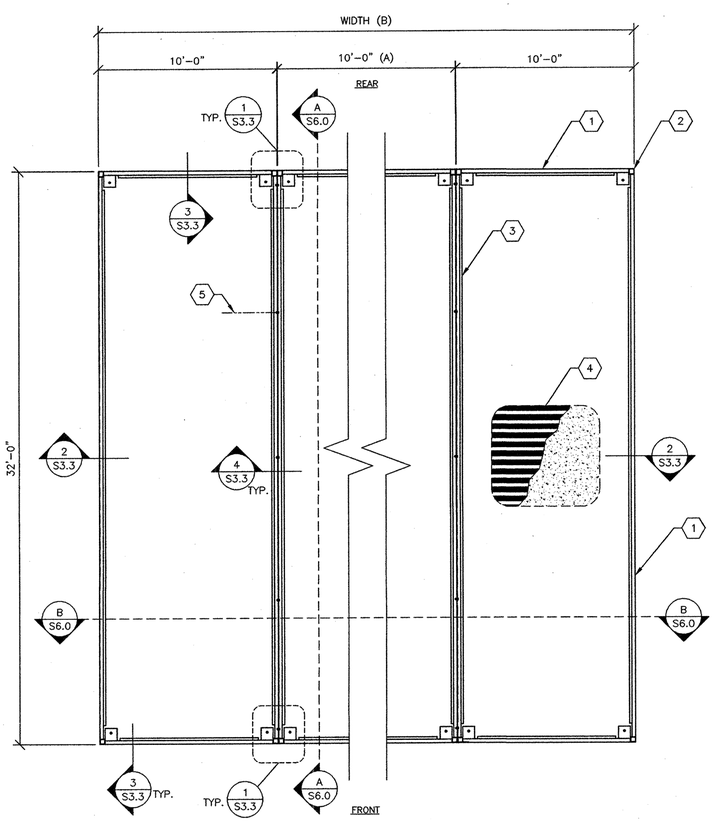

FLOOR FRAMING PLAN (CONCRETE OVER 3W DECK OPTION) 150 PSF MAX FLOOR LIVE LOAD

SCALE : 1/4"=1'-0" | A

BLDG SIZE (FT)	TOTAL # OF 10' WIDE MODULES	"A" TOTAL # OF CENTER MODULES	"B" TOTAL BLDG WIDTH
☐ 30' x 32'	3	1	30'-1/2"
☐ 40' x 32'	4	2	40'-3/4"
☐ 50' x 32'	5	3	50'-1"
☒ 60' x 32'	6	4	60'-1 1/4"
☐ 70' x 32'	7	5	70'-1 1/2"
☐ 80' x 32'	8	6	80'-1 3/4"
☐ 90' x 32'	9	7	90'-2"
☐ 100' x 32'	10	8	100'-2 1/4"
☐ 110' x 32'	11	9	110'-2 1/2"
☐ 120' x 32'	12	10	120'-2 3/4"
☐ 130' x 32'	13	11	130'-3"
☐ 140' x 32'	14	12	140'-3 1/4"
☐ 150' x 32'	15	13	150'-3 1/2"

MODULE SCHEDULE

MINIMUM PROPERTIES				
PLAN DESIGNATION	DECK TYPE	S_{gbot} IN³/FT	I_g IN⁴/FT	ALLOW DIAPHRAGM SHEAR *
	3"-18 GA ASC 3W GALV DECK (36" WIDE)	0.771	1.20	1320 PLF w/ 2" LWC TOPPING (5" TOTAL SLAB THICKNESS)

DECK PROFILE

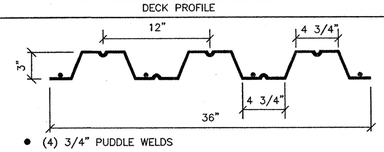

● (4) 3/4" PUDDLE WELDS

SIDE LAP ATTACHMENT TO BE BOTTON PUNCHED @ 36" O.C.
*NOTE: ASC STEEL DECKING: ICC ESR #2408

3W METAL DECK PROPERTIES AND PROFILE

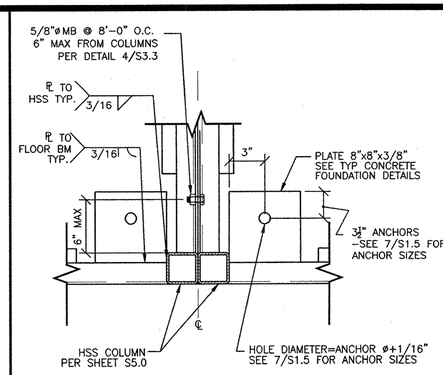

TYP. FLOOR BEAMS CONNECTION

SCALE : 1 1/2"=1'-0" | 1

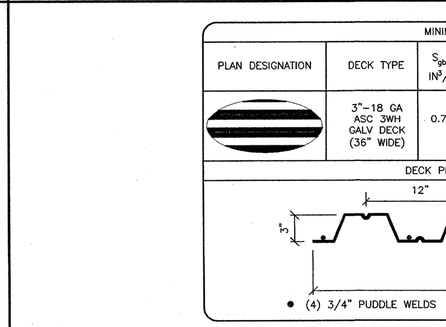

TYP. PERIMETER CONNECTION

SCALE : 1 1/2"=1'-0" | 2

TYP. PERIMETER CONNECTION

SCALE : 1 1/2"=1'-0" | 3

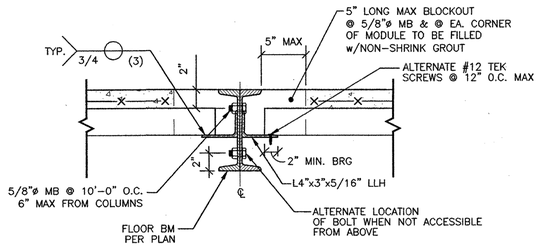

THE LONGITUDINAL FLOOR CHANNEL CONNECTIONS ARE NOMINAL AND ARE NOT REQUIRED STRUCTURALLY AT BUILDINGS ON CONCRETE FOUNDATIONS.

NOTE: REFER TO 2/S3.3 FOR WELDING OF LLH 4x3x5/16" TO CHASIS BEAM

TYP. END CONNECTION

SCALE : 1 1/2"=1'-0" | 4

MINIMUM PROPERTIES				
PLAN DESIGNATION	DECK TYPE	S_{gbot} IN³/FT	I_g IN⁴/FT	ALLOW DIAPHRAGM SHEAR *
	3"-18 GA ASC 3WH GALV DECK (36" WIDE)	0.761	1.113	1091 PLF w/ 2" LWC TOPPING (5" TOTAL SLAB THICKNESS)

DECK PROFILE

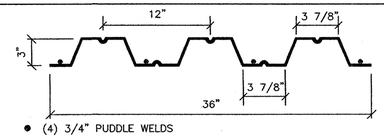

● (4) 3/4" PUDDLE WELDS

SIDE LAP ATTACHMENT TO BE BOTTON PUNCHED @ 36" O.C.
*NOTE: ASC STEEL DECKING: UES ER #0329

3WH METAL DECK PROPERTIES & PROFILE

KEY NOTES

1. FLOOR BEAM PER SHEET S5.0. USE SINGLE SIZE CHANNEL THROUGHOUT FLOOR SYSTEM.
2. HSS COLUMN PER SHEET S5.0
3. L4"x3"x5/16" LLH
4. 2" LT WEIGHT CONCRETE FILL w/ 6x6/W1.4xW1.4 WWF w/ 1'-0" LAP OVER ASC 18 GA. 3W OR 3WH GALVANIZED DECK (5" MAX. TOTAL THICKNESS). DECK SIDE LAP ATTACHMENT TO BE BUTTON PUNCHED @ 36" O.C.

   NOTE: SEE ICC ER-2408 FOR ASC BRAND STEEL DECKING
5. 5/8"ø MB @ 8'-0" O.C. 6" MAX FROM COLUMNS

AMS
American Modular Systems
787 Spreckels Ave.Manteca, CA 95336
Phone (209) 825-1921 - Fax (209) 825-7018
americanmodular.com

MODULAR MANUFACTURER PROPRIETARY STATEMENT

THESE DRAWINGS AND THE MATERIAL CONTAINED THEREIN ARE THE PROPERTY OF AMERICAN MODULAR SYSTEMS, INC. (AMS) AND SHALL NOT BE REPRODUCED, COPIED OR OTHERWISE DISPOSED OF DIRECTLY OR INDIRECTLY AND SHALL NOT BE USED IN WHOLE OR IN PART TO ASSIST IN THE MAKING OF OR FOR THE PURPOSE OF FURNISHING ANY INFORMATION FOR THE MAKING OF DRAWINGS, PRINTS, APPARATUS OR PARTS THEREOF WITHOUT THE FULL KNOWLEDGE AND WRITTEN CONSENT OF AMS. ALL PATENTABLE MATERIAL CONTAINED HEREIN AND ORIGINATING WITH AMS SHALL BE THE SOLE PROPERTY OF AMS.

PRE-CHECKED SET NAME

30' x 32' THRU 150' x 32' BUILDINGS

SITE SPECIFIC PROJECT NAME

SHEET TITLE

FLOOR FRAMING PLAN AND DETAILS CONCRETE FLOOR w/ 3w DECK OPTION (150 PSF MAX FLOOR L.L.)

MANUFACTURER PROFESSIONAL OF RECORD ON PC:

LICENSED ARCHITECT RANDALL PATRICK CAVANAGH No. C12631 Ren. 08/31/17 STATE OF CALIFORNIA

REGISTERED PROFESSIONAL ENGINEER MARIO D. FRANCO No. 53380 Exp.03/31/16 STRUCTURAL STATE OF CALIFORNIA

05/19/2015

PROJECT SPECIFIC STATE AGENCY APPROVAL

IDENTIFICATION STAMP DIV. OF THE STATE ARCHITECT 02 116495 AC — FLS — SS tos DATE 12-18-2017

ORIGINAL PC STATE AGENCY APPROVAL

IDENTIFICATION STAMP DIV. OF THE STATE ARCHITECT CA. DEPT. OF GENERAL SERVICES PC 02-113921 AC FLS SS DATE 6/19/2015

PRE-CHECK (PC) DOCUMENT - CODE: 2013 CBC
A SEPARATE PROJECT APPLICATION FOR CONSTRUCTION IS REQUIRED

REVISIONS

1
2
3
4

DRAWN BY:

SCALE: AS NOTED

DATE:

SHEET NUMBER

S3.3

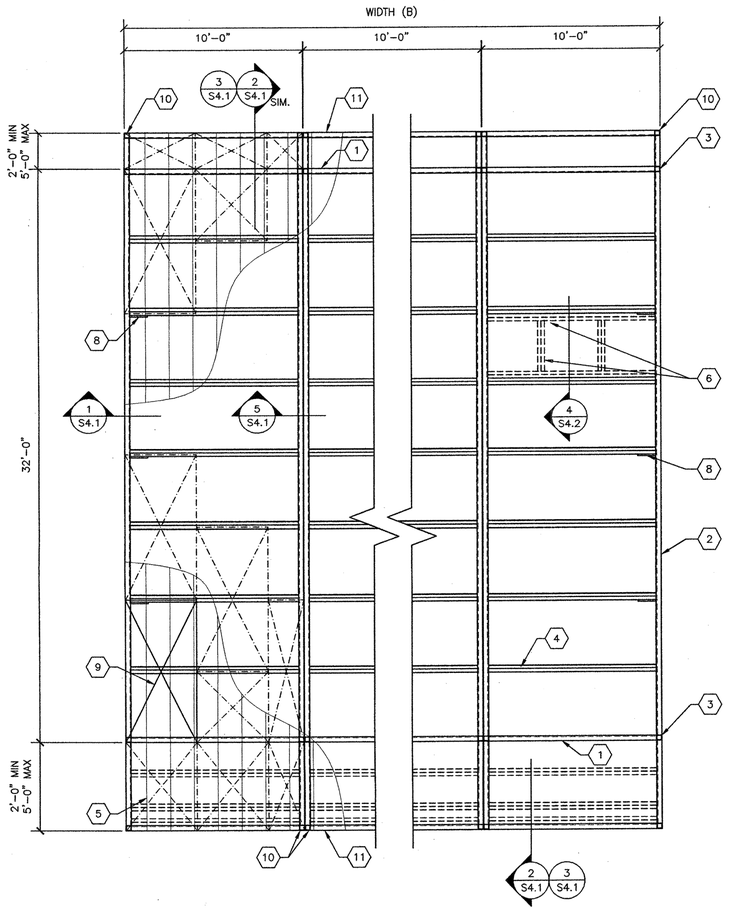

TYPICAL ROOF FRAMING PLAN (ENCLOSED SOFFIT) SCALE: 1/4"=1'-0" A

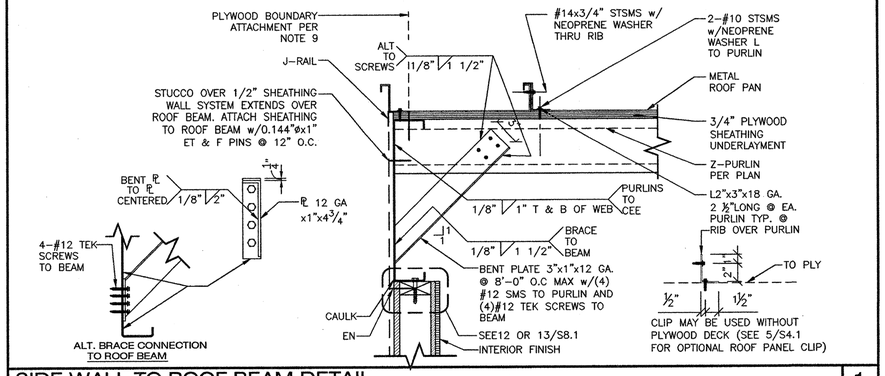

SIDE WALL TO ROOF BEAM DETAIL SCALE: 1 1/2"=1'-0" 1

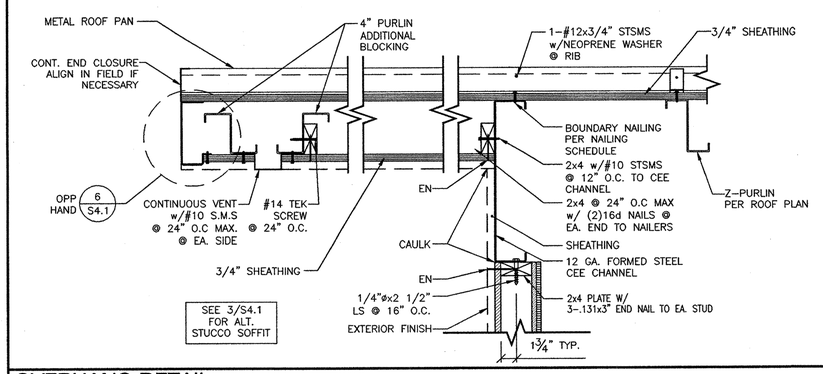

OVERHANG DETAIL SCALE: 1 1/2"=1'-0" 2

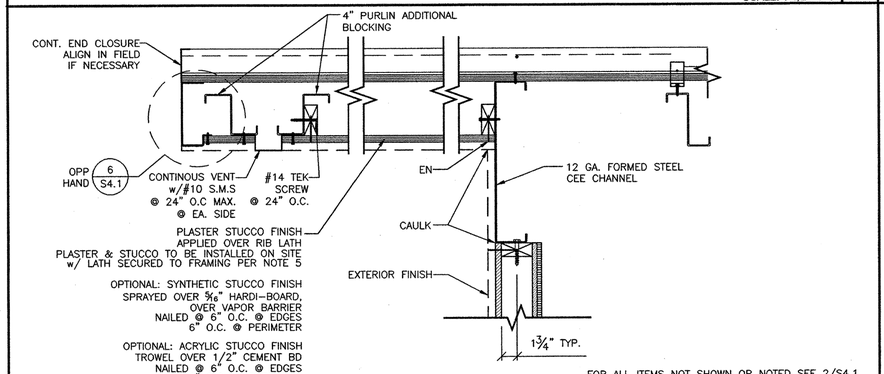

FOR ALL ITEMS NOT SHOWN OR NOTED SEE 2/S4.1

ALTERNATE OVERHANG DETAIL w/ STUCCO SOFFIT SCALE: 1 1/2"=1'-0" 3

BLDG SIZE (FT)	TOTAL # OF 10' WIDE MODULES	"A" TOTAL # OF CENTER MODULES	"B" TOTAL BLDG WIDTH
☐ 30' x 32'	3	1	30'-1/2"
☐ 40' x 32'	4	2	40'-3/4"
☐ 50' x 32'	5	3	50'-1"
☒ 60' x 32'	6	4	60'-1 1/4"
☐ 70' x 32'	7	5	70'-1 1/2"
☐ 80' x 32'	8	6	80'-1 3/4"
☐ 90' x 32'	9	7	90'-2"
☐ 100' x 32'	10	8	100'-2 1/4"
☐ 110' x 32'	11	9	110'-2 1/2"
☐ 120' x 32'	12	10	120'-2 3/4"
☐ 130' x 32'	13	11	130'-3"
☐ 140' x 32'	14	12	140'-3 1/4"
☐ 150' x 32'	15	13	150'-3 1/2"

MODULE SCHEDULE

SHEATHING FASTENING				
NAILING	0.144 PINS SPACING		# 10 SMS SPACING	
	TYPICAL	WITHIN 4' OF BUILDING CORNERS	TYPICAL	WITHIN 4' OF BUILDING CORNERS
BOUNDARY	6" O.C.	6" O.C.	6" O.C.	6" O.C.
EDGE	6" O.C.	6" O.C.	6" O.C.	6" O.C.
FIELD	12" O.C.	6" O.C.	12" O.C.	12" O.C.

ET&F 0.144 PINS PER PRELIMINARY ANALYSIS REPORT DATED 10/6/14 IAPMO REPORT PENDING.

FASTENING SPACING SCHEDULE

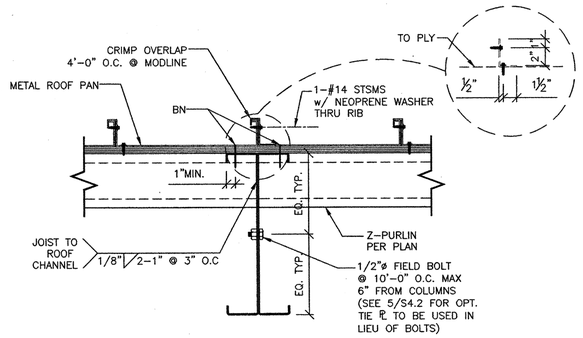

ROOF BEAM CONNECTION DETAIL SCALE: 1 1/2"=1'-0" 5

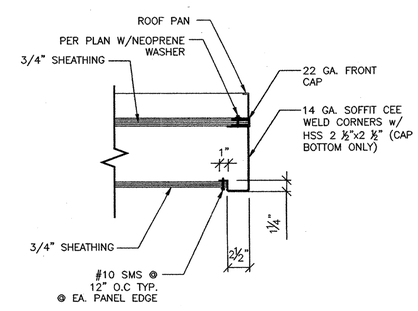

ENCLOSED SOFFIT DETAIL SCALE: N.T.S 6

KEY NOTES

1. THE MATERIAL THICKNESS OF LIGHT GAUGE STRUCTURAL MEMBERS, IN THEIR END-USE, SHALL MEET OR EXCEED THE MINIMUM BASE METAL THICKNESS SPECIFIED ON SHEET S0.0. THE MATERIAL GAGE DESIGNATION IN THE PLAN SHALL BE USED AS REFERENCE ONLY.
2. SEE SHEET S8.0 & S9.0 FOR TYP. SIDE WALL FRAMING.
3. SEE SHEET S8.0 & S9.0 FOR TYP. END WALL FRAMING.
4. ALL FASTENERS THRU METAL ROOF PANEL SHALL BE INSTALLED w/NEOPRENE WASHERS.
5. FOR PLASTER STUCCO FINISH @ SOFFIT, LATH SHALL BE SECURED PER THE FOLLOWING (CBC 2507.3):
   SECURE LATH TO ALTERNATE SUPPORTS WITH TIES CONSISTING OF A DOUBLE STRAND OF NO. 18 W & M GAGE GALVANIZED ANNEALED WIRE AT ONE EDGE OF EACH SHEET OF LATH. WIRE TIES SHALL BE INSTALLED NOT LESS THAN 3 INCHES (76MM) BACK FROM THE EDGE OF EACH SHEET AND SHALL BE LOOPED AROUND STRIPPING, OR ATTACHED TO A #8 SMS SCREW INTO EACH SIDE OF THE PURLIN – 2 INCHES (51MM) ABOVE THE BOTTOM OF THE PURLIN OR TO EACH END OF A #12 SMS DRIVEN HORIZONTALLY THROUGH THE PURLIN – 2 INCHES (51MM) ABOVE THE BOTTOM OF THE PURLIN AND THE ENDS OF THE WIRE SECURED TOGETHER WITH THREE TWISTS OF WIRE.

GENERAL NOTES

1 TRANSVERSE ROOF BEAM PER SHEET S5.0.

2 LONGITUDINAL ROOF BEAM PER SHEET S5.0.

3 HSS PER SCHEDULE SHEET S5.0.

4 'Z' FORMED ROOF PURLINS @ 48" O.C. SEE SHEET S0.0.

5 ROOF PAN – SEE SHEET S0.0. (ALT. 26 GA. ROOF PAN) IF OVER PLYWOOD

6 PROVIDE DOUBLE 6" PURLINS w/6" PURLIN BLKG PER 3/S4.2 @ OPTIONAL 600# HVAC.

7 PURLIN BLOCKING
WELD TO ROOF PURLINS PER DETAIL 3/S4.2. BLOCKING IS ONLY REQUIRED AT THE OUTSIDE MODULES @ PURLINS WITH BENT PLATE PER 8 BELOW

8 3"x1"x12 GA. BENT PLATE PER 1/S4.1 LOCATE AT PURLINS w/BLOCKING PER NOTE 7 ABOVE
(IF CROSS BRACING IS USED THEN REFER TO SHEET S4.0)

9 3/4" APA RATED L-P OSB SHEATHING OR 3/4" PLYWOOD (ALL SHEATHING SHALL BE EITHER T&G OR EDGE CLIP) COMPLY WITH DSA PA-062, CD EXPOSURE-1 48/24 SPAN INDEX, FACE GRAIN NORMAL TO ROOF PURLINS ROOF. SHTHG MAY BE REPLACED BY STRAP CROSS BRACING PER SHEET S4.0.
ALL BOUNDARY, EDGE & FIELD ATTACHMENTS SHALL BE 1"FROM EDGE OF PLYWOOD & EDGE OF STEEL SUPPORTING MEMBER. REFER TO FASTENING SCHEDULE.

10 2 1/2" SQ. HSS SOFFIT COLUMN – SEE 5/S5.0.

11 14 GA. FORMED STEEL SOFFIT CEE – SEE S0.0

12 ADDITIONAL BLOCKING FOR SOFFIT VENT

American Modular Systems
787 Spreckels Ave.Manteca, CA 95336
Phone (209) 825-1921 - Fax (209) 825-7018
americanmodular.com

MODULAR MANUFACTURER PROPRIETARY STATEMENT
THESE DRAWINGS AND THE MATERIAL CONTAINED THEREIN ARE THE PROPERTY OF AMERICAN MODULAR SYSTEMS, INC. (AMS) AND SHALL NOT BE REPRODUCED, COPIED OR OTHERWISE DISPOSED OF DIRECTLY OR INDIRECTLY AND SHALL NOT BE USED IN WHOLE OR IN PART TO ASSIST IN THE MAKING OF OR FOR THE PURPOSE OF FURNISHING ANY INFORMATION FOR THE MAKING OF DRAWINGS, PRINTS, APPARATUS OR PARTS THEREOF WITHOUT THE FULL KNOWLEDGE AND WRITTEN CONSENT OF AMS. ALL PATENTABLE MATERIAL CONTAINED HEREIN AND ORIGINATING WITH AMS SHALL BE THE SOLE PROPERTY OF AMS.

PRE-CHECKED SET NAME

30' x 32' THRU 150' x 32' BUILDINGS

SITE SPECIFIC PROJECT NAME

SHEET TITLE

ROOF FRAMING PLAN AND DETAILS (ENCLOSED SOFFIT OPTIONS)

MANUFACTURER PROFESSIONAL OF RECORD ON PC

LICENSED ARCHITECT RANDALL PATRICK CAVANAGH No. C12631 Ren. 03-31-17 STATE OF CALIFORNIA

REGISTERED PROFESSIONAL ENGINEER MANUEL D. FRANCISCO No. S3380 Exp.03/31/16 STRUCTURAL STATE OF CALIFORNIA

05/19/2015

PROJECT SPECIFIC STATE AGENCY APPROVAL

IDENTIFICATION STAMP DIV. OF THE STATE ARCHITECT 02 II 6495 AC – FLS – SS DSA DATE 12-18-2017

ORIGINAL PC STATE AGENCY APPROVAL

IDENTIFICATION STAMP DIV. OF THE STATE ARCHITECT CA. DEPT. OF GENERAL SERVICES PC 02-113921 AC FLS SS DATE 6/19/2015

PRE-CHECK (PC) DOCUMENT – CODE: 2013 CBC
A SEPARATE PROJECT APPLICATION FOR CONSTRUCTION IS REQUIRED

REVISIONS
1
2
3
4

DRAWN BY:
SCALE: AS NOTED
DATE:

SHEET NUMBER

S4.1

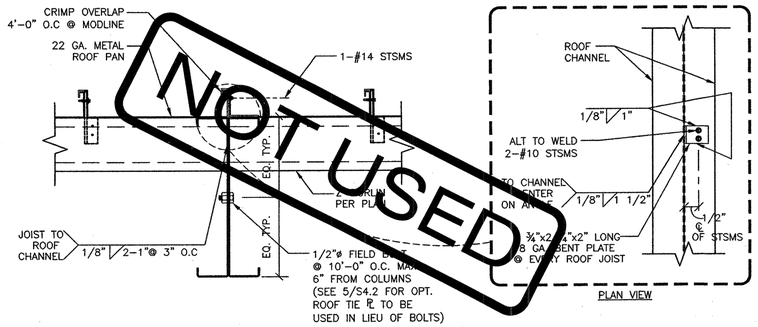

NOT USED

ROOF BEAM CONNECTION DETAIL SCALE: 1 1/2"=1'-0" | 1

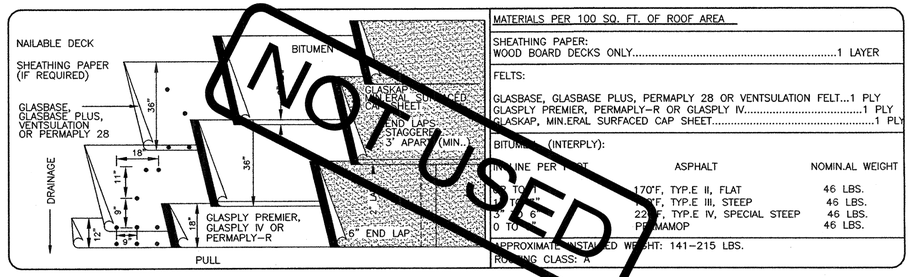

NOT USED

MATERIALS PER 100 SQ. FT. OF ROOF AREA		
SHEATHING PAPER: WOOD BOARD DECKS ONLY.....1 LAYER		
FELTS: GLASBASE, GLASBASE PLUS, PERMAPLY 28 OR VENTSULATION FELT...1 PLY GLASPLY PREMIER, PERMAPLY-R OR GLASPLY IV.....1 PLY GLASKAP, MIN.ERAL SURFACED CAP SHEET.....1 PLY		
BITUMEN (INTERPLY):		
[illegible] PER [illegible]	ASPHALT	NOMIN.AL WEIGHT
[illegible] TO [illegible]	170°F, TYP.E II, FLAT	46 LBS.
[illegible] TO [illegible]"	[illegible]°F, TYP.E III, STEEP	46 LBS.
3" TO 6	22[illegible]°F, TYP.E IV, SPECIAL STEEP	46 LBS.
0 TO	PERMAMOP	46 LBS.
APPROXIMATE INSTALLED WEIGHT: 141-215 LBS.		
ROOFING CLASS: A		

THREE PLY MIN.ERAL BUILT-UP ROOF SCALE: 1 1/2"=1'-0" | 2

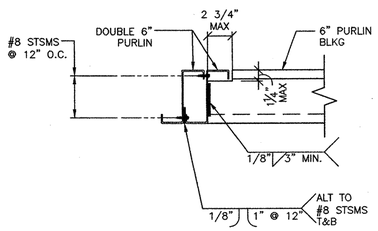

BLOCKING DETAIL SCALE: 1 1/2"=1'-0" | 3

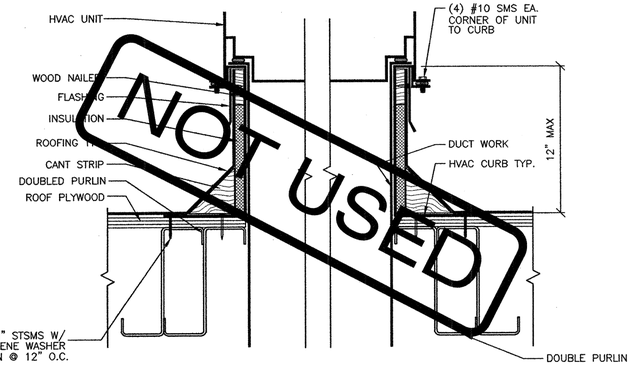

NOT USED

HVAC CURB DETAIL ANCHORAGE SCALE: 1 1/2"=1'-0" | 4

NOTE: REFER TO APPROVED PLANS FOR ADDITIONAL NOTES AND DETAILS

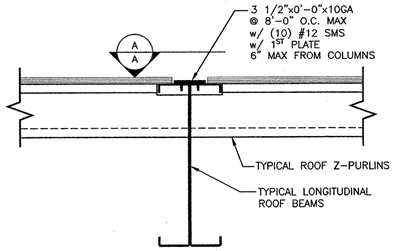

OPTIONAL ROOF TIE PLATE SCALE: 1 1/2"=1'-0" | 5

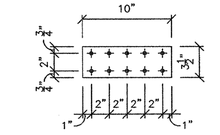

PLATE DETAIL

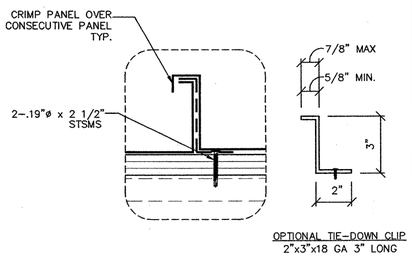

OPTIONAL TIE-DOWN CLIP
2"x3"x18 GA 3" LONG

NOTE:
MECHANICALLY CRIMP EACH STANDING SEAM ENTIRELY.
MECHANICALLY CRIMP PANELS OVER ALL CLIPS.

ROOF DETAIL (OPTIONAL ROOF PAN CLIP) | 6

NOT USED | 7

NOT USED | 8

NOT USED | 9

NOT USED | 10

NOT USED | 11

NOT USED | 12

NOT USED | 13

NOT USED | 14

GENERAL NOTES

AMS
American Modular Systems
787 Sprockels Ave.Manteca, CA 95336
Phone (209) 825-1921 - Fax (209) 825-7018
americanmodular.com

MODULAR MANUFACTURER PROPRIETARY STATEMENT

THESE DRAWINGS AND THE MATERIAL CONTAINED THEREIN ARE THE PROPERTY OF AMERICAN MODULAR SYSTEMS, INC. (AMS) AND SHALL NOT BE REPRODUCED, COPIED OR OTHERWISE DISPOSED OF DIRECTLY OR INDIRECTLY AND SHALL NOT BE USED IN WHOLE OR IN PART TO ASSIST IN THE MAKING OF OR FOR THE PURPOSE OF FURNISHING ANY INFORMATION FOR THE MAKING OF DRAWINGS, PRINTS, APPARATUS OR PARTS THEREOF WITHOUT THE FULL KNOWLEDGE AND WRITTEN CONSENT OF AMS. ALL PATENTABLE MATERIAL CONTAINED HEREIN AND ORIGINATING WITH AMS SHALL BE THE SOLE PROPERTY OF AMS.

PRE-CHECKED SET NAME

30' x 32' THRU 150' x 32' BUILDINGS

SITE SPECIFIC PROJECT NAME

SHEET TITLE

ROOF FRAMING DETAILS

MANUFACTURER PROFESSIONAL OF RECORD ON PC:

LICENSED ARCHITECT
RANDALL PATRICK GRAHAM
No. C12631
Ren. 08-31-17
STATE OF CALIFORNIA

REGISTERED PROFESSIONAL ENGINEER
D. FRENCH
No. 53380
Exp03/31/16
STRUCTURAL
STATE OF CALIFORNIA

05/19/2015

PROJECT SPECIFIC STATE AGENCY APPROVAL

IDENTIFICATION STAMP
DIV. OF THE STATE ARCHITECT
02 113405
AC — FLS 6 SS JDS
DATE 12-18-2017

ORIGINAL PC STATE AGENCY APPROVAL

IDENTIFICATION STAMP
DIV. OF THE STATE ARCHITECT
CA. DEPT. OF GENERAL SERVICES
PC 02-113921
AC FLS SS
DATE 6/19/2015

PRE-CHECK (PC) DOCUMENT - CODE: 2013 CBC
A SEPARATE PROJECT APPLICATION FOR CONSTRUCTION IS REQUIRED

REVISIONS

DRAWN BY:	
SCALE:	AS NOTED
DATE:	

SHEET NUMBER

S4.2

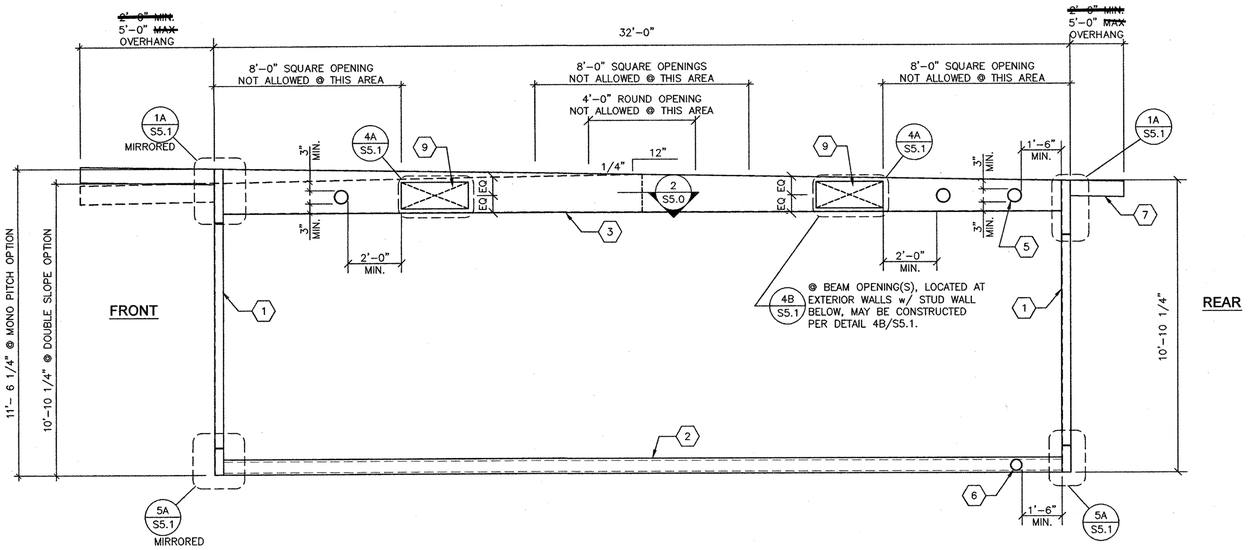

TYPICAL LONGITUDINAL FRAME ELEVATION

SCALE: 3/8"=1'-0"

1

KEY NOTES

1. HSS COLUMN – SEE SCHEDULE BELOW
2. FLOOR BEAM – SEE SCHEDULE BELOW
3. LONGITUDINAL ROOF BEAM – SEE SCHEDULE BELOW
   ~~14"–12" @ DOUBLE SLOPE TYPE~~
   14"–22" @ SINGLE SLOPE TYPE
4. TRANSVERSE ROOF BEAM – SEE SCHEDULE BELOW
   14" MIN. 22" MAX
5. 6" ø MAX OPENING IN WEB OF ROOF BEAM WITHOUT WEB REINFORCEMENT
   MINIMUM SPACING OF HOLES @ 48" O.C.
   HOLES MAY OCCUR @ ANY LOCATION ALONG LENGTH OF ROOF BEAM EXCEPT AS NOTED OTHERWISE ON FRAMING ELEVATION.–SEE 6/S5.1
   NOTE: IF HOLE IS 3" OR LESS THEY MAY BE SPACED @ 24"O.C. MINIMUM
6. 4" ø MAX OPENING IN WEB OF FLOOR BEAM WITHOUT WEB REINFORCEMENT
   MINIMUM SPACING OF HOLES @ 48" O.C.
   HOLES MAY OCCUR @ ANY LOCATION ALONG LENGTH OF FLOOR BEAM WITH DIRECT FOUNDATION SUPPORT BELOW. OPENINGS ARE NOT ALLOWED WHERE BEAMS ARE SPANNING BETWEEN FOUNDATIONS OR ACROSS VENT OPENINGS.–SEE 6/S5.1
   NOTE: IF HOLE IS 2" OR LESS THEY MAY BE SPACED 2 24" MINIMUM
7. 14 GA OUTRIGGER CHANNEL AT OPTIONAL ENCLOSED OVERHANG
   REFER TO DETAIL 1A/S5.1 & S5.0 FOR PROPERTIES
8. NOT USED
9. 10"x18" MAX OPENING
   REFER TO DETAIL 4A/S5.1 FOR OPENING REINFORCEMENT

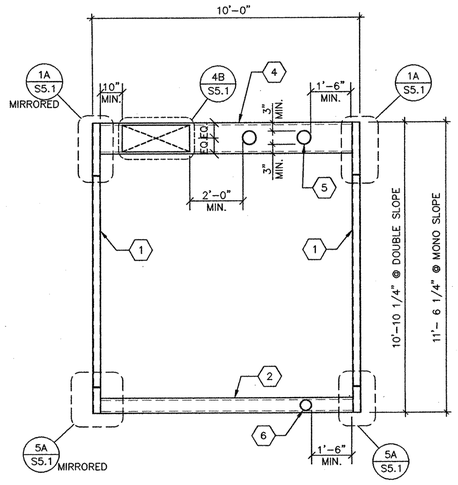

TYPICAL TRANSVERSE FRAME ELEVATION

SCALE : 3/8"=1'-0"

4

THE WELDING PROCEDURE QUALIFICATION TEST RECORD AND WELDING PROCEDURE SPECIFICATION FOR THIS WELD SHALL BE PREPARED IN ACCORDANCE WITH AWS D1.3–08 AND SUBMITTED TO THE STRUCTURAL ENGINEER FOR REVIEW AND SUBMITTAL TO THE D.S.A. TYPICAL ALL DETAILS THIS SHEET. ALL WELDS USED IN PRIMARY MEMBERS AND CONNECTIONS IN THE LATERAL FORCE–RESISTING SYSTEMS SHALL BE MADE WITH FILLER METAL THAT HAS A MINIMUM CHARPY V–NOTCH TOUGHNESS OF 20 FT.–LBS AT ZERO DEGREES F, AS DETERMINED BY AWS CLASSIFICATION.

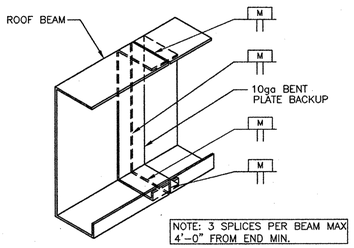

TYPICAL BEAM SLICE

SCALE: 1 1/2"=1'-0"

2

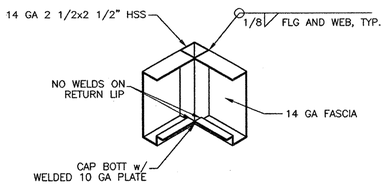

OVERHANG CORNER DETAIL

SCALE: 1 1/2"=1'-0"

5

FRAME MEMBER SCHEDULE

3A

FLOOR BEAMS		ALT. FLOOR BEAMS		COLUMNS	LONGITUDINAL ROOF CHANNEL	TRANSVERSE ROOF CHANNEL
~~PLYWOOD FLOOR~~	STRUCTO–CRETE OR CONCRETE FLOOR	~~PLYWOOD FLOOR~~	STUCTO–CRETE OR CONC FLOOR			
~~C7x9.8~~	C9x13.4 (36 KSI)	~~C9x13.4 (36 KSI) C10x15.3~~	C10x15.3	HSS 4x4x5/16	10GA	12GA

NOTE:
ALL SECTION PROPERTIES ON SHEET S0.0

MODULE SCHEDULE

BLDG SIZE (FT)	TOTAL # OF 10' WIDE MODULES	"A" TOTAL # OF CENTER MODULES	"B" TOTAL BLDG WIDTH
☐ 30' x 32'	3	1	30'–1/2"
☐ 40' x 32'	4	2	40'–3/4"
☐ 50' x 32'	5	3	50'–1"
☒ 60' x 32'	6	4	60'–1 1/4"
☐ 70' x 32'	7	5	70'–1 1/2"
☐ 80' x 32'	8	6	80'–1 3/4"
☐ 90' x 32'	9	7	90'–2"
☐ 100' x 32'	10	8	100'–2 1/4"
☐ 110' x 32'	11	9	110'–2 1/2"
☐ 120' x 32'	12	10	120'–2 3/4"
☐ 130' x 32'	13	11	130'–3"
☐ 140' x 32'	14	12	140'–3 1/4"
☐ 150' x 32'	15	13	150'–3 1/2"

AMS
American Modular Systems
787 Spreckels Ave.Manteca, CA 95336
Phone (209) 825-1921 - Fax (209) 825-7018
americanmodular.com

MODULAR MANUFACTURER PROPRIETARY STATEMENT

THESE DRAWINGS AND THE MATERIAL CONTAINED THEREIN ARE THE PROPERTY OF AMERICAN MODULAR SYSTEMS, INC. (AMS) AND SHALL NOT BE REPRODUCED, COPIED OR OTHERWISE DISPOSED OF DIRECTLY OR INDIRECTLY AND SHALL NOT BE USED IN WHOLE OR IN PART TO ASSIST IN THE MAKING OF OR FOR THE PURPOSE OF FURNISHING ANY INFORMATION FOR THE MAKING OF DRAWINGS, PRINTS, APPARATUS OR PARTS THEREOF WITHOUT THE FULL KNOWLEDGE AND WRITTEN CONSENT OF AMS. ALL PATENTABLE MATERIAL CONTAINED HEREIN AND ORIGINATING WITH AMS SHALL BE THE SOLE PROPERTY OF AMS.

PRE–CHECKED SET NAME

30' x 32' THRU 150' x 32' BUILDINGS

SITE SPECIFIC PROJECT NAME

SHEET TITLE

MOMENT FRAME ELEVATIONS

MANUFACTURER PROFESSIONAL OF RECORD ON PC

LICENSED ARCHITECT RANDALL PATRICK CAVANAGH No. C12631 Ren. 08-31-17 STATE OF CALIFORNIA

REGISTERED PROFESSIONAL ENGINEER MANUEL D. FRANCO No. S-3380 Exp:03/31/16 STRUCTURAL STATE OF CALIFORNIA

05/19/2015

PROJECT SPECIFIC STATE AGENCY APPROVAL

IDENTIFICATION STAMP DIV. OF THE STATE ARCHITECT
02 116495
AC – FLS – SS
DATE 12-18-2017

ORIGINAL PC STATE AGENCY APPROVAL

IDENTIFICATION STAMP DIV. OF THE STATE ARCHITECT CA. DEPT. OF GENERAL SERVICES
PC 02–113921
AC. FLS SS
DATE 6/19/2015

PRE–CHECK (PC) DOCUMENT – CODE: 2013 CBC
A SEPARATE PROJECT APPLICATION FOR CONSTRUCTION IS REQUIRED

REVISIONS

1.
2.
3.
4.

DRAWN BY:
SCALE: AS NOTED
DATE:

SHEET NUMBER

S5.0

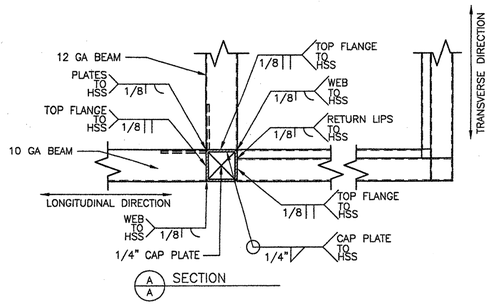

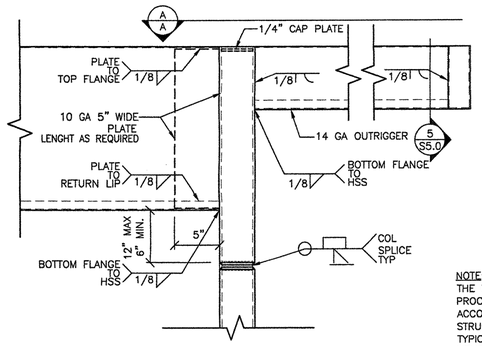

NOTE: LONGITUDINAL ROOF BEAM SHOWN
TRANSVERSE ROOF BEAM SIMILAR

NOTE:
THE WELDING PROCEDURE QUALIFICATION TEST RECORD AND WELDING PROCEDURE SPECIFICATION FOR THIS WELD SHALL BE PREPARED IN ACCORDANCE WITH AWS D1-10 & AWS D1.3-08 SUBMITTED TO THE STRUCTURAL ENGINEER FOR REVIEW AND SUBMITTAL TO THE D.S.A. TYPICAL ALL DETAILS THIS SHEET. ALL WELDS USED IN PRIMARY MEMBERS AND CONNECTIONS IN THE LATERAL FORCE-RESISTING SYSTEMS SHALL BE MADE WITH FILLER METAL THAT HAS A MINIMUM CHARPY V-NOTCH TOUGHNESS OF 20 FT.-LBS AT ZERO DEGREES F, AS DETERMINED BY AWS CLASSIFICATION.

TYPICAL ROOF CHANNEL TO HSS DETAIL

SCALE: 1 1/2"=1'-0" | 1A

NOT USED

1B

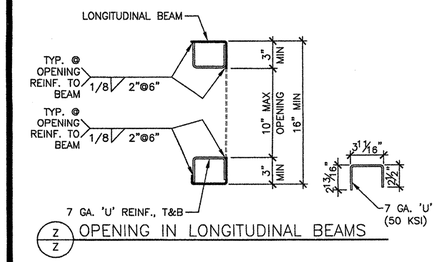

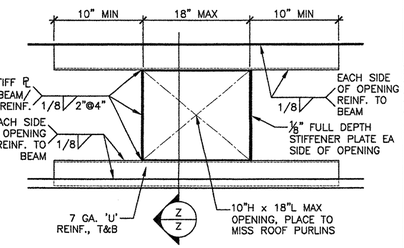

NOTES:

1. LOCATE DIAGONAL BRACE (SEE 1/S4.1) AT PURLINS CLOSEST TO EACH SIDE OF BEAM OPENING, TYP.
2. BEAM OPENING(S), LOCATED AT EXTERIOR WALLS w/ STUD WALL BELOW, MAY BE CONSTRUCTED PER DETAIL 4B/S5.1.

OPENING @ ROOF BEAMS LONGITUDINAL BEAMS

SCALE: 1 1/2"=1'-0" | 4A

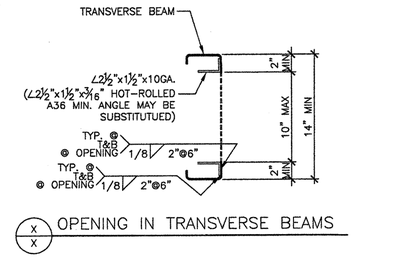

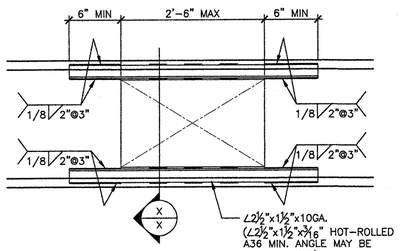

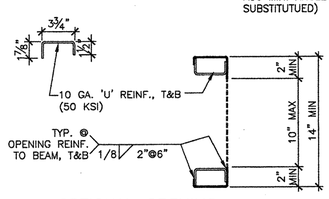

OPENING @ ROOF BEAMS TRANSVERSE BEAMS

SCALE: 1 1/2"=1'-0" | 4B

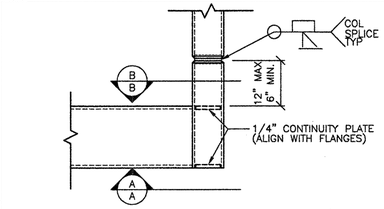

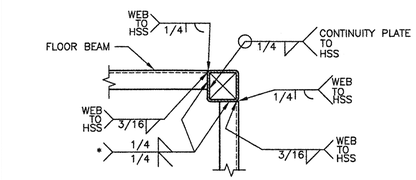

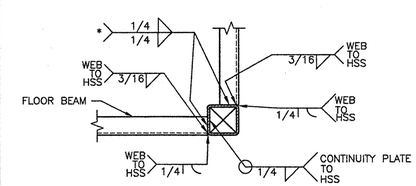

TYP. CORNER TO FLOOR BEAM DETAIL

SCALE: 1 1/2"=1'-0" | 5A

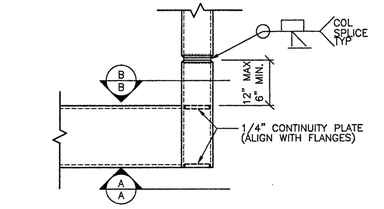

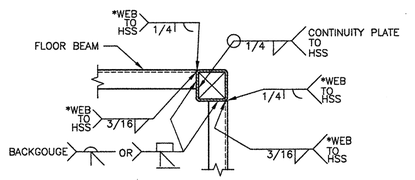

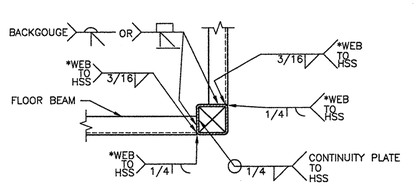

ALTERNATE CORNER DETAIL

SCALE: 1 1/2"=1'-0" | 5B

1. FILLER METALS SHALL CONFORM TO THE REQUIREMENTS OF THE AISC SEISMIC PROVISIONS.
2. WELDING PROCEDURES SHALL BE IN ACCORDANCE WITH THE AISC SEISMIC PROVISIONS.
3.
4.
5.
6.
7.
8.
9. QUALITY CONTROL AND QUALITY ASSURANCE SHALL BE IN ACCORDANCE WITH THE AISC SEISMIC PROVISIONS.
10. WELD ACCESS HOLES SHALL BE IN ACCORDANCE WITH AISC 360-10, SECTION J1.6, AND SHALL BE CONSTRUCTED PER THE FOLLOWING DETAILS & NOTES.

WELD ACCESS HOLE GEOMETRY

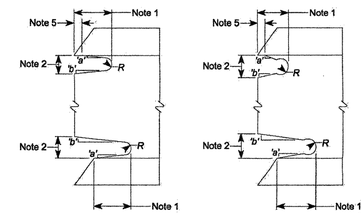

NOTES: THESE ARE TYPICAL DETAILS FOR JOINTS WELDED FROM ONE SIDE AGAINST STEEL BACKING WHERE WELD ACCESS HOLES ARE REQUIRED.

1) LENGTH: GREATER OF 1.5tw OR 1-1/2 IN. (38 MM)
2) HEIGHT: GREATER OF 1.0tw OR 3/4 IN. (19 MM) BUT NEED NOT EXCEED 2 IN. (50 MM)
3) R: 3/8 IN. MIN. (10 MM). GRIND THE THERMALLY CUT SURFACES OF WELD ACCESS HOLES IN HEAVY SHAPES AS DEFINED IN SECTIONS A3.1(c) AND (d) OF AISC 360-10.
4) SLOPE 'a' FORMS A TRANSITION FROM THE WEB TO THE FLANGE. SLOPE 'b' MAY BE HORIZONTAL.
5) THE BOTTOM OF THE TOP FLANGE IS TO BE CONTOURED TO PERMIT THE TIGHT FIT OF BACKING BARS WHERE THEY ARE TO BE USED.

REQ. FOR FR MOMENT CONNECTIONS

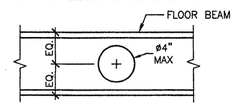

4" OPENING IN FLOOR BEAM

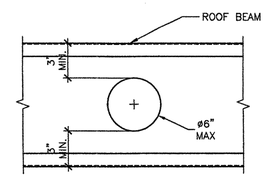

6" OPENING IN ROOF BEAM

OPENING IN BEAMS

SCALE: 1 1/2"=1'-0" | 6

American Modular Systems
787 Spreckels Ave.Manteca, CA 95336
Phone (209) 825-1921 - Fax (209) 825-7018
americanmodular.com

MODULAR MANUFACTURER PROPRIETARY STATEMENT

THESE DRAWINGS AND THE MATERIAL CONTAINED THEREIN ARE THE PROPERTY OF AMERICAN MODULAR SYSTEMS, INC. (AMS) AND SHALL NOT BE REPRODUCED, COPIED OR OTHERWISE DISPOSED OF DIRECTLY OR INDIRECTLY AND SHALL NOT BE USED IN WHOLE OR IN PART TO ASSIST IN THE MAKING OF OR FOR THE PURPOSE OF FURNISHING ANY INFORMATION FOR THE MAKING OF DRAWINGS, PRINTS, APPARATUS OR PARTS THEREOF WITHOUT THE FULL KNOWLEDGE AND WRITTEN CONSENT OF AMS. ALL PATENTABLE MATERIAL CONTAINED HEREIN AND ORIGINATING WITH AMS SHALL BE THE SOLE PROPERTY OF AMS.

PRE-CHECKED SET NAME

30' x 32' THRU 150' x 32' BUILDINGS

SITE SPECIFIC PROJECT NAME

SHEET TITLE

MOMENT FRAME CONNECTION DETAILS

MANUFACTURER PROFESSIONAL OF RECORD ON PC

LICENSED ARCHITECT RANDALL PATRICK GRAHAM No. C12631 Ren. 03-31-17 STATE OF CALIFORNIA

REGISTERED PROFESSIONAL ENGINEER RANDY D. FRUM No. S3360 STATE OF CALIFORNIA CIVIL

11/17/2015

PROJECT SPECIFIC STATE AGENCY APPROVAL

IDENTIFICATION STAMP DIV. OF THE STATE ARCHITECT OS 116495 AC - FLS - SS - DATE 12-18-2017

ORIGINAL PC STATE AGENCY APPROVAL

IDENTIFICATION STAMP DIV. OF THE STATE ARCHITECT CA. DEPT. OF GENERAL SERVICES PC 02-113921 Revision 2 AC FLS SS DATE 12/2/2015

PRE-CHECK (PC) DOCUMENT - CODE: 2013 CBC
A SEPARATE PROJECT APPLICATION FOR CONSTRUCTION IS REQUIRED

REVISIONS

1
2
3
4

DRAWN BY:
SCALE: AS NOTED
DATE:

SHEET NUMBER

S5.1

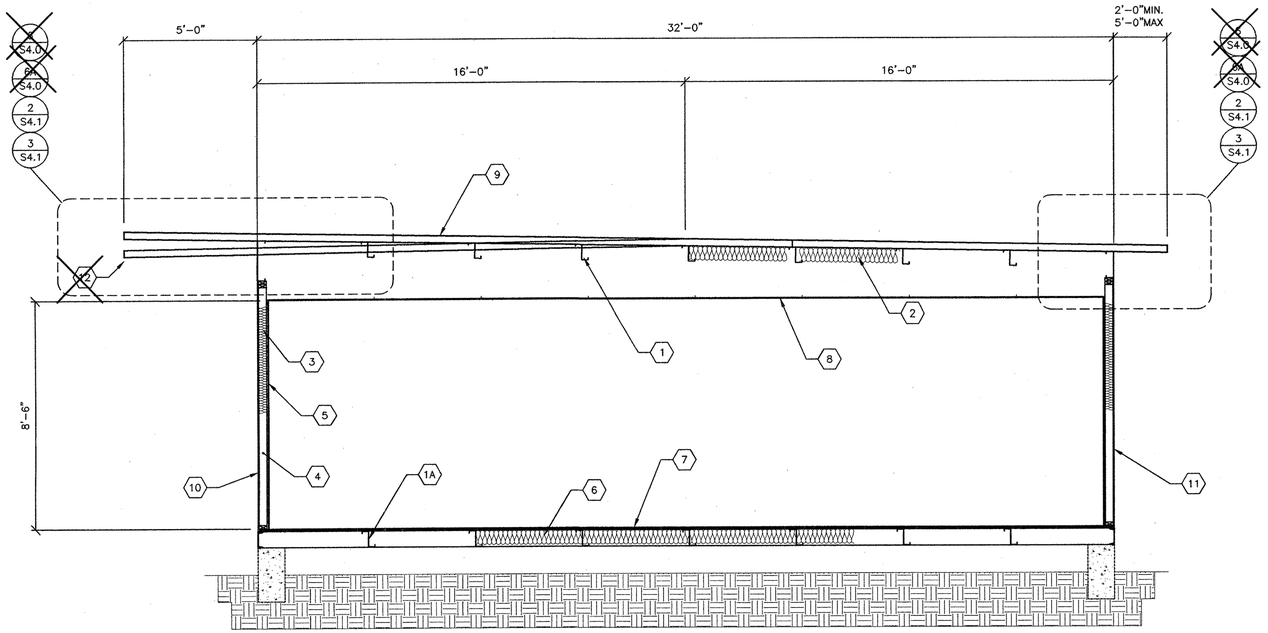

TYPICAL LONGITUDINAL SECTION-MONO/~~DUAL~~ PITCH

SCALE: 3/8"=1'-0"

A

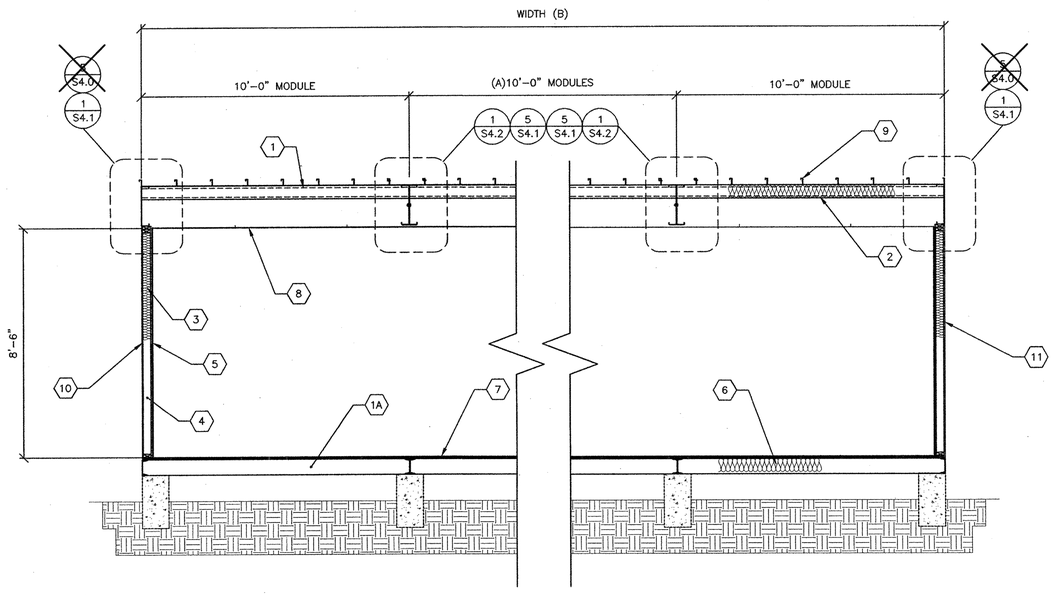

TYPICAL TRANSVERSE SECTION-MONO/DUAL PITCH

SCALE: 3/8"=1'-0"

B

KEY NOTES

1. "Z" PURLINS @ 48" O.C.
1A. STEEL "Z" FLOOR JOISTS
2. R-19 INSULATION w/22 GA WIRE @ 16" O.C.
3. INSULATION w/KRAFT PAPER
4. WALL STUDS PER SHEETS S8.0 & S9.0
5. VINYL FABRIC OVER TACKABLE BACKING PANELS
6. INSULATION w/KRAFT PAPER AND CHICKEN WIRE
7. PLYWOOD FLOOR PER SHEETS S3.0
8. SUSPENDED T-BAR CEILING
9. METAL ROOF PANELS SEE ROOF FRAMING PLAN
10. TYPICAL PLYWOOD NAILING .131x2¼" GALV NAILS @ 6" O.C. PANEL EDGES (ALL EDGES BLOCKED) & .131x2¼" GALV NAILS @ 12" O.C. FIELD
11. EXTERIOR WALL FINISH PER EXTERIOR ELEVATIONS
12. ~~ALTERNATE DUAL PITCH~~

MODULE SCHEDULE

BLDG SIZE (FT)	TOTAL # OF 10' WIDE MODULES	"A" TOTAL # OF CENTER MODULES	"B" TOTAL BLDG WIDTH
☐ 30' x 32'	3	1	30'-1/2"
☐ 40' x 32'	4	2	40'-3/4"
☐ 50' x 32'	5	3	50'-1"
☒ 60' x 32'	6	4	60'-1 1/4"
☐ 70' x 32'	7	5	70'-1 1/2"
☐ 80' x 32'	8	6	80'-1 3/4"
☐ 90' x 32'	9	7	90'-2"
☐ 100' x 32'	10	8	100'-2 1/4"
☐ 110' x 32'	11	9	110'-2 1/2"
☐ 120' x 32'	12	10	120'-2 3/4"
☐ 130' x 32'	13	11	130'-3"
☐ 140' x 32'	14	12	140'-3 1/4"
☐ 150' x 32'	15	13	150'-3 1/2"

American Modular Systems
787 Spreckels Ave.Manteca, CA 95336
Phone (209) 825-1921 - Fax (209) 825-7018
americanmodular.com

MODULAR MANUFACTURER PROPRIETARY STATEMENT

THESE DRAWINGS AND THE MATERIAL CONTAINED THEREIN ARE THE PROPERTY OF AMERICAN MODULAR SYSTEMS, INC. (AMS) AND SHALL NOT BE REPRODUCED, COPIED OR OTHERWISE DISPOSED OF DIRECTLY OR INDIRECTLY AND SHALL NOT BE USED IN WHOLE OR IN PART TO ASSIST IN THE MAKING OF OR FOR THE PURPOSE OF FURNISHING ANY INFORMATION FOR THE MAKING OF DRAWINGS, PRINTS, APPARATUS OR PARTS THEREOF WITHOUT THE FULL KNOWLEDGE AND WRITTEN CONSENT OF AMS. ALL PATENTABLE MATERIAL CONTAINED HEREIN AND ORIGINATING WITH AMS SHALL BE THE SOLE PROPERTY OF AMS.

PRE-CHECKED SET NAME

30' x 32' THRU 150' x 32' BUILDINGS

SITE SPECIFIC PROJECT NAME

SHEET TITLE

TYPICAL LONGITUDINAL AND TRANSVERSE FRAME ELEVATION

MANUFACTURER PROFESSIONAL OF RECORD ON PC

LICENSED ARCHITECT RANDALL PATRICK CANAVAN No. C12631 Ren. 10-31-17 STATE OF CALIFORNIA

REGISTERED PROFESSIONAL ENGINEER Manuel D. Faria No. 53380 Exp.03/31/16 STRUCTURAL STATE OF CALIFORNIA

05/19/2015

PROJECT SPECIFIC STATE AGENCY APPROVAL

IDENTIFICATION STAMP DIV. OF THE STATE ARCHITECT 02 116495 AC - FLS - SS DATE 12-18-2017

ORIGINAL PC STATE AGENCY APPROVAL

IDENTIFICATION STAMP DIV. OF THE STATE ARCHITECT CA. DEPT. OF GENERAL SERVICES PC 02-113921 AC FLS SS DATE 6/19/2015

PRE-CHECK (PC) DOCUMENT - CODE: 2013 CBC
A SEPARATE PROJECT APPLICATION FOR CONSTRUCTION IS REQUIRED

REVISIONS

1
2
3
4

DRAWN BY:

SCALE: AS NOTED

DATE:

SHEET NUMBER

S6.0

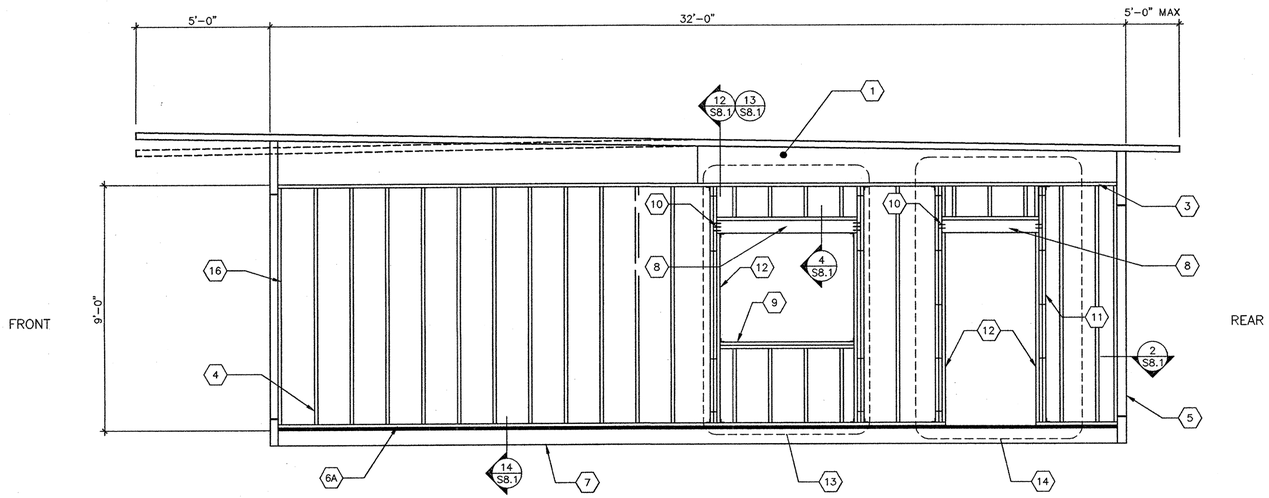

NOTE:
SEE S9.0 FOR ALTERNATE STEEL STUD WALL FRAMING

KEY NOTES

1. ROOF HEADER
2. 2x4 PLATE NO SPLICE
3. 2x4 PLATE
4. 2x4 STUDS SPACED PER SCHEDULE w/(3) 0.131"ø x3" END NAILS OR (4) 0.131"ø x3" TOE NAILS T&B TO PLATES TYP.
5. HSS COLUMN
6. 2x4 BOTTOM PLATE P.T. AT CONCRETE FLOORS
6A. 2x4 BOTTOM PLATE P.T. AT CONCRETE FLOORS
7. PERIMETER FLOOR BEAM
8. HEADER PER SCHEDULE AND DETAIL 4/S8.1
9. WINDOW SILL PER SCHEDULE
10. END NAILS THROUGH KING STUD TO HEADER OR SILL PER SCHEDULE
11. KING STUDS PER SCHEDULE
12. 2x4 TRIMMER
13. OPTIONAL WINDOW OPENING FRAMING PER SCHEDULE (REFER TO 4/S8.0 FOR DETAILS AND FLOOR PLANS FOR LOCATIONS)
14. OPTIONAL DOOR OPENING FRAMING PER SCHEDULE (REFER TO 5/S8.0 FOR DETAILS AND FLOOR PLANS FOR LOCATIONS)
15. HVAC OPENING @ INDOOR UNIT
15A. HVAC OPENING @ EXTERIOR WALL
16. 2x NAILER

NOTE:
SEE CARPENTRY NOTES SHEET N1.0 SECTION 6 FOR WOOD SPECIES AND GRADE

TYPICAL SIDE WALL FRAMING (MONO/DUAL PITCH)

SCALE: 3/8" = 1'-0" A

TYP. END WALL FRAMING w/ NO OPENINGS 1

SCALE: 1/4"=1'-0"

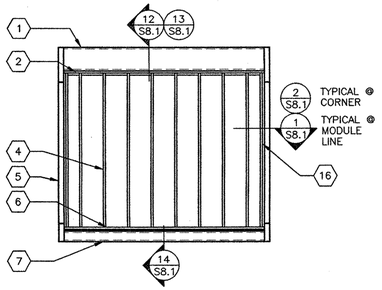

NOTE:
SEE S9.0 FOR ALTERNATE STEEL STUD WALL FRAMING

TYP. END WALL FRAMING w/INDOOR HVAC UNIT OPTIONAL 2

SCALE: 1/4"=1'-0"

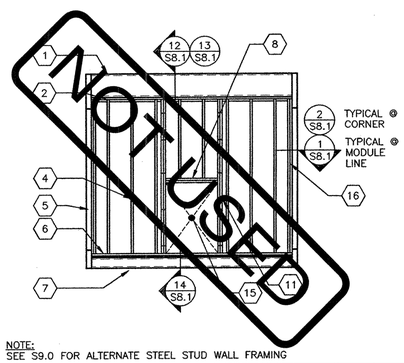

NOTE:
SEE S9.0 FOR ALTERNATE STEEL STUD WALL FRAMING

TYP. END WALL FRAMING w/ WALL HUNG HVAC UNIT OPTIONAL 3

SCALE: 1/4"=1'-0"

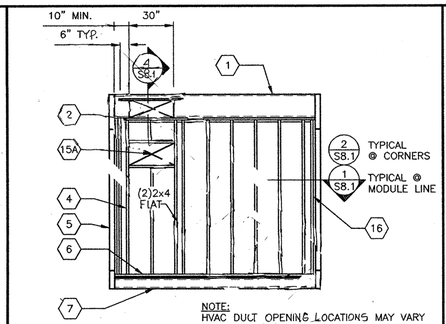

NOTE:
HVAC DUCT OPENING LOCATIONS MAY VARY ANYWHERE ALONG 12 GA. CEE MEMEBER. (EXCEPT AS SHOWN ABOVE)
SEE SHEET 1 FOR OPENING LOCATION

NOTE:
SEE S9.0 FOR ALTERNATE STEEL STUD WALL FRAMING

TYPICAL END WALL FRAMING w/ WINDOW 4

SCALE: 1/4"=1'-0"

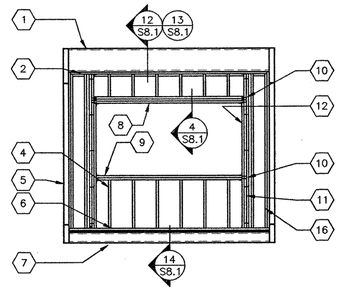

NOTE:
SEE S9.0 FOR ALTERNATE STEEL STUD WALL FRAMING

TYPICAL END WALL FRAMING w/ DOOR 5

SCALE: 1/4"=1'-0"

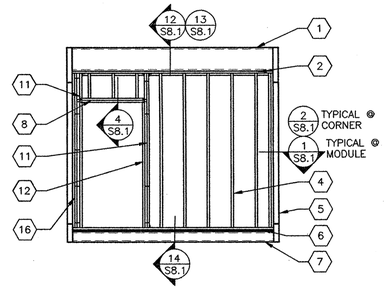

NOTE:
SEE S9.0 FOR ALTERNATE STEEL STUD WALL FRAMING

EXTERIOR WALL FINISH/WALL STUD SCHEDULE

FINISH TYPE	FOUNDATION TYPE	WALL FINISH COMMENTS	STUD TYPE	STUD SPACING TYPICAL	STUD SPACING @ CORNERS
5/8" PLYWOOD SHEATHING 303 CONFORMING TO PS1-09, VERTICAL GROOVES @ 8" O.C.	WOOD OR CONCRETE	WALL FINISH PER A5.1 ~~JOINT DETAIL SEE 15/S8.1~~ NAILING PER BLDG SECTIONS	HEM FIR #2 DOUG FIR #2	@ 16" O.C. @ 16" O.C.	@ 16" O.C. @ 16" O.C.
3/8" HARDIBOARD WITH SYNTHETIC STUCCO 3/8" HARDI-LAP SIDING	WOOD OR CONCRETE	PER SHEETS A5.5 & A5.7	HEM FIR #2 DOUG FIR #2	@ 16" O.C. @ 16" O.C.	@ 16" O.C. @ 16" O.C.
~~1/2" PLYWOOD SHEATHING CONFORMING TO PS1-09, APA RATED, 5 PLY 32/16, OR 1/2" O.S.B. PANELS EXPOSURE 1 WITH 7/8" STUCCO~~	CONCRETE ONLY	WALL FINISH PER A5.3 ~~NAILING PER BLDG SECTIONS~~	~~HEM FIR #2~~ DOUG FIR #2	~~@ 16" O.C.~~ @ 16" O.C.	@ 16" O.C. @ 16" O.C.

1. ALL NAILS IN EXTERIOR APPLICATIONS TO BE GALVANIZED.
2. BUILDING CORNERS ARE DEFINED AS A DISTANCE OF 4 FEET IN BOTH DIRECTIONS FROM EACH CORNER OF THE BUILDING.
3. TYPICAL PLYWOOD NAILING WHERE OCCURS .131x2 1/4" GALV @ 6" O.C E.N. & 12" O.C. F.N. (ALL EDGES BLOCKED)

OPENING SCHEDULE

~~DOOR/WINDOW OPENINGS AT TYPICAL WALL~~ (NO STUCCO)

OPENING	HEADER	WINDOW SILLS	KING STUDS[1]	KING STUDS INTERNAILING SPACING W/0.131x3" NAILS STAGGERED	HEADER TO KING STUDS NAILS	SILL TO KING STUDS NAILS
8'-0" UP TO 10'-0"	(4) 2x4	(2) 2x4	3	~~16" O.C. MAX~~	6	5
6'-0" UP TO 8'-0"	(3) 2x4	(2) 2x4	2	20" O.C. MAX	5	4
3'-0" UP TO 6'-0"	(3) 2x4	(2) 2x4	2	20" O.C. MAX	4	3
3'-0" OR LESS	(3) 2x4	(2) 2x4	2	20" O.C. MAX	3	~~2~~

DOOR/WINDOW OPENINGS AT STUCCO WALLS

OPENING	HEADER	WINDOW SILLS	KING STUDS[1]	KING STUDS INTERNAILING SPACING W/0.131x3" NAILS STAGGERED	HEADER TO KING STUDS NAILS	SILL TO KING STUDS NAILS
8'-0" UP TO 10'-0"	(4) 2x4	(4) 2x4	4	16" O.C. MAX	6	6
6'-0" UP TO 8'-0"	(3) 2x4	(2) 2x4	3	16" O.C. MAX	5	4
3'-0" UP TO 6'-0"	(3) 2x4	(2) 2x4	3	16" O.C. MAX	4	3
3'-0" OR LESS	(3) 2x4	(2) 2x4	2	16" O.C. MAX	3	3

1. PROVIDE (2) SIMPSON A34'S T&B OF KING STUDS TO PLATES FOR OPENINGS GREATER THAN 3'-0".
   PROVIDE (1) SIMPSON A34'S T&B OF KING STUDS TO PLATES FOR OPENING 3'-0" OR LESS.
2. WHEN MORE THAN A SINGLE SILL PLATE IS REQUIRED, INTERNAIL w/ 0.131 ø x 3" NAILS @ 12" O.C STAGGERED.
3. BUILDING CORNERS ARE DEFINED AS A DISTANCE OF 4 FEET IN BOTH DIRECTIONS FROM EACH CORNER OF THE BUILDING.

American Modular Systems
787 Sprockels Ave.Manteca, CA 95336
Phone (209) 825-1921 - Fax (209) 825-7018
americanmodular.com

MODULAR MANUFACTURER PROPRIETARY STATEMENT

THESE DRAWINGS AND THE MATERIAL CONTAINED THEREIN ARE THE PROPERTY OF AMERICAN MODULAR SYSTEMS, INC. (AMS) AND SHALL NOT BE REPRODUCED, COPIED OR OTHERWISE DISPOSED OF DIRECTLY OR INDIRECTLY AND SHALL NOT BE USED IN WHOLE OR IN PART TO ASSIST IN THE MAKING OF OR FOR THE PURPOSE OF FURNISHING ANY INFORMATION FOR THE MAKING OF DRAWINGS, PRINTS, APPARATUS OR PARTS THEREOF WITHOUT THE FULL KNOWLEDGE AND WRITTEN CONSENT OF AMS. ALL PATENTABLE MATERIAL CONTAINED HEREIN AND ORIGINATING WITH AMS SHALL BE THE SOLE PROPERTY OF AMS.

PRE-CHECKED SET NAME

30' x 32' THRU 150' x 32' BUILDINGS

SITE SPECIFIC PROJECT NAME

SHEET TITLE

WALL FRAMING ELEVATIONS

MANUFACTURER PROFESSIONAL OF RECORD ON PC

LICENSED ARCHITECT RANDALL PATRICK CANNAGH No. C12631 Ren. 03-31-17 STATE OF CALIFORNIA

REGISTERED PROFESSIONAL ENGINEER Mario D. Franco No. S3380 Exp.03/31/16 STRUCTURAL STATE OF CALIFORNIA

05/19/2015

PROJECT SPECIFIC STATE AGENCY APPROVAL

IDENTIFICATION STAMP DIV. OF THE STATE ARCHITECT
02 116495
AC — FLS — SS
DATE 12-18-2017

ORIGINAL PC STATE AGENCY APPROVAL

IDENTIFICATION STAMP DIV. OF THE STATE ARCHITECT CA. DEPT. OF GENERAL SERVICES
PC 02-113921
AC — FLS — SS
DATE 6/19/2015

PRE-CHECK (PC) DOCUMENT — CODE: 2013 CBC
A SEPARATE PROJECT APPLICATION FOR CONSTRUCTION IS REQUIRED

REVISIONS

DRAWN BY:
SCALE: AS NOTED
DATE:

SHEET NUMBER

S8.0

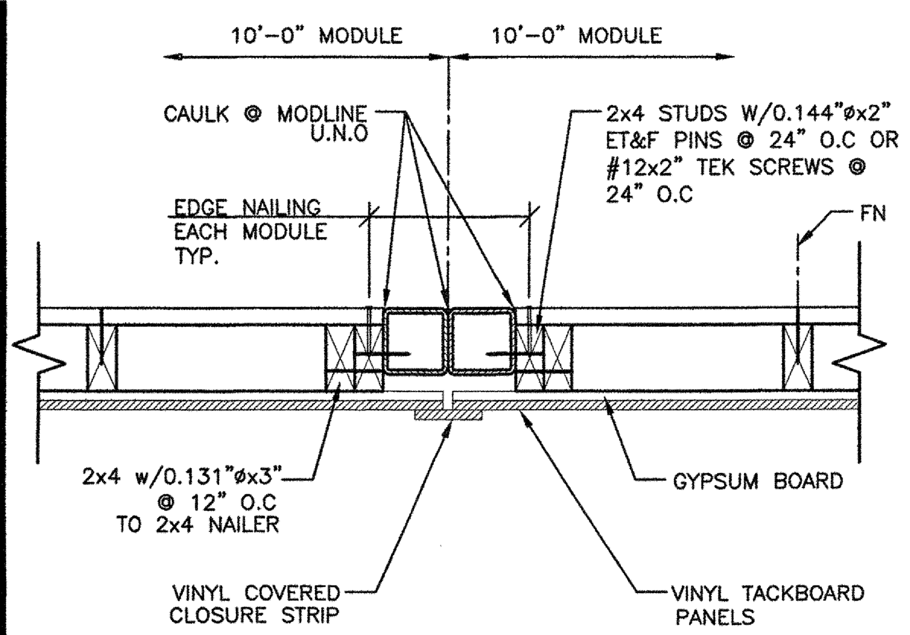

WALL TO COLUMN TYP. DETAIL @ MODLINES | 1
FOR COLUMN LOCATION REFER TO ARCH. DETAILS SCALE: 1 1/2"=1'-0"

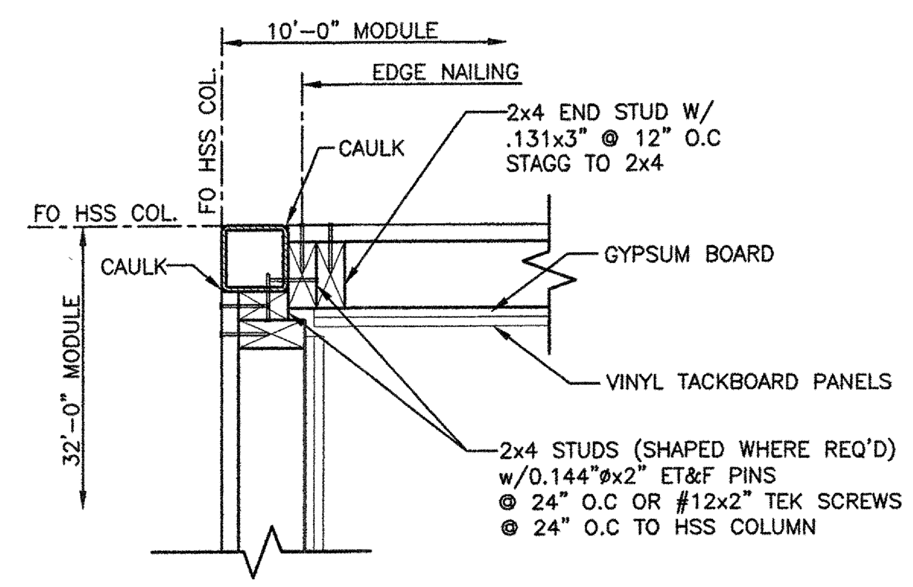

WALL TO COLUMN TYP. DETAIL @ CORNER | 2
FOR COLUMN LOCATION REFER TO ACRH. DETAILS SCALE: 1 1/2"=1'-0"

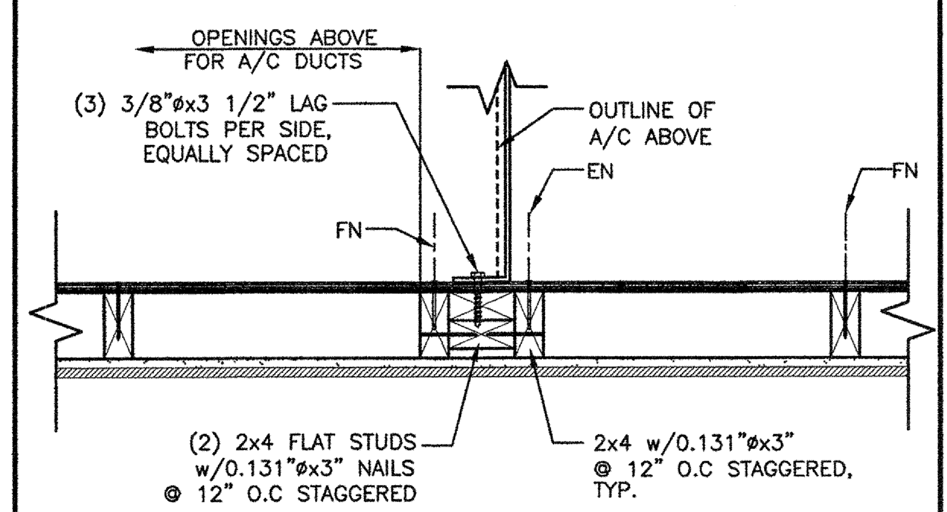

WALL HUNG HVAC DETAIL ATTACHMENT SCALE: 1 1/2"=1'-0" | 3

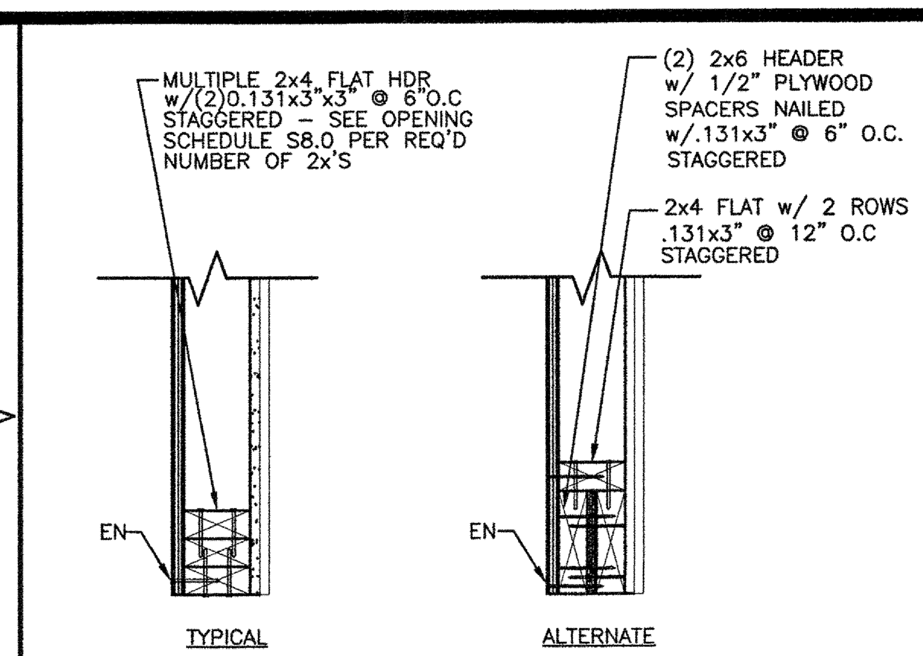

WALL HEADER DETAILS & ALTERNATE SCALE: 1 1/2"=1'-0" | 4

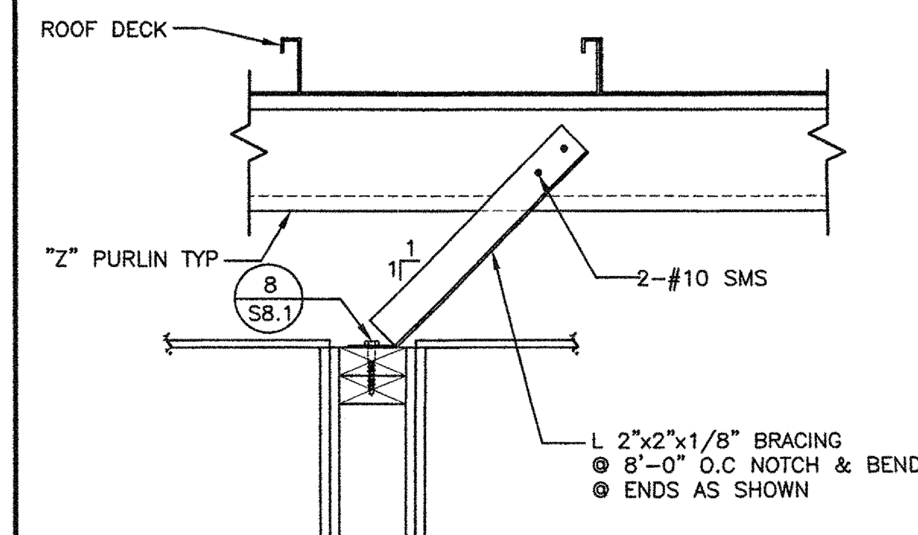

NOTE:
WALL MUST BE BRACED @ 8'-0" MAX BY EITHER AN INTERSECTING WALL OR WITH TOP PLATE BRACING TO ROOF FRAMING.

TYP. INTERIOR WALL BRACING | 5
BRACE PARALLEL TO PURLINS SCALE: 1 1/2"=1'-0"

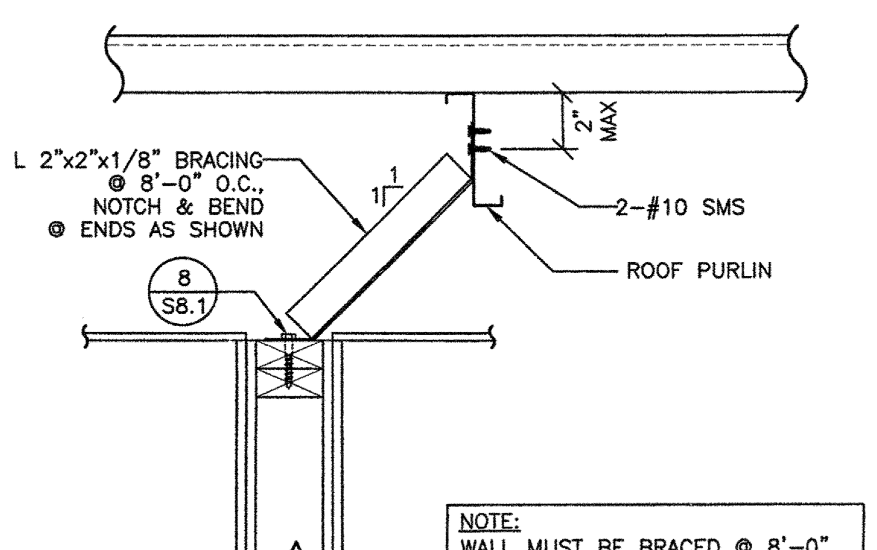

NOTE:
WALL MUST BE BRACED @ 8'-0" MAX BY EITHER AN INTERSECTING WALL OR WITH TOP PLATE BRACING TO ROOF FRAMING.

TYP. INTERIOR WALL BRACING | 6
BRACE PERPENDICULAR TO PURLINS SCALE: 1 1/2"=1'-0"

NOTE:
WALL MUST BE BRACED @ 8'-0" MAX BY EITHER AN INTERSECTING WALL OR WITH WITH TOP PLATE BRACING TO ROOF FRAMING

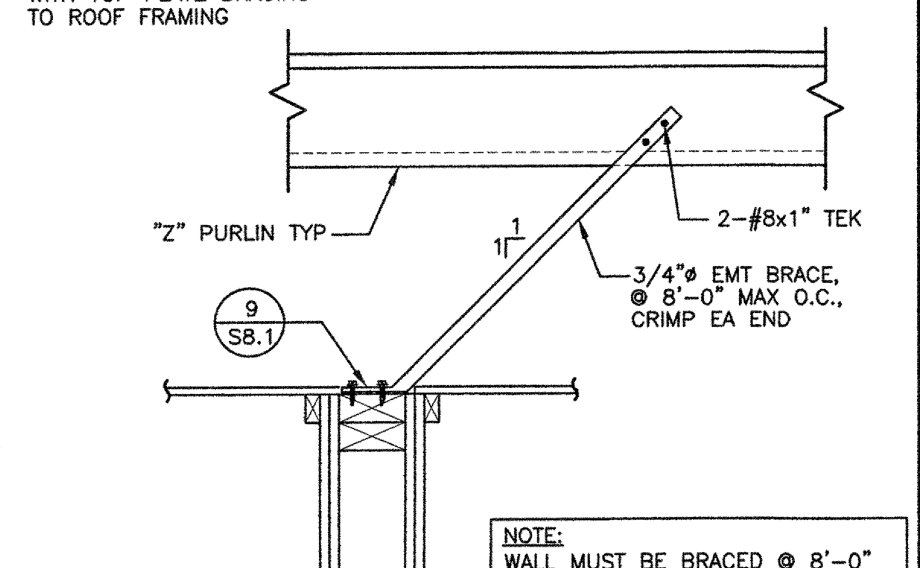

NOTE:
WALL MUST BE BRACED @ 8'-0" MAX BY EITHER AN INTERSECTING WALL OR WITH TOP PLATE BRACING TO ROOF FRAMING.

ALT. INTERIOR WALL BRACING w/EMT BRACE | 7
BRACE PARALLEL TO PURLINS SCALE: 1 1/2"=1'-0"

NOTE:
WALL MUST BE BRACED @ 8'-0" MAX BY EITHER AN INTERSECTING WALL OR WITH WITH TOP PLATE BRACING TO ROOF FRAMING

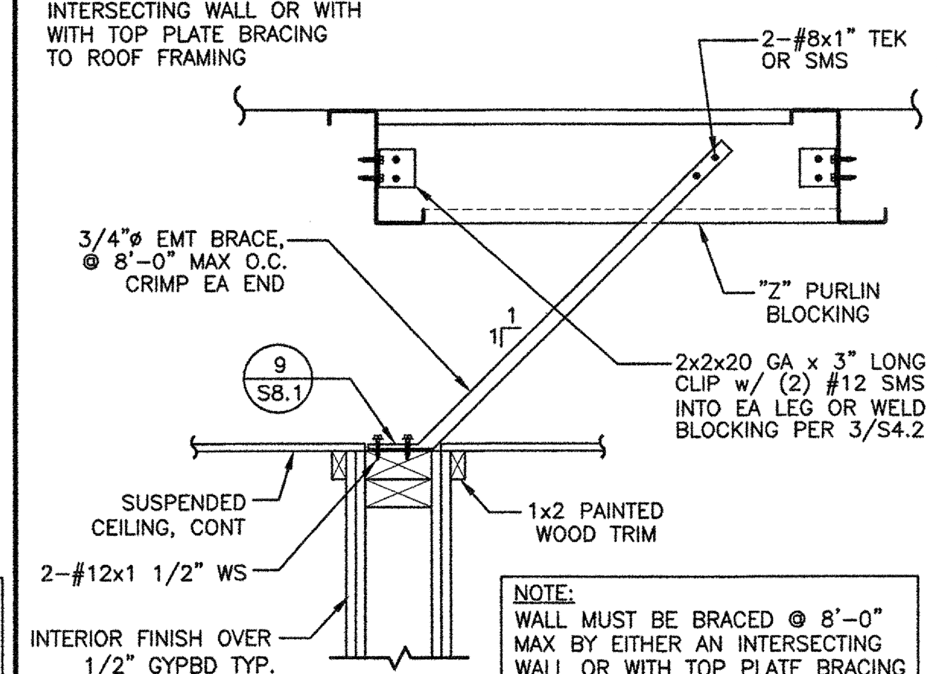

NOTE:
WALL MUST BE BRACED @ 8'-0" MAX BY EITHER AN INTERSECTING WALL OR WITH TOP PLATE BRACING TO ROOF FRAMING.

ALT. INTERIOR WALL BRACING w/EMT BRACE | 7A
BRACE PERPENDICULAR TO PURLINS SCALE: 1 1/2"=1'-0"

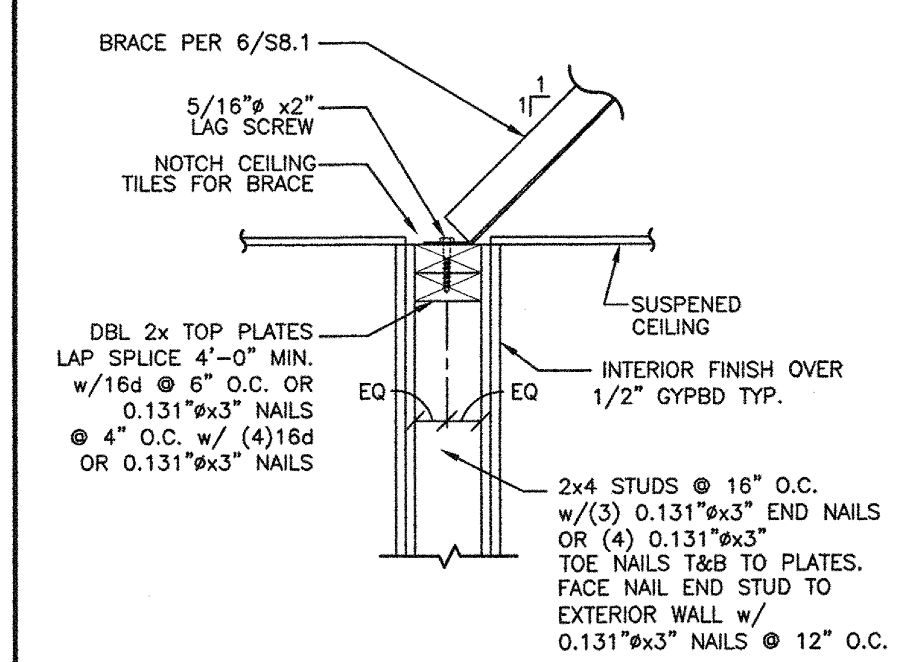

TYP. INTERIOR WALL BRACING | 8
INTERIOR PARTITION BRACING SCALE: 1 1/2"=1'-0"

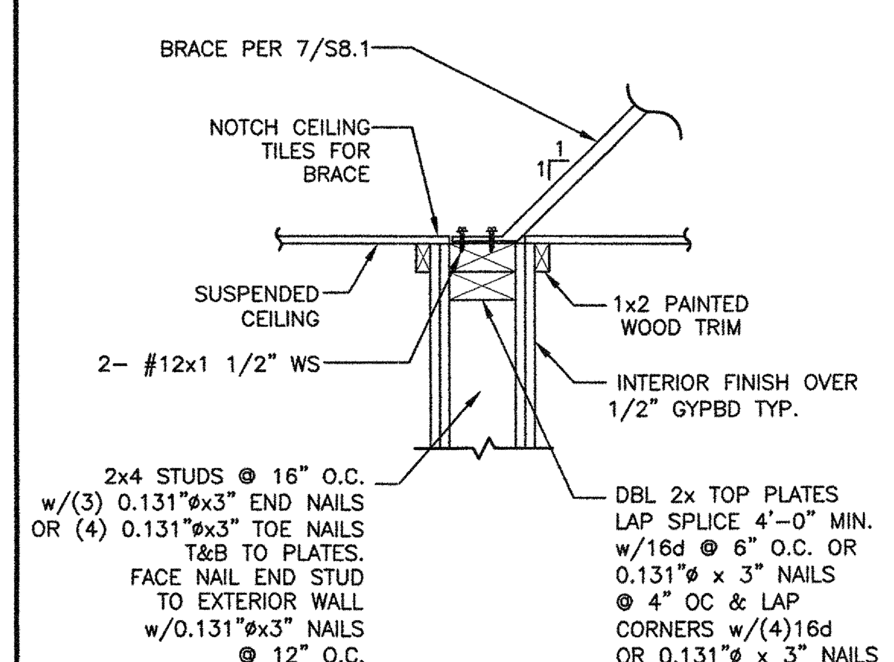

ALT. INTERIOR WALL BRACING | 9
INTERIOR PARTITION BRACING w/ EMT BRACING SCALE: 1 1/2"=1'-0"

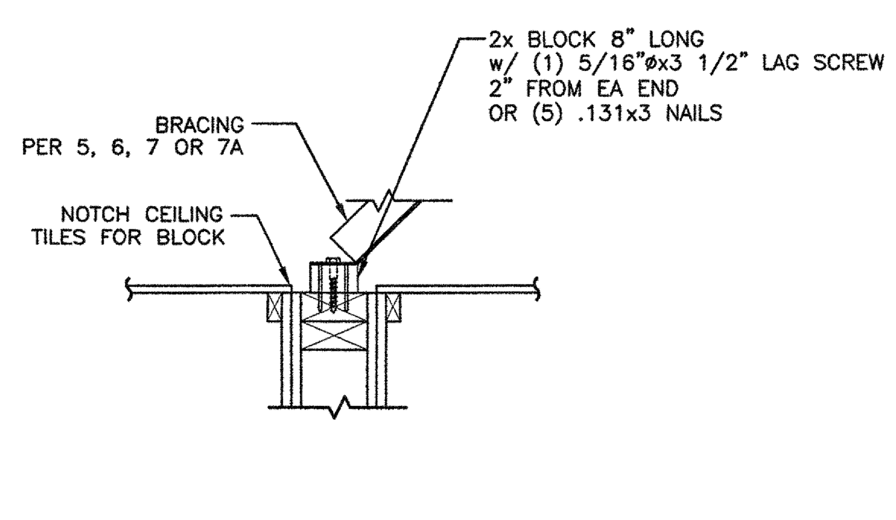

ALT. BLOCKING @ INT. WALL BRACING SCALE: 1 1/2"=1'-0" | 9A

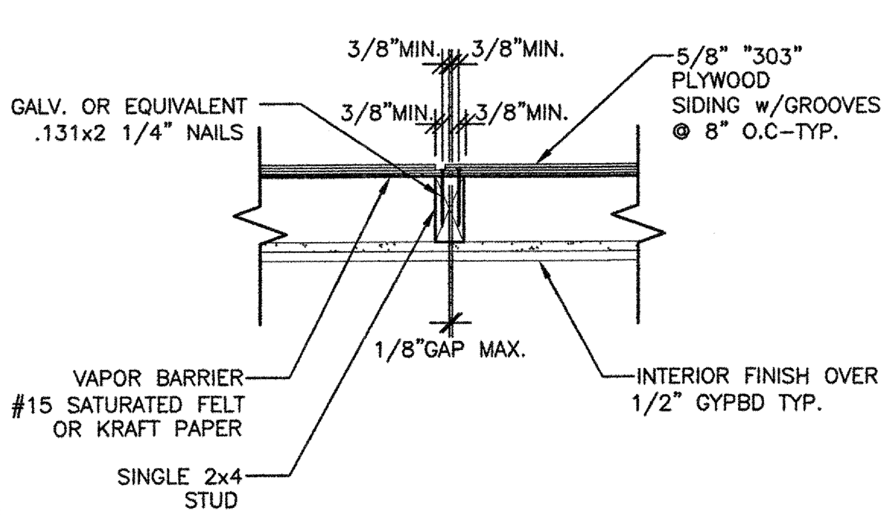

TYP. SIDING JOINT SCALE: 1 1/2"=1'-0" | 10

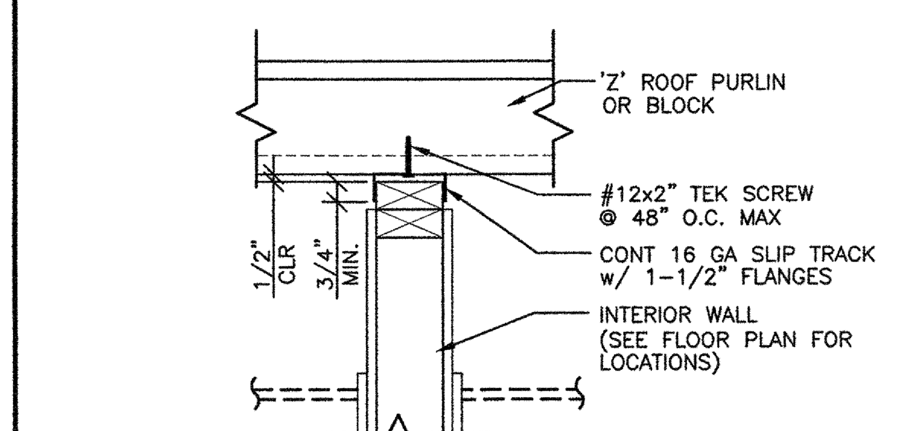

ALT. INTERIOR WALL ATTACHMENT SCALE: 1 1/2"=1'-0" | 11

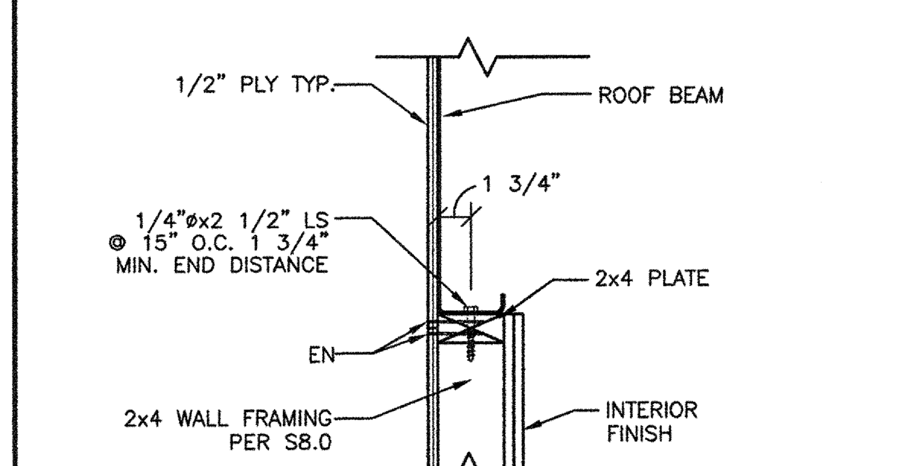

EXTERIOR WALL TO ROOF BEAM DETAIL SCALE: 1 1/2"=1'-0" | 12

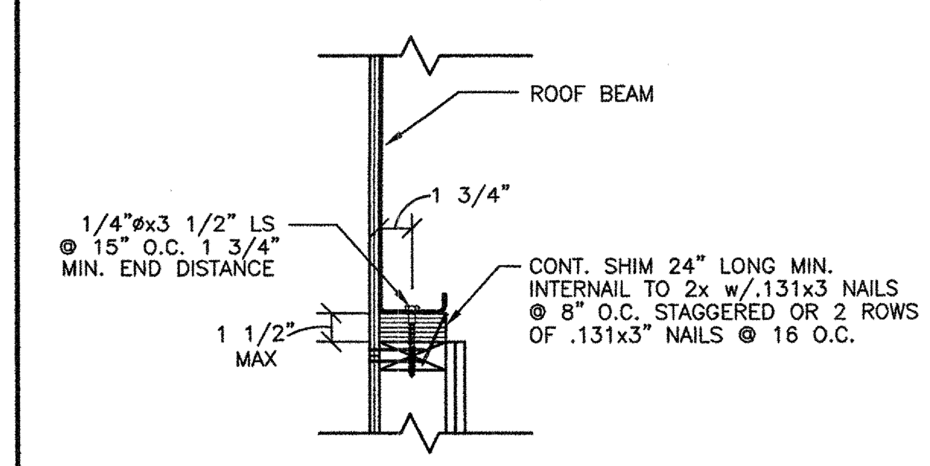

EXTERIOR WALL TO ROOF BEAM DETAIL w/ SHIM CONDITION SCALE: 1 1/2"=1'-0" | 13

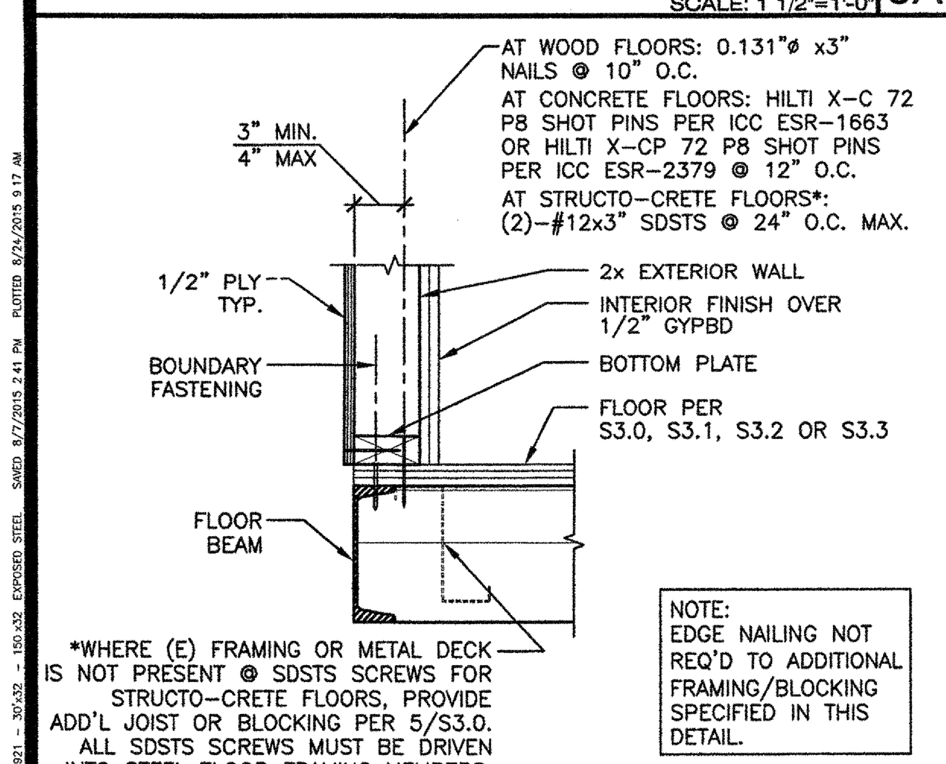

NOTE:
EDGE NAILING NOT REQ'D TO ADDITIONAL FRAMING/BLOCKING SPECIFIED IN THIS DETAIL.

EXTERIOR WALL TO FLOOR TYP. DETAIL SCALE: 1 1/2"=1'-0" | 14

NOTE:
EDGE NAILING NOT REQ'D TO ADDITIONAL FRAMING/BLOCKING SPECIFIED IN THIS DETAIL.

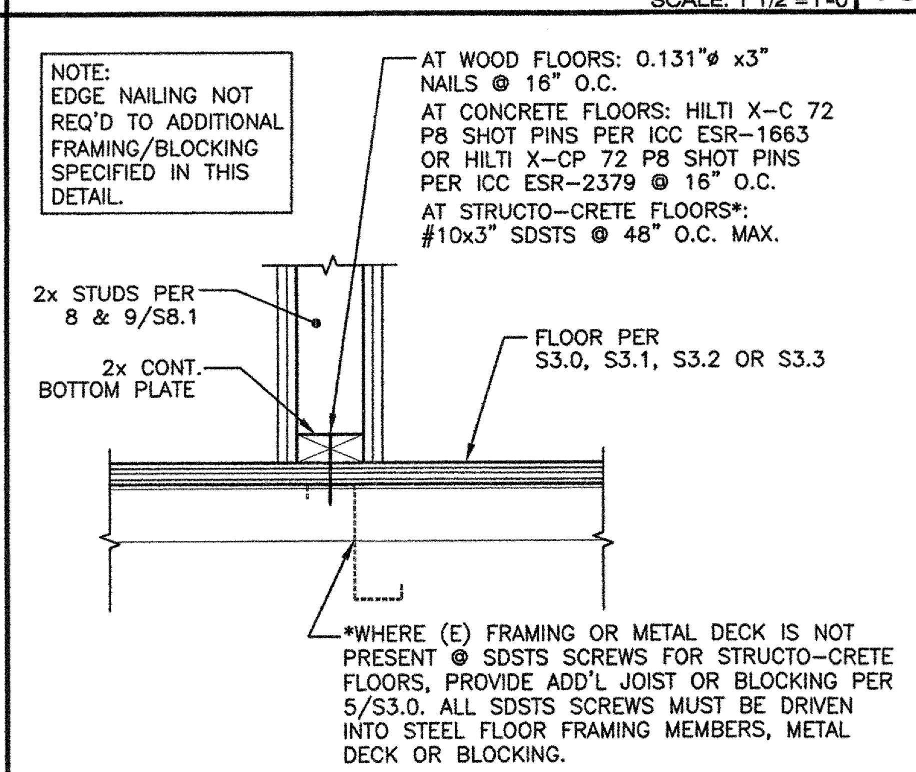

WALL PARALLEL TO FLOOR JOIST

TYP. INTERIOR NON-BEARING WALL BASE ATTACHMENT SCALE: 1 1/2"=1'-0" | 15

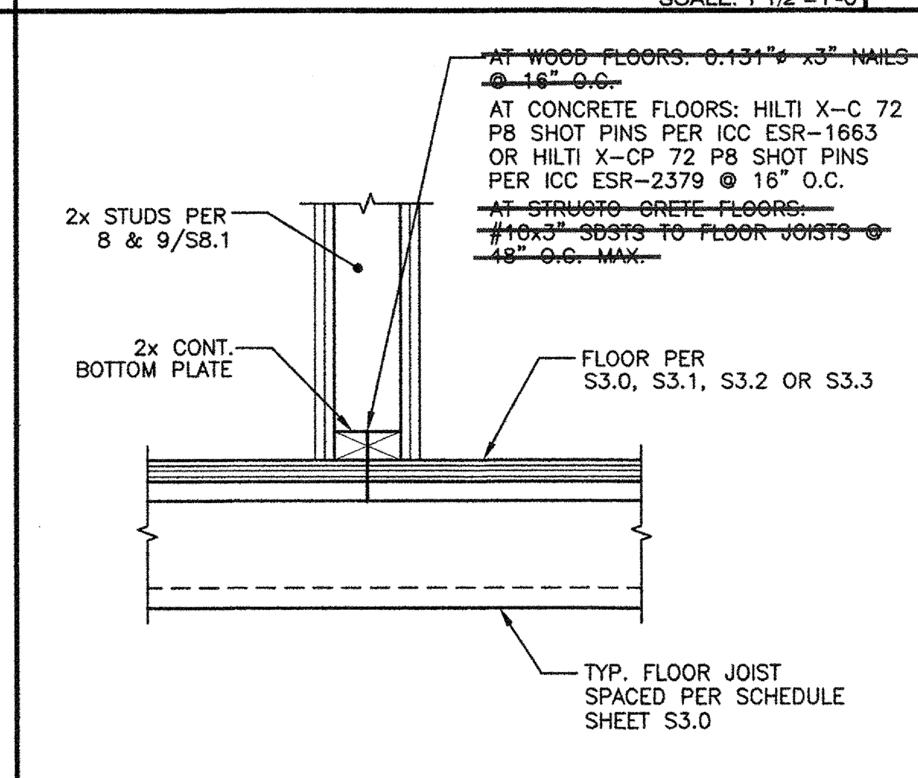

WALL PERPENDICULAR TO FLOOR JOIST

TYP. INTERIOR NON-BEARING WALL BASE ATTACHMENT SCALE: 1 1/2"=1'-0" | 16

NOT USED | 17

NOT USED | 18

American Modular Systems
787 Spreckels Ave.Manteca, CA 95336
Phone (209) 825-1921 - Fax (209) 825-7018
americanmodular.com

MODULAR MANUFACTURER PROPRIETARY STATEMENT
THESE DRAWINGS AND THE MATERIAL CONTAINED THEREIN ARE THE PROPERTY OF AMERICAN MODULAR SYSTEMS, INC. (AMS) AND SHALL NOT BE REPRODUCED, COPIED OR OTHERWISE DISPOSED OF DIRECTLY OR INDIRECTLY AND SHALL NOT BE USED IN WHOLE OR IN PART TO ASSIST IN THE MAKING OF OR FOR THE PURPOSE OF FURNISHING ANY INFORMATION FOR THE MAKING OF DRAWINGS, PRINTS, APPARATUS OR PARTS THEREOF WITHOUT THE FULL KNOWLEDGE AND WRITTEN CONSENT OF AMS. ALL PATENTABLE MATERIAL CONTAINED HEREIN AND ORIGINATING WITH AMS SHALL BE THE SOLE PROPERTY OF AMS.

PRE-CHECKED SET NAME
30' x 32' THRU 150' x 32' BUILDINGS

SITE SPECIFIC PROJECT NAME

SHEET TITLE
WALL FRAMING DETAILS

MANUFACTURER PROFESSIONAL OF RECORD ON PC
LICENSED ARCHITECT RANDALL PATRICK CAVANAGH No. C12631 Ren. 03-31-17 STATE OF CALIFORNIA
REGISTERED PROFESSIONAL ENGINEER MANNY D. FRISCH No. S3380 STRUCTURAL STATE OF CALIFORNIA
09/08/2015

PROJECT SPECIFIC STATE AGENCY APPROVAL
IDENTIFICATION STAMP DIV. OF THE STATE ARCHITECT
02 116495
AC — FLS ✓ SS
DATE 12-18-2017

ORIGINAL PC STATE AGENCY APPROVAL
IDENTIFICATION STAMP DIV. OF THE STATE ARCHITECT CA. DEPT. OF GENERAL SERVICES
PC 02-113921 REV. 1
AC — FLS ✓ SS
DATE 10/5/2015

PRE-CHECK (PC) DOCUMENT - CODE: 2013 CBC
A SEPARATE PROJECT APPLICATION FOR CONSTRUCTION IS REQUIRED

REVISIONS
1
2
3
4

DRAWN BY:
SCALE: AS NOTED
DATE:

SHEET NUMBER
S8.1

02-113921 - 30'x32 - 150 x32 EXPOSED STEEL SAVED 8/7/2015 2:41 PM PLOTTED 8/24/2015 9:17 AM

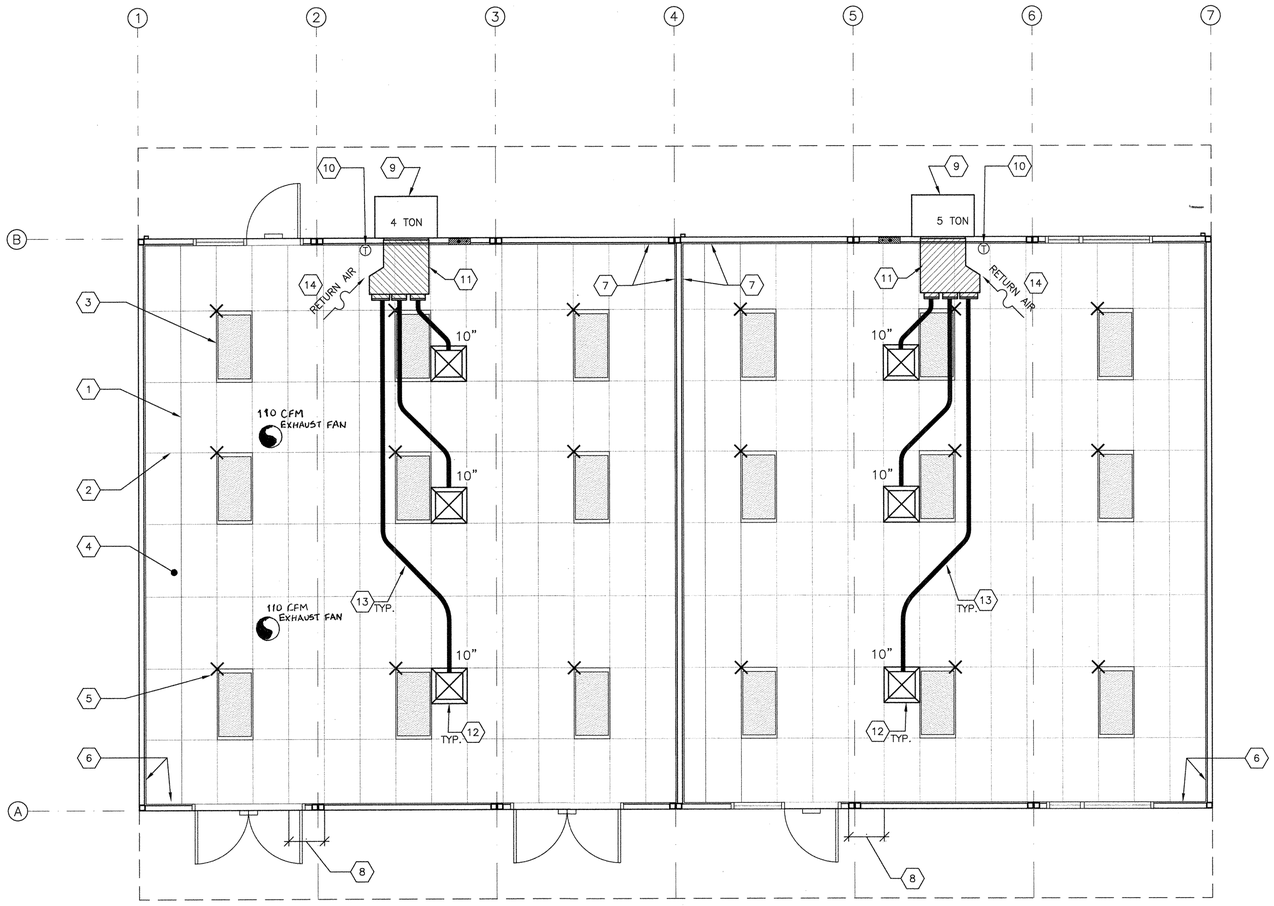

DEMONSTRATION KITCHEN REFLECTED CEILING/MECHANICAL PLAN

SCALE: 1/4" = 1'-0"

1. MAIN RUNNER, TYP.
2. CROSS RUNNER, TYP.
3. INTERIOR LIGHT FIXTURE, REFER TO SHEET SHEET E1.0 FOR SPEC'S
4. CEILING HEIGHT @ 9'-0"
5. SPLAY WIRE, SEE 3/M1.4 FOR DETAILS
6. FIXED CEILING END
7. FREE CEILING END
8. CENTER SECTION THAT CROSSES MODULE LINE TO BE FIELD INSTALLED
9. WALL MOUNTED HVAC
10. THERMOSTAT
11. CONCEALED SUPPLY AIR DUCT ABOVE T-BAR CEILING
12. TYPICAL 4-WAY SUPPLY AIR REGISTER LOCATION AND SIZE MAY VARY PER CEILING LAYOUT AND BUILDING SIZE
13. FLEX DUCT - NOMINAL 10" MIN. (MAY VARY)
14. RETURN AIR AS PART OF UNIT

SHEET NOTES

1. WHERE TWO OR MORE HVAC UNITS SERVE A COMMON SPACE, UNITS SHALL BE EQUIPPED WITH A DUCT SMOKE DETECTOR FOR AUTO SHUTDOWN. INTERCONNECT WITH FIRE ALARM SYSTEM
2. AUTOMATIC SHUT-OFF IS NOT REQUIRED WHEN ALL OCCUPIED ROOMS SERVED BY THE AIR HANDLING EQUIPMENT HAVE DIRECT ACCESS TO THE EXTERIOR AND THE TRAVEL DISTANCE DOES NOT EXCEEDS 100 FT. PER CMC 609 EXEPTION #2
3. ANY MONITORING EQUIPMENT OR ASSOCIATED SENSORS ARE SITE-SPECIFIC AND NOT INCLUDED IN BASE PC.
4. LIGHTING FIXTURE MAY BE INSTALLED ROTATED 90° FROM SHOWN TO MATCH T-GRID.

MEP COMPONENT ANCHORAGE NOTE

ALL MECHANICAL, PLUMBING, AND ELECTRICAL COMPONENTS SHALL BE ANCHORED AND INSTALLED PER THE DETAILS ON THE DSA APPROVED CONSTRUCTION DOCUMENTS. WHERE NO DETAIL IS INDICATED, THE FOLLOWING COMPONENTS SHALL BE ANCHORED OR BRACED TO MEET THE FORCE AND DISPLACEMENT REQUIREMENTS PRESCRIBED IN THE 2013 CBC, SECTIONS 161A.1.18 THROUGH 161A.1.26 AND ASCE 7-10 CHAPTER 13, 26, AND 30.

1. ALL PERMANENT EQUIPMENT AND COMPONENTS.
2. TEMPORARY OR MOVABLE EQUIPMENT THAT IS PERMANENTLY ATTACHED (E.G. HARD WIRED) TO THE BUILDING UTILITY SERVICES SUCH AS ELECTRICITY, GAS OR WATER.
3. MOVABLE EQUIPMENT WHICH IS STATIONED IN ONE PLACE FOR MORE THAN 8 HOURS AND HEAVIER THAN 400 POUNDS ARE REQUIRED TO BE ANCHORED WITH TEMPORARY ATTACHMENTS.

THE FOLLOWING MECHANICAL AND ELECTRICAL COMPONENTS SHALL BE POSITIVELY ATTACHED TO THE STRUCTURE, BUT THE ATTACHMENT NEED NOT BE DETAILED ON THE PLANS. THESE COMPONENTS SHALL HAVE FLEXIBLE CONNECTIONS PROVIDED BETWEEN THE COMPONENT AND ASSOCIATED DUCTWORK, PIPING, AND CONDUIT.

A. COMPONENTS WEIGHING LESS THAN 400 POUNDS AND THAT HAVE A CENTER OF MASS LOCATED 4 FEET OR LESS ABOVE THE ADJACENT FLOOR OR ROOF LEVEL THAT DIRECTLY SUPPORT THE COMPONENT.
B. COMPONENTS WEIGHING LESS THAN 20 POUNDS, OR IN THE CASE OF DISTRIBUTED SYSTEMS, LESS THAN 5 POUNDS PER FOOT, WHICH ARE SUSPENDED FROM A ROOF OR FLOOR OR HUNG FORM A WALL.

FOR THOSE ELEMENTS THAT DO NOT REQUIRE DETAILS ON THE APPROVED DRAWINGS, THE INSTALLATION SHALL BE SUBJECT TO THE APPROVAL OF THE STRUCTURAL ENGINEER OF RECORD AND THE DSA DISTRICT STRUCTURAL ENGINEER. THE PROJECT INSPECTOR WILL VERIFY THAT ALL COMPONENTS AND EQUIPMENT HAVE BEEN ANCHORED IN ACCORDANCE WITH ABOVE REQUIREMENTS.

PIPING, DUCTWORK, AND ELECTRICAL DISTIBUTION SYSTEM BRACING NOTE

PIPING, DUCTWORK, AND ELECTRICAL DISTRIBUTION SYSTEMS SHALL BE BRACED TO COMPLY WITH THE FORCES AND DISPLACEMENTS PRESCRIBED IN ASCE 7-10 SECTION 13.3 AS DEFINED IN ASCE 7-10 SECTION 13.6.8, 13.6.7, 13.6.5.6, AND 2013 CBC, SECTIONS 1616A.1.23, 1616A.1.24, 1616A.1.25 AND 1616A.1.26.

THE BRACING AND ATTACHMENTS TO THE STRUCTURE SHALL BE DETAILED ON THE APPROVED DRAWINGS OR THEY SHALL COMPLY WITH ONE OF THE OSHPD PRE-APPROVALS (OPM#).

COPIES OF THE BRACING SYSTEM INSTALLATION GUIDE OR MANUAL SHALL BE AVAILABLE ON THE JOB SITE PRIOR TO THE START OF HANGING AND BRACING OF THE PIPE, DUCTWORK, AND ELECTRICAL DISTRIBUTION SYSTEMS.

1 GENERAL NOTES

American Modular Systems
787 Spreckels Ave. Manteca, CA 95336
Phone (209) 825-1921 - Fax (209) 825-7018
americanmodular.com

MODULAR MANUFACTURER PROPRIETARY STATEMENT

THESE DRAWINGS AND THE MATERIAL CONTAINED THEREIN ARE THE PROPERTY OF AMERICAN MODULAR SYSTEMS, INC. (AMS) AND SHALL NOT BE REPRODUCED, COPIED OR OTHERWISE DISPOSED OF DIRECTLY OR INDIRECTLY AND SHALL NOT BE USED IN WHOLE OR IN PART TO ASSIST IN THE MAKING OF OR FOR THE PURPOSE OF FURNISHING ANY INFORMATION FOR THE MAKING OF DRAWINGS, PRINTS, APPARATUS OR PARTS THEREOF WITHOUT THE FULL KNOWLEDGE AND WRITTEN CONSENT OF AMS. ALL PATENTABLE MATERIAL CONTAINED HEREIN AND ORIGINATING WITH AMS SHALL BE THE SOLE PROPERTY OF AMS.

PRE-CHECKED SET NAME

30' x 32' THRU 150' x 32' BUILDINGS

SITE SPECIFIC PROJECT NAME

MARIN COMMUNITY CSD - INDIAN VALLEY CAMPUS 60x32 BUILDING

SHEET TITLE

REFLECTIVE CEILING/ MCHANICALPLAN

MANUFACTURER PROFESSIONAL OF RECORD ON PC

LICENSED ARCHITECT — TIMOTHY PATRICK CONNAUGHTON — No. C12631 — Ren. 3-31-19 — STATE OF CALIFORNIA

REGISTERED PROFESSIONAL ENGINEER — MANNY D. FRISCH — No. 53380 — Exp: 03/31/16 — STATE OF CALIFORNIA

PROJECT SPECIFIC STATE AGENCY APPROVAL

IDENTIFICATION STAMP — DIV. OF THE STATE ARCHITECT — 02 116495 — DATE 12-18-2017

ORIGINAL PC STATE AGENCY APPROVAL

BASED ON PC# 02-113921

PRE-CHECK (PC) DOCUMENT ~ CODE: 2013 CBC
A SEPARATE PROJECT APPLICATION FOR CONSTRUCTION IS REQUIRED

REVISIONS

DRAWN BY:	BA
SCALE:	AS NOTED
DATE:	11/10/17

SHEET NUMBER

M1.0

02-113921 - 32' x 60' - 120' x 60' EXPOSED ROOF.dwg 12/5/2017 9:00 AM ANDRE 12/5/2017 11:00 AM

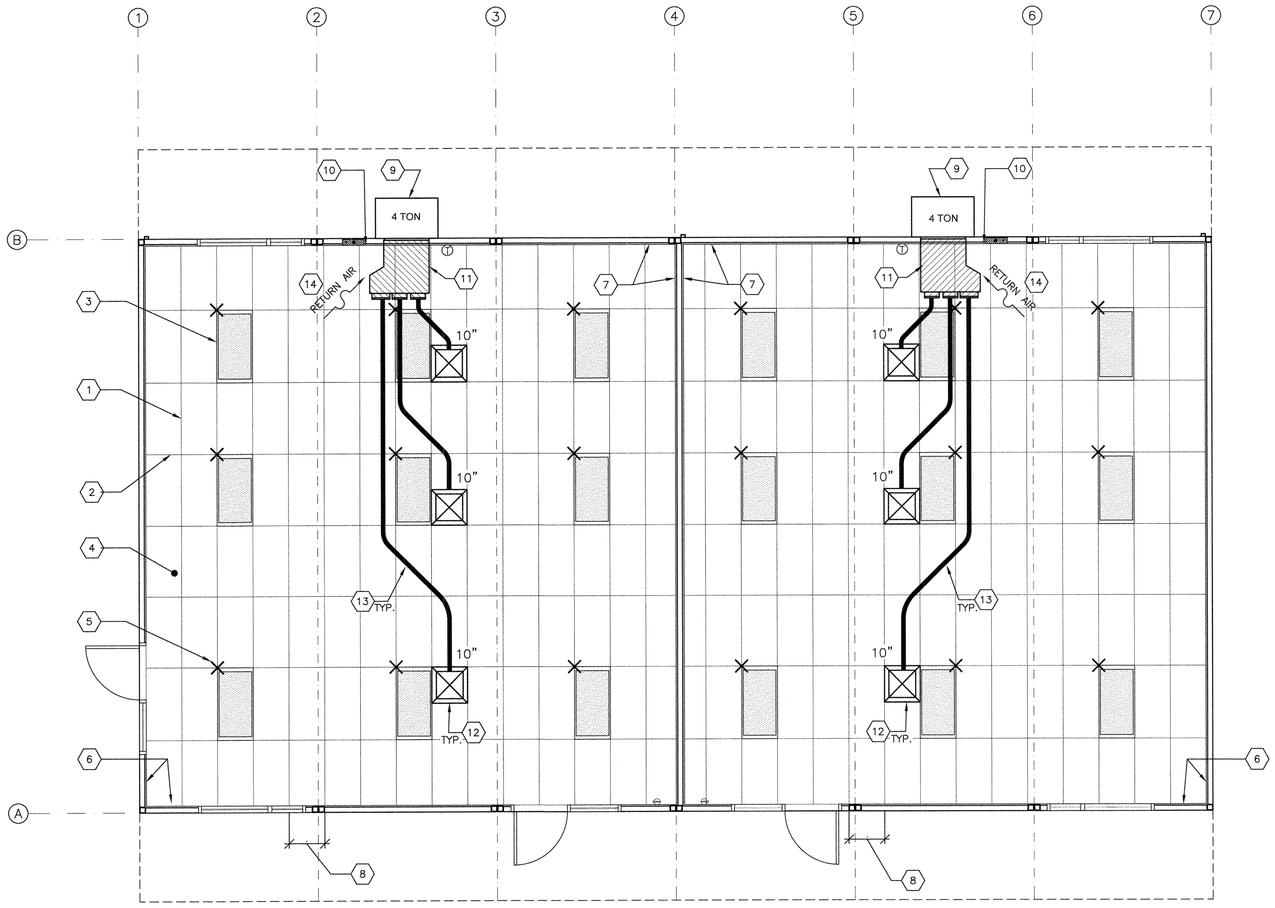

1. MAIN RUNNER, TYP.
2. CROSS RUNNER, TYP.
3. INTERIOR LIGHT FIXTURE, REFER TO SHEET SHEET E1.0 FOR SPEC'S
4. CEILING HEIGHT @ 9'-0"
5. SPLAY WIRE, SEE 3/M1.4 FOR DETAILS
6. FIXED CEILING END
7. FREE CEILING END
8. CENTER SECTION THAT CROSSES MODULE LINE TO BE FIELD INSTALLED
9. WALL MOUNTED HVAC
10. THERMOSTAT
11. CONCEALED SUPPLY AIR DUCT ABOVE T-BAR CEILING
12. TYPICAL 4-WAY SUPPLY AIR REGISTER LOCATION AND SIZE MAY VARY PER CEILING LAYOUT AND BUILDING SIZE
13. FLEX DUCT – NOMINAL 10" MIN. (MAY VARY)
14. RETURN AIR AS PART OF UNIT

SHEET NOTES

1. WHERE TWO OR MORE HVAC UNITS SERVE A COMMON SPACE, UNITS SHALL BE EQUIPPED WITH A DUCT SMOKE DETECTOR FOR AUTO SHUTDOWN. INTERCONNECT WITH FIRE ALARM SYSTEM
2. AUTOMATIC SHUT-OFF IS NOT REQUIRED WHEN ALL OCCUPIED ROOMS SERVED BY THE AIR HANDLING EQUIPMENT HAVE DIRECT ACCESS TO THE EXTERIOR AND THE TRAVEL DISTANCE DOES NOT EXCEEDS 100 FT. PER CMC 609 EXEPTION #2
3. ANY MONITORING EQUIPMENT OR ASSOCIATED SENSORS ARE SITE-SPECIFIC AND NOT INCLUDED IN BASE PC.
4. LIGHTING FIXTURE MAY BE INSTALLED ROTATED 90° FROM SHOWN TO MATCH T-GRID.

MEP COMPONENT ANCHORAGE NOTE

ALL MECHANICAL, PLUMBING, AND ELECTRICAL COMPONENTS SHALL BE ANCHORED AND INSTALLED PER THE DETAILS ON THE DSA APPROVED CONSTRUCTION DOCUMENTS. WHERE NO DETAIL IS INDICATED, THE FOLLOWING COMPONENTS SHALL BE ANCHORED OR BRACED TO MEET THE FORCE AND DISPLACEMENT REQUIREMENTS PRESCRIBED IN THE 2013 CBC, SECTIONS 161A.1.18 THROUGH 161A.1.26 AND ASCE 7-10 CHAPTER 13, 26, AND 30.

1. ALL PERMANENT EQUIPMENT AND COMPONENTS.
2. TEMPORARY OR MOVABLE EQUIPMENT THAT IS PERMANENTLY ATTACHED (E.G. HARD WIRED) TO THE BUILDING UTILITY SERVICES SUCH AS ELECTRICITY, GAS OR WATER.
3. MOVABLE EQUIPMENT WHICH IS STATIONED IN ONE PLACE FOR MORE THAN 8 HOURS AND HEAVIER THAN 400 POUNDS ARE REQUIRED TO BE ANCHORED WITH TEMPORARY ATTACHMENTS.

THE FOLLOWING MECHANICAL AND ELECTRICAL COMPONENTS SHALL BE POSITIVELY ATTACHED TO THE STRUCTURE, BUT THE ATTACHMENT NEED NOT BE DETAILED ON THE PLANS. THESE COMPONENTS SHALL HAVE FLEXIBLE CONNECTIONS PROVIDED BETWEEN THE COMPONENT AND ASSOCIATED DUCTWORK, PIPING, AND CONDUIT.

A. COMPONENTS WEIGHING LESS THAN 400 POUNDS AND THAT HAVE A CENTER OF MASS LOCATED 4 FEET OR LESS ABOVE THE ADJACENT FLOOR OR ROOF LEVEL THAT DIRECTLY SUPPORT THE COMPONENT.
B. COMPONENTS WEIGHING LESS THAN 20 POUNDS, OR IN THE CASE OF DISTRIBUTED SYSTEMS, LESS THAN 5 POUNDS PER FOOT, WHICH ARE SUSPENDED FROM A ROOF OR FLOOR OR HUNG FORM A WALL.

FOR THOSE ELEMENTS THAT DO NOT REQUIRE DETAILS ON THE APPROVED DRAWINGS, THE INSTALLATION SHALL BE SUBJECT TO THE APPROVAL OF THE STRUCTURAL ENGINEER OF RECORD AND THE DSA DISTRICT STRUCTURAL ENGINEER. THE PROJECT INSPECTOR WILL VERIFY THAT ALL COMPONENTS AND EQUIPMENT HAVE BEEN ANCHORED IN ACCORDANCE WITH ABOVE REQUIREMENTS.

PIPING, DUCTWORK, AND ELECTRICAL DISTIBUTION SYSTEM BRACING NOTE

PIPING, DUCTWORK, AND ELECTRICAL DISTRIBUTION SYSTEMS SHALL BE BRACED TO COMPLY WITH THE FORCES AND DISPLACEMENTS PRESCRIBED IN ASCE 7-10 SECTION 13.3 AS DEFINED IN ASCE 7-10 SECTION 13.6.8, 13.6.7, 13.6.5.6, AND 2013 CBC, SECTIONS 1616A.1.23, 1616A.1.24, 1616A.1.25 AND 1616A.1.26.

THE BRACING AND ATTACHMENTS TO THE STRUCTURE SHALL BE DETAILED ON THE APPROVED DRAWINGS OR THEY SHALL COMPLY WITH ONE OF THE OSHPD PRE-APPROVALS (OPM#).

COPIES OF THE BRACING SYSTEM INSTALLATION GUIDE OR MANUAL SHALL BE AVAILABLE ON THE JOB SITE PRIOR TO THE START OF HANGING AND BRACING OF THE PIPE, DUCTWORK, AND ELECTRICAL DISTRIBUTION SYSTEMS.

American Modular Systems
787 Spreckels Ave. Manteca, CA 95336
Phone (209) 825-1921 - Fax (209) 825-7018
americanmodular.com

MODULAR MANUFACTURER PROPRIETARY STATEMENT

THESE DRAWINGS AND THE MATERIAL CONTAINED THEREIN ARE THE PROPERTY OF AMERICAN MODULAR SYSTEMS, INC. (AMS) AND SHALL NOT BE REPRODUCED, COPIED OR OTHERWISE DISPOSED OF DIRECTLY OR INDIRECTLY AND SHALL NOT BE USED IN WHOLE OR IN PART TO ASSIST IN THE MAKING OF OR FOR THE PURPOSE OF FURNISHING ANY INFORMATION FOR THE MAKING OF DRAWINGS, PRINTS, APPARATUS OR PARTS THEREOF WITHOUT THE FULL KNOWLEDGE AND WRITTEN CONSENT OF AMS. ALL PATENTABLE MATERIAL CONTAINED HEREIN AND ORIGINATING WITH AMS SHALL BE THE SOLE PROPERTY OF AMS.

PRE-CHECKED SET NAME

30' x 32' THRU 150' x 32' BUILDINGS

SITE SPECIFIC PROJECT NAME

MARIN COMMUNITY CSD - INDIAN VALLEY CAMPUS 60x32 BUILDING

SHEET TITLE

REFLECTIVE CEILING/ MCHANICALPLAN

MANUFACTURER PROFESSIONAL OF RECORD ON PC

LICENSED ARCHITECT — TIMOTHY PATRICK CONNOR — No. C12631 Ren 3-31-19 — STATE OF CALIFORNIA

REGISTERED PROFESSIONAL ENGINEER — MANNY D. FRIGOS — No. S3380 Exp:03/31/16 — STATE OF CALIFORNIA

PROJECT SPECIFIC STATE AGENCY APPROVAL

IDENTIFICATION STAMP DIV. OF THE STATE ARCHITECT
02 116495
SC TM FF
DATE 12-18-2017

ORIGINAL PC STATE AGENCY APPROVAL

BASED ON PC# 02-113921

PRE-CHECK (PC) DOCUMENT – CODE: 2013 CBC
A SEPARATE PROJECT APPLICATION FOR CONSTRUCTION IS REQUIRED

REVISIONS

DRAWN BY:	BA
SCALE:	AS NOTED
DATE:	11/10/17

SHEET NUMBER

M1.0A

CLASSROOM REFLECTED CEILING/MECHANICAL PLAN

SCALE: 1/4" = 1' - 0"

1

GENERAL NOTES

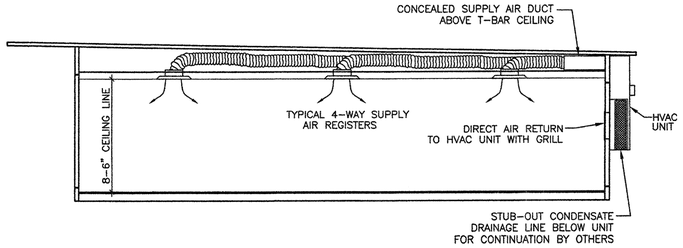

TYPICAL MECHANICAL DETAIL SECTION — 1

SCALE: 3/16" = 1'-0"

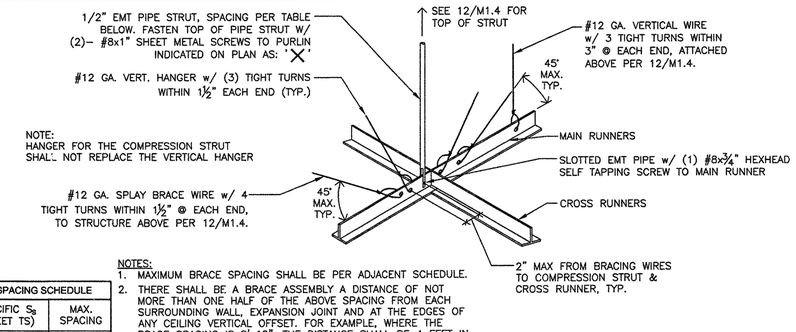

BRACE SPACING SCHEDULE	
SITE SPECIFIC S_s (PER SHEET TS)	MAX. SPACING
☐ $S_s \geq 2.60$	8'x8'
☐ $S_s < 2.60$	8'x12'

NOTES:
1. MAXIMUM BRACE SPACING SHALL BE PER ADJACENT SCHEDULE.
2. THERE SHALL BE A BRACE ASSEMBLY A DISTANCE OF NOT MORE THAN ONE HALF OF THE ABOVE SPACING FROM EACH SURROUNDING WALL, EXPANSION JOINT AND AT THE EDGES OF ANY CEILING VERTICAL OFFSET. FOR EXAMPLE, WHERE THE BRACE SPACING IS 8'x12", THE DISTANCE SHALL BE 4 FEET IN THE DIRECTION OF THE 8 FOOT SPACING AND 6 FEET IN THE DIRECTION OF THE 12 FOOT SPACING. FOR FURTHER INFORMATION REFER TO SPECIFICATIONS ON SHEET M1.7.

STRUT/SPLAY WIRE ASSEMBLY DETAIL — 3

SCALE: N.T.S

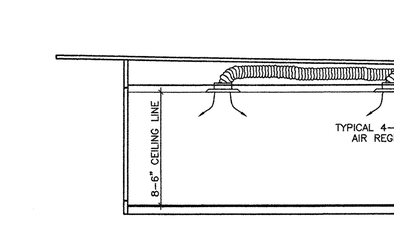

NOT USED

FLOOR MOUNTED WATER HEATER SUPPORT DETAIL — 6

SCALE: N.T.S

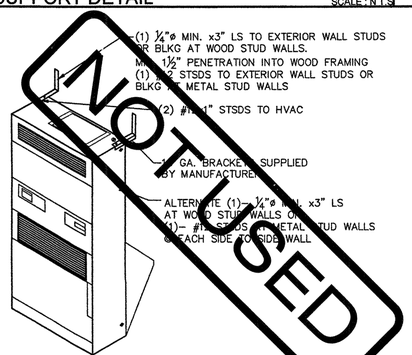

NOT USED

INTERIOR HVAC ANCHORAGE — 9

SCALE: N.T.S

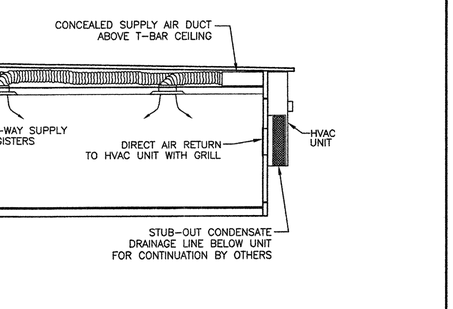

PROVIDE (1) #8x¾" SMS THRU GRID TO LIGHT FIXTURE @ 2 MIN. CORNERS

LIGHT FIXTURE ATTACHMENT DETAIL — 7

SCALE: N.T.S

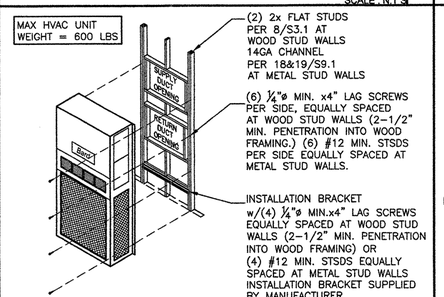

WALL MOUNT HVAC ANCHORAGE — 10

SCALE: N.T.S

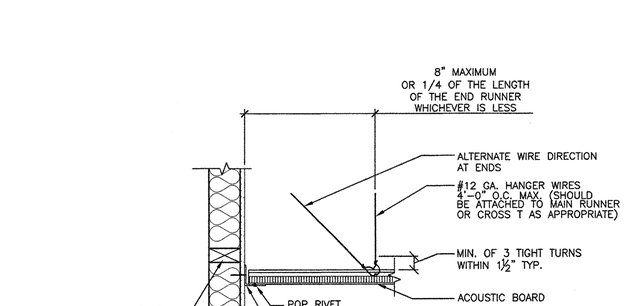

C.B.C. SECTION 718.4.3:
"DRAFTSTOPPING SHALL BE INSTALLED IN ATTICS AND CONCEALED ROOF SPACES, SUCH THAT ANY HORIZONTAL AREA DOES NOT EXCEED 3,000 SQUARE FEET."
NOTE EXCEPTION #2:
IN GROUP A, E, H, I, L OCCUPANCIES, WHERE AN AUTOMATIC SPRINKLER SYSTEM IN ACCORDANCE WITH SECTION 903.3.1.1 IS INSTALLED, THE AREA BETWEEN DRAFT STOPS MAY BE 9,000 SQUARE FEET AND THE GREATEST HORIZONTAL DISTANCE MAY BE 100 FEET.

DRAFT STOP DETAIL — 8

SCALE: 1 1/2" = 1'-0"

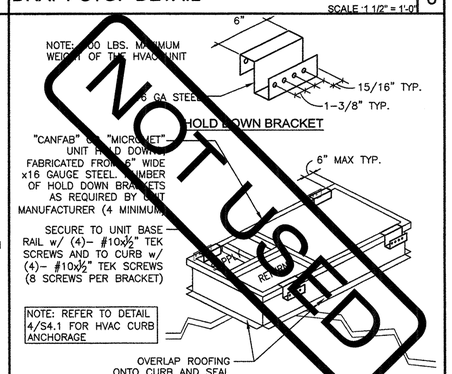

NOT USED

ROOF CURB ELEVATION-OPTIONAL — 11

SCALE: N.T.S

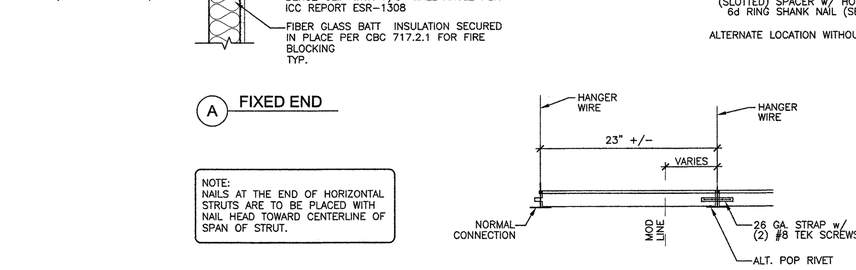

A FIXED END

NOTE:
NAILS AT THE END OF HORIZONTAL STRUTS ARE TO BE PLACED WITH NAIL HEAD TOWARD CENTERLINE OF SPAN OF STRUT.

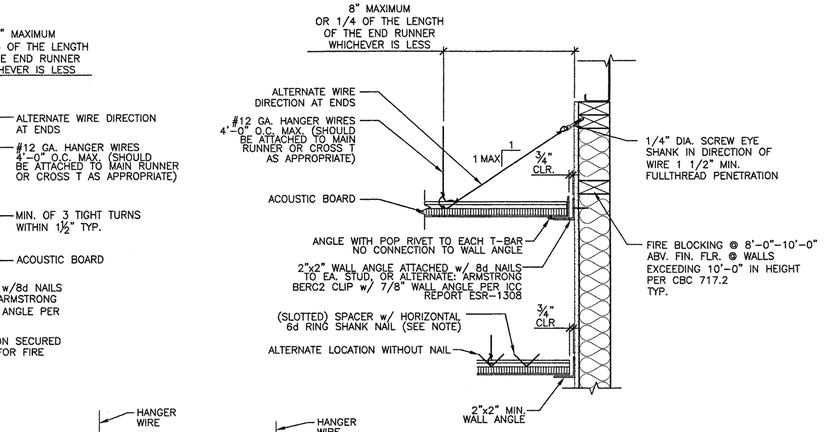

B FREE END

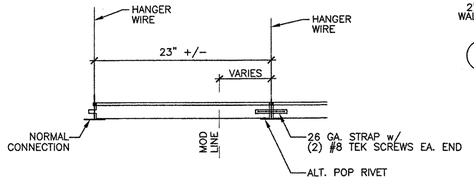

C RUNNER SPLICE AND CEILING CONNECTION @ MODULE LINE

CONNECTION TO PURLINS DETAIL — 12

SCALE: 1 1/2" = 1'-0"

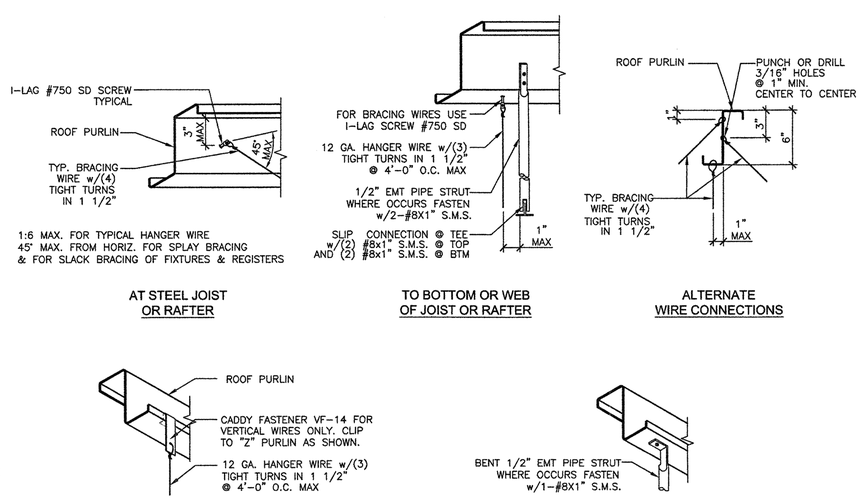

American Modular Systems
787 Spreckels Ave Manteca, CA 95336
Phone (209) 825-1921 - Fax (209) 825-7018
americanmodular.com

MODULAR MANUFACTURER PROPRIETARY STATEMENT
THESE DRAWINGS AND THE MATERIAL CONTAINED THEREIN ARE THE PROPERTY OF AMERICAN MODULAR SYSTEMS, INC. (AMS) AND SHALL NOT BE REPRODUCED, COPIED OR OTHERWISE DISPOSED OF DIRECTLY OR INDIRECTLY AND SHALL NOT BE USED IN WHOLE OR IN PART TO ASSIST IN THE MAKING OF OR FOR THE PURPOSE OF FURNISHING ANY INFORMATION FOR THE MAKING OF DRAWINGS, PRINTS, APPARATUS OR PARTS THEREOF WITHOUT THE FULL KNOWLEDGE AND WRITTEN CONSENT OF AMS. ALL PATENTABLE MATERIAL CONTAINED HEREIN AND ORIGINATING WITH AMS SHALL BE THE SOLE PROPERTY OF AMS.

PRE-CHECKED SET NAME

30' x 32' THRU 150' x 32' BUILDINGS

SITE SPECIFIC PROJECT NAME

SHEET TITLE

MECHANICAL BUILDING SECTIONS & CEILING DETAILS

MANUFACTURER PROFESSIONAL OF RECORD ON PC

LICENSED ARCHITECT MARSHALL PATRICK HOLLINGSWORTH No. C12631 Ren. 08-31-17 STATE OF CALIFORNIA

PROJECT SPECIFIC STATE AGENCY APPROVAL

IDENTIFICATION STAMP DIV. OF THE STATE ARCHITECT
02 11 6495
AC TM FLS KS JCM
DATE 12-18-2017

ORIGINAL PC STATE AGENCY APPROVAL

IDENTIFICATION STAMP DIV. OF THE STATE ARCHITECT CA. DEPT. OF GENERAL SERVICES
PC 02-113921 REV. 1
AC FLS SS
DATE 10/5/2015

PRE-CHECK (PC) DOCUMENT - CODE: 2013 CBC
A SEPARATE PROJECT APPLICATION FOR CONSTRUCTION IS REQUIRED

REVISIONS
1
2
3
4

DRAWN BY:
SCALE: AS NOTED
DATE:

SHEET NUMBER

M1.4

02-113921 - 30-32 - 150-32 EXPOSED STEEL DWG 8/13/2015 1:37 PM PLOTTED 8/24/2015 9:16 AM

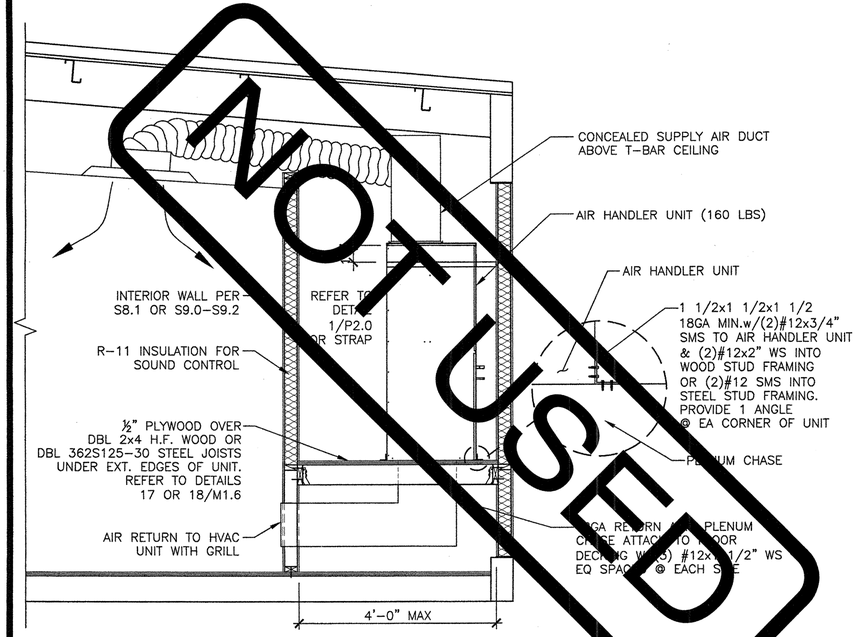

NOT USED

SPLIT SYSTEM CROSS SECTION
SCALE: N.T.S. | 1

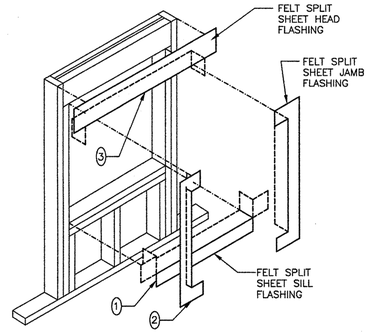

WINDOW CONDITION

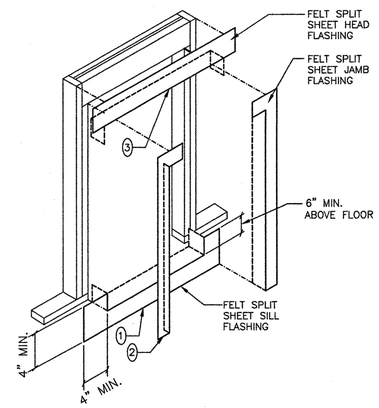

DOOR CONDITION

(#) = SEQUENCE OF ORDER

GAS CONNECTION DETAIL
SCALE: N.T.S. | 2

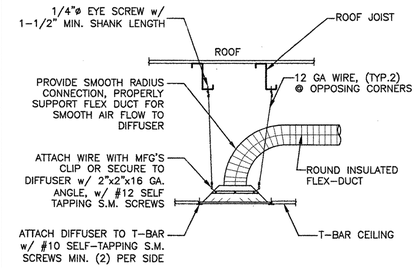

SUPPLY - RETURN DIFFUSER MOUNTING DETAIL
SCALE: N.T.S. | 7

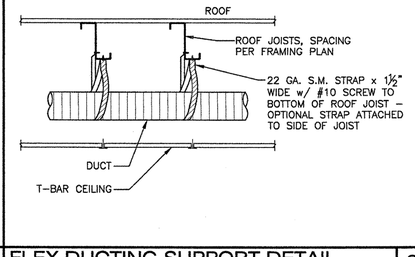

FLEX DUCTING SUPPORT DETAIL
SCALE: N.T.S. | 8

American Modular Systems
787 Spreckels Ave.Manteca, CA 95336
Phone (209) 825-1921 - Fax (209) 825-7018
americanmodular.com

MODULAR MANUFACTURER PROPRIETARY STATEMENT

THESE DRAWINGS AND THE MATERIAL CONTAINED THEREIN ARE THE PROPERTY OF AMERICAN MODULAR SYSTEMS, INC. (AMS) AND SHALL NOT BE REPRODUCED, COPIED OR OTHERWISE DISPOSED OF DIRECTLY OR INDIRECTLY AND SHALL NOT BE USED IN WHOLE OR IN PART TO ASSIST IN THE MAKING OF OR FOR THE PURPOSE OF FURNISHING ANY INFORMATION FOR THE MAKING OF DRAWINGS, PRINTS, APPARATUS OR PARTS THEREOF WITHOUT THE FULL KNOWLEDGE AND WRITTEN CONSENT OF AMS. ALL PATENTABLE MATERIAL CONTAINED HEREIN AND ORIGINATING WITH AMS SHALL BE THE SOLE PROPERTY OF AMS.

PRE-CHECKED SET NAME

30' x 32' THRU 150' x 32' BUILDINGS

SITE SPECIFIC PROJECT NAME

SHEET TITLE

CEILING & MECHANICAL DETAILS

MANUFACTURER PROFESSIONAL OF RECORD ON PC

LICENSED ARCHITECT TIMOTHY PATRICK CONNAUGH No. C12631 Ren. 03-31-17 STATE OF CALIFORNIA

PROJECT SPECIFIC STATE AGENCY APPROVAL

IDENTIFICATION STAMP DIV. OF THE STATE ARCHITECT
02 116495
AC TM FL DATE 12-18-2017

ORIGINAL PC STATE AGENCY APPROVAL

IDENTIFICATION STAMP DIV. OF THE STATE ARCHITECT CA. DEPT. OF GENERAL SERVICES
PC 02-113921
AC FL DATE 6/19/2015

PRE-CHECK (PC) DOCUMENT - CODE: 2013 CBC
A SEPARATE PROJECT APPLICATION FOR CONSTRUCTION IS REQUIRED

REVISIONS
1
2
3
4

DRAWN BY:
SCALE: AS NOTED
DATE:

SHEET NUMBER

M1.5

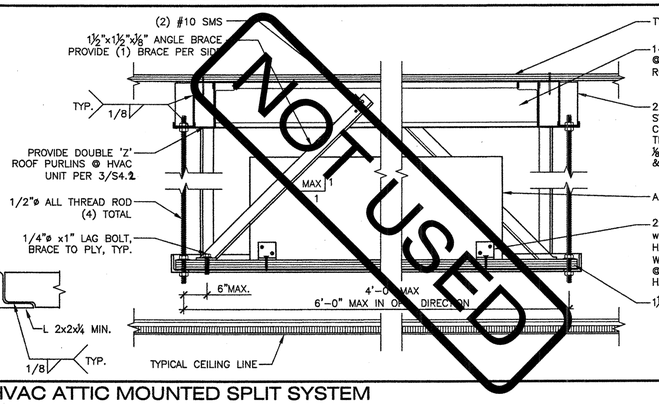

NOTE:
MAX PLY PANEL SPAN=48"
MIN. PLY PANEL WIDTH=24"

NOT USED

HVAC ATTIC MOUNTED SPLIT SYSTEM
SCALE: N.T.S. | 3

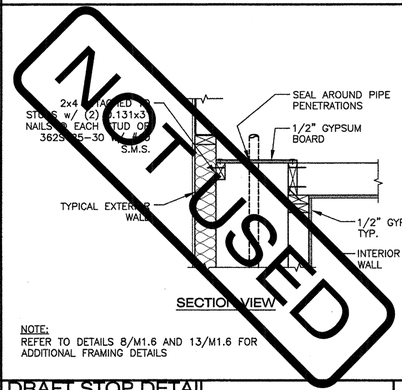

SECTION VIEW

NOTE:
REFER TO DETAILS 8/M1.6 AND 13/M1.6 FOR ADDITIONAL FRAMING DETAILS

NOT USED

DRAFT STOP DETAIL @ PLUMBING CHASE
SCALE: N.T.S. | 4

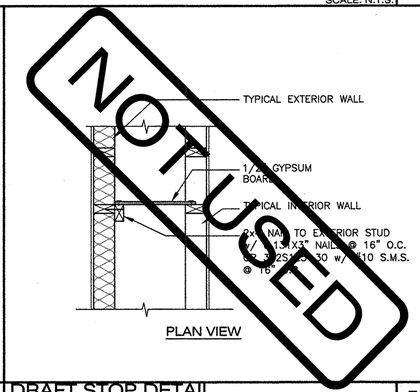

PLAN VIEW

NOT USED

DRAFT STOP DETAIL @ PLUMBING CHASE
SCALE: N.T.S. | 5

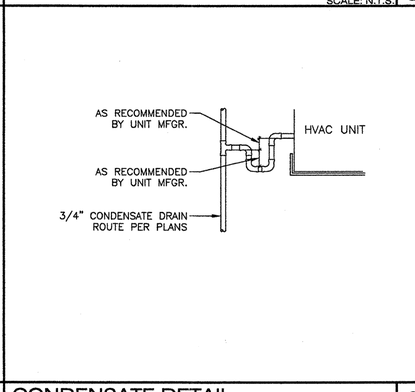

CONDENSATE DETAIL
SCALE: N.T.S. | 9

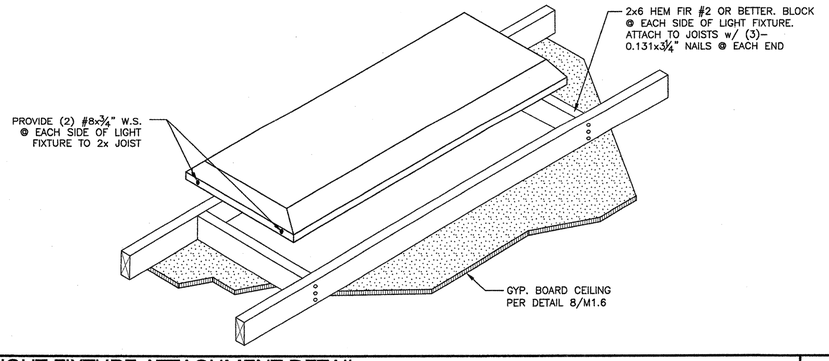

LIGHT FIXTURE ATTACHMENT DETAIL
GYPSUM BOARD CEILING OPTION
SCALE: N.T.S. | 6

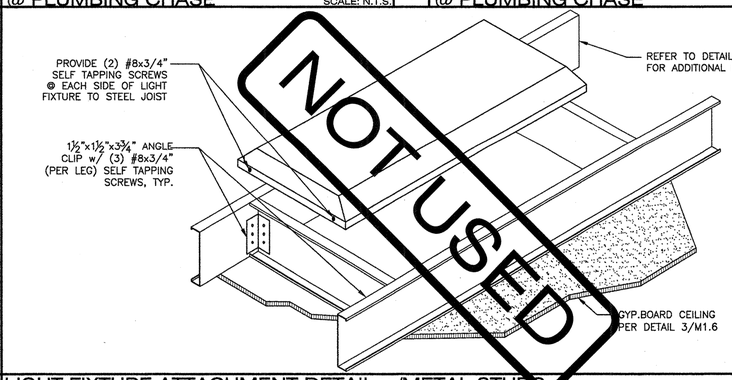

NOT USED

LIGHT FIXTURE ATTACHMENT DETAIL w/METAL STUDS
GYPSUM BOARD CEILING OPTION
SCALE: N.T.S. | 6A

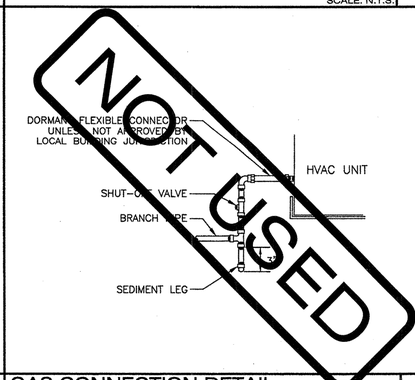

NOT USED

GAS CONNECTION DETAIL
SCALE: N.T.S. | 10

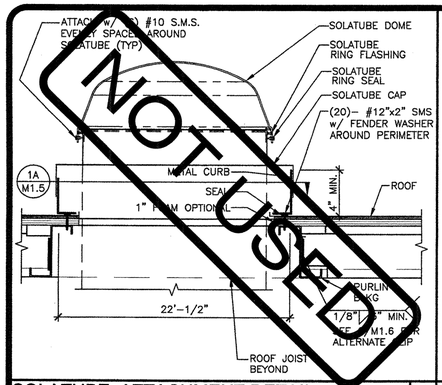

NOT USED

SOLATUBE ATTACHMENT DETAIL — SCALE : 1-1/2" = 1'-0" — 1

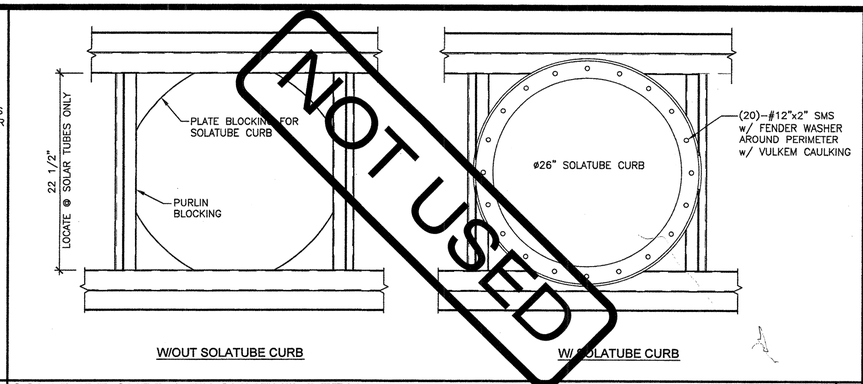

NOT USED

SOLATUBE CURB ATTACHMENT DETAIL — SCALE : 1 1/2" = 1'-0" — 1A

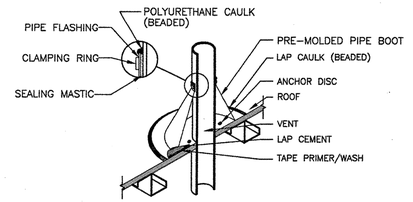

VENT THRU ROOF PENETRATION DETAIL — N.T.S — 2

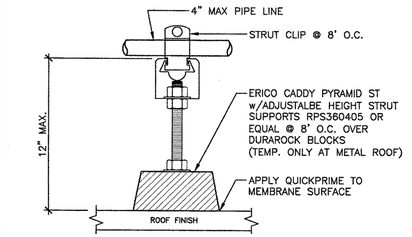

NOTE: IF PIPE LINE SPANS GREATER THAN 1'-0" BETWEEN BETWEEN THE WALL SUPPORT AND THE HVAC UNIT, POSITIVE ATTACHMENT MUST BE PROVIDED BETWEEN THE BLOCK AND THE METAL ROOF.

CONDENSATE / GAS — N.T.S — 3

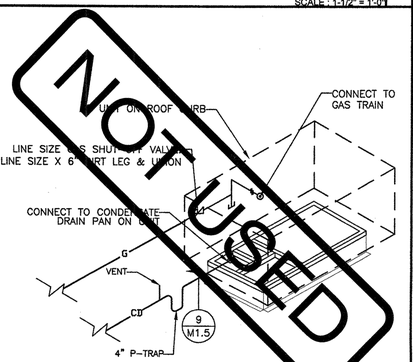

NOT USED

HVAC UNIT PIPING — N.T.S — 4

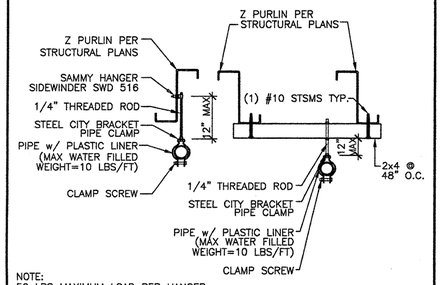

PIPING DETAIL — SCALE : 1 1/2" = 1'-0" — 5

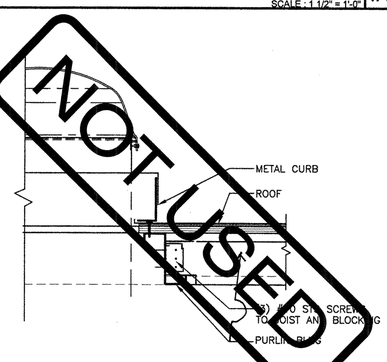

NOT USED

ALTERNATE CLIP DETAIL — SCALE : 1 1/2" = 1'-0" — 6

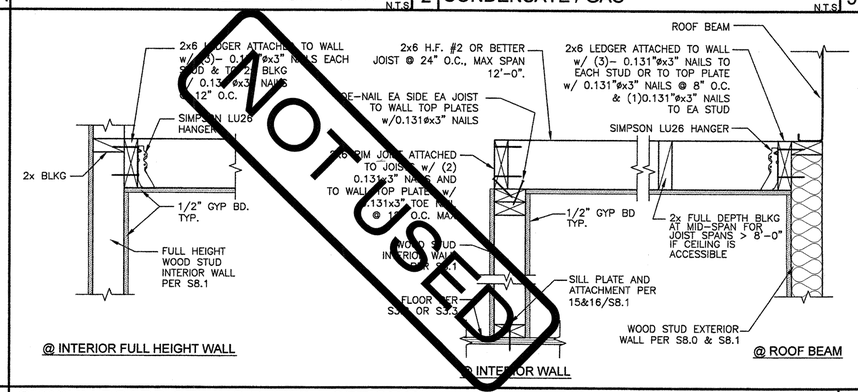

NOT USED

GYPSUM BOARD CEILING DETAIL - OPTIONAL — SCALE : 1 1/2" = 1'-0" — 8

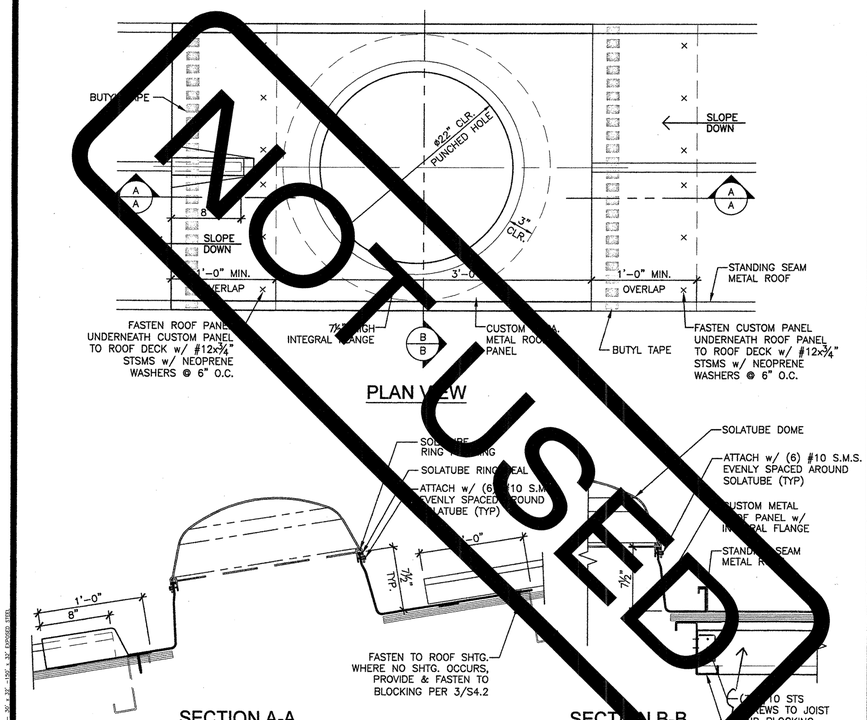

NOT USED

OPTIONAL SOLATUBE DETAILS — SCALE : 1 1/2" = 1'-0" — 15

NOT USED — 11

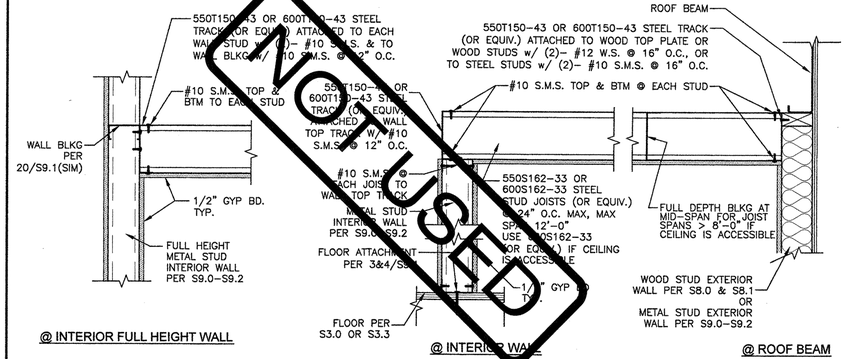

NOT USED

GYPSUM BOARD CEILING DETAIL w/STEEL STUDS - OPTIONAL — SCALE : 1 1/2" = 1'-0" — 13

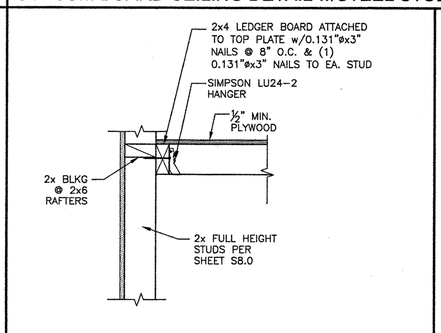

NOT USED

DETAIL w/ WOOD STUD - OPTION — 17

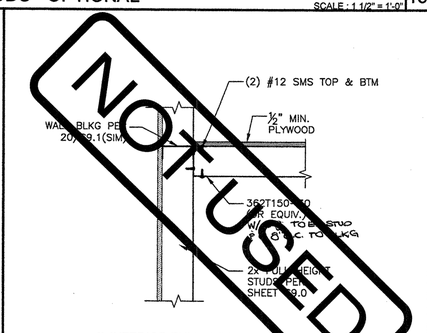

NOT USED

DETAIL w/ STEEL STUD - OPTION — 18

AMS
American Modular Systems
787 Spreckels Ave.Manteca, CA 95336
Phone (209) 825-1921 - Fax (209) 825-7018
americanmodular.com

MODULAR MANUFACTURER PROPRIETARY STATEMENT

THESE DRAWINGS AND THE MATERIAL CONTAINED THEREIN ARE THE PROPERTY OF AMERICAN MODULAR SYSTEMS, INC. (AMS) AND SHALL NOT BE REPRODUCED, COPIED OR OTHERWISE DISPOSED OF DIRECTLY OR INDIRECTLY AND SHALL NOT BE USED IN WHOLE OR IN PART TO ASSIST IN THE MAKING OF OR FOR THE PURPOSE OF FURNISHING ANY INFORMATION FOR THE MAKING OF DRAWINGS, PRINTS, APPARATUS OR PARTS THEREOF WITHOUT THE FULL KNOWLEDGE AND WRITTEN CONSENT OF AMS. ALL PATENTABLE MATERIAL CONTAINED HEREIN AND ORIGINATING WITH AMS SHALL BE THE SOLE PROPERTY OF AMS.

PRE–CHECKED SET NAME

30' x 32' THRU 150' x 32' BUILDINGS

SITE SPECIFIC PROJECT NAME

SHEET TITLE

MECHANICAL ROOF DETAILS

MANUFACTURER PROFESSIONAL OF RECORD ON PC

LICENSED ARCHITECT RAMON PATRICK GUNNARSON No. C12631 Ren. 03-31-17 STATE OF CALIFORNIA

PROJECT SPECIFIC STATE AGENCY APPROVAL

IDENTIFICATION STAMP DIV. OF THE STATE ARCHITECT 02 II 6495 AC TM DATE 12-15-2017

ORIGINAL PC STATE AGENCY APPROVAL

IDENTIFICATION STAMP DIV. OF THE STATE ARCHITECT CA. DEPT. OF GENERAL SERVICES PC 02-113921 AC — DATE 6/19/2015

PRE–CHECK (PC) DOCUMENT – CODE: 2013 CBC
A SEPARATE PROJECT APPLICATION FOR CONSTRUCTION IS REQUIRED

REVISIONS

1
2
3
4

DRAWN BY:
SCALE: AS NOTED
DATE:

SHEET NUMBER

M1.6

1. CEILING GRID SYSTEMS IN SEISMIC ZONES D, E, F, MUST BE RATED "HEAVY DUTY", AS DEFINED BY ASTM C635. PROVIDE GRID COMPONENTS AS SPECIFIED IN TABLE A BELOW, OR APPROVED EQUAL. GRID METAL FRAMING PIECES SHALL BE DESIGNED TO CARRY A MEAN ULTIMATE TEST LOAD OF NOT LESS THAN 180 LBS. IN COMPRESSION AND TENSION, PER ASTM E580.

2. SUSPENSION WIRE SHALL BE CLASS 1 ZINC-COATED (GALVANIZED) CARBON STEEL CONFORMING TO ASTM A641. WIRE SHALL BE #12 GAGE WITH SOFT TEMPER AND A MINIMUM TENSILE STRENGTH OF 70 KSI.

3. WHEN HANGER AND BRACING WIRES ARE ATTACHED TO CONCRETE ABOVE, TESTS PER D.S.A. IR 25-2.13 SECTION 6.8 MUST BE PERFORMED. POWER ACTUATED FASTENERS IN CONCRETE ARE NOT ALLOWED FOR BRACING WIRE.

4. 12 GA. (MINIMUM) HANGER WIRES MAY BE USED FOR UP TO AND INCLUDING 4'-0" x 4'-0 GRID SPACING, ATTACH TO MAIN RUNNER. SPLICES WILL NOT BE PERMITTED IN ANY HANGER WIRES UNLESS SPECIFICALLY APPROVED BY D.S.A.

5. PROVIDE 12 GA. HANGER WIRES WITHIN 8" OF THE ENDS OF ALL MAIN AND CROSS RUNNERS OR AT 1/4 OF THE LENGTH OF THE END TEE, WHICHEVER IS LESS, AT THE PERIMETER OF THE CEILING AREA.

6. PROVIDE TRAPEZE OR OTHER SUPPLEMENTARY SUPPORT MEMBERS AT OBSTRUCTIONS TO MAINTAIN HANGER SPACING. PROVIDE ADDITIONAL HANGERS, STRUTS OR BRACES AS REQUIRED AT ALL CEILING BREAKS, SOFFITS OR DISCONTINUOUS AREAS. HANGER WIRES THAT ARE MORE THAN 1:6 OUT OF PLUMB ARE TO HAVE COUNTER-BRACED WIRES.

7. CEILING GRID MEMBERS SHALL BE ATTACHED TO TWO (2) ADJACENT WALLS. CEILING GRID MEMBERS SHOULD BE AT LEAST 3/4 INCH CLEAR OF OTHER WALLS. IF WALLS RUN DIAGONALLY TO CEILING GRID SYSTEM RUNNERS, ONE END OF MAIN AND CROSS RUNNERS SHOULD BE FREE AND A MINIMUM OF 3/4 INCH CLEAR OF WALL.

8. PERIMETER SUPPORT ANGLES SHALL BE AT LEAST 2 INCHES WIDE, OR USE PROPRIETARY ANGLES & SEISMIC CLIPS THAT HAVE A VALID EVALUATION REPORT.

9. AT THE PERIMETER OF THE CEILING AREA WHERE MAIN OR CROSS RUNNERS ARE NOT CONNECTED TO THE ADJACENT WALL, PROVIDE INTERCONNECTION BETWEEN THE RUNNERS AT THE FREE END TO PREVENT LATERAL SPREADING. A METAL STRUT OR A 16 GA. WIRE WITH A POSITIVE MECHANICAL CONNECTION TO THE RUNNERS MAY BE USED. WHERE THE PERPENDICULAR DISTANCE FROM THE WALL TO THE FIRST PARALLEL RUNNERS IS 8" OR LESS, THIS INTERLOCK IS NOT REQUIRED.

10. CEILING AREAS EXCEEDING 2,500 SQUARE FEET SHALL HAVE A SEISMIC SEPARATION JOINT.

11. EXPANSION JOINTS SHALL BE PROVIDED AT INTERSECTIONS OF CORRIDORS, LOBBIES AND OTHER SIMILAR AREAS.

12. PENETRATIONS THROUGH THE CEILING, SUCH AS FIRE SPRINKLERS, SHALL HAVE A 2 INCH OVERSIZED RING, SLEEVE OR ADAPTER TO ALLOW FREE MOVEMENT INDEPENDENT OF THE CEILING. ALTERNATE: A FLEXIBLE SPRINKLER FITTING THAT ALLOWS 1 INCH OF MOVEMENT CAN BE USED.

13. LATERAL FORCE BRACING IS REQUIRED FOR ALL CEILINGS, EXCEPT CEILING AREAS OF 144 SQUARE FEET OR LESS WITH PERIMETER WALLS THAT ARE DESIGNED TO CARRY THE CEILING LATERAL FORCES. SPACING OF BRACING ASSEMBLIES MUST BE SHOWN ON THE PLANS.

14. LATERAL FORCE BRACING CONSISTS OF A SET OF 1 COMPRESSION STRUT AND FOUR #12 GA. SPLAYED BRACING WIRES, ORIENTED 90 DEGREES FROM EACH OTHER AT THE FOLLOWING SPACING:
    (A) FOR SCHOOL BUILDINGS, PLACE SETS OF SPLAY WIRES AT A SPACING NOT MORE THAN 8 FEET BY 12 FEET ON CENTER, PER IR 25.2-13 & 5.2
    (B) PROVIDE SPLAY WIRES AT LOCATIONS NOT MORE THAN 1/2 THE ABOVE SPACING FROM EACH PERIMETER WALL OR AT THE EDGE OF VERTICAL CEILING OFFSETS. THE SLOPE OF THESE WIRES SHOULD NOT EXCEED 45 DEGREES FROM THE PLANE OF THE CEILING AND SHOULD BE TAUT WITHOUT CAUSING THE CEILING TO LIFT. SPLICES IN BRACING WIRES ARE NOT PERMITTED WITHOUT SPECIAL D.S.A. APPROVAL.

15. COMPRESSION STRUTS SHALL BE ABLE TO RESIST THE VERTICAL PULL INDUCED BY BRACING WIRES, AND SHALL NOT BE MORE THAN 1:6 OUT OF PLUMB.

16. FASTEN HANGER WIRES WITH NOT LESS THAN 3 TIGHT TURNS WITHIN A DISTANCE OF 3 INCHES. FASTEN SPLAY WIRES WITH 4 TIGHT TURNS WITHIN A DISTANCE OF 1-1/2 INCHES. HANGER OR BRACING WIRE ANCHORS TO THE STRUCTURE SHOULD BE INSTALLED IN SUCH A MANNER THAT THE DIRECTION OF THE WIRE ALIGNS AS CLOSELY AS POSSIBLE WITH THE DIRECTION OF THE FORCES ACTING ON THE WIRE.

17. SEPARATE ALL CEILING HANGING AND BRACING WIRES AT LEAST 6 INCHES FROM ALL UNBRACED DUCTS, PIPES, CONDUIT ETC.

18. ATTACH ALL LIGHT FIXTURES AND AIR TERMINALS TO THE CEILING GRID RUNNERS WITH SCREWS OR APPROVED FASTENERS AS REQUIRED TO RESIST A HORIZONTAL FORCE EQUAL TO THE FIXTURES' WEIGHT. MINIMUM OF TWO ATTACHMENTS ARE REQUIRED AT EACH LIGHT FIXTURE.

19. FLUSH OR RECESSED LIGHT FIXTURES AND AIR TERMINALS WEIGHING LESS THAN 56 POUNDS MAY BE SUPPORTED DIRECTLY ON THE RUNNERS OF A HEAVY DUTY GRID SYSTEM, BUT THEY MUST HAVE A MINIMUM OF TWO #12 GA. SLACK SAFETY WIRES ATTACHED AT DIAGONAL CORNERS AND ANCHORED TO THE STRUCTURE ABOVE. FIXTURES WEIGHING LESS THAN 10 POUNDS MAY HAVE AT LEAST ONE #12 GA. SLACK SAFETY WIRE.

20. LIGHT FIXTURES AND OTHER CEILING DEVICES WEIGHING MORE THAN 56 POUNDS SHALL BE INDEPENDENTLY SUPPORTED BY NO LESS THAN FOUR (4) TAUT #12 GAGE WIRES, ATTACHED TO THE STRUCTURE ABOVE. WIRES MUST BE ABLE TO SUPPORT FOUR (4) TIMES THE WEIGHT OF THE UNIT.

21. ALL LIGHT-WEIGHT MISCELLANEOUS DEVICES, SUCH AS STROBE LIGHTS, SPEAKERS, ETC., SHALL BE ATTACHED TO THE CEILING GRID PER SECTION 7.3.1 OF D.S.A. IR 25-2.13. IN ADDITION, DEVICES WEIGHING MORE THAN 10 LBS SHALL HAVE A #12 SLACK SAFETY WIRE ANCHORED TO THE STRUCTURE ABOVE PER SECTION 7.2.2 OF D.S.A. IR 25-2.13. DEVICES WEIGHING MORE THAN 20 LBS. SHALL BE SUPPORTED FROM THE STRUCTURE ABOVE PER SECTION 7.3.4 OF D.S.A. IR 25-2.13.

22. PANELS THAT WEIGH MORE THAN 0.5 LBS/SQ.FT. (PSF), OTHER THAN MINERAL FIBER ACOUSTIC TILES, SHALL BE POSITIVELY ATTACHED TO CEILING SUSPENSION RUNNERS.

23. ACOUSTICAL PANELS SHALL BE 5/8" MINIMUM THICK, MINERAL FIBERBOARD OR VINYL-FACED FIBERGLASS, LAY-IN PANELS, SQUARE EDGE, ASTM FLAME SPREAD CLASS T, 24"x48" MODULAR SIZE, LIGHT REFLECTION 75% MINIMUM, NOISE REDUCTION COEFFICIENT OF 0.65 MINIMUM, MAXIMUM SMOKE DENSITY NOT TO EXCEED 450. FLAME SPREAD RATING MAXIMUM OF 200. PANELS ARE NOT ALLOWED TO SUPPORT ANY FIXTURE, TERMINAL OR DEVICE.

TABLE A - HEAVY DUTY GRID COMPONENTS

MANUFACTURER	MAIN TEE	H.D. 4' CROSS TEE	H.D. 2' CROSS TEE	RUNNER SPLICE DETAIL
DONN/USG	DX-26	DX-424	DX-216	N/A
ARMSTRONG	7301	XL7341	XL8320	N/A
CHICAGO/ROCKFON	200.01	1274.01	1202.01	N/A

NOTE: ALL GRID COMPONENTS SHALL BE BY THE SAME MANUFACTURER.

02-113921 - 30'x32' - 150'x32' EXPOSED STEEL SAVED: 6/9/2015 4:57 PM 4:23 PM PLOTTED: 6/9/2015

METAL SUSPENSION SYSTEMS FOR LAY IN PANEL CEILING

BARD WALL HUNG

HVAC CFM CHART

MODEL #	DESCRIPTION	MAX. CFM	UNIT WEIGHT (LBS.)	EER	COP	CLIMATE ZONE(S)
~~S43H1-A~~	~~3-1/2 TON HEAT PUMP~~	~~1250~~	~~550~~	~~10.5~~	~~3.2~~	~~1-16~~
S49H1-A	4 TON HEAT PUMP	1400	550	10.0	3.0	1-16
S61H1-A	5 TON HEAT PUMP	1450	580	10.4	3.0	1-16

BARD Q-TEC

HVAC CFM CHART (crossed out)

MODEL #	DESCRIPTION	MAX. CFM	UNIT WEIGHT (LBS.)	EER	COP	CLIMATE ZONE(S)
Q42H2-4	3-1/2 TON HEAT PUMP	1300	570	9.0	3.0	1-16
Q48H2-4	4 TON HEAT PUMP	1400	600	9.0	3.0	1-16
Q60H2-A	5 TON HEAT PUMP	1550	600	9.0	3.0	1-16

CARRIER ROOF MOUNT

HVAC CFM CHART (crossed out)

MODEL #	DESCRIPTION	MAX. CFM	UNIT WEIGHT (LBS.)	SEER		CLIMATE ZONE(S)
50VT-A42	3-1/2 TON HEAT PUMP	1400	472	14		1-16
50VT-A48	4 TON HEAT PUMP	1600	460	14		1-16
50VT-A60	5 TON HEAT PUMP	1750	515	14		1-16

CARRIER SPLIT DX SYSTEM

HVAC CFM CHART

MODEL #	DESCRIPTION	AIR HANDLER MODEL #	MAX. CFM	AIR HANDLER UNIT WEIGHT (LBS.)	EXTERIOR UNIT WEIGHT (LBS.)	SEER	CLIMATE ZONE(S)
25HBB4-42	3-1/2 TON HEAT PUMP	FX4CN0420	3810	170	246	14	1-16
25HBB4-48	4 TON HEAT PUMP	FX4CN0480	4046	170	240	14	1-16
25HBB4-60	5 TON HEAT PUMP	FX4CN0600	4046	198	279	14	1-16

HVAC SCHEDULE

BUILDING SIZE	# OF HVAC: 3 ½ TON HVAC	4 TON HVAC	5 TON HVAC
☐ 30' x 32'	1		
☐ 40' x 32'		1	
☐ 50' x 32'		2	
☒ 60' x 32'	2		
☐ 70' x 32'		2	
☐ 80' x 32'	3		
☐ 90' x 32'	3		
☐ 100'x 32'		3	
☐ 110' x 32'		3	
☐ 120' x 32'		3	
☐ 130' x 32'	4		
☐ 140' x 32'	4		
☐ 150' x 32'		4	

INSULATION SCHEDULE

ZONE	WALL	ROOFS: BATTS	ROOFS: OTHER	FLOORS (NON-CONCRETE)	CONCRETE FLOORS
1-14, & 15	*R-13	**R-19	***R-1	R-13	–
16	*R-13	**R-19	***R-1	R-13	–

*R-5 RIGID INSULATION TO BE USED OVER METAL FRAMED WALLS
**R-19 w/ 22 GA WIRE @ 16" O.C.
***R-1 MAY BE ACHEIVED w/ POLYSTYRENE OR INSULATION TAPE APPLIED TO TOP FLANGE OF PURLINS, OR EQUAL.

HVAC SCHEDULES

HEATING VENTILATING AND AIR CONDITIONING (HVAC)

1. HEAT PUMP: SINGLE PACKAGE WALL-MOUNTED AIR-TO-AIR ELECTRIC HEAT PUMP UNIT SHALL BE RATED IN ACCORDANCE WITH A.R.I. STANDARD 240-77. MAXIMUM AC SIZE FOR THIS BUILDING WILL BE A 5-TON UNIT. ALL UNITS SHALL BE 230/208 VOLT, 1 PHASE SYSTEM, UL TESTED & APPROVED OR COMPARABLE, AND MEET CURRENT ENERGY STANDARDS.
    A. THE SYSTEM SHALL MAINTAIN AN AUTOMATICALLY CONTROLLED INDOOR CLASSROOM TEMPERATURE OF 78 DEGREES F. WHEN THE OUTDOOR DRY BULB TEMPERATURE VARIES BETWEEN 100 DEGREES F. IN THE SUMMER.
    B. THE SYSTEM MUST MAINTAIN THE ABOVE TEMPERATURE WHEN THE DAMPER IS ADJUSTED TO USE APPROXIMATELY ONE-THIRD FRESH AIR.

2. DUCTWORK
    A. CONSTRUCT ALL DUCTWORK OF GALVANIZED SHEET METAL IN ACCORDANCE WITH C.M.C., ASHRAE GUIDE EQUIPMENT VOLUME, AND SMACNA LOW VELOCITY DUCT CONSTRUCTION MANUAL, LATEST EDITIONS. ALL DUCTWORK SHALL BE INSULATED WITH 1" THICK FIBERGLASS DUCT WRAP WITH VAPOR BARRIER. PROVIDE 1" DUCT ATTENUATION AT ALL DUCTWORK WITHIN 2'-0" OF HVAC UNIT.
    B. NON-METALLIC DUCTWORK OPTION: IN ACCESSIBLE CONCEALED PORTIONS OF DUCT SYSTEM, RIGID 1" FIBERGLASS OR INSULATED FLEX-DUCT WITH VAPOR BARRIER MAY BE SUBSTITUTED FOR SHEET METAL DUCTWORK. ALL DUCTWORK WITHIN 2'-0" OF THE HVAC UNIT AND ALL INTERFACE CONNECTIONS SHALL BE METAL. DUCTWORK AND REINFORCEMENT SHALL BE DESIGNED FOR 2" STATIC PRESSURE. REFERENCE BRANDS: OWENS-CORNING FIBERGLASS DUCTBOARD, 1" THICK, AND MICRO-AIRE TYPE 475. NON-METALLIC DUCTWORK SHALL CONFORM TO NFPA 90-A AND SMACNA CLASS 1 RATING.

3. AIR DUCT INSULATION AND LININGS SHALL COMPLY WITH FLAME SPREAD LESS THAN OR EQUAL TO 25, SMOKE GENERATION LESS THAN OR EQUAL TO 50.

4. SUPPLY AIR DIFFUSERS SHALL BE 675 CFM MAXIMUM, 12" ROUND. 1" FIBERGLASS OR FLEXDUCT DUCTWORK SPECIFICALLY DESIGNED TO PROVIDE AIR THERMAL COOLING SYSTEMS. 24"x8"x1" MICRO-AIRE TYPE #475 OWENS-CORNING, KNAUF, CERTAINTEED, OR EQUAL AND 90-B: UL #131 TEST, CLASS 1 RATING WITH "SMACNA".

5. REGISTERS AND DIFFUSERS: PROVIDE THREE (MINIMUM) 4-WAY THROW AIR DIFFUSERS AS MANUFACTURED BY CARNES, TITUS, HART AND COOLEY, METALAIRE, SHOEMAKER, BARBER-COLEMAN OR KRUEGER COMMERCIAL GRADE GRILLS AND REGISTERS.

6. AIR CONDITIONING CONTROLS: PROVIDE ELECTRONIC PROGRAMMABLE THERMOSTAT. THERMOSTAT SHALL HAVE THE FOLLOWING FUNCTIONS:
    A. 5 AND 2 WEEKDAY/WEEKEND PROGRAMMING DAYS WITH 4 SEPARATE TIME/TEMPERATURE SETTINGS FOR A 24-HOUR PERIOD.
    B. KEY BOARD LOCKOUT SWITCH.
    C. PROGRAMMABLE DISPLAY.
    D. 2-HOUR OVERRIDE MINIMUM.
    E. STATUS INDICATED LED'S.
    F. BATTERY BACK-UP.
    G. PROVIDE LOCKING CLEAR THERMOSTAT COVER WITH THERMOSTAT COVER WITH ACCESS HOLE FOR PROGRAM OVERRIDE. WHITE RODGERS IF92-371. MOUNT TOP OF BOX @ 48" A.F.F. MAX

7. THERMAL INSULATION
    A. ROOF INSULATION: R-25 WITH 22 GA. WIRE @ 16" O.C.
    B. WALLS INSULATION: R-13 KRAFT FACED. (R-5 INSULATION OVER METAL FRAMED WALLS)
    C. NON-CONCRETE FLOORS INSULATION: R-13
    D. CONCRETE FLOORS INSULATION: INSULATION NOT REQUIRED.
    E. FLAME SPREAD AND SMOKE DEVELOPMENT SHALL CONFORM TO CALIFORNIA BUILDING CODE SEC. 720.

8. FACTORY-MADE AIR DUCTS
    A. FACTORY-MADE AIR DUCTS SHALL BE APPROVED FOR THE USE INTENDED OR SHALL CONFORM TO THE REQUIREMENTS OF C.M.C. SECTION 601.0.
    B. EACH PORTION OF A FACTORY-MADE AIR DUCT SYSTEM SHALL BE IDENTIFIED BY THE MANUFACTURER WITH A LABEL OR OTHER SUITABLE IDENTIFICATION INDICATING COMPLIANCE WITH C.M.C. SECTION 601.0 AND ITS CLASS DESIGNATION. THESE DUCTS SHALL BE LISTED AND SHALL BE INSTALLED IN ACCORDANCE WITH THE TERMS OF THEIR LISTING AND THE REQUIREMENTS OF C.M.C. SECTION 601.0.
    C. DUCT SUPPORT FLEX DUCT TO BE SUPPORTED WITH 1-1/2" WIDE x26 GA. GALV. STRAP @ MAX 6'-0" O.C. ATTACH TO RAFTER WITH TWO #8 S.M.S. @ EACH END.
    D. SUPPLY AIR PLENUM TO BE SUPPORTED WITH 1-1/2" WIDE x26 GA. GALV. STRAPS MINIMUM 2 PER PLENUM.
    E. SUPPLY AIR BOX AND DIFFUSERS TO BE SUPPORTED WITH (2) 12 GA. HANGER WIRES TO BOX @ OPPOSITE CORNERS.
    F. SUPPLY AIR BOX AND DIFFUSERS TO BE BRACED WITH (2) 12 GA. SLACK WIRES TO BOX @ OPPOSITE CORNERS. ATTACH SUPPLY AIR DIFFUSERS TO CEILING GRID TO RESIST A LATERAL LOAD EQUAL TO THE WEIGHT OF THE DIFFUSER AND SUPPLY AIR BOX WITH TWO #8 S.M.S.

9. FIREBLOCKING SHALL BE PROVIDED IN THE FOLLOWING LOCATIONS:
    A. IN CONCEALED SPACES OF STUD WALLS AND PARTITIONS, INCLUDING FURRED SPACES;
    B. AT THE CEILING AND FLOOR LEVELS;
    C. AND AT 10-FOOT (3048mm) INTERVALS BOTH VERTICAL AND HORIZONTAL.
    REFERENCE 2013 CBC SECTION 718.

10. THE INTERIOR ENVIRONMENT SHALL BE ASSEMBLED WITH PRODUCTS THAT CONTRIBUTE TO A HEALTHY INDOOR AIR QUALITY (IAQ). THE FOLLOWING SHALL COMPLY TITLE 24, PART 11 ("CAL-GREEN"), SECTION 5.504.4:
    A. ADHESIVES, SEALANTS, CAULKS — SECTION 5.504.4.1
    B. PAINTS, COATINGS — SECTION 5.504.4.3
    C. AEROSOL PAINTS & COATINGS — SECTION 5.504.4.3.1
    D. CARPET SYSTEMS — SECTION 5.504.4.4
    1. CARPET SHALL MEET CRI'S "GREEN LABEL PLUS" PROGRAM, NSF/ANSI '140 GOLD' LEVEL, OR OTHER APPROVED TESTING PER 5.504.4.4.
    E. CARPET CUSHION OR PAD — SECTION 5.504.4.4.1
    1. CUSHION/PAD SHALL MEET THE CRI'S "GREEN LABEL" PROGRAM.
    F. COMPOSITE WOOD PRODUCTS — SECTION 5.504.4.5
    1. ALL COMPOSITE WOODS MUST NOT EXCEED THE FORMALDEHYDE LIMITS AS SPECIFIED IN ARB'S "AIR TOXICS CONTROL MEASURE" (17 CCR 93120), OR NON-EXEMPT MATERIALS PER TABLE 5.504.4.5.
    G. RESILIENT FLOORING SYSTEMS — SECTION 5.504.4.6
    1. RESILIENT FLOORING SHALL BE CERTIFIED UNDER THE "FLOORSCORE" PROGRAM BY RFCI, COMPLY WITH CA-CHPS 01350, OR OTHER APPROVED TESTING PER 5.504.4.6.

HVAC NOTES

American Modular Systems
787 Spreckels Ave.Manteca, CA 95336
Phone (209) 825-1921 - Fax (209) 825-7018
americanmodular.com

MODULAR MANUFACTURER PROPRIETARY STATEMENT
THESE DRAWINGS AND THE MATERIAL CONTAINED THEREIN ARE THE PROPERTY OF AMERICAN MODULAR SYSTEMS, INC. (AMS) AND SHALL NOT BE REPRODUCED, COPIED OR OTHERWISE DISPOSED OF DIRECTLY OR INDIRECTLY AND SHALL NOT BE USED IN WHOLE OR IN PART TO ASSIST IN THE MAKING OF OR FOR THE PURPOSE OF FURNISHING ANY INFORMATION FOR THE MAKING OF DRAWINGS, PRINTS, APPARATUS OR PARTS THEREOF WITHOUT THE FULL KNOWLEDGE AND WRITTEN CONSENT OF AMS. ALL PATENTABLE MATERIAL CONTAINED HEREIN AND ORIGINATING WITH AMS SHALL BE THE SOLE PROPERTY OF AMS.

PRE-CHECKED SET NAME
30' x 32' THRU 150' x 32' BUILDINGS

SITE SPECIFIC PROJECT NAME

SHEET TITLE
CEILING & MECHANICAL NOTES, SCHEDULES

MANUFACTURER PROFESSIONAL OF RECORD ON PC
LICENSED ARCHITECT RANDALL PATRICK CAVANAGH No. C12631 Ren. 03-31-17 STATE OF CALIFORNIA

PROJECT SPECIFIC STATE AGENCY APPROVAL
IDENTIFICATION STAMP DIV. OF THE STATE ARCHITECT
02 116495
AC TM FLS SS
DATE 12-18-2017

ORIGINAL PC STATE AGENCY APPROVAL
IDENTIFICATION STAMP DIV. OF THE STATE ARCHITECT CA. DEPT. OF GENERAL SERVICES
PC 02-113921
AC FLS SS
DATE 6/19/2015

PRE-CHECK (PC) DOCUMENT – CODE: 2013 CBC
A SEPARATE PROJECT APPLICATION FOR CONSTRUCTION IS REQUIRED

REVISIONS
1
2
3
4

DRAWN BY:
SCALE: AS NOTED
DATE:
SHEET NUMBER
M1.7

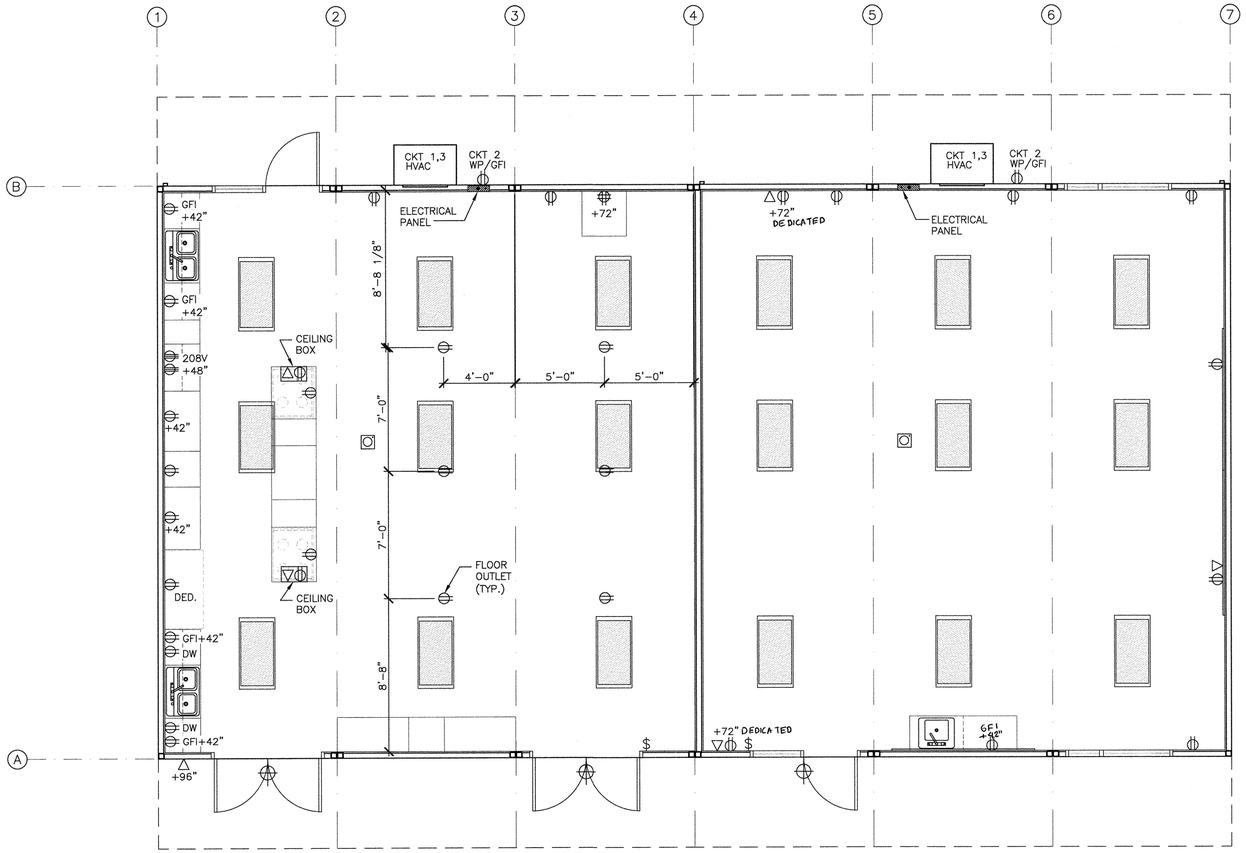

NOTE:
SEE AOR PLAN FOR FIRE ALARM

DEMONSTRATION KITCHEN ELECTRICAL PLAN

SCALE: 1/4" = 1' - 0" | 1

NOT USED | 2

NOT USED | 3

GENERAL NOTES

NOTES

A. THE PROJECT ARCHITECT SHALL BE RESPONSIBLE FOR THE PLACEMENT OF HEAT, SMOKE DETECTORS, EVACS AND PULL STATIONS AND COMPLETE FIRE ALARM SYSTEM WHEN THE SITE SPECIFIC PROJECT IS REQUIRED TO MEET THE PROVISIONS OF SB 575 & CBC 907.2.3.

B. AT ANY SPACE REQUIRING 2 OR MORE EXITS PROVIDE EXIT SIGNS (CBC 1011) AND EMERGENCY EXIT ILLUMINATION (CBC 1006).

C. ANY MONITORING EQUIPMENT OR ASSOCIATED SENSORS ARE SITE SPECIFIC AND ARE NOT INCLUDED IN THIS BASE PC.

D. LIGHTING FIXTURES MAY BE INSTALLED ROTATED 90° FROM SHOWN TO MATCH T-BAR GRID LAYOUT.

1. F.A.: STUB-UP ALL FIRE ALARM JUNCTION BOXES TO ACCESSIBLE ATTIC SPACE WITH 1/2" MIN. GALV. THIN WALL TUBING (EMT). DO NOT CONNECT FIRE ALARM CONDUIT WITH ANY OTHER ELECTRICAL CONDUIT.
2. IF OPTIONAL DOOR OCCURS, A PULL STATION J-BOX AND EXIT SIGN ARE REQUIRED. PULL STATIONS ARE REQUIRED AT EVERY EXIT.
3. STUB OUT LOCATIONS FOR ELECTRICAL PANEL, FIRE ALARM, AND DATA BOXES SHOWN ARE DIAGRAMMATICAL ONLY. EXACT LOCATIONS MAY VARY +/- SEVERAL FEET. PLEASE CONTACT AMERICAN MODULAR SYSTEMS FOR EXACT LOCATIONS. POINT OF CONNECTION WILL BE AT FACE OF BUILDING.
4. SEE TYPICAL CLASSROOM LAYOUT FOR LOCATIONS OF ALL DEVICES. FIXTURE MOUNTING SHALL COMPLY WITH CALIFORNIA SEISMIC REGULATIONS.
5. THE LIGHTS FOR EACH ROOM OVER 250' SQ FT SHALL BE CONTROLLED BY ULTRASONIC OCCUPANCY SENSOR--WATT STOPPER W-500A, W-1000A, OR W-2000A (OR EQUAL) BASED ON THE ROOM SIZE, IN CONJUNCTION WITH BI-LEVEL SWITCHING.

ELECTRICAL SYMBOLS

- INCANDESCENT WALL MOUNTED INTERIOR LIGHT FIXTURE
- UNCONTROLLED-DUPLEX WALL CONVENIENCE OUTLET – MOUNT @ +18" A.F.F. TO CENTERLINE – U.O.N.
- CONTROLLED-DUPLEX WALL CONVENIENCE OUTLET – MOUNT @ +18" A.F.F. TO CENTERLINE – U.O.N. TO BE CONTROLLED BY OCCUPANCY SENSOR.
- COMBO-DUPLEX WALL CONVENIENCE OUTLET – MOUNT @ +18" A.F.F. TO CENTERLINE – U.O.N.
- FOURPLEX WALL OUTLET – MOUNT @ +18" A.F.F. TO CENTER LINE – U.O.N.
- W.P GFCI – WEATHER PROOF GROUND FAULT CIRCUIT INTERRUPT OUTLET – MOUNT @ 18" A.F.F. TO CENTERLINE – U.O.N.
- GFCI – GROUND FAULT CIRCUIT INTERRUPT OUTLET – MOUNT @ 18" A.F.F. TO CENTERLINE – U.O.N.
- $S – SINGLE POLE SOLA TUBE SWITCH – MOUNT @ +48" A.F.F. MAX TO TOP OF BOX.
- $ – CONTROLLED-SINGLE POLE LIGHT SWITCHES – MOUNT @ +48" A.F.F. MAX TO TOP OF BOX – HUBBELL PREMIUM, BRYANT HEAVY DUTY, OR LEVITON SPECIFICATIONS GRADE.
- J – ELECTRICAL CROSSOVER – J-BOXES – ABOVE CEILING – #1-4"X1", #22 4"X2"
- CLOCK / SPEAKER COMBO – MOUNT @ +90" A.F.F. TO CENTERLINE – U.O.N. – DEVICE BY OTHERS
- a – SWITCH SUBSCRIPTS – a=DEVICE CONTROLLED.
- J – JUNCTION BOX – SIZE / LOCATION A.F.F. / TYPE AS NOTED
- S – SPEAKER – OUTLET ONLY – 4" SQ. BOX WITH SINGLE DEVICE RING AND COVER – MOUNT @ +84" A.F.F. TO CENTERLINE – DEVICE BY OTHERS
- DATA / COMMUNICATION – OUTLET ONLY – 4" SQ BOX WITH SINGLE DEVICE RING AND COVER – MOUNT @ +18" A.F.F. TO CENTERLINE, U.O.N., AND PROVIDE A 3/4" CONDUIT / STUBBED ABOVE CEILING – DEVICE BY OTHERS
- INTERCOM / TELEPHONE – OUTLET ONLY – 4" SQ. BOX WITH SINGLE DEVICE RING AND COVER – MOUNT TOP OF BOX @ +48" A.F.F. U.O.N. AND PROVIDE A 3/4" CONDUIT / STUBBED ABOVE CEILING – DEVICE BY OTHERS
- M – MOTION SENSOR OUTLET – PROVIDE (1) 4" SQ. BOX WITH SINGLE DEVICE RING AND COVER AND ONE 3/4" CONDUIT / STUBBED ABOVE CEILING
- S – SECURITY / INTRUSION KEY PAD – OUTLET ONLY – 4" SQ. BOX w/ SINGLE DEVICE RING AND COVER, MOUNT TOP OF BOX @ +48" A.F.F., AND ONE 3/4" CONDUIT / STUBBED ABOVE CEILING – DEVICE BY OTHERS
- DC – DOOR CONTACT – PROVIDE (1) EMPTY 1/2" DIA EMT THROUGH DOOR HEADER – STUBBED ABOVE CEILING – DEVICE BY OTHERS
- CATV – CATV OUTLET – OUTLET ONLY – PROVIDE (1) 4" SQ. BOX WITH SINGLE DEVICE RING AND COVER – (1) 3/4" DIA CONDUIT – STUBBED ABOVE CEILING – DEVICES BY OTHERS
- F – FIRE ALARM PULL STATION – OUTLET ONLY – PROVIDE (1) 4" SQ. BOX WITH SINGLE DEVICE RING AND COVER – TOP OF OPERATING HANDLE MOUNTED BETWEEN +42" TO +48" A.F.F. – DEVICE BY OTHERS
- FIRE ALARM HORN – OUTLET ONLY – 4" SQ. SINGLE GANG J-BOX WITH BLANK WEATHERPROOF COVER – MOUNTED +90" A.F.F. TO CENTERLINE – DEVICE BY OTHERS
- VISUAL FIRE ALARM ALARM – OUTLET ONLY – 4" SQ. BOX WITH SINGLE DEVICE RING AND COVER – MOUNT SO THAT LENS IS BETWEEN 80"-96" A.F.F. (CEILING MOUNT PER NFPA72 TABLE 6-4.4.1(b)) DEVICE BY OTHERS.
- M – MINI HORN BOX – OUTLET ONLY – SINGLE DEVICE RING AND COVER – MOUNTED +80" A.F.F. TO CENTERLINE BUT NO GREATER THAN +96" – DEVICE BY OTHERS
- T – THERMOSTAT – TOP OF BOX MOUNTED @ +48" A.F.F.
- ULTRASONIC OCCUPANCY SENSOR – MOUNTED TO FINISH CEILING
- ELECTRICAL PANEL – MOUNTED FLUSH WITH WALL FINISH U.O.N.
- 2'x4' LED DROP IN FIXTURE, MODEL: LITHONIA VTLED 4000K SP41 – 40 WATTS MAX (60 WATTS ALLOWABLE AT CZN 16) OR EQUAL
- 24 HOUR EMERGENCY LIGHTING WITH BATTERY BACK-UP – WHERE TWO OR MORE EXITS ARE REQUIRED
- E – EMERGENCY EXIT LIGHT – WHERE TWO OR MORE EXITS ARE REQUIRED
- INCANDESCENT EXTERIOR LIGHT FIXTURE @ EACH DOOR

American Modular Systems
787 Spreckels Ave. Manteca, CA 95336
Phone (209) 825-1921 - Fax (209) 825-7018
americanmodular.com

MODULAR MANUFACTURER PROPRIETARY STATEMENT
THESE DRAWINGS AND THE MATERIAL CONTAINED THEREIN ARE THE PROPERTY OF AMERICAN MODULAR SYSTEMS, INC. (AMS) AND SHALL NOT BE REPRODUCED, COPIED OR OTHERWISE DISPOSED OF DIRECTLY OR INDIRECTLY AND SHALL NOT BE USED IN WHOLE OR IN PART TO ASSIST IN THE MAKING OF OR FOR THE PURPOSE OF FURNISHING ANY INFORMATION FOR THE MAKING OF DRAWINGS, PRINTS, APPARATUS OR PARTS THEREOF WITHOUT THE FULL KNOWLEDGE AND WRITTEN CONSENT OF AMS. ALL PATENTABLE MATERIAL CONTAINED HEREIN AND ORIGINATING WITH AMS SHALL BE THE SOLE PROPERTY OF AMS.

PRE-CHECKED SET NAME

30' x 32' THRU 150' x 32' BUILDINGS

SITE SPECIFIC PROJECT NAME

MARIN COMMUNITY CSD - INDIAN VALLEY CAMPUS 60x32 BUILDING

SHEET TITLE

TYPICAL ELECTRICAL PLAN

MANUFACTURER PROFESSIONAL OF RECORD ON PC

LICENSED ARCHITECT – TIMOTHY PATRICK CUMMINS – No. C12631 Ren. 3-31-19 – STATE OF CALIFORNIA

REGISTERED PROFESSIONAL ENGINEER – JIMMY D. FRISCH – No. S3380 Exp: 03/31/16 – STATE OF CALIFORNIA

PROJECT SPECIFIC STATE AGENCY APPROVAL

IDENTIFICATION STAMP DIV. OF THE STATE ARCHITECT
02 II 6495
AC JM EXPIRATION DATE 12-18-2017

ORIGINAL PC STATE AGENCY APPROVAL

BASED ON PC# 02-113921
PRE-CHECK (PC) DOCUMENT – CODE: 2013 CBC
A SEPARATE PROJECT APPLICATION FOR CONSTRUCTION IS REQUIRED

REVISIONS
1
2
3
4

DRAWN BY:	BA
SCALE:	AS NOTED
DATE:	11/10/17

SHEET NUMBER

E1.0

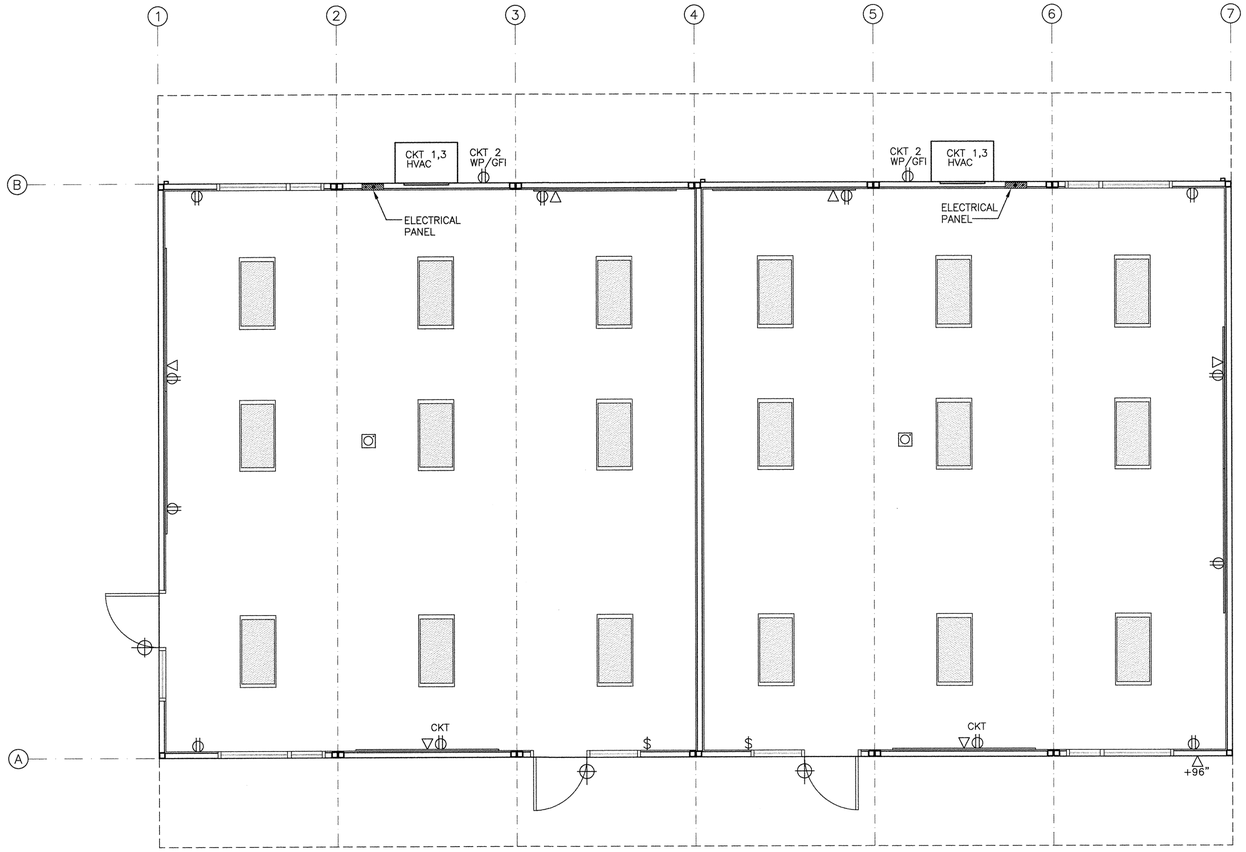

NOTE:
SEE AOR PLAN FOR FIRE ALARM

CLAASSROOM ELECTRICAL PLAN

SCALE: 1/4" = 1'-0" | 1

NOT USED | 2

NOT USED | 3

GENERAL NOTES

NOTES

A. THE PROJECT ARCHITECT SHALL BE RESPONSIBLE FOR THE PLACEMENT OF HEAT, SMOKE DETECTORS, EVACS AND PULL STATIONS AND COMPLETE FIRE ALARM SYSTEM WHEN THE SITE SPECIFIC PROJECT IS REQUIRED TO MEET THE PROVISIONS OF SB 575 & CBC 907.2.3.

B. AT ANY SPACE REQUIRING 2 OR MORE EXITS PROVIDE EXIT SIGNS (CBC 1011) AND EMERGENCY EXIT ILLUMINATION (CBC 1006).

C. ANY MONITORING EQUIPMENT OR ASSOCIATED SENSORS ARE SITE SPECIFIC AND ARE NOT INCLUDED IN THIS BASE PC.

D. LIGHTING FIXTURES MAY BE INSTALLED ROTATED 90° FROM SHOWN TO MATCH T-BAR GRID LAYOUT.

1. F.A.: STUB-UP ALL FIRE ALARM JUNCTION BOXES TO ACCESSIBLE ATTIC SPACE WITH 1/2" MIN. GALV. THIN WALL TUBING (EMT). DO NOT CONNECT FIRE ALARM CONDUIT WITH ANY OTHER ELECTRICAL CONDUIT.
2. IF OPTIONAL DOOR OCCURS, A PULL STATION J-BOX AND EXIT SIGN ARE REQUIRED. PULL STATIONS ARE REQUIRED AT EVERY EXIT.
3. STUB OUT LOCATIONS FOR ELECTRICAL PANEL, FIRE ALARM, AND DATA BOXES SHOWN ARE DIAGRAMMATICAL ONLY. EXACT LOCATIONS MAY VARY +/- SEVERAL FEET. PLEASE CONTACT AMERICAN MODULAR SYSTEMS FOR EXACT LOCATIONS. POINT OF CONNECTION WILL BE AT FACE OF BUILDING.
4. SEE TYPICAL CLASSROOM LAYOUT FOR LOCATIONS OF ALL DEVICES. FIXTURE MOUNTING SHALL COMPLY WITH CALIFORNIA SEISMIC REGULATIONS.
5. THE LIGHTS FOR EACH ROOM OVER 250' SQ FT SHALL BE CONTROLLED BY ULTRASONIC OCCUPANCY SENSOR--WATT STOPPER W-500A, W-1000A, OR W-2000A (OR EQUAL) BASED ON THE ROOM SIZE, IN CONJUNCTION WITH BI-LEVEL SWITCHING.

ELECTRICAL SYMBOLS

- INCANDESCENT WALL MOUNTED INTERIOR LIGHT FIXTURE
- UNCONTROLLED-DUPLEX WALL CONVENIENCE OUTLET - MOUNT @ +18" A.F.F. TO CENTERLINE - U.O.N.
- CONTROLLED-DUPLEX WALL CONVENIENCE OUTLET - MOUNT @ +18" A.F.F. TO CENTERLINE - U.O.N. TO BE CONTROLLED BY OCCUPANCY SENSOR.
- COMBO-DUPLEX WALL CONVENIENCE OUTLET - MOUNT @ +18" A.F.F. TO CENTERLINE - U.O.N.
- FOURPLEX WALL OUTLET - MOUNT @ +18" A.F.F. TO CENTER LINE - U.O.N.
- W.P GFCI: WEATHER PROOF GROUND FAULT CIRCUIT INTERRUPT OUTLET - MOUNT @ 18" A.F.F. TO CENTERLINE - U.O.N.
- GFCI: GROUND FAULT CIRCUIT INTERRUPT OUTLET - MOUNT @ 18" A.F.F. TO CENTERLINE - U.O.N.
- $S: SINGLE POLE SOLA TUBE SWITCH - MOUNT @ +48" A.F.F. MAX TO TOP OF BOX.
- $: CONTROLLED-SINGLE POLE LIGHT SWITCHES - MOUNT @ +48" A.F.F. MAX TO TOP OF BOX - HUBBELL PREMIUM, BRYANT HEAVY DUTY, OR LEVITON SPECIFICATIONS GRADE.
- J: ELECTRICAL CROSSOVER - J-BOXES - ABOVE CEILING - #1-4"X1", #22 4"X2"
- CLOCK / SPEAKER COMBO - MOUNT @ +90" A.F.F. TO CENTERLINE - U.O.N. - DEVICE BY OTHERS
- a: SWITCH SUBSCRIPTS - a=DEVICE CONTROLLED.
- J: JUNCTION BOX - SIZE / LOCATION A.F.F. / TYPE AS NOTED
- S: SPEAKER - OUTLET ONLY - 4" SQ. BOX WITH SINGLE DEVICE RING AND COVER - MOUNT @ +84" A.F.F. TO CENTERLINE - DEVICE BY OTHERS
- DATA / COMMUNICATION - OUTLET ONLY - 4" SQ BOX WITH SINGLE DEVICE RING AND COVER - MOUNT @ +18" A.F.F. TO CENTERLINE, U.O.N., AND PROVIDE A 3/4" CONDUIT / STUBBED ABOVE CEILING - DEVICE BY OTHERS
- INTERCOM / TELEPHONE - OUTLET ONLY - 4" SQ. BOX WITH SINGLE DEVICE RING AND COVER - MOUNT TOP OF BOX @ +48" A.F.F. U.O.N. AND PROVIDE A 3/4" CONDUIT / STUBBED ABOVE CEILING - DEVICE BY OTHERS
- M: MOTION SENSOR OUTLET - PROVIDE (1) 4" SQ. BOX WITH SINGLE DEVICE RING AND COVER AND ONE 3/4" CONDUIT / STUBBED ABOVE CEILING
- S: SECURITY / INTRUSION KEY PAD - OUTLET ONLY - 4" SQ. BOX w/ SINGLE DEVICE RING AND COVER, MOUNT TOP OF BOX @ +48" A.F.F., AND ONE 3/4" CONDUIT / STUBBED ABOVE CEILING - DEVICE BY OTHERS
- DC: DOOR CONTACT - PROVIDE (1) EMPTY 1/2" DIA EMT THROUGH DOOR HEADER - STUBBED ABOVE CEILING - DEVICE BY OTHERS
- CATV: CATV OUTLET - OUTLET ONLY - PROVIDE (1) 4" SQ. BOX WITH SINGLE DEVICE RING AND COVER - (1) 3/4" DIA CONDUIT - STUBBED ABOVE CEILING - DEVICES BY OTHERS
- F: FIRE ALARM PULL STATION - OUTLET ONLY - PROVIDE (1) 4" SQ. BOX WITH SINGLE DEVICE RING AND COVER - TOP OF OPERATING HANDLE MOUNTED BETWEEN +42" TO +48" A.F.F. - DEVICE BY OTHERS
- FIRE ALARM HORN - OUTLET ONLY - 4" SQ. SINGLE GANG J-BOX WITH BLANK WEATHERPROOF COVER - MOUNTED +90" A.F.F. TO CENTERLINE - DEVICE BY OTHERS
- VISUAL FIRE ALARM ALARM - OUTLET ONLY - 4" SQ. BOX WITH SINGLE DEVICE RING AND COVER - MOUNT SO THAT LENS IS BETWEEN 80"-96" A.F.F. (CEILING MOUNT PER NFPA72 TABLE 6-4.4.1(b)) DEVICE BY OTHERS.
- M: MINI HORN BOX - OUTLET ONLY - SINGLE DEVICE RING AND COVER - MOUNTED +80" A.F.F. TO CENTERLINE BUT NO GREATER THAN +96" - DEVICE BY OTHERS
- T: THERMOSTAT - TOP OF BOX MOUNTED @ +48" A.F.F.
- ULTRASONIC OCCUPANCY SENSOR - MOUNTED TO FINISH CEILING
- ELECTRICAL PANEL - MOUNTED FLUSH WITH WALL FINISH U.O.N.
- 2'x4' LED DROP IN FIXTURE, MODEL: LITHONIA VTLED 4000K SP41 - 40 WATTS MAX (60 WATTS ALLOWABLE AT CZN 16) OR EQUAL
- 24 HOUR EMERGENCY LIGHTING WITH BATTERY BACK-UP - WHERE TWO OR MORE EXITS ARE REQUIRED
- E: EMERGENCY EXIT LIGHT - WHERE TWO OR MORE EXITS ARE REQUIRED
- INCANDESCENT EXTERIOR LIGHT FIXTURE @ EACH DOOR

American Modular Systems
787 Spreckels Ave. Manteca, CA 95336
Phone (209) 825-1921 - Fax (209) 825-7018
americanmodular.com

MODULAR MANUFACTURER PROPRIETARY STATEMENT

THESE DRAWINGS AND THE MATERIAL CONTAINED THEREIN ARE THE PROPERTY OF AMERICAN MODULAR SYSTEMS, INC. (AMS) AND SHALL NOT BE REPRODUCED, COPIED OR OTHERWISE DISPOSED OF DIRECTLY OR INDIRECTLY AND SHALL NOT BE USED IN WHOLE OR IN PART TO ASSIST IN THE MAKING OF OR FOR THE PURPOSE OF FURNISHING ANY INFORMATION FOR THE MAKING OF DRAWINGS, PRINTS, APPARATUS OR PARTS THEREOF WITHOUT THE FULL KNOWLEDGE AND WRITTEN CONSENT OF AMS. ALL PATENTABLE MATERIAL CONTAINED HEREIN AND ORIGINATING WITH AMS SHALL BE THE SOLE PROPERTY OF AMS.

PRE-CHECKED SET NAME

30' x 32' THRU 150' x 32' BUILDINGS

SITE SPECIFIC PROJECT NAME

MARIN COMMUNITY CSD - INDIAN VALLEY CAMPUS 60x32 BUILDING

SHEET TITLE

TYPICAL ELECTRICAL PLAN

MANUFACTURER PROFESSIONAL OF RECORD ON PC

LICENSED ARCHITECT - PATRICK J. KENNEDY - No. C 12631 - Ren. 3-31-19 - STATE OF CALIFORNIA

REGISTERED PROFESSIONAL ENGINEER - MANNY D. FRISCO - No. S.3380 - Exp. 03/31/16 - STATE OF CALIFORNIA

PROJECT SPECIFIC STATE AGENCY APPROVAL

IDENTIFICATION STAMP DIV. OF THE STATE ARCHITECT 02 II 6495 AC TM DATE 2-28-2017

ORIGINAL PC STATE AGENCY APPROVAL

BASED ON PC# 02-113921

PRE-CHECK (PC) DOCUMENT - CODE: 2013 CBC
A SEPARATE PROJECT APPLICATION FOR CONSTRUCTION IS REQUIRED

REVISIONS

1	
2	
3	
4	

DRAWN BY:	BA
SCALE:	AS NOTED
DATE:	11/10/17

SHEET NUMBER

E1.0A

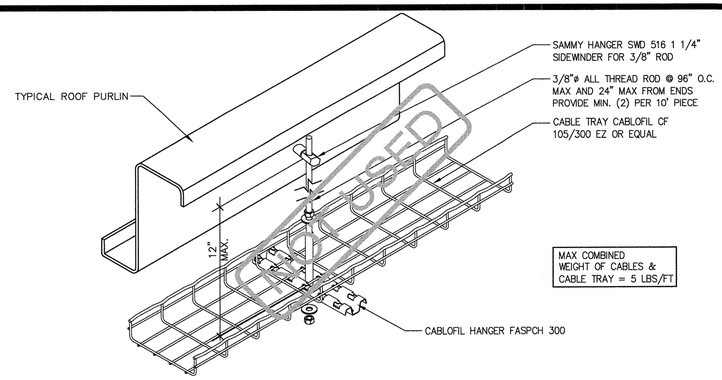

CABLE TRAY DETAIL

SCALE: N.T.S. | 1

NOT USED | 2

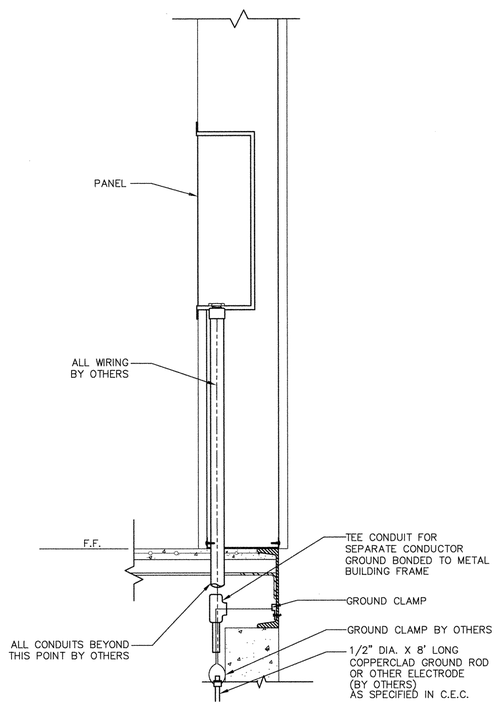

ELECTRICAL PANEL CONNECTION DETAIL - UNDERFLOOR OPTION

SCALE: 1-1/2" = 1'-0" | 3

1. SIZE OF CONDUCTORS SHALL COMPLY W/CEC.A
2. BOND SEPARATE CONDUCTORS FROM GROUND ROD TO ELECTRICAL PANEL & METAL BUILDING FRAME (CEC). IN ADDITION TO THE DETAIL SHOWN ABOVE, BOND THE ELECTRICAL GROUND TO METAL WATER PIPE EMBEDDED AT LEAST 10' INTO THE SOIL IF AVAILABLE (CEC).
3. ELECTRICAL BOND MODULES TOGETHER W/#8 CU @ MODLINE. BY MANUFACTURER. CHECK RESISTANCE TO GROUND. IF RESISTANCE EXCEEDS 25 OHMS, INSTALL ADDITIONAL GROUND RODS (CEC) AS REQUIRED. GROUNDING DETAIL PER DSA IR E-1. INSPECTOR TO WITNESS GROUNDING TEST.

NOTE:
FIRE ALARM DEDICATED CIRCUIT SHALL BE IDENTIFIED WITH A RED MARKED DISCONNECT WITH LOCK-ON CAPABILITY (NFPA 72 10.6.5.2)

LOAD PANEL CALCULATIONS

FIRE ALARM SYSTEM

1. THE FIRE ALARM SYSTEM SHALL CONFORM TO THE CALIFORNIA ELECTRICAL CODE, CALIFORNIA FIRE CODE AND THE CALIFORNIA BUILDING CODE.
2. INSTALLATION OF THE FIRE ALARM SYSTEM SHALL NOT BE STARTED UNTIL DETAILED PLANS AND SPECIFICATIONS, INCLUDING CALIFORNIA STATE FIRE MARSHAL LISTINGS FOR EACH COMPONENT OF THE SYSTEM, HAVE BEEN APPROVED BY DSA.
3. UPON COMPLETION OF THE INSTALLATION OF THE FIRE ALARM SYSTEM, A SATISFACTORY TEST OF THE ENTIRE SYSTEM SHALL BE MADE IN THE PRESENCE OF THE ENFORCING AGENCY.
4. JUNCTION BOXES – GALVANIZED SHEET METAL, SQUARE OR RECTANGULAR WITH BLANK COVERS. LOCATE ONE BOX AT REAR OF BUILDING NEAR MAIN ELECTRICAL PANEL @ +18" ABOVE FINISH FLOOR FOR FUTURE CONNECTION.
5. COVERS – INSTALL GASKETED, METAL, WATERPROOF, FINISH COVERS AT EXTERIOR LOCATIONS. INSTALL FINISH COVERS AT INTERIOR LOCATIONS.
6. THE AUTOMATIC ALARM SYSTEM SHALL BE INSTALLED, TESTED, AND MAINTAINED IN ACCORDANCE WITH THE STATE FIRE MARSHALL'S REGULATIONS (CBC SEC. 907.2.3) AND THE 2013 EDITION OF NFPA 72.
7. THE LOCATION OF AUTOMATIC DETECTORS, MANUAL STATIONS AND OTHER FIRE ALARM EQUIPMENT AND DEVICES, AS SHOWN ON PLAN, ARE FOR REFERENCE ONLY AND DO NOT CONSTITUTE SHOP DRAWINGS WHICH ARE REQUIRED FOR REVIEW AND APPROVAL.
8. ALARM-INDICATING DEVICES OF A FIRE ALARM SYSTEM INTENDED TO ALERT ALL OCCUPANTS SHALL CAUSE A LEVEL OF AUDIBILITY OF NOT LESS THAN 15 dBA ABOVE THE AVERAGE AMBIENT NOISE LEVELS OR 5dBA ABOVE THE MAXIMUM SOUND LEVEL HAVING A DURATION OF 60 SECONDS, WHICHEVER IS GREATER, MEASURED 5' ABOVE THE FLOOR. AMBIENT NOISE LEVELS MEANS THE LEVEL WHICH CAN NORMALLY BE EXPECTED WHEN THE FACILITY, BUILDING, ROOM, OR AREA IS FUNCTIONING UNDER NORMAL OPERATING OR WORKING CONDITIONS (NFPA 72, SEC. 18.4.1).
9. THE ALARM SYSTEM SHALL ACTIVATE A MEANS OF WARNING THE HEARING IMPAIRED. FLASHING VISUAL WARNINGS SHALL HAVE A FLASH RATE NOT EXCEEDING TWO FLASHES PER SECOND (2 HZ), NOR BE LESS THAN ONE FLASH EVERY SECOND (1 HZ). STROBE SIGNALING DEVICES FOR THE HEARING IMPAIRED SHALL BE STATE FIRE MARSHALL APPROVED AND LISTED (NFPA 72, SEC. 18.5.3).
10. AUTOMATIC FIRE ALARM SYSTEM SHALL TRANSMIT THE ALARM, SUPERVISORY AND TROUBLE SIGNALS TO AN APPROVED SUPERVISING STATION AS REQUIRED BY NFPA 72 CHAPTER 26, AS AMENDED BY ARTICLE 91. THE SUPERVISING STATION SHALL BE LISTED AS EITHER UUFX OR UUJS BY UNDERWRITERS LABORATORY OR SHALL MEET THE REQUIREMENTS OF FACTORY MUTUAL RESEARCH APPROVAL STANDARD 3011. SUPERVISION OF SYSTEM AND LEASED TELEPHONE LINES SHALL BE ARRANGED BY OWNER. IF TESTING RESULTS DETERMINE FIRE ALARM AUDIBILITY DOES NOT MEET 15db OVER AMBIENT NOISE LEVELS, ADDITIONAL FIRE ALARM SIGNALING DEVICES MAY BE REQUIRED BY THE ENFORCING AGENCY.

GENERAL NOTES

1. GROUNDING ELECTRODE CONDUCTOR SIZED PER CEC.
2. PROVIDE BONDS TO BLDG. STEEL & PANEL (#8 CU)
3. PANEL TO LISTED FOR USE AS SERVICE EQUIPMENT.

FIXTURE NOTES:

1. ALL FLUORESCENT LIGHT FIXTURES SHALL HAVE ENERGY SAVING LAMPS AND BALLASTS.
2. LUMINARIES/BALLASTS SHALL BE CERTIFIED PER CALIFORNIA BUILDING CODE, TITLE 24.
3. FLUORESCENT LIGHT FIXTURE TYPE "A" SHALL BE CONTROLLED TO PROVIDE TWO LEVELS OF LIGHTING. SWITCH (SA) SHALL CONTROL THE TWO OUTER LAMPS AND SWITCH (SB) SHALL CONTROL THE TWO INNER LAMPS.
4. ELECTRICAL SERVICE DROP AND CONNECTIONS SUPPLIED BY OTHERS.
5. MANUFACTURER TO PROVIDE STUB-OUT FROM BACK OF ELECTRICAL PANEL THROUGH THE EXTERIOR WALL OR TO BELOW FLOOR FOR RECEIVING EITHER UNDERGROUND OR OVERHEAD SERVICE & FITTING FOR GROUNDING CABLE.
6. ELECTRICAL PANEL BOARD SHALL BE RECESS MOUNTED INSIDE THE BUILDING, SIZED TO ACCOMMODATE ALL CONNECTED LOADS INCLUDING SPACES AS SHOWN. OVERCURRENT PROTECTIVE DEVICES IN THE PANEL BOARDS SHALL HAVE ADEQUATE SHORT CIRCUIT INTERRUPTING CAPACITY. ALL BUSES INCLUDING BUS SHALL BE COPPER OR ALUMINUM.
7. 2X4 FLUORESCENT FIXTURES SHALL HAVE A STEEL FRAME, LENS SHALL BE HINGED AND LOCKED IN PLACE BY TWO LOCKING DEVICES. THE LENS DIFFUSERS SHALL BE KHS, INC. #KSH-2, CAROLITE, INC. #C-12 OR PLASKOLITE, INC. #PL21A. MINIMUM LENS THICKNESS SHALL BE 0.125 INCHES.
8. FLUORESCENT BALLAST SHALL BE ENERGY SAVER WHILE MAINTAINING FULL LIGHT OUTPUT, CLASS "P" EQUIPPED WITH THERMAL PROTECTORS, GUARANTEED AGAINST FAILURE FOR (2) YEARS AND BE REPLACEABLE FROM INSIDE THE FIXTURE.
9. CLOCK – 12" DIAL CLOCK ON CLOCK OUTLET.
   A. CLOCK SHALL BE GENERAL ELECTRIC MODEL 2912 129V 60 CYCLE
   B. CLOCK OUTLET SHALL BE BRYANT #2828 OR EQUAL WITH SEPARABLE HANGING CLIP & APP'D RECEPT. THE H.V.A.C. UNIT FEEDER CIRCUIT – PANEL CIRCUIT BREAKER, FEEDER WIRE, UNIT DISCONNECT AND FUSES (WHERE USED) – IS TO BE COORDINATED WITH THE NAME PLATE DATA AT THE TIME OF MANUFACTURE. H.V.A.C. UNITS HAVING KVA RATINGS LARGER THAN THAT INDICATED ON THIS PANEL SCHEDULE WILL NOT BE ALLOWED TO BE INSTALLED ON THIS BUILDING.
   C. IF 60 DEGREES WIRE IS TO BE USED IN THIS INSTALLATION, CALCULATIONS DEMONSTRATING AMPACITY SHALL BE PROVIDED ON THE DRAWING.

GENERAL NOTES

American Modular Systems
787 Spreckels Ave. Manteca, CA 95336
Phone (209) 825-1921 - Fax (209) 825-7018
americanmodular.com

MODULAR MANUFACTURER PROPRIETARY STATEMENT
THESE DRAWINGS AND THE MATERIAL CONTAINED THEREIN ARE THE PROPERTY OF AMERICAN MODULAR SYSTEMS, INC. (AMS) AND SHALL NOT BE REPRODUCED, COPIED OR OTHERWISE DISPOSED OF DIRECTLY OR INDIRECTLY AND SHALL NOT BE USED IN WHOLE OR IN PART TO ASSIST IN THE MAKING OF OR FOR THE PURPOSE OF FURNISHING ANY INFORMATION FOR THE MAKING OF DRAWINGS, PRINTS, APPARATUS OR PARTS THEREOF WITHOUT THE FULL KNOWLEDGE AND WRITTEN CONSENT OF AMS. ALL PATENTABLE MATERIAL CONTAINED HEREIN AND ORIGINATING WITH AMS SHALL BE THE SOLE PROPERTY OF AMS.

PRE-CHECKED SET NAME

30' x 32' THRU 150' x 32' BUILDINGS

SITE SPECIFIC PROJECT NAME

MARIN COMMUNITY CSD - INDIAN VALLEY CAMPUS 60x32 BUILDING

SHEET TITLE

ELECTRICAL NOTES & DETAILS

MANUFACTURER PROFESSIONAL OF RECORD ON PC

LICENSED ARCHITECT ROBERT PATRICK CUNNINGHAM No. C12631 Ren. 3-31-19 STATE OF CALIFORNIA

PROJECT SPECIFIC STATE AGENCY APPROVAL

IDENTIFICATION STAMP DIV. OF THE STATE ARCHITECT 02 116495 AC TM DATE 12-12-2017

ORIGINAL PC STATE AGENCY APPROVAL

BASED ON PC# 02-113921
PRE-CHECK (PC) DOCUMENT – CODE: 2013 CBC
A SEPARATE PROJECT APPLICATION FOR CONSTRUCTION IS REQUIRED

REVISIONS
1
2
3
4

DRAWN BY:	BA
SCALE:	AS NOTED
DATE:	11/10/17

SHEET NUMBER

E1.2

02-113913 - 14 x 40' - 150 MPH EXPOSED STEEL SAVED: 11/9/2017 8:26 AM PLOTTED: 11/9/2017 8:30 AM

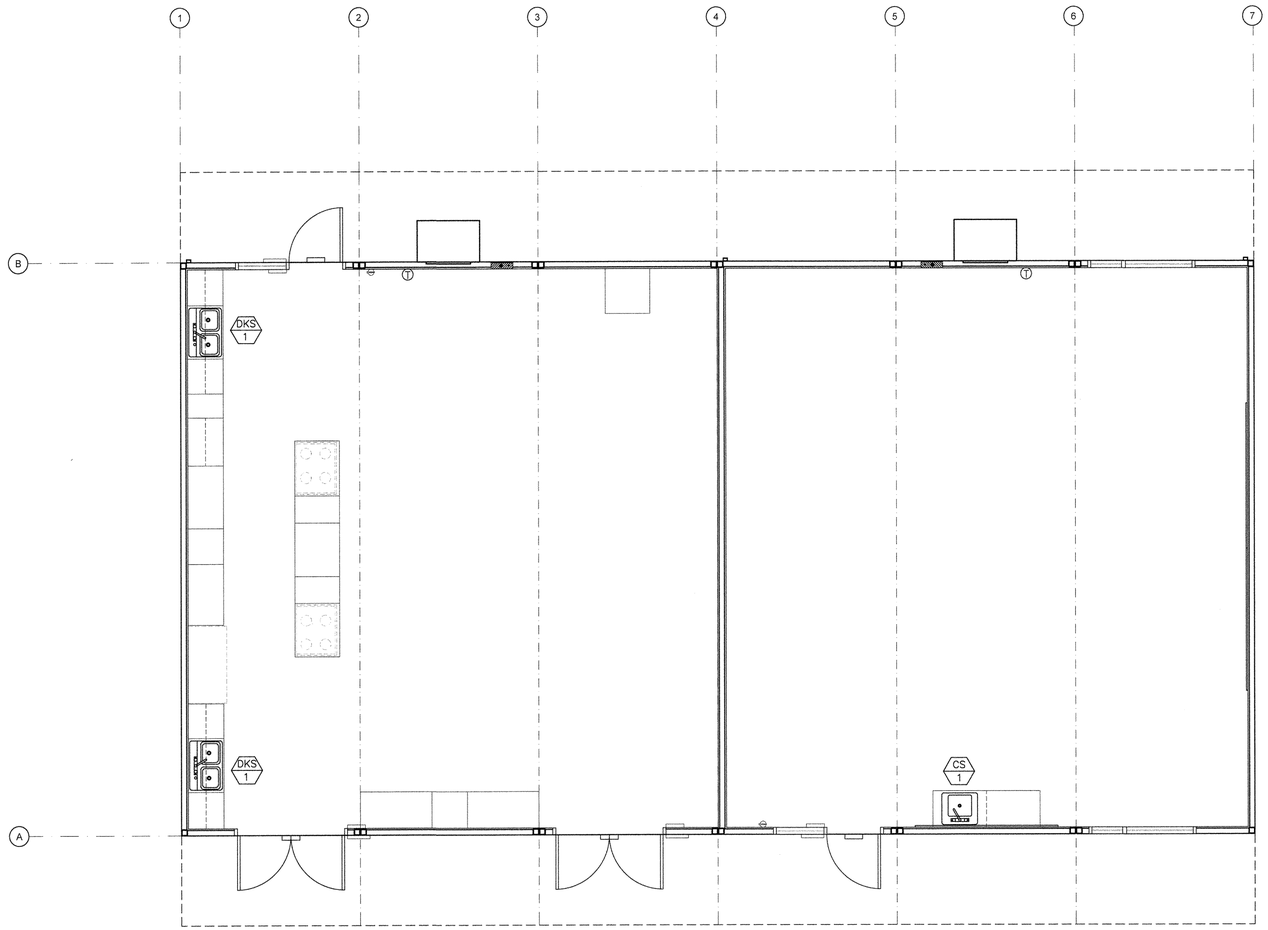

PLUMBING PLAN

SCALE: 1/4" = 1'-0" | 1

NOT USED

MARK	FIXTURE*	TYPE	REMARKS
DKS 1	DOUBLE KITCHEN SINK	JUST MODEL DL-ADA2233-A-GR-3-5.0	———
HB 1	HOSE BIBB	STANDARD HOSE BIBB ARROWHEAD MODEL 353LKLF OR EQUAL	LOCATE AS SPECIFIED ON FLOOR PLANS.
HB 2	HOSE BIBB	RECESSED HOSE BIBB WOODFORD MODEL B75CH ¾" WALL HYDRANT OR EQUAL	LOCATE AS SPECIFIED ON FLOOR PLANS.
CS 1	CLASSROOM SINK	TEKA SINGLE BOWL SINK MODEL America #25.22 OR EQUAL	LOCATE AS SPECIFIED ON FLOOR PLANS. MOUNT ACCESSIBLE FIXTURES PER SCHEDULE 7/P2.0

*ALL WATER FIXTURES MUST MEET REQUIREMENTS OF CAL-GREEN TITLE 24, PART 11, SECTION 5.303.3 "WATER CONSERVING PLUMBING FIXTURES & SETTINGS".

PLUMBING FIXTURE SCHEDULE

American Modular Systems
787 Spreckels Ave. Manteca, CA 95336
Phone (209) 825-1921 - Fax (209) 825-7018
americanmodular.com

MODULAR MANUFACTURER PROPRIETARY STATEMENT

THESE DRAWINGS AND THE MATERIAL CONTAINED THEREIN ARE THE PROPERTY OF AMERICAN MODULAR SYSTEMS, INC. (AMS) AND SHALL NOT BE REPRODUCED, COPIED OR OTHERWISE DISPOSED OF DIRECTLY OR INDIRECTLY AND SHALL NOT BE USED IN WHOLE OR IN PART TO ASSIST IN THE MAKING OF OR FOR THE PURPOSE OF FURNISHING ANY INFORMATION FOR THE MAKING OF DRAWINGS, PRINTS, APPARATUS OR PARTS THEREOF WITHOUT THE FULL KNOWLEDGE AND WRITTEN CONSENT OF AMS. ALL PATENTABLE MATERIAL CONTAINED HEREIN AND ORIGINATING WITH AMS SHALL BE THE SOLE PROPERTY OF AMS.

PRE-CHECKED SET NAME

30' x 32' THRU 150' x 32' BUILDINGS

SITE SPECIFIC PROJECT NAME

MARIN COMMUNITY CSD - INDIAN VALLEY CAMPUS 60x32 BUILDING

SHEET TITLE

PLUMBING PLANS & FIXTURE SCHEDULE 'A'

MANUFACTURER PROFESSIONAL OF RECORD ON PC

LICENSED ARCHITECT ANTHONY PATRICK [illegible] No. C12631 Ren. 3-31-19 STATE OF CALIFORNIA

PROJECT SPECIFIC STATE AGENCY APPROVAL

IDENTIFICATION STAMP DIV. OF THE STATE ARCHITECT
02 11 6495
AC TM FC [illegible] SS 103
DATE 12-18-2017

ORIGINAL PC STATE AGENCY APPROVAL

BASED ON PC# 02-113921
PRE-CHECK (PC) DOCUMENT - CODE: 2013 CBC
A SEPARATE PROJECT APPLICATION FOR CONSTRUCTION IS REQUIRED

REVISIONS

DRAWN BY:	BA
SCALE:	AS NOTED
DATE:	11/10/17

SHEET NUMBER

P1.0

G:\...\P1.0 - 24 x 36 - 100 % 48" DWG(D) 1035 - SHEET: 11/9/2017 9:57 AM - PLOTTED: 12/7/2017 11:46 AM

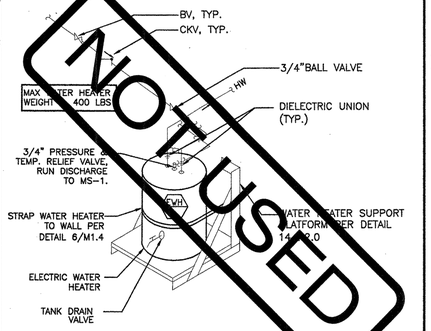

NOT USED

WATER HEATER SUPPORT DETAIL SCALE : 3"=1'-0" | 1

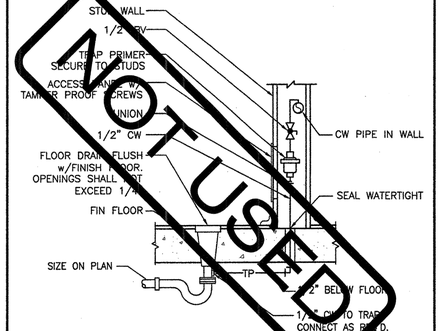

NOT USED

TRAP PRIMER DETAIL SCALE : 3"=1'-0" | 2

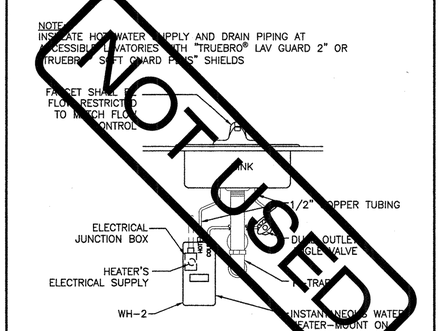

NOT USED

INSTANT WATER HEATER DETAIL SCALE : 3"=1'-0" | 3

HEIGHTS FOR ACCESSIBLE FEATURES IN TOILET FACILITIES

	FIXTURE & MEASUREMENT POINT	AGES 3-4	AGES 5-8	AGES 9-12	AGES 13 -ADULT	NOTES
A	TOILET, CENTERLINE FROM FACE OF WALL	12" SUGGESTED	12" TO 15" SUGGESTED	15" TO 18" SUGGESTED	17" MIN. TO 18" MAX.	
B	TOILET, TOP OF SEAT HEIGHT	11" TO 12" SUGGESTED	12" TO 15" SUGGESTED	15" TO 17" SUGGESTED	17" MIN. TO 19" MAX.	
C	TOILET, TOP OF FLUSH CONTROLS	36" MAX.	36" MAX.	36" MAX.	44" MAX.	FLUSH CONTROLS SHALL BE LOCATED ON OPEN SIDE OF TOILET.
D	GRAB BAR, TOP OF BAR	18" TO 20" SUGGESTED	20" TO 25" SUGGESTED	25" TO 27" SUGGESTED	33" MIN. TO 36" MAX.	
E	TOILET PAPER DISPENSER, HEIGHT TO OUTLET	14" SUGGESTED	15" TO 17" SUGGESTED	17" TO 19" SUGGESTED	19" MIN.	CENTERLINE OF DISPENSER OUTLET SHALL BE BETWEEN 7" TO 9" IN FRONT OF THE TOILET. OUTLET OF DISPENSER MUST BE BELOW GRAB BAR. DISPENSER (INCLUDING FULL TOILET PAPER ROLL) MUST NOT ENCROACH INTO REQ'D GRAB BAR CLEARANCE.
F	TOILET SEAT COVER, HEIGHT TO TOP OF OUTLET	24" TO 32" SUGGESTED	30" TO 32" SUGGESTED	32" TO 36" SUGGESTED	40" MAX.	
G	URINAL, LIP HEIGHT	12" TO 13" SUGGESTED	13" TO 15" SUGGESTED	15" TO 17" SUGGESTED	17" MAX.	
H	URINAL, HEIGHT OF FLUSH HANDLE	36" MAX.	36" MAX.	36" MAX.	44" MAX.	
I	LAVATORY, HEIGHT TO HIGHEST POINT AT FRONT OF LAV. OR COUNTER	24" TO 28" SUGGESTED	31" MAX.	31" MAX.	34" MAX.	
J	LAVATORY, VERTICAL KNEE CLEARANCE		24" MIN.	27" MIN.	29"-23" OVER THE 8" DEPTH SHOWN	
K	MIRROR (ABOVE LAVATORY OR COUNTERTOP), LOWEST POINT OF REFLECTIVE SURFACE	24" TO 32" SUGGESTED	30" TO 32" SUGGESTED	32" TO 36" SUGGESTED	40" MAX.	MIRROR NOT LOCATED ABOVE LAVATORY OR COUNTERTOP SHALL BE MOUNTED SO THAT LOWEST EDGE OF REFLECTING SURFACE IS 35" MAX. ABOVE FINISH FLOOR.
L	DISPENSERS, DRYERS, HEIGHT TO TOP OF OUTLET, HANDLE OR OPERATING MECHANISM (WHICHEVER IS HIGHEST)	24" TO 32" SUGGESTED	30" TO 32" SUGGESTED	32" TO 36" SUGGESTED	40" MAX.	
M	LO DRINKING FOUNTAIN, HEIGHT TO BUBBLER	24" TO 30" SUGGESTED	30" TO 32" SUGGESTED	32" TO 36" SUGGESTED	36" MAX.	
N	HI DRINKING FOUNTAIN, HEIGHT TO BUBBLER	←	←	←	38" MIN. TO 43" MAX.	

NOTES:
1. THIS TABLE AND RELATED DIAGRAMS ILLUSTRATE THE SPECIFIC REQUIREMENTS OF CALIF. TITLE 24 (2013 C.B.C. SECTION 11B-601) AND IS SHOWN HERE ONLY AS AN AID FOR CONSTRUCTION AND INSTALLATION.
2. ACCESSORIES ARE NOT IN MANUFACTURER'S SCOPE OF WORK.
3. DIMENSIONS GIVEN ARE FROM FINISH FLOOR, UNLESS OTHERWISE NOTED.
4. NOT ALL ITEMS LISTED MAY OCCUR IN THE PROJECT.

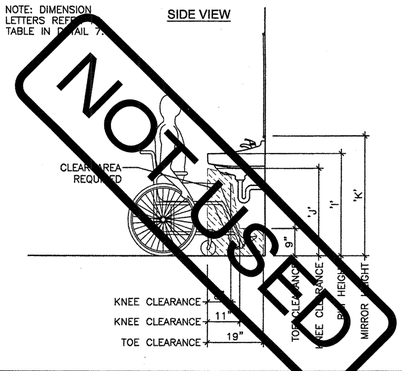

NOT USED

LAVATORY CLEARANCES SCALE: 1/2" = 1'-0" | 4

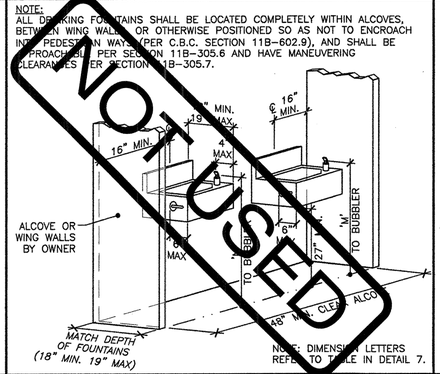

NOT USED

HI-LO DRINKING FOUNTAIN N.T.S. | 5

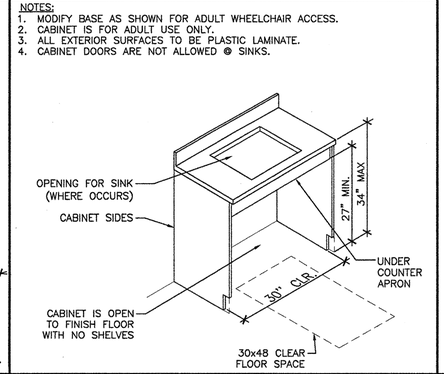

NOT USED

ACCESSIBLE CABINET ELEVATION N.T.S. | 6

ACCESSIBLE HEIGHTS N.T.S. | 7

NOT USED | 8

NOT USED | 9

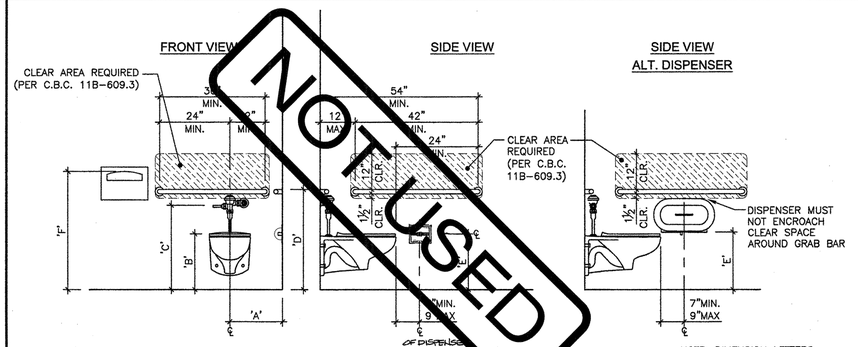

NOT USED

ACCESSIBLE TOILET AND ACCESSORIES SCALE: 1/2" = 1'-0" | 11

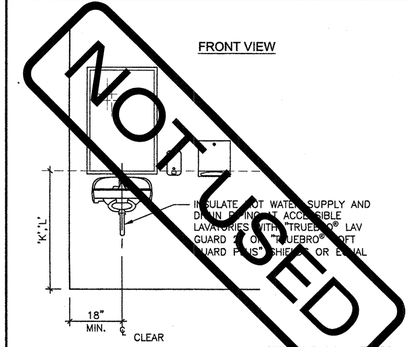

NOT USED

LAVATORY & ACCESSORIES SCALE: 1/2" = 1'-0" | 12

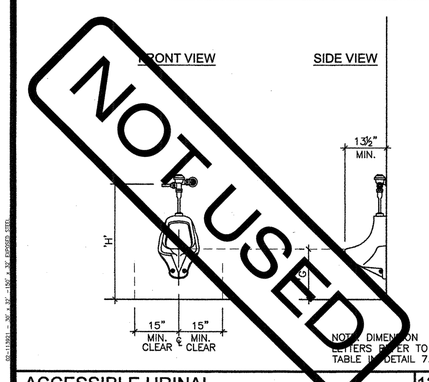

NOT USED

ACCESSIBLE URINAL SCALE: 1/2" = 1'-0" | 13

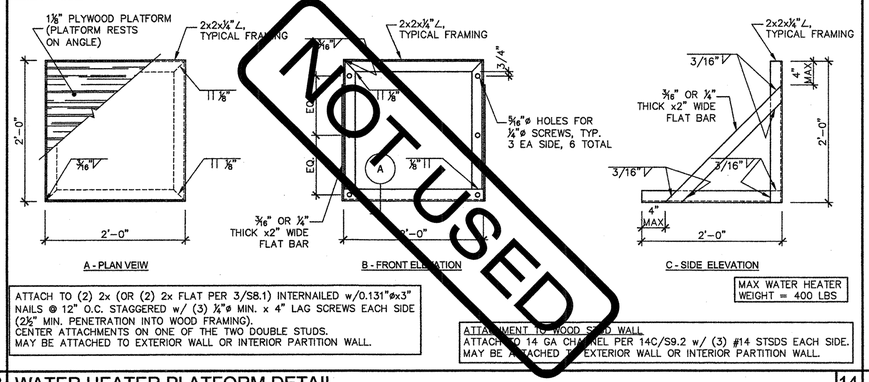

ATTACH TO (2) 2x (OR (2) 2x FLAT PER 3/S8.1) INTERNAILED w/0.131"ø x3" NAILS @ 12" O.C. STAGGERED w/ (3) ¼"ø MIN. x 4" LAG SCREWS EACH SIDE (2½" MIN. PENETRATION INTO WOOD FRAMING). CENTER ATTACHMENTS ON ONE OF THE TWO DOUBLE STUDS. MAY BE ATTACHED TO EXTERIOR WALL OR INTERIOR PARTITION WALL.

ATTACHMENT TO WOOD STUD WALL
ATTACH TO 14 GA CHANNEL PER 14C/S9.2 w/ (3) #14 STSDS EACH SIDE. MAY BE ATTACHED TO EXTERIOR WALL OR INTERIOR PARTITION WALL.

NOT USED

WATER HEATER PLATFORM DETAIL | 14

NOT USED | 14

GENERAL NOTES

1. DWV PIPING SHALL BE ABS PLASTIC
2. COLD WATER SUPPLY SHALL BE TYPE L COPPER
3. MIN SLOPE 1/4" PER FOOT MAY SLOPE 4" CI AT 1/8" PER FOOT VENTS SHALL TERMINATE NOT LESS THAN 10 FEET FROM OR AT LEAST 3 FT. ABOVE ANY WINDOW, DOOR, AIR INTAKE OR VENT SHAFT, NOR LESS THAN 3FT. IN EVERY DIRECTION FROM ANY LOT LINE; ALLEY AND STREET EXCEPTED; EXTEND 6" ABOVE THE ROOF

American Modular Systems
787 Spreckels Ave.Manteca, CA 95336
Phone (209) 825-1921 - Fax (209) 825-7018
americanmodular.com

MODULAR MANUFACTURER PROPRIETARY STATEMENT

THESE DRAWINGS AND THE MATERIAL CONTAINED THEREIN ARE THE PROPERTY OF AMERICAN MODULAR SYSTEMS, INC. (AMS) AND SHALL NOT BE REPRODUCED, COPIED OR OTHERWISE DISPOSED OF DIRECTLY OR INDIRECTLY AND SHALL NOT BE USED IN WHOLE OR IN PART TO ASSIST IN THE MAKING OF OR FOR THE PURPOSE OF FURNISHING ANY INFORMATION FOR THE MAKING OF DRAWINGS, PRINTS, APPARATUS OR PARTS THEREOF WITHOUT THE FULL KNOWLEDGE AND WRITTEN CONSENT OF AMS. ALL PATENTABLE MATERIAL CONTAINED HEREIN AND ORIGINATING WITH AMS SHALL BE THE SOLE PROPERTY OF AMS.

PRE-CHECKED SET NAME

30' x 32' THRU 150' x 32' BUILDINGS

SITE SPECIFIC PROJECT NAME

SHEET TITLE

PLUMBING DETAILS AND ACCESSIBLE DETAILS

MANUFACTURER PROFESSIONAL OF RECORD ON PC

LICENSED ARCHITECT DANIEL PATRICK CANNAGH No. C12631 Ren. 09-31-17 STATE OF CALIFORNIA

PROJECT SPECIFIC STATE AGENCY APPROVAL

IDENTIFICATION STAMP DIV. OF THE STATE ARCHITECT
02 116495
AC
DATE 12-18-2017

ORIGINAL PC STATE AGENCY APPROVAL

IDENTIFICATION STAMP DIV. OF THE STATE ARCHITECT CA. DEPT. OF GENERAL SERVICES
PC 02-113921
AC
DATE 6/19/2015

PRE-CHECK (PC) DOCUMENT - CODE: 2013 CBC
A SEPARATE PROJECT APPLICATION FOR CONSTRUCTION IS REQUIRED

REVISIONS

DRAWN BY:
SCALE: AS NOTED
DATE:

SHEET NUMBER

P2.0

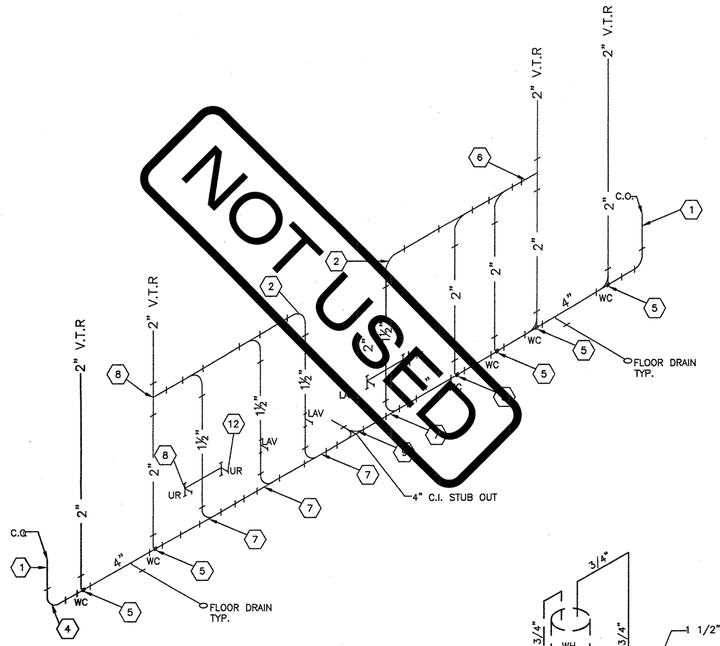

WASTE ISOMETRIC
BOYS & GIRLS SCALE: NTS

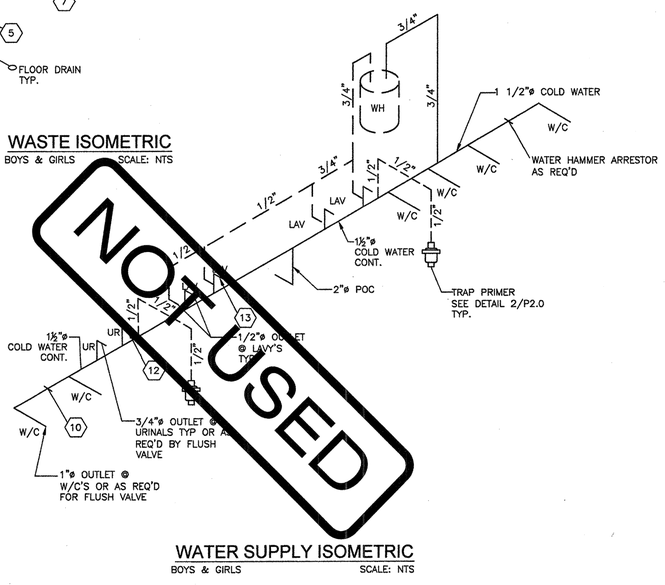

WATER SUPPLY ISOMETRIC
BOYS & GIRLS SCALE: NTS

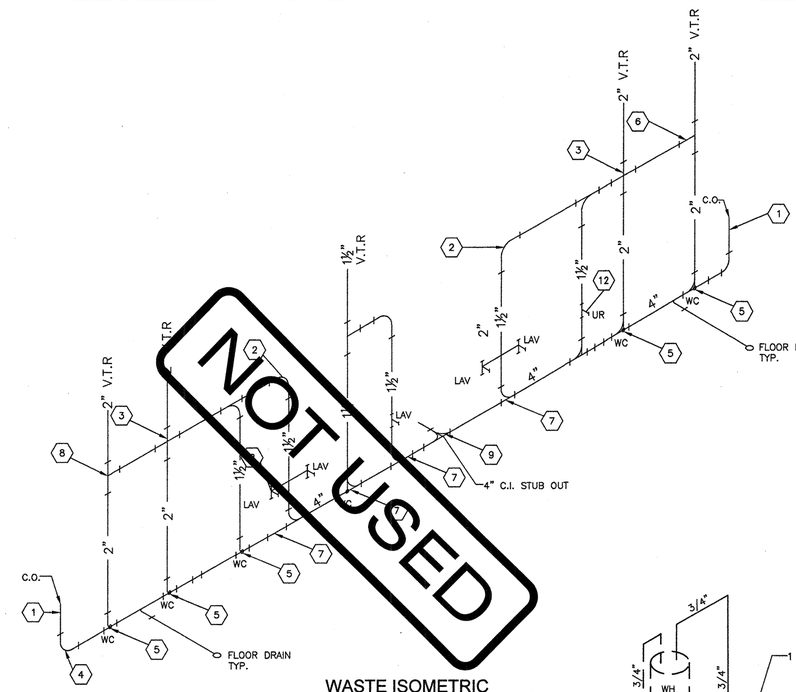

WASTE ISOMETRIC
BOYS, GIRLS & STAFF SCALE: NTS

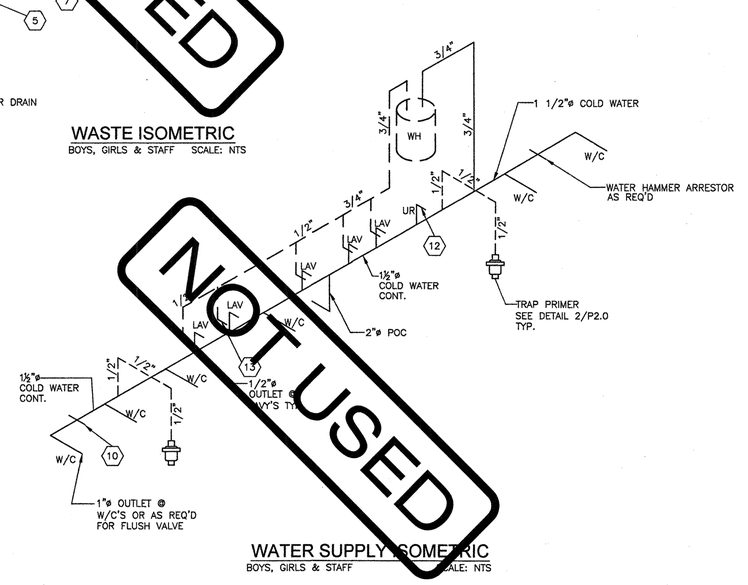

WATER SUPPLY ISOMETRIC
BOYS, GIRLS & STAFF SCALE: NTS

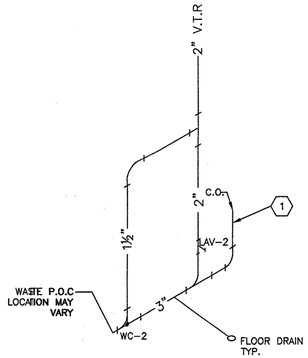

WASTE ISOMETRIC
SINGLE TOILET OPTION SCALE: NTS

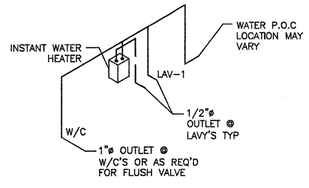

WATER SUPPLY ISOMETRIC
SINGLE TOILET OPTION SCALE: NTS

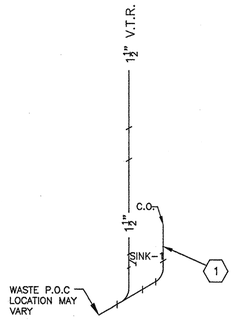

WASTE ISOMETRIC
CLASSROOM SINK OPTION SCALE: NTS

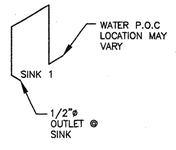

WATER SUPPLY ISOMETRIC
CLASSROOM SINK OPTION SCALE: NTS

KEY NOTES

1. 4" CLEAN OUT
2. VENT 90
3. VENT CROSS
4. 4" QUARTER BEND
5. SMITH#0600 CARRIER
6. 2" SANITARY TAP TEE
7. 4x4x2 COMBINATION WYE 1/8 BEND
8. 2x2x1 1/2 SANITARY TEE
9. 4" DOUBLE COMBINATION
10. WATER HAMMER ARRESTOR
11. 1" CW STUB AT WATER CLOSETS
12. 3/4" CW STUB AT URINALS
13. 1/2 CW STUB AT LAVATORIES

American Modular Systems
787 Spreckels Ave.Manteca, CA 95336
Phone (209) 825-1921 - Fax (209) 825-7018
americanmodular.com

MODULAR MANUFACTURER PROPRIETARY STATEMENT

THESE DRAWINGS AND THE MATERIAL CONTAINED THEREIN ARE THE PROPERTY OF AMERICAN MODULAR SYSTEMS, INC. (AMS) AND SHALL NOT BE REPRODUCED, COPIED OR OTHERWISE DISPOSED OF DIRECTLY OR INDIRECTLY AND SHALL NOT BE USED IN WHOLE OR IN PART TO ASSIST IN THE MAKING OF OR FOR THE PURPOSE OF FURNISHING ANY INFORMATION FOR THE MAKING OF DRAWINGS, PRINTS, APPARATUS OR PARTS THEREOF WITHOUT THE FULL KNOWLEDGE AND WRITTEN CONSENT OF AMS. ALL PATENTABLE MATERIAL CONTAINED HEREIN AND ORIGINATING WITH AMS SHALL BE THE SOLE PROPERTY OF AMS.

PRE-CHECKED SET NAME

30' x 32' THRU 150' x 32' BUILDINGS

SITE SPECIFIC PROJECT NAME

SHEET TITLE

PLUMBING ISOMETRICS

MANUFACTURER PROFESSIONAL OF RECORD ON PC

LICENSED ARCHITECT RANDALL PATRICK GRONAGH No. C12631 Ren. 03-31-17 STATE OF CALIFORNIA

PROJECT SPECIFIC STATE AGENCY APPROVAL

IDENTIFICATION STAMP DIV. OF THE STATE ARCHITECT
02 116495
AC TM
DATE 2-8-2017

ORIGINAL PC STATE AGENCY APPROVAL

IDENTIFICATION STAMP DIV. OF THE STATE ARCHITECT CA. DEPT. OF GENERAL SERVICES
PC 02-113921
AC
DATE 6/19/2015

PRE-CHECK (PC) DOCUMENT - CODE: 2013 CBC
A SEPARATE PROJECT APPLICATION FOR CONSTRUCTION IS REQUIRED

REVISIONS

DRAWN BY:	
SCALE:	AS NOTED
DATE:	

SHEET NUMBER

P3.0

American Modular Systems

MARIN COMMUNITY COLLEGE SCHOOL DISTRICT
INDIAN VALLEY CAMPUS
(1) 24x40 BUILDING

SERIAL NUMBER: 17-469-003 A-B

"ALL OF THE DRAWINGS AND DETAILS CONTAINED IN THIS PACKAGE ARE THE INTELLECTUAL PROPERTY OF AMS AND MAY NOT BE USED FOR CONSTRUCTION OR DESIGN BY ANOTHER ENTITY WITHOUT THE EXPRESS WRITTEN PERMISSION OF AMS."

EXPOSED - STEEL

AUTHORIZED USE: ALL INFORMATION INCLUDED IN ON THIS FORM DSA–103 SHEET IS FOR THE SOLE PURPOSE OF RECEIVING DSA APPROVAL AND ISSUANCE OF A PC #. NO OTHER USE IS AUTHORIZED WITHOUT THE EXPRESS WRITTEN CONSENT OF AMERICAN MODULAR SYSTEMS, INC.

TYPE OF MODULAR STEEL MOMENT FRAME BUILDING PROJECT
(X - INDICATES TEST OR INSPECTION TO BE DONE)
--- INDICATES NOT APPLICABLE)

TESTS or INSPECTIONS (as listed on DSA-103)

MATERIAL TYPE		DSA-103 Item #	DESCRIPTION	STOCKPILE A: Wood Floor Only	STOCKPILE B: Concrete Floors	CONSTRUCTION OF (diaphragm material-foundation material) C: OSB Floor Only - Wood Foundation	D: OSB Floor - Concrete Foundation	E: Concrete Floor - Concrete Foundation	RELOCATION OF CERTIFIED BUILDING F: Wood Foundation	G: Concrete Foundation
SOILS Verify the necessity of the Test and/or Inspections with the requirements of the Application that this PC is part of.	GENERAL	1	Site has been prepared properly prior to fill placement/excavations; Fdn excavations extended to proper depth and material; Materials below footing are adequate	---	---	---	X	X	---	X
	COMPACTED FILL	2a	Perform Qualification Testing of Fill Materials	---	---	---	X	X	---	X
		2b	Verify use of proper fill materials, inspect lift thickness, placement and compactation during placement of controlled fill	---	---	---	X	X	---	X
		2c	Test Compactation of controlled fill	---	---	---	X	X	---	X
CONCRETE	LIGHT WEIGHT FILL OVER METAL DECK	7a	Verify use of required design mix	---	X	---	---	X	---	---
		7c	Perform Slump and (where required) Air Content Test; determine Temperature of Concrete	---	X	---	---	X	---	---
		7d	Test concrete -Compression Tests	---	X	---	---	X	---	---
		7e	Inspect batching of concrete - See next cell below if waived (per Note 1)	---	X	---	---	X	---	---
		12	Waiver of Batch Plant Inspection See Note 1 for conditions and requirements	---	X	---	---	X	---	---
		7f	Inspect placement of concrete, reinforcing and embedded items over Steel Deck - by RBIP	---	X	---	---	X	---	---
	FOUNDATION	7a	Verify use of required design mix	---	---	---	X	X	---	X
		7b	Test Reinforcing Steel - See Note 2 for Waiver , One Story Bldgs.	---	---	---	X	X	---	X
		7c	Perform Slump and (where required) Air Content Test; determine Temperature of Concrete	---	---	---	X	X	---	X
		7d	Test concrete -Compression Tests	---	---	---	X	X	---	X
		7e	Inspect batching of concrete - See next cell below if waived (per Note 1)	---	---	---	X	X	---	X
		12 Note 1	Waiver of Batch Plant Inspection -To be performed by batch plant special inspector and project inspector. See Note 1 for conditions and requirements	---	---	---	X	X	---	X
		7f	Inspect placement of formwork, concrete, reinforcing steel and embedded items - by Project Inspector	---	---	---	X	X	---	X
	POST INSTALLED ANCHORS Note 3	11a	Inspect installation of post-installed anchors	---	---	---	X	X	---	X
		11b	Test post-installed anchors.	---	---	---	X	X	---	X
STRUCTURAL STEEL	MATERIAL VERIFICATION	17a	*Material are appropriately marked *Mfr. Certified Mill Test Reports *Material Sizes, Types and Grades comply with requirements	X	X	X	X	X	---	---
		17b	Sample and Test all Unidentified Structural Steel and Steel Deck	X	X	X	X	X	---	---
		17c	Examine seam welds of structural tubes and pipes	X	X	X	X	X	---	---
		17d	Verify member locations, bracing and all details constructed in the field	X	X	X	X	X	---	---
		17e	Verify stiffener locations, connection tab locations and all construction details fabricated in the shop.	X	X	X	X	X	---	---
	VERIFICATION OF MATERIALS, EQUIPMENT, WELDERS, ETC	19a	Verify weld filler material identification marking per AWS designation listed on the DSA approved documents and the WPS	X	X	X	X	X	---	---
		19b	Verify weld filler material manufacturer's certificate of compliance	X	X	X	X	X	---	---
		19c	Verify WPS, welder qualifications and equipment	X	X	X	X	X	---	---
	SHOP WELDING	19.1a	Inspect groove, multi-pass, and fillet welds > 5/16"	X	X	X	X	X	---	---
		19.1b	Inspect single-pass fillet welds = 5/16"	X	X	X	X	X	---	---
		19.1c	Inspect welding of stairs and railing systems. Note 4	X	X	X	X	X	---	---
	FIELD WELDING See Note 4	19.2a	Inspect groove, multi-pass, and fillet welds > 5/16"	---	---	X	X	X	---	X
		19.2b	Inspect single-pass fillet welds = 5/16"	---	---	X	X	X	---	X
		19.2f	Inspect welding of stairs and railing systems.	---	---	X	X	X	---	X
	SPRAY APPLIED FIRE-PROOFING	22a	Examine structural steel surface conditions, inspect application, take samples, measure thickness, and verify compliance of all aspects of application with DSA approved documents.	---	---	X	X	X	---	---
	OTHER	23a	Shop Welding - Inspect welding of cold-formed steel Periodic/Special Inspector	X	X	X	X	X	---	---
		23b	Shop Welding - Inspect welding of steel floor deck welds Periodic/Special Inspector	---	X	---	---	X	---	---
OTHER - GROUNDING Note 5		26b	Electrical grounding Test/Project	---	---	X	X	X	X	X
OTHER - SHOT PINS (Two Story Modular) Note 5		26c	Ceiling wire hangers (pins in metal deck with concrete fill) Test/Lab	---	X	---	---	X	---	---

Additional Information for PC designs only, not to be added to DSA-103

INSPECTOR CLASS (minimum requirements)	RBIP or Class 1	In Plant: RBIP or Class 1 Site: Class 4 for Single Story Site: Class 2 for Two-Story	Class 4 for Single Story Class 2 for Two-Story
SELECTION OF THE PROJECT INSPECTOR AND TESTING AGENCY	By the Owner and approved by DSA, A/E of Record and Structural Engineer	By the School District and approved by DSA, A/E of Record and Structural Engineer	
COST OF THE PROJECT INSPECTOR (Title 24, Part 1, Section 4-333(b) AND TESTING AGENCY (Title 24, Part 1, Section 4-335)	By the Owner	By the School District	

NOTES: NOTES APPLY ONLY WHEN TESTS OR INSPECTIONS APPLY TO YOUR PC SUBMITTAL.

Note 1: Waiver of Batch Plant Inspection (per CBC 1705A3.2 & 1705A3.3):
Verify that Either Condition a or b are noted in the specifications:
a) Concrete Plant complies fully with ASTM C94, Section 8 and 9, and has a current certification indicating the plant has automatic batching and recording capabilities from the National Ready Mixed Concrete Association
b) For One-story buildings, Compressive strength: 3500 psi Specified - 3000 psi Design
c) Certified technician of the test laboratory check first batching at start of work and furnish mix proportions to licensed weighmaster
d) Licensed Weighmaster to positively identify materials as to quantity and certify each load by a ticket
e) Tickets transmitted to Inspector of Record

Note 2: Test may be waived if mill certificate is provided.
Note 3: Required only where the details of the PC specify the use of this type of anchor
Note 4: Required only where the details of the PC specify this Welding
Note 5: This test needs to be written in on the DSA-103 form

02-113876 - 24' x 40' - 120' x 40' EXPOSED STEEL SAVED: 12/7/2017 11:53 AM PLOTTED: 12/7/2017 11:54 AM

BUILDING DATA

OCCUPANCY	B (CLASSROOM USE FOR COLLEGE)
TYPE OF CONSTRUCTION	VB
WIND LOAD ALTERNATE METHOD PER CBC 1609A.6.2	V = 110 MPH ULT. WIND SPEED EXPOSURE = C K_{ZT} = 1.00
FLOOR LIVE LOAD	~~50 LBS/SQ. FT.,~~ 50 LBS.+ 15 LBS./SQ. FT.~~, 100 LBS/SQ. FT. & 150 LBS./SQ. FT.~~
ROOF LIVE LOAD	20 LBS/SQ FT (REDUCIBLE)
FIRE SPRINKLER SYSTEM WEIGHT (PSF)	1.5
ALLOWABLE SOIL PRESSURE (PSF)	1,500 FOR CONCRETE ~~/ 1,000 FOR WOOD~~
FLOOD HAZARD AREA	NO
BUILDING AREA	960 SQ FT
CLIMATE ZONES	1–16
MODULES	MOMENT–RESISTANT FRAME (SINGLE STORY)
SYSTEM	12' x 40' MODULES
FOUNDATION TYPE	CONCRETE ~~/ WOOD~~

SEISMIC

Seismic design category = D ($S_1 \leq 0.75$)
E (S_1 =0.75<1.5)

$I = 1.0$ T=0.231 s R=3.5 (OMF)
$\Omega_0 = 3.0$ $C_d = 3.0$
SITE CLASS D $F_V = 1.5$

☒ LOW SEISMIC $F_a = 1.0$ $S_{DS} = 1.13$
S_S = 2.125 MAX (SITE) = 1.700 (DESIGN)* $C_S = 0.324$ W (DESIGN)*

* PER CBC 1616A.1.12 (MODIFICATION TO ASCE 7–10, 12.8.1.3), FOR REGULAR STRUCTURES (5) STORIES OR LESS WITH PERIOD OF 0.5s OR LESS, C_S IS CALCULATED USING A S_S DESIGN VALUE EQUAL TO THE GREATER OF 1.5 OR 80% OF THE ACTUAL S_S VALUE

☐ HIGH SEISMIC $F_a = 1.0$ $S_{DS} = 1.52$
S_S = 2.850 MAX (SITE) = 2.280 (DESIGN)* $C_S = 0.434$ W (DESIGN)*

☐ SITE SPECIFIC S_S = ____

APPLICABLE CODES

PARTIAL LIST OF APPLICABLE CODES AS OF JANUARY 1, 2014

*2013 CALIFORNIA ADMINISTRATIVE CODE (CAC) – (PART 1, TITLE 24, CCR)

2013 CALIFORNIA BUILDING CODE (CBC), VOLUMES 1 AND 2 – (PART 2, TITLE 24 CCR) BASED ON THE 2012 INTERNATIONAL BUILDING CODE

2013 CALIFORNIA ELECTRICAL CODE (CEC) – (PART 3, TITLE 24, CCR) BASED ON THE 2011 NATIONAL ELECTRIC CODE

2013 CALIFORNIA MECHANICAL CODE (CMC) – (PART 4, TITLE 24, CCR) BASED ON THE 2012 UNIFORM MECHANICAL CODE

2013 CALIFORNIA PLUMBING CODE (CPC) – (PART 5, TITLE 24, CCR) BASED ON THE 2012 UNIFORM PLUMBING CODE

*2013 CALIFORNIA ENERGY CODE (CEC) – (PART 6, TITLE 24, CCR)

2013 CALIFORNIA FIRE CODE (CFC) – (PART 9, TITLE 24, CCR) BASED ON THE 2012 INTERNATIONAL FIRE CODE

*2013 CALIFORNIA GREEN CODE (CGC) – (PART 11, TITLE 24, CCR)

2013 CALIFORNIA REFERENCED STANDARDS CODE – (PART 12, TITLE 24, CCR)

2013 CALIFORNIA ELEVATOR SAFETY CONSTRUCTION CODE PART 7, TITLE 24, C.C.R

* EFFECTIVE JULY 1, 2014

PARTIAL LIST OF APPLICABLE STANDARDS

NFPA 13	Automatic Sprinkler Systems	2013 Edition
NFPA 14	Standpipe Systems	2013 Edition
NFPA 17	Dry Chemical Extinguishing Systems	2013 Edition
NFPA 17a	Wet Chemical Systems	2013 Edition
NFPA 20	Stationary Pumps	2013 Edition
NFPA 24	Private Fire Mains	2013 Edition
NFPA 72	National Fire Alarm Code (California Amended)	2013 Edition
(Note See UL, Standard 1971 for "Visual Devices")		
NFPA 253	Critical Radiant Flux of Floor Covering Systems	2006 Edition
NFPA 2001	Clean Agent Fire Extinguishing Systems	2012 Edition
ASME 17.1	Elevator Standard	2007 Edition

GENERAL NOTES

1. PC BUILDING CLASSIFED AS OCCUPANCY "A" WITH OCCUPANT LOAD 100 OR MORE CAN NOT BE REVIEWED OVER THE COUNTER (OTC).
2. PC BUILDING APPROVED ONLY FOR OCCUPANCY E OR B, OR A CATEGORY I & II WITH OCCUPANT LOAD LESS THAN 250.
3. PC BUILDING EXITING IS BASED ON THE USE OR OCCUPANCY AND WILL BE REVIEWED AS SITE SPECIFIC.
4. THIS INCLUDE 2013 CBC REQUIREMENTS FOR "WILDLAND URBAN INTERFACE" AREAS.
5. SITE USE SPECIFIC REQUIREMENT FOR AUTOMATIC SPRINKLER SYSTEM MIGHT BE REQUIRED. AUTOMATIC FIRE SPRINKLER REQUIREMENTS ARE NOT INCLUDED IN THIS PC APPROVAL.
6. FIRE SERVICE UNDERGROUND SHALL BE REVIEWED AS A SITE SPECIFIC APPLICATION.WATER SUPPLY SHALL BE DESIGNED TO MEET THE PC SPRINKLER DEMAND REQUIREMENTS.
7. PROVIDE A SITE SPECIFIC FIRE FLOW LETTER OF CERTIFICATION FROM AN APPROVED WATER PURVEYOR OR LOCAL FIRE AUTHORITY.
8. THIS PC PLAN SHALL NOT BE USED TO HOUSE "ROOMS OR AREAS WITH SPECIAL HAZARDS" SUCH AS LABORATORIES, VOCATIONAL SHOPS AND OTHER SUCH AREAS NOT CLASSIFIED AS GROUP H, LOCATED IN GROUP E OCCUPANCIES
9. A SEPARATE DSA APPLICATION NUMBER IS REQUIRED FOR DESIGN & INSTALLATION OF THE SOLAR PANEL SYSTEM, ITS ANCHORAGE & ROOF SUPPORT STRUCTURE.

SHEET INDEX

ARCHITECTURAL
☒ TS TITLE SHEET
☒ N1.0 GENERAL NOTES
☒ N2.0 GENERAL NOTES
☒ N3.0 TYPICAL SCHEDULES: DOORS, WINDOWS & FINISHES
☒ N4.0 ACCESSIBILITY STANDARDS & DETAILS
☒ N5.0 MULTIPLE FLOOR PLAN CONFIGURATIONS
☐ N5.1 MULTIPLE FLOOR PLAN CONFIGURATIONS
☒ EN.1 ENERGY CALCULATIONS
☒ EN.2 ENERGY CALCULATIONS
☒ EN.3 ENERGY CALCULATIONS
☒ EN.4 ENERGY CALCULATIONS
☒ EN.5 ENERGY CALCULATIONS
☒ EN.6 ENERGY CALCULATIONS
☒ A1.0 TYPICAL FLOOR PLAN
☐ A1.1 TYPICAL FLOOR PLAN FOR CLASSROOM w/ SOLATUBE OPTION
☐ A1.2 RESTROOM OPTION FLOOR PLANS
☒ A2.0 ROOF PLAN
☒ A2.1 ROOF DETAILS
☐ A3.0 NOT USED
☒ A4.0 INTERIOR ELEVATIONS – TYPICAL CLASSROOM
☒ A4.1 INTERIOR ELEVATIONS – RESTROOM OPTION
☐ A5.0 TYPICAL EXTERIOR ELEVATIONS – DURATEMP 303 SIDING OPTION
☐ A5.1 TYPICAL ARCHITECTURAL DETAILS – DURATEMP 303 SIDING OPTION
☐ A5.2 TYPICAL EXTERIOR ELEVATIONS – STUCCO OPTION
☐ A5.3 TYPICAL ARCHITECTURAL DETAILS – STUCCO OPTION
☐ A5.4 TYPICAL EXTERIOR ELEVATIONS – LAP SIDING OPTION
☐ A5.5 TYPICAL ARCHITECTURAL DETAILS – LAP SIDING OPTION
☒ A5.6 TYPICAL EXTERIOR ELEVATIONS – SYNTHETIC STUCCO OPTION
☒ A5.7 TYPICAL ARCHITECTURAL DETAILS – SYNTHETIC STUCCO OPTION
☐ A6.0 NOT USED
☐ A7.0 ARCHITECTURAL OPTIONS DETAILS
☐ A7.1 NOT USED
☒ A7.2 MISCELLANEOUS ARCHITECTURAL DETAILS
☐ A8.0 FIRE–RATING DETAILS

STRUCTURAL
☒ S0.0 STEEL MEMBER PROPERTIES
☐ S1.0 CONCRETE FOUNDATION PLAN – 50 PSF LIVE LOAD
☒ S1.1 CONCRETE FOUNDATION PLAN – 50+15 PSF LIVE LOAD
☐ S1.2 CONCRETE FOUNDATION PLAN – 100 PSF LIVE LOAD
☐ S1.3 CONCRETE FOUNDATION PLAN – 150 PSF LIVE LOAD
☒ S1.4 CONCRETE FOUNDATION DETAILS
☒ S1.5 CONCRETE FOUNDATION DETAILS
☒ S1.6 CONCRETE FOUNDATION DETAILS
☒ S1.7 CONCRETE FOUNDATION OPTIONAL UTILITY OPENINGS IN FOOTINGS
☐ S2.0 WOOD FOUNDATION PLAN – 50 PSF L.L.
☐ S2.1 WOOD FOUNDATION PLAN – 50 PSF L.L. =15 PSF P.L.
☐ S2.2 WOOD FOUNDATION PLAN – 100 PSF L.L.
☐ S2.3 WOOD FOUNDATION PLAN – 150 PSF L.L.
☐ S2.4 WOOD FOUNDATION DETAILS
☐ S3.0 FLOOR FRAMING PLAN – PLYWOOD OR STRUCTO–CRETE
☐ S3.1 FLOOR FRAMING PLAN & DETAILS – CONCRETE/B36 DECK OPTION
☐ S3.2 FLOOR FRAMING PLAN & DETAILS – CONCRETE/N32 DECK OPTION
☒ S3.3 FLOOR FRAMING PLAN & DETAILS – CONCRETE/3W DECK OPTION
☐ S4.0 ROOF FRAMING PLAN & DETAILS – OPEN SOFFIT OPTION
☒ S4.1 ROOF FRAMING PLAN & DETAILS – ENCLOSED SOFFIT OPTION
☒ S4.2 ROOF FRAMING DETAILS
☐ S4.3 OPTIONAL PARAPET FRAMING ELEVATIONS AND DETAILS
☒ S5.0 MOMENT FRAME ELEVATIONS & DETAILS
☒ S5.1 MOMENT FRAME CONNECTION DETAILS
☒ S6.0 TYPICAL LONGITUDINAL & TRANSVERSE FRAME ELEVATIONS
☐ S7.0 NOT USED
☒ S8.0 WOOD STUDS WALL FRAMING ELEVATIONS & SCHEDULES
☒ S8.1 WOOD STUDS WALL FRAMING DETAILS
☐ S9.0 METAL STUDS OPTION WALL FRAMING ELEVATIONS & SCHEDULES
☐ S9.1 METAL STUDS OPTION WALL FRAMING DETAILS
☐ S9.2 TYPICAL METAL STUD FRAMING DETAILS & PROPERTIES
☐ S10.0 RAMP PLANS & NOTES
☐ S10.1 RAMP DETAILS

MECHANICAL
☒ M1.0 TYPICAL REFLECTED CEILING PLAN
☐ M1.1 TYPICAL MECHANICAL PLAN OPTIONS
☐ M1.2 NOT USED
☐ M1.3 RESTROOM OPTION REFLECTED CEILING PLANS
☒ M1.4 MECHANICAL BUILDING SECTION & CEILING DETAILS
☒ M1.5 CEILING & MECHANICAL DETAILS
☒ M1.6 MECHANICAL ROOF DETAILS
☒ M1.7 CEILING NOTES & MECHANICAL NOTES, SCHEDULES

ELECTRICAL
☒ E1.0 TYPICAL ELECTRICAL PLAN
☐ E1.1 RESTROOM OPTIONS ELECTRICAL PLANS
☒ E1.2 ELECTRICAL NOTES, PANEL LAYOUT & DETAILS

PLUMBING
☒ P1.0 RESTROOM OPTION PLUMBING PLANS & FIXTURE SCHEDULE
☒ P2.0 PLUMBING DETAILS & ACCESSIBLE DETAILS
☒ P3.0 PLUMBING ISOMETRICS DRAWINGS

SHEETS WITH SPECIFIC LOW / HIGH SEISMIC DESIGNATIONS / OPTIONS

TS	COVER SHEET
S1.0	50 PSF CONCRETE FOUNDATION PLAN
S1.1	50+15 PSF CONCRETE FOUNDATION PLAN
S1.2	100 PSF CONCRETE FOUNDATION PLAN
S1.3	150 PSF CONCRETE FOUNDATION PLAN
S1.5	CONCRETE FOUNDATION DETAILS
S2.0	WOOD FOUNDATION 50 PSF
S2.1	WOOD FOUNDATION 50 PSF+15 PSF
S2.2	WOOD FOUNDATION 100 PSF
S2.3	WOOD FOUNDATION 150 PSF
S3.0	FLOOR FRAMING PLYWOOD OR STRUCTO–CRETE
S5.0	MOMENT FRAME ELEVATIONS & DETAILS
S5.1	MOMENT FRAME CONNECTION DETAILS

COPYRIGHT: © 2014 BY AMERICAN MODULAR SYSTEMS, INC. ALL RIGHTS RESERVED. NO PART OF THIS DOCUMENT MAY BE REPRODUCED OR TRANSMITTED IN ANY FORM OR BY ANY MEANS, ELECTRONIC, MECHANICAL, PHOTOCOPYING, RECORDING, OR OTHERWISE, WITHOUT THE PRIOR WRITTEN PERMISSION OF AMERICAN MODULAR SYSTEMS, INC. CERTAIN ELEMENTS CONTAINED IN THESE DOCUMENTS ARE REGISTERED TRADEMARKS. ALL PATENTABLE MATERIALS CONTAINED IN THESE DOCUMENTS AND ORIGINATING WITH AMERICAN MODULAR SYSTEMS, INC. SHALL REMAIN THE SOLE PROPERTY OF AMERICAN MODULAR SYSTEMS, INC. SUBMITTAL OR DISTRIBUTION TO MEET OFFICIAL REGULATORY REQUIREMENTS WILL NOT BE CONSTRUED AS PUBLICATION IN DEROGATION OF AMERICAN MODULAR SYSTEM, INC.'S COPYRIGHT OR OTHER RESERVED INTELLECTUAL PROPERTY RIGHTS AND INTERESTS.

American Modular Systems
787 Spreckels Ave. Manteca, CA 95336
Phone (209) 825-1921 - Fax (209) 825-7018
americanmodular.com

MODULAR MANUFACTURER PROPRIETARY STATEMENT

THESE DRAWINGS AND THE MATERIAL CONTAINED THERE–IN ARE THE PROPERTY OF AMERICAN MODULAR SYSTEMS, INC. (AMS) AND SHALL NOT BE REPRODUCED, COPIED OR OTHERWISE DISPOSED OF DIRECTLY OR INDIRECTLY AND SHALL NOT BE USED IN WHOLE OR IN PART TO ASSIST IN THE MAKING OF OR FOR THE PURPOSE OF FURNISHING ANY INFORMATION FOR THE MAKING OF DRAWINGS, PRINTS, APPARATUS OR PARTS THEREOF WITHOUT THE FULL KNOWLEDGE AND WRITTEN CONSENT OF AMS. ALL PATENTABLE MATERIAL CONTAINED HEREIN AND ORIGINATING WITH AMS SHALL BE THE SOLE PROPERTY OF AMS.

PRE–CHECKED SET NAME
24' x 40' THRU 120' x 40' BUILDINGS

SITE SPECIFIC PROJECT NAME
MARIN COMMUNITY CSD - INDIAN VALLEY CAMPUS (1) 24x40 BUILDING

SHEET TITLE
TITLE SHEET

MANUFACTURER PROFESSIONAL OF RECORD ON PC
LICENSED ARCHITECT RANDALL PATRICK CAVANAGH No. C12631 Ren. 3-31-19 STATE OF CALIFORNIA

PROJECT SPECIFIC STATE AGENCY APPROVAL

STATE AGENCY APPROVAL
FILE: 39-O
IDENTIFICATION STAMP DIV. OF THE STATE ARCHITECT
02 116495
AC TM FLS SS
DATE 12-18-2017
ACS: T. MARKES SSS: V. ODONNELL
FLS: K. LAVELLA

BASED ON PC# 02-113876
PRE–CHECK (PC) DOCUMENT – CODE: 2013 CBC
A SEPARATE PROJECT APPLICATION FOR CONSTRUCTION IS REQUIRED

REVISIONS
1
2
3
4

DRAWN BY:	BA
SCALE:	AS NOTED
DATE:	11/10/17

SHEET NUMBER
TS

SECTION 1 GENERAL REQUIREMENTS

1. GENERAL

A. THE REQUIREMENTS OF THE GENERAL CONDITIONS OF THE AGREEMENT AND THIS GENERAL REQUIREMENT APPLY TO THE SEVERAL TRADE SECTIONS WITH THE SAME FORCE AS THOUGH FULLY REPEATED IN EACH TRADE SECTION.

B. NAME BRANDS ARE INDICATED TO ESTABLISH A STANDARD OF QUALITY. ITEMS OF EQUAL OR BETTER QUALITY MAY BE SUBSTITUTED FOR THE LISTED BRAND NAMED PRODUCTS WITH THE WRITTEN APPROVAL OF D.S.A. AND THE ARCHITECT.

C. ALL WORK SHALL COMPLY WITH THE REQUIREMENTS OF TITLES 19 AND 24 CALIFORNIA CODE OF REGULATIONS, 2013 C.B.C. NO CHANGES SHALL BE MADE FROM D.S.A. APPROVED DRAWINGS OR SPECIFICATIONS WITHOUT PRIOR WRITTEN APPROVAL OF D.S.A. AND THE ARCHITECT.

2. SCOPE OF WORK

A. THE WORK CONSISTS OF MANUFACTURING OFF-SITE IN A PLANT AND INSTALLING ON-SITE, MODULAR RELOCATABLE BUILDINGS AS DEFINED HEREIN AND SHOWN AND DETAILED ON DRAWINGS.

B. ALL REQUIREMENTS OF TITLE 24 OF THE STATE OF CALIFORNIA, CODE OF REGULATIONS, RELATING TO INSPECTIONS AND VERIFIED REPORTS SHALL BE COMPLIED WITH AND SHALL INCLUDE:

1. GENERAL RESPONSIBLE CHARGE OF FIELD ADMINISTRATION BY THE ARCHITECT OF RECORD.

2. INSPECTION IN-PLANT DURING THE COURSE OF CONSTRUCTION BY AN INSPECTOR APPROVED BY THE DIVISION OF THE STATE ARCHITECT AND THE DISTRICT ARCHITECT. THE INSPECTOR SHALL BE RESPONSIBLE FOR AND APPROVED TO INSPECT THE GENERAL CONSTRUCTION WELDING, MECHANICAL, AND ELECTRICAL WORK. COST OF THESE INSPECTIONS SHALL BE BORNE BY THE SCHOOL DISTRICTS.

3. ON-SITE INSPECTION OF THE BUILDING INSTALLATION ELECTRICAL AND UTILITY INSTALLATION OR CONNECTIONS BY AN INSPECTOR APPROVED BY THE DIVISION OF THE STATE ARCHITECT AND THE DISTRICT ARCHITECT AND RETAINED BY THE SCHOOL DISTRICT.

4. OTHER SPECIAL TESTS OR INSPECTIONS AS MAY BE REQUIRED BY THE DIVISION OF THE STATE ARCHITECT.

5. ADDENDUMS SHALL BE SIGNED BY THE ARCHITECT & APPROVED BY D.S.A.

6. CHANGE ORDERS AND CONSTRUCTION CHANGE DOCUMENTS (CCD) SHALL BE SIGNED BY THE OWNER & ARCHITECT & APPROVED BY D.S.A.

7. THE TESTING LAB SHALL BE IN THE EMPLOY OF THE OWNER.

8. ALL CONTRACTORS SHALL VERIFY ALL WORK CONDITIONS, DIMENSIONS AND DETAILS AND REPORT ANY OR ALL OMISSIONS AND DISCREPANCIES TO THE DESIGNER/OWNER IMMEDIATELY BEFORE COMMENCING WORK.

9. EACH CONTRACTOR TO BE RESPONSIBLE TO SEE THAT THEIR WORK CONFORMS TO ALL GOVERNMENTAL CODES WHETHER OR NOT SO STATED ON THE DRAWINGS.

10. ALL MATERIALS AND WORKMANSHIP TO CONFORM TO THE LATEST REQUIREMENTS OF THE GOVERNING BUILDING CODES IN EFFECT AT TIME OF DSA APPLICATION.

11. ALL MANUFACTURED ARTICLES, MATERIALS AND EQUIPMENT SHALL BE APPLIED, INSTALLED, CONNECTED AND ERECTED PER MANUFACTURER'S DIRECTIONS AND INSTRUCTIONS.

12. SHOP DRAWINGS MAY BE REQUIRED. IF SO, THEY WILL BE ACCURATELY DRAWN TO A LARGE ENOUGH SCALE TO SHOW ALL PERTINENT FEATURES OF THE ITEM AND ITS CONNECTION TO RELATED WORK.

13. THE MANUFACTURER OF BUILDING IS TO PLACE TWO PERMANENT METAL IDENTIFICATION LABEL ON EACH MODULE, MECHANICALLY FASTENED TO THE FRAME SEE "GENERAL DESIGN REQUIREMENTS", SHEET N2.0. FOR PROJECTS MANUFACTURED OFF-SITE, THE PLANT INSPECTOR IS TO INDICATE THE MANUFACTURER'S NAME AND SERIAL NUMBER OF EACH MODULE ON THE VERIFIED REPORT AND D.S.A. APP. NUMBER.

14. ALL TESTS AND INSPECTIONS REQUIRED BY DSA SHALL BE COMPLIED WITH. ALL TESTS REQUIRED BY FIRE AND LIFE SAFETY REGULATIONS SHALL BE BY A NATIONALLY RECOGNIZED TESTING LABORATORY.

SECTION 2 FOUNDATION

1. ASSUMED ALLOWABLE SOIL BEARING:
   - 1500 P.S.F. FOR CONCRETE FOUNDATIONS EMBEDDED 12" MIN. BELOW GRADE.
   - 1000 P.S.F. FOR WOOD FOUNDATIONS ON GRADE.

2. FOOTINGS SHALL BE LOCATED ON UNDISTURBED, FIRM, NATURAL SOIL, APPROVED COMPACTED FILL, OR ON AN APPROVED PAVED SURFACE.

NOTE: THE FOUNDATION SYSTEM PRESENTED HEREIN COMPLIES WITH INTERPRETATION OF REGULATIONS, IR 16-1, ISSUED BY DIVISION OF THE STATE ARCHITECT, FOR TEMPORARY BUILDINGS. THIS FOUNDATION SYSTEM IS NON-CONVENTIONAL AND THE STRUCTURAL ENGINEER TAKES NO RESPONSIBILITY FOR ITS CONSTRUCTION OR LONGEVITY.

3. WORK NOT INCLUDED:

A. ALL ON-SITE OR OFF-SITE UTILITIES AND THE CONNECTION OF THEM TO THE BUILDING UNLESS INDICATED ON THE DRAWINGS.

B. ALL LEVELING, GRADING OR OTHER SITE PREPARATION EXCEPT CONCRETE OR WOOD LEVELING STRIPS WHERE REQUIRED, UNLESS OTHERWISE INDICATED ON THE DRAWINGS.

C. FIRE ALARM SYSTEM, PROGRAM BELL, PUBLIC ADDRESS SYSTEM, INTERCOM SYSTEM, TV, TELEPHONE SYSTEM, UNLESS OTHERWISE INDICATED ON THE DRAWINGS, OR MODIFIED BY CHANGE ORDER.

4. WHEELS AND HITCH SHALL REMAIN THE PROPERTY OF THE CONTRACTOR.

5. ACCESSIBILITY OF SITE: THE SCHOOL DISTRICT SHALL PROVIDE ACCESS TO THE SITE FOR THE INSTALLATION OF BUILDINGS. REMOVAL OF TREES, SHRUBS, FENCING, SPRINKLERS ETC. NECESSARY FOR THE MOVE-IN OF BUILDINGS SHALL BE THE RESPONSIBILITY OF THE SCHOOL DISTRICT.

02-113876 – 24' x 40' – 120' x 40' EXPOSED STEEL

SECTION 3 CONCRETE

1. CONCRETE CONSTRUCTION SHALL CONFORM TO ACI 318-11.

2. THE MINIMUM 28 DAY STRENGTH AND TYPE OF CONCRETE SHALL BE AS FOLLOWS:
   SLABS ON GRADE & FOUNDATIONS....... 3000 PSI (150 PCF)
   CONCRETE OVER METAL DECK.............. 3000 PSI (110 PCF)

3. THE MAXIMUM WATER TO CEMENT (W/C) RATIO SHALL BE 0.55 FOR FOUNDATIONS AND 0.40-0.45 FOR CONCRETE OVER METAL DECK SLABS.

4. CONCRETE SLUMP SHALL BE 4" ± 1".

5. CEMENT SHALL CONFORM TO ASTM C150, TYPE I OR II.

6. CONCRETE AGGREGATES:
   A. NATURAL SAND AND ROCK AGGREGATES SHALL CONFORM TO ASTM C33.
   B. LIGHTWEIGHT AGGREGATE SHALL CONFORM TO ASTM C330.
   C. MAX AGGREGATE SIZE SHALL BE 1"±1/4".

7. REINFORCING SHALL CONFORM TO ASTM A615-GRADE 60, UNLESS OTHERWISE NOTED.

8. CONCRETE COVERAGE SHALL BE AS FOLLOWS, UNLESS OTHERWISE NOTED ON DRAWINGS:
   CONCRETE DEPOSITED DIRECTLY AGAINST GROUND (EXCEPT SLABS) ......3"
   CONCRETE EXPOSED TO GROUND BUT PLACED IN FORMS........................2"
   SLABS (ON GROUND)....................................POSITION IN CENTER OF SLAB

9. ALL BARS SHALL HAVE A CLASS B MINIMUM SPLICE LAP PER DETAILS 6&9/S1.4, UNLESS OTHERWISE NOTED.

10. REINFORCING BARS SHALL NOT BE WELDED UNLESS SPECIFICALLY DETAILED IN THE APPROVED DRAWINGS. BARS DETAILED TO BE WELDED SHALL BE ASTM A706 BARS AND WELDING ELECTRODES SHALL BE E80XX. WELDING SHALL CONFORM WITH AWS D1.4-11 AND SHALL BE CONTINUOUSLY INSPECTED.

11. WELDED WIRE FABRIC SHALL CONFORM TO ASTM A185 AND SHALL BE LAP SPLICED TWO SQUARES MINIMUM EACH DIRECTION.

12. NOTIFY THE STRUCTURAL ENGINEER PRIOR TO PLACING CONCRETE.

SECTION 5 STEEL

1. GENERAL – ALL WORK SHALL CONFORM TO THE REQUIREMENTS OF AISC STANDARD SPECIFICATIONS, TITLE 24 OF CALIFORNIA CODE OF REGULATIONS AND THE AMERICAN IRON AND STEEL INSTITUTE SPECIFICATIONS FOR DESIGN OF STEEL STRUCTURAL MEMBERS. A COPY OF TITLE 24 SHALL BE KEPT AT THE JOBSITE AT ALL TIMES.

2. WELDING – ALL WELDING DONE BY SHIELDED ELECTRIC-ARC OR FLUX CORED-ARC PROCESS COMPLYING WITH REQUIREMENTS OF THE "STRUCTURAL WELDING CODE" OF THE AMERICAN WELDING SOCIETY.WELDING DONE BY OPERATORS QUALIFIED BY TESTS ACCEPTABLE TO THE DIVISION OF THE STATE ARCHITECT. WELDING INSPECTION PER TITLE 24, PART 2, CCR, SECTIONS 1705A2.2.1 AND 1705.A2.2.5 WELDING ELECTRODE SHALL BE E70XX. ALL WELDS USED IN PRIMARY MEMBERS AND CONNECTIONS IN THE LATERAL FORCE-RESISTING SYSTEMS SHALL BE MADE WITH A FILLER METAL THAT HAS A MINIMUM CHARPY V-NOTCH TOUGHNESS OF 20FT-LBS AT ZERO DEGREES F AND COMPLYING WITH AWS D1.8-09. SECTION 6.3.

3. STRUCTURAL STEEL SHAPES SHALL CONFORM TO THE FOLLOWING:

A. STRUCTURAL STEEL CHANNELS SHALL CONFORM TO ASTM A572 (50 KSI) TYP. U.N.O.

B. PIPE COLUMNS SHALL CONFORM TO ASTM A-53 WITH SULFUR CONTENT NOT EXCEEDING 0.05% TYP. U.N,O.

C. STEEL TUBING SHALL CONFORM TO ASTM A-500 GRADE B OR A.S.T.M. A579 GRADE 50 FOR GAUGE TUBING-TYP. U.N.O.

D. STEEL PLATES, ANGLES, BARS AND MISC. SHAPES SHALL CONFORM TO ASTM A36 (36 KSI) TYP. U.N.O.

E. STRUCTURAL WELDS ARE DESIGNED FOR FULL ALLOWABLE STRESS UNLESS OTHERWISE NOTED.

4. ERECTION – STRUCTURAL STEEL ERECTED TRUE, STRAIGHT, PLUMB AND TO ITS DESIGNATED LOCATIONS. FIELD CONNECTIONS BOLTED OR WELDED AS INDICATED ON THE DRAWINGS.

5. NAILS, BOLTS, SCREWS AND NUTS, ETC. – FOR EXTERIOR WORK SHALL BE CADMIUM PLATED OR GALVANIZED.

A. BOLTS FOR STRUCTURAL STEEL JOINTS SHALL CONFORM TO A.S.T.M. A-307 UNLESS OTHERWISE NOTED. ALL HOLES FOR MACHINE AND CARRIAGE BOLTS THRU STEEL TO BE DRILLED, OR TORCH PILOT HOLE AND REAM MIN. +1/16" TO BOLT SIZE. NELSON STUDS (WELDED TO STEEL) MAY BE SUBSTITUTED FOR BOLTS SAME LENGTH AND DIAMETER.

6. HANDRAILS – FABRICATED, AS DETAILED, WELDS GROUND SMOOTH.

7. SHOP PAINT

A. EXPOSED STEEL COATED WITH ONE SHOP COAT OF RED OXIDE PRIMER.
~~B. NON-EXPOSED STEEL COATED WITH ONE SHOP COAT OF RED OXIDE PRIMER.~~
C. ALL SURFACES THOROUGHLY CLEANED BY EFFECTIVE MEANS PRIOR TO APPLICATION OF SHOP COATS.

8. TESTS
   A. PROVIDE MILL CERTIFICATES OR TEST ALL STEEL MEMBERS PER TITLE-24 PART 2, CCR SECTION 1704A.3

SECTION 6 CARPENTRY

1. SCOPE OF WORK
   CONTRACTOR SHALL PROVIDE ALL LABOR, MATERIALS AND SERVICES TO INSTALL CARPENTRY.

2. MATERIALS
   LUMBER GRADE MARKED IN ACCORDANCE WITH "STANDARD GRADING AND DRESSING RULES NO. 17" OF WEST COAST LUMBER INSPECTION BUREAU, OR "WESTERN LUMBER GRADING RULES", 2011 EDITION OF WESTERN WOOD PRODUCTS ASSOCIATION. OSB OR PLYWOOD GRADE MARKED IN ACCORDANCE WITH PRODUCT STANDARD PS 1-09 FOR SOFTWOOD OSB OR PLYWOOD, OF AMERICAN PLYWOOD ASSOCIATION. EACH SHEET SHALL BEAR THE STAMP OF APA, PITTSBURGH TESTING, OR TECO.

A. JOISTS, HEADERS, PLATES, STUDS: DOUGLAS FIR S4S #2 OR HEM FIR S4S #2 MINIMUM, U.N.O. NOTE: MSR 1650 E1.5 MAY BE SUBSTITUTED FOR #2 GRADE IF IT MEETS THE STRUCTURAL REQUIREMENTS FOR FLOOR AND ROOF MEMBERS.

B. POSTS AND TIMBERS: DOUGLAS FIR S4S #1 OR HEM FIR S4S #1 MIN.

C. BLOCKING: DOUG FIR #3, OR HEM FIR #3, OR STD. & BET.

D. SILLS AND LUMBER & SHIM PLATES IN CONTACT WITH CONCRETE, MASONRY OR EARTH: DOUG FIR #2 OR HEM FIR #2 MIN. PRESSURE TREATED IN ACCORDANCE WITH CBC 2304.11.2. EACH PIECE SHALL BEAR AWPA STAMP. AWPA STANDARD U1 & T1 GROUND CONTACT, D.F. (OR H.F.) #2 ABOVE GROUND.

E. MOISTURE BARRIER: KRAFT WATERPROOF BUILDING PAPER, OR 15 LB. FELT, CBC SECTION 1404.2.

F. STUDS – S4S DOUG FIR #2 OR #2 HEM FIR. MAXIMUM MOISTURE CONTENT OF 19% AT TIME OF INSTALLATION.

G. FASTENERS – NAILS SHALL BE CORROSION RESISTANT PER C.B.C. 2304.9.1.1 COMMON NAILS FOR EXTERIOR SIDING & FOUNDATION ONLY.

H. BUILDING TRIM – 2x RESAWN SELECT D.F., H.F., OR CEDAR.

J. DOOR/WINDOW TRIM – 1x4 RESAWN D.F., H.F., OR CEDAR.

K. FRAMING CONNECTORS SHALL BE FROM SIMPSON CATALOG LATEST ED.

L. FIRE BLOCKS SHALL CONFORM TO CBC SECTION 718.2

M. ALL NAILS SHALL BE COMMON NAILS UNLESS OTHERWISE NOTED.

N. FOUNDATION LUMBER: ALL CUT ENDS AND HOLES IN PRESSURE TREATED LUMBER SHALL BE TREATED WITH "CUPRINOL".

O. ALL BOLTS AND LAG SCREWS SHALL COMPLY WITH THE 2012 NATIONAL DESIGN SPECIFICATION FOR WOOD CONSTRUCTION (ANSI\AWC NDS-2012).

P. HOLES FOR BOLTS IN WOOD SHALL BE BORED WITH A BIT OF THE SAME NOMINAL DIAMETER AS THE BOLT + 1/16".

Q. HOLES FOR LAG SCREWS SHALL BE FIRST BORED TO THE SAME NOMINAL DIAMETER AND DEPTH AS THE SHANK. THE REMAINDER OF THE HOLE SHALL BE NO LARGER THAN THE ROOT OF THE THREAD.

R. ALL BOLTS AND LAG SCREWS SHALL BE PROVIDED WITH METAL WASHERS UNDER HEADS AND NUTS WHICH BEAR ON WOOD.

3. WORKMANSHIP

A. FRAMING – SECURELY NAILED, BRIDGED AND BLOCKED TO FORM RIGID STRUCTURE. WORK CUT, FITTED AND ASSEMBLED LEVEL PLUMB AND TRUE TO LINE. TRIM IN AS LONG LENGTHS AS POSSIBLE WITH ALL STANDING TRIM IN ONE PIECE. TRIM SEALED AT ALL EDGES.

B. NAILING – IN ACCORDANCE WITH TITLE 24, CALIFORNIA BUILDING CODE, TABLE 2304.9.1

C. EXTERIOR WALLS – FACTORY FABRICATED. CAULKING PROVIDED BETWEEN PERIMETER OF WALL AND STRUCTURAL MEMBERS PROVIDING WEATHER-PROOF AND WATER-TIGHT SEAL. NECESSARY CLOSERS, SEALS, AND FLASHINGS PLACED AT TOP AND BASE SUPPORT OF PANELS AND AROUND OPENINGS.

D. NAILS INTO P.T. LUMBER TO BE HOT DIPPED GALVANIZED.

E. MACHINE APPLIED NAILING: USE OF MACHINE NAILING IS SUBJECT TO A SATISFACTORY JOBSITE DEMONSTRATION FOR EACH PROJECT AND THE APPROVAL BY THE PROJECT ARCHITECT OR STRUCTURAL ENGINEER AND THE DIVISION OF THE STATE ARCHITECT. THE APPROVAL IS SUBJECT TO CONTINUED SATISFACTORY PERFORMANCE. MACHINE NAILING WILL NOT BE APPROVED IN 5/16" OSB. IF NAILHEADS PENETRATE THE OUTER PLY MORE THAN WOULD BE NORMAL FOR A HAND HAMMER OR IF MINIMUM ALLOWABLE EDGE DISTANCES ARE NOT MAINTAINED THE PERFORMANCE WILL BE DEEMED UNSATISFACTORY.

F. MOISTURE BARRIER – APPLIED TO STUDS WEATHER-BOARD FASHION, HORIZONTAL JOINTS LAPPED MIN 6" INCLUDING BUILDING CORNERS. SHEATHING APPLIED OVER MOISTURE BARRIER.

G. TRIM SEALED AT ALL EDGES. SEALANT PAINTED TO MATCH TRIM OR SIDING UNLESS TRANSPARENT TYPE.

SECTION 7A SHEET METAL

1. SCOPE OF WORK

   CONTRACTOR SHALL PROVIDE ALL LABOR, MATERIALS AND SERVICES TO INSTALL INDICATED SHEET METAL.

2. MATERIALS

A. SHEET METAL – STEEL SHEETS HOT DIP GALVANIZED WITH 1.25 OZ. PER SQUARE FOOT ZINC COATING CONFORMING TO ASTM A526. MINIMUM 26 GA. UNLESS OTHERWISE NOTED ON THE DRAWINGS.

B. SOLDER – OF STAND, GRADE "A" OF EQUAL PARTS, ARD BRAND, LEAD AND TIN ASTM B32.

C. FLUX – ZINC SATURATED MURIATIC ACID.

D. GUTTERS: 26 GA. G-90 GALV. STEEL
   DOWNSPOUTS: 2"x3" CONVOLUTED 30 GA. G-90 GALV. STEEL
   GUTTER ENDCAPS: 26 GA. G-90 GALV. STEEL
   GUTTER CLIPS: 18 GA. G-90 GALV. STEEL

3. WORKMANSHIP

   SHEET METAL ACCURATELY FORMED TO DIMENSIONS AND SHAPES DETAILED WITH TRUE STRAIGHT LINES, CORNERS AND ANGLES. FLASHING INSTALLED IN LONGEST LENGTHS POSSIBLE. EXTERIOR WORK FORMED, FABRICATED AND INSTALLED SO THAT IT ADEQUATELY PROVIDES FOR EXPANSION AND CONTRACTION IN THE COMPLETED WORK AND FINISHES WATER AND WEATHER TIGHT. ALUMINUM SHALL BE SEPARATED FROM FERROUS METAL BY POLYETHYLENE TAPE OR FLOOD COAT OF ASPHALTIC PAINT.

SECTION 7B METAL ROOFING

1. SCOPE OF WORK
   CONTRACTOR SHALL PROVIDE ALL LABOR, MATERIALS AND SERVICES TO INSTALL METAL ROOFING. TEST RESULTS OR CALCULATIONS SHOWING THE ROOFING SYSTEM WILL WITHSTAND THE UPLIFT OF 110 MPH ULTIMATE WIND SPEED SHALL BE SUBMITTED WITH THE PLANS AND SPECIFICATIONS.

2. MATERIALS

A. ROOF: 3 INCH STANDING SEAM, MINIMUM 20-GAUGE G-90 GALV. INTERLOCKING (UN-PENETRATED) SHEET STEEL PANELS (G90). ALTERNATE: 26 GAUGE WHEN INSTALLED OVER PLYWOOD SHEATHING.

B. CLASS B FIRE RATING

SECTION 7C SEALANT

1. SCOPE OF WORK
   CONTRACTOR SHALL PROVIDE ALL LABOR, MATERIAL AND SERVICES TO SEAL BUILDINGS.

2. MATERIALS
   VULKEM SEALANT, POLYURETHANE, MANUFACTURED BY MAMECO INTERNATIONAL FOR ROOFS. "GEOCEL" SILICONIZED CAULK, GE, DUPONT, EAGLESEAL OR DAP FOR ALL OTHER APPLICATIONS, OR EQUAL.

3. WORKMANSHIP
   SEALANT APPLIED TO DRY CLEAN SURFACES, WHEREVER INDICATED ON DETAILS AND AS NEEDED TO MAKE BUILDING WATERTIGHT IN ACCORDANCE WITH MANUFACTURER'S SPECIFICATIONS.

SECTION 8 HOLLOW METAL DOORS AND FRAMES

1. SCOPE OF WORK
   CONTRACTOR SHALL PROVIDE ALL LABOR, MATERIALS AND SERVICES TO INSTALL HOLLOW METAL DOORS AND FRAMES.

2. MATERIALS

A. DOORS – INSULATED TYPE L FULL FLUSH, MANUFACTURED BY AMWELD MANUFACTURING COMPANY, 18 GA. 1-3/4" THICK PER CS242 MIN, REINFORCE FOR HARDWARE-BOTH FACES FOR CLOSER, SOUND DEADEN INTERIOR.

B. FRAMES – 16 GA COLD ROLLED, 2" FACES, CS242 MIN. 3 ANCHORS PER JAMB + ADJUSTABLE FLOOR ANCHOR, EACH JAMB REINFORCE FOR HARDWARE. PROVIDE STRIKE BOX, PROVIDE SOUND DEADENING: 1/8" UNDERCOATING OR INSULATING FILL.

3. WORKMANSHIP
   ALL WORK FABRICATED IN SHOP TO REQUIRED PROFILES BY FORMING AND WELDING, WITH ARISES AND EDGES STRAIGHT, SHARP FIT FABRICATED ACCURATELY WITH SQUARE CORNERS, HAIRLINE JOINTS AND SURFACES FREE FROM WARP, WAVE, BUCKLE OR OTHER DEFECTS AFTER FABRICATION, DOORS AND FRAMES CLEANED THOROUGHLY, ALL WELDS GROUND SMOOTH AND GIVEN PRIME COAT.

SECTION 9A EXTERIOR PLASTER

LATHING AND PLASTERING MATERIALS AND ACCESSORIES SHALL BE MARKED BY THE MANUFACTURER'S DESIGNATION TO INDICATE COMPLIANCE WITH THE APPROPRIATE STANDARDS REFERENCED IN THIS SECTION AND STORED IN SUCH A MANNER TO PROTECT THEM FROM THE WEATHER, PER C.B.C 2507.1.

LATHING AND PLASTERING MATERIALS SHALL CONFORM TO THE STANDARDS LISTED IN C.B.C. TABLE 2507.2 AND CHAPTER 35, AND, WHERE REQUIRED FOR FIRE PROTECTION, SHALL ALSO CONFORM TO THE PROVISIONS OF CHAPTER 7.

GYPSUM BOARD AND GYPSUM PLASTER CONSTRUCTION SHALL BE OF THE MATERIALS LISTED IN C.B.C. TABLES 2506.2 AND 2507.2. THESE MATERIALS SHALL BE ASSEMBLED AND INSTALLED IN COMPLIANCE WITH THE APPROPRIATE STANDARDS LISTED IN TABLES 2508.1 AND 2511.1, AND CHAPTER 35 (PER 2508.1).

2510.6 WATER-RESISTIVE BARRIERS. WATER-RESISTIVE BARRIERS SHALL BE INSTALLED AS REQUIRED IN SECTION 1404.2, AND WHERE APPLIED OVER WOOD-BASED SHEATHING, SHALL INCLUDE A WATER-RESISTIVE VAPOR-PERMEABLE BARRIER WITH A PERFORMANCE AT LEAST EQUIVALENT TO TWO LAYERS OF GRADE D PAPER.

EXCEPTION: WHERE THE WATER-RESISTIVE BARRIER THAT IS APPLIED OVER WOOD-BASED SHEATHING HAS A WATER RESISTANCE EQUAL TO OR GREATER THAN THAT 60-MINUTE GRADE D PAPER AND IS SEPARATED FROM THE STUCCO BY AN INTERVENING, SUBSTANTIALLY NONWATER-ABSORBING LAYER OR DRAINAGE SPACE.

1. PLASTER NOTES: PLASTERING WITH CEMENT PLASTER SHALL NOT BE LESS THAN THREE COATS WHEN APPLIED OVER METAL LATH OR WIRE FABRIC LATH AND SHALL NOT BE LESS THAN TWO COATS WHEN APPLIED OVER MASONRY CONCRETE OR GYPSUM BACKING AS SPECIFIED IN SECTION 2510.5.
   A. THE FIRST COAT SHALL BE APPLIED WITH SUFFICIENT MATERIAL AND PRESSURE TO FILL SOLIDLY ALL OPENINGS IN THE LATH. THE SURFACE SHALL BE SCORED HORIZONTALLY SUFFICIENTLY ROUGH TO PROVIDE ADEQUATE BOND TO RECEIVE THE SECOND COAT.
   B. THE SECOND COAT SHALL BE BROUGHT OUT TO PROPER THICKNESS, RODDED AND FLOATED SUFFICIENTLY ROUGH TO PROVIDE ADEQUATE BOND FOR THE FINISH COAT. THE SECOND COAT SHALL HAVE NO VARIATION GREATER TO THAN 1/4 INCH (6.4 mm) IN ANY DIRECTION UNDER 5-FOOT STRAIGHT EDGE.
   C. THE FINISH COATS SHALL BE APPLIED OVER BASE COATS THAT HAVE BEEN IN PLACE FOR THE TIME PERIODS SET FORTH IN ASTM C 926. THE THIRD OR FINISH COAT SHALL BE APPLIED WITH SUFFICIENT MATERIAL AND PRESSURE TO BOND TO AND TO COVER THE BROWN COAT AND SHALL BE OF SUFFICIENT THICKNESS TO CONCEAL THE BROWN COAT.

SECTION 9B PAINTING

1. SCOPE OF WORK.
   CONTRACTOR SHALL PROVIDE ALL LABOR, MATERIALS AND SERVICES TO PAINT BUILDING. ALL EXPOSED SURFACES OF BUILDING AND RAMPS SHALL BE PAINTED EXCEPT ALUMINUM WINDOW FRAMES, THRESHOLDS, AND ROOFING.

2. MATERIALS

A. FOR EXTERIOR WOOD:

REF.BRAND	DUNN EDWARDS	KELLY MOORE	SHERWIN WILLIAMS	SINCLAIR
PRIMER	42-9M	1240	Y24W20	289-N
FINISH	QD-60-XX	1240-XXX	B54WZ102	GE2-NXX

B. FOR INTERIOR TRIM:

REF.BRAND	DUNN EDWARDS	KELLY MOORE	SHERWIN WILLIAMS	SINCLAIR
FINISH	W450-XX	1650-XXX	A26W11	40XX

C. FOR METAL:

REF.BRAND	DUNN EDWARDS	KELLY MOORE	SHERWIN WILLIAMS	SINCLAIR
PRIMER	43-4	1710	B50NZ6	15N
FINISH	10-XX	1700-XXX	B54WZ102	GE2-NXX

D. INTERIOR PAINT & COATINGS SHALL COMPLY WITH TITLE 24, PART 11, "CAL-GREEN" SECTION 5.504.4.3.

3. WORKMANSHIP
   ALL EXPOSED SURFACES SHALL BE PAINTED EXCEPT ALUMINUM WINDOW FRAMES AND THRESHOLDS. MATERIAL SHALL BE OF THE GRADE SPECIFIED OR EQUAL.

A. EXTERIOR WOOD SIDING, TRIM AND SKIRTING FLAT OR SEMI-GLOSS LATEX – APPLY ONE COAT OF PRIME AND AT LEAST ONE FINISH COAT. PRIME COAT SHALL BE BRUSHED ON OR SPRAYED AND BACK BRUSHED INTO ALL GROOVES IN THE SIDING. IF NECESSARY, IN THE OPINION OF THE INSPECTOR, AN EXTRA COAT SHALL BE APPLIED TO ALL GROOVES SO THAT THE FINISH COAT WILL HAVE A UNIFORM APPEARANCE. ALLOW PRIME COAT TO DRY ACCORDING TO MANUFACTURER'S RECOMMENDATION. PRIME AND FINISH COATS SHALL BE COMPATIBLE AND MANUFACTURED BY THE SAME COMPANY.

B. INTERIOR TRIM – TRIM NOT PRE-COATED SHALL BE PAINTED WITH TWO COATS OF SEMI-GLOSS LATEX OVER PRIMER.

C. INTERIOR HARDWOOD CABINETS – TWO COATS LOW LUSTER POLYURETHANE FINISH. APPLY FIRST COAT THINNED WITH ONE QUART MINERAL SPIRITS PER GALLON. APPLY SECOND COAT AS RECOMMENDED BY MANUFACTURER.

D. METAL – ALL METAL SURFACES SHALL BE PAINTED WITH TWO COATS OF ALKYD FINISH COAT OVER ZINC CHROMATE OR EQUAL RUST INHIBITING PRIMER.

E. RAMP – ONE COAT OF FERROX NON-SLIP (0.8 MIN. C.O.F.) SURFACING AS MANUFACTURED BY AMERICAN ABRASIVE METALS OR COMPARABLE. ALL PAINTS OF THE TYPE INDICATED SHALL BE LISTED ON THE STATE OF CALIFORNIA QUALIFIED PRODUCTS LIST FOR MAINTENANCE PAINTS 8010-91G-98A DATED JULY 1989. OR EQUAL.

F. SUBMIT ONE SET OF COLOR SAMPLES TO ARCHITECT FOR EACH PRODUCT TO ASSIST IN SELECTION.

SECTION 9C INTERIOR AIR QUALITY CONTROL

THE INTERIOR ENVIRONMENT SHALL BE ASSEMBLED WITH PRODUCTS THAT CONTRIBUTE TO A HEALTHY INDOOR AIR QUALITY (IAQ). THE FOLLOWING SHALL COMPLY TITLE 24, PART 11 ("CAL-GREEN"):

1. ADHESIVES, SEALANTS, CAULKS	SECTION 5.504.4.1
2. PAINTS, COATINGS	SECTION 5.504.4.3
3. AEROSOL PAINTS & COATINGS	SECTION 5.504.4.3.1
4. CARPET SYSTEMS	SECTION 5.504.4.4
5. CARPET CUSHION OR PAD	SECTION 5.504.4.4.1
6. COMPOSITE WOOD PRODUCTS	SECTION 5.504.4.5
7. RESILIENT FLOORING SYSTEMS	SECTION 5.504.4.6

SECTION 13 SITE ASSEMBLY

1. SCOPE OF WORK
   CONTRACTOR SHALL PROVIDE ALL LABOR MATERIALS AND SERVICES TO PREPARE THE BUILDING ELEMENTS, TRANSPORT THEM FROM THE PLANT TO THE SITE AND TO COMPLETE THE ASSEMBLY AT THE SITE. THE CONDITION OF THE SITE, SUCH AS DRAINAGE AND SOIL BEARING CAPACITY, SHALL BE THE RESPONSIBILITY OF THE SCHOOL DISTRICT. UNLESS SPECIFICALLY CALLED FOR IN THE CONTRACT, STEPS, RAMPS, OR HANDRAILS SHALL BE THE RESPONSIBILITY OF THE CONTRACTOR.

2. ASSEMBLY OF ELEMENTS

A. IN A LOCATION ON THE SITE AS DETERMINED BY THE SCHOOL DISTRICT, (APPROVED BY DSA) THE CONTRACTOR SHALL PLACE WOOD LEVELING STRIPS OR OTHER SUITABLE SUPPORTS AS DETAILED ON THE DRAWINGS.

B. THE ELEMENTS SHALL BE BROUGHT TO THE SITE ON WHEEL ASSEMBLY AND TRANSFERRED TO THE PREPARED SITE. GREAT CARE SHALL BE TAKEN TO AVOID DAMAGE TO THE ELEMENTS BY RACKING OR BUMPING EACH OTHER.

C. CONNECTION OF THE ELEMENTS TOGETHER SHALL BE DONE ACCORDING TO INSTRUCTION ON THE DRAWINGS. FLASHINGS, TRIM AND OTHER LOOSE ITEMS SHALL BE INSTALLED PER DETAILS ON THE DRAWINGS.

SECTION 23 AIR CONDITIONING

1. SCOPE OF WORK (SEE SHEET M1.7 FOR HVAC SPEC. AND NOTES) CONTRACTOR SHALL PROVIDE ALL LABOR, MATERIALS AND SERVICES TO INSTALL THE AIR CONDITIONING SYSTEM AS SHOWN ON THE DRAWINGS AND SPECIFICATIONS, INCLUDING A/C UNITS AND ACCESSORIES, REMOTE THERMOSTAT, GRILLS AND POWER WIRING COMPLETE TO LOAD CENTER. CONTRACTOR SHALL INSTRUCT OWNER'S OPERATORS ON OPERATION AND MAINTENANCE OF A/C SYSTEM.

2. EQUIPMENT
   SEE NOTE ON FLOOR PLAN FOR SIZE AND TYPE.

3. WORKMANSHIP
   UNITS SHALL BE INSTALLED COMPLETE AND OPERATING WITH ALL ACCESSORIES IN ACCORDANCE WITH THE MANUFACTURER'S INSTRUCTIONS.

SECTION 26 ELECTRICAL

1. SCOPE OF WORK

A. CONTRACTOR SHALL PROVIDE ALL LABOR, MATERIALS AND SERVICES FOR ELECTRICAL INSTALLATION COMPLETE WITH ASSOCIATED EQUIPMENT AND FIXTURES, IN OPERATING CONDITION READY FOR USE. THE WORK INCLUDES: LIGHT AND POWER SYSTEMS, LIGHTING FIXTURES COMPLETE WITH LAMPS, CONNECTIONS AND DISCONNECTS TO A/C EQUIPMENT, EMERGENCY VOICE ALARM COMMUNICATION SYSTEMS (EVACS).

B. PROVIDE CONDUIT WITH PULL STRINGS AND JUNCTION BOXES FOR AUTOMATIC DETECTION FIRE ALARM SYSTEM AND NOTIFICATION PER NFPA 72.

2. MATERIALS
   ALL NEW COMPLYING WITH REQUIREMENTS OF CALIFORNIA ELECTRIC CODE AND NATIONAL FIRE PROTECTION ASSOCIATION.

A. ELECTRIC METALLIC TUBING – COUPLING AND FLEX CONDUIT GALVANIZED OR SHERARDIZED. EXTERIOR FLEX-GALV. STEEL WITH FACTORY APPLIED P.V.C. JACKET.

B. PANEL BOARDS – FLUSH MOUNTED.

C. CONDUCTORS – COPPER, INSULATED FOR 600 VOLTS, TYPE THHN FOR SIZES #12 TO #6, TYPE THW FOR LARGER SIZES. MINIMUM SIZE-#14.

D. RECEPTACLES – AS NOTED. +15" A.F.F. MIN. TO BOTTOM OF BOX

E. CLOCK RECEPTACLE – AS NOTED.

F. SWITCHES – AS NOTED. +48" A.F.F. MAX. TO TOP OF BOX

G. LIGHTING FIXTURES – AS NOTED ON THE DRAWINGS.

3. WORKMANSHIP
   MATERIALS AND EQUIPMENT INSTALLED IN A SECURE, NEAT, WORKMANLIKE MANNER IN ACCORDANCE WITH CODE REQUIREMENTS. PANEL BOARD CARDS SHALL BE FILLED OUT. CONDUIT AND CABLE INSTALLED IN WALL AND CEILING SPACES. WORK PIERCING WATERPROOFED AREAS FLASHED AND SEALED TO A WATERTIGHT CONDITION. BUILDING CONDUIT/WIRING FROM FACE OF BUILDING TO SITE TERMINATION BY SITE CONTRACTOR (N.I.C.). (FLEXIBLE CONDUIT S-BEND SEALTITE).

INSPECTION

INSPECTION OF PREFABRICATED BUILDINGS IS DIVIDED INTO TWO SEPARATE FUNCTIONS:

1. IN-PLANT INSPECTION.
2. ON-SITE INSPECTION.

THE CONTRACTOR SHALL ALLOW UP TO SEVEN (7) DAYS FROM THE DATE OF PLAN APPROVAL TO OBTAIN AN IN-PLANT INSPECTOR APPROVED BY D.S.A.

IN-PLANT INSPECTION AND MATERIAL TESTING SHALL BE ACCOMPLISHED UNDER THE SUPERVISION OF THE DISTRICT ARCHITECT. THE CONTRACTOR SHALL NOTIFY THE DISTRICT ARCHITECT, DSA, AND THE DESIGNATED INSPECTOR/INSPECTION AGENCY AT LEAST 48 HOURS PRIOR TO COMMENCING WORK. THE MANUFACTURER SHALL PROVIDE THE INSPECTOR WITH FULL ACCESS TO ALL PLANT OPERATIONS INVOLVING WORK UNDER THIS CONTRACT AND SHALL ADVISE THE INSPECTOR IN ADVANCE OF THE TIME AND PLACE OF OPERATIONS THAT THE INSPECTOR WANTS TO OBSERVE TAKE PLACE. BEFORE THE BUILDING(S) ARE REMOVED FROM THE PLANT FOR DELIVERY TO THE STORAGE FACILITY, OR FROM THE STORAGE FACILITY TO THE SITE, THE INSPECTOR SHALL DETERMINE THAT THEY ARE ACCEPTABLE AND ISSUE A WRITTEN RELEASE WHICH SHALL BE IN THE FORM OF A VERIFIED REPORT (FORM SSS-6).

A COPY OF THE INSPECTOR'S VERIFIED REPORT SHALL ACCOMPANY EACH BUILDING TO STORAGE OR TO THE SITE. THE INSPECTOR SHALL PUT ONE COPY IN EACH BUILDING.

AMS®
American Modular Systems
787 Spreckels Ave.Manteca, CA 95336
Phone (209) 825-1921 - Fax (209) 825-7018
americanmodular.com

MODULAR MANUFACTURER PROPRIETARY STATEMENT

THESE DRAWINGS AND THE MATERIAL CONTAINED THEREIN ARE THE PROPERTY OF AMERICAN MODULAR SYSTEMS, INC. (AMS) AND SHALL NOT BE REPRODUCED, COPIED OR OTHERWISE DISPOSED OF DIRECTLY OR INDIRECTLY AND SHALL NOT BE USED IN WHOLE OR IN PART TO ASSIST IN THE MAKING OF OR FOR THE PURPOSE OF FURNISHING ANY INFORMATION FOR THE MAKING OF DRAWINGS, PRINTS, APPARATUS OR PARTS THEREOF WITHOUT THE FULL KNOWLEDGE AND WRITTEN CONSENT OF AMS. ALL PATENTABLE MATERIAL CONTAINED HEREIN AND ORIGINATING WITH AMS SHALL BE THE SOLE PROPERTY OF AMS.

PRE-CHECKED SET NAME

24' x 40' THRU 120' x 40' BUILDINGS

SITE SPECIFIC PROJECT NAME

SHEET TITLE

GENERAL NOTES

MANUFACTURER PROFESSIONAL OF RECORD ON PC

LICENSED ARCHITECT – RANDALL PATRICK CAVANAGH – No. C12631 – Ren. 3-31-17 – STATE OF CALIFORNIA

REGISTERED PROFESSIONAL ENGINEER – MANNY D. FRIAS – No. S3380 – Exp.03/31/16 – STRUCTURAL – STATE OF CALIFORNIA

PROJECT SPECIFIC STATE AGENCY APPROVAL

IDENTIFICATION STAMP
DIV. OF THE STATE ARCHITECT
02 116495
AC TM FLS SS
DATE 12-18-2017

ORIGINAL PC STATE AGENCY APPROVAL

IDENTIFICATION STAMP
DIV. OF THE STATE ARCHITECT
CA. DEPT. OF GENERAL SERVICES
PC 02-113876
AC FLS SS
DATE 6/22/15

PRE-CHECK (PC) DOCUMENT – CODE: 2013 CBC
A SEPARATE PROJECT APPLICATION FOR CONSTRUCTION IS REQUIRED

REVISIONS

1	
2	
3	
4	

DRAWN BY:
SCALE: AS NOTED
DATE:

SHEET NUMBER

N1.0

COORDINATION OF WORK

THE CONTRACTOR IS RESPONSIBLE FOR MAKING ALL NECESSARY ARRANGEMENTS WITH THE SCHOOL DISTRICT AUTHORIZED REPRESENTATIVE FOR ACCESS TO GROUNDS AND REMOVAL OF EQUIPMENT, IF NECESSARY. THIS CONTACT SHALL BE MADE AT LEAST 48 HOURS PRIOR TO DELIVERY OF ANY MODULE. ON-SITE INSPECTION SHALL BE DONE BY THE SITE INSPECTOR. ALL WORK WHICH THE MANUFACTURER OR HIS SUBCONTRACTORS PERFORM AT THE SITE SHALL BE SUBJECT TO THE INSPECTION OF THE SITE INSPECTOR. THE MANUFACTURER WILL FURNISH THE SITE INSPECTOR WITH SUCH INFORMATION AS MAY BE NECESSARY TO KEEP HIM FULLY INFORMED AS TO PROGRESS OF WORK AND DATES WHEN SITE WORK WILL OCCUR. THE CONTRACTOR SHALL NOTIFY THE INSPECTION AGENCY AT LEAST 48 HOURS PRIOR TO COMMENCING WORK.

THE CONTRACTOR SHALL VERIFY THAT THE DISTRICT'S SITE IS READY TO RECEIVE THE CLASSROOM(S) PRIOR TO THE DELIVERY OF ANY CLASSROOM(S) BY VISITING EACH SITE (THIS MAY BE DONE BY THE INSPECTOR).

MATERIALS AND WORKMANSHIP

1. ALL CONTRACTORS SHALL CERTIFY THAT NO ASBESTOS-CONTAINING BUILDING MATERIALS WHICH EXCEED STATE AND FEDERAL MANDATED SAFE ASBESTOS LEVELS HAVE BEEN USED IN THE CONSTRUCTION OF RELOCATABLE FACILITIES.
2. ALL WORKMEN SHALL BE SKILLED AND QUALIFIED FOR THE WORK WHICH THEY PERFORM. ALL MATERIALS USED,UNLESS OTHERWISE SPECIFIED,SHALL BE NEW AND OF THE TYPES AND GRADES SPECIFIED. THE CONTRACTOR SHALL, IF REQUESTED, FURNISH EVIDENCE SATISFACTORY TO THE ARCHITECT THAT SUCH IS THE CASE.
3. CONTRACTOR'S CREWS ASSIGNED TO ANY WORK PERFORMED UNDER THIS CONTRACT SHALL INCLUDE ONE COMPETENT AND FULLY EXPERIENCED PERSON DESIGNATED AS THE RESPONSIBLE PERSON IN CHARGE. SUCH PERSON MUST BE IDENTIFIED BY NAME TO THE DISTRICT IN ADVANCE OF ANY WORK. UPON REQUEST, THE CONTRACTOR SHALL PROMPTLY FURNISH TO THE DISTRICT INFORMATION RELATING TO THIS EMPLOYEE'S EXPERIENCE.
4. WORKMANSHIP SHALL BE EQUAL OR BETTER IN QUALITY TO THAT REQUIRED BY THE CONSTRUCTION TRADES FOR A FINISHED PRODUCT. A QUALITY CONTROL SUPERVISOR, DESIGNATED BY THE MANUFACTURER, SHALL REVIEW ALL WORK IN PROGRESS AND SHALL REVIEW THE FINISHED BUILDING PRIOR TO FINAL INSPECTION TO ASSURE IT IS COMPLETE AND CORRECT. THE QUALITY CONTROL SUPERVISOR SHALL HAVE THE AUTHORITY TO HAVE MATERIALS REPLACED AND WORK REDONE IN ORDER TO CORRECT FAULTY MATERIALS OR WORKMANSHIP.

GENERAL DESIGN REQUIREMENTS

1. SO THAT TWO MODULES UP TO (10) APPROXIMATELY 12' x 40' MODULES DESIGNED MAY BE JOINED TOGETHER TO FORM A COMPLETE STRUCTURE TO MAINTAIN A POSITIVE ALIGNMENT OF FLOORS, WALLS, AND ROOF AND TO PERMIT SIMPLE NON-DESTRUCTIVE DETACHMENT FOR FUTURE RELOCATION.
2. EACH MODULE SHALL BE PERMANENTLY IDENTIFIED WITH (2) IMPRINTED (STAMPED NOT ENGRAVED) METAL IDENTIFICATION TAGS 3"x1-1/2" MINIMUM SIZE WITH THE FOLLOWING INFORMATION:
   A. MANUFACTURER'S NAME AND BUILDING SERIAL NUMBER.
   B. DESIGN WIND SPEED / EXPOSURE
   C. DESIGN SEISMIC S_S VALUE / SITE SEISMIC S_S VALUE
   D. DESIGN ROOF LIVE LOAD
   E. DESIGN FLOOR LIVE LOAD
   F. D.S.A. APPLICATION NUMBER
3. 2-TAGS PER MODULE: ONE ON EXTERIOR, AND ONE ON MODULE BEAM AT FRONT OF BUILDING ABOVE CEILING.
4. EACH MODULE SHALL BE CAPABLE OF RESISTING ALL VERTICAL AND LATERAL LOADS DURING TRANSPORTATION AND RELOCATION. (NORMAL INDUSTRY PRACTICE FOR BRACING MODULES DURING TRANSPORTATION AND RELOCATIONS IS ACCEPTABLE.) WHEN MODULES ARE ASSEMBLED JOINTS SHALL BE SEALED WITH REMOVABLE CLOSING STRIPS OR OTHER METHOD TO PRESENT A FINISHED APPEARANCE AND BE PERMANENTLY WATERPROOF.
5. EACH MODULE SHALL BE SUFFICIENTLY RIGID TO BE JACKED UP AT THE FRONT AND BACK CORNERS FOR RELOCATION WITHOUT DAMAGE OR THE MODULE SHALL HAVE LIFT LUGS AT FRONT AND BACK LOCATED AS REQUIRED SO THAT THE MODULE MAY BE JACKED UP FOR RELOCATION IN ONE PIECE WITHOUT ADDITIONAL SUPPORTS OF ANY TYPE. EVIDENCE OF EXCESSIVE BOWING DURING THE INSTALLATION OF THE MODULES WHICH, IN THE OPINION OF THE AGENCY ARCHITECT OR STRUCTURAL ENGINEER, CAUSES EXCESSIVE WORKING AT ANY JOINT OR COMPROMISES THE STRUCTURAL INTEGRITY OF THE MODULE SHALL BE SUFFICIENT REASON FOR REJECTION OF THE MODULE.
6. FINISH AND BASE MATERIALS AT EACH MODULE SHALL TERMINATE AT INTERIOR MODULE JOINTS IN A MANNER TO JOIN FLUSH AND TIGHT WITH SAME MATERIAL IN ADJACENT MODULE SO THE MODULE MAY BE RELOCATED WITH MINIMUM CUTTING AND PATCHING.

MARKERBOARD SPECIFICATIONS

MARKERBOARDS SHALL BE 24 GA. PORCELAIN STEEL FACING SHEET SUITABLE TO ACCEPT DRY ERASE FELT MARKERS. THE FACING SHEET SHALL BE LAMINATED TO PARTICLE BOARD SUBSTRATE WITH A MINIMUM DENSITY OF 45lbs./cu.ft. THE PANEL SHALL HAVE A FOIL BACKING. THE PANELS SHALL HAVE EXTRUDED ALUMINUM MOLDING AND CHALKRAIL WITH A MINIMUM OF 2 15/16" PROJECTION FROM THE FACE OF PANEL. THREE MAP HOOKS WITH CLIPS PER PANEL SHALL BE PROVIDED. ONE FLAG HOLDER, 1/2" SIZE, SHALL BE PROVIDED FOR EACH CLASSROOM. EACH CLASSROOM SHALL HAVE 2 EACH 4'x8' PANELS INSTALLED SIDE BY SIDE TO MAKE A 4'x16' PANEL, CENTERED ON THE WALL.

REFERENCE BRANDS: CHATFIELD-CLARKE Co, Inc. SERIES 500 OR NELSON ADAMS Co. NACO SERIES 60.

02-113876 - 24' x 40' - 120' x 40' EXPOSED STEEL

INTERIOR

1. FLOOR: CARPETS – CARPET PER STATE OF CALIFORNIA SPEC COMPLYING WITH GROUP 1 TYPE A, OR TYPE B CLASS 2, DENSITY 4600, DIRECT GLUE DOWN. (CARPET SHALL BE SECURELY ATTACHED, HAVE FIRM CUSHION, PAD OR BACKING OR NONE AT ALL AND HAVE A LEVEL LOOP, TEXTURED LOOP, LEVEL-CUT PILE OR LEVEL-CUT/UNCUT PILE TEXTURE. THE MAXIMUM PILE HEIGHT SHALL BE 1/2" INCH. CARPET EDGE TRIM SHALL COMPLY WITH SECTION 11B302.2) GROUP 1 TYPE A, CLASS 26. COLOR WILL BE SELECTED BY ARCHITECT AFTER AWARD OF BID. THE CARPET DENSITY SHALL BE 4600 MINIMUM. PILE YARN SHALL BE BRANDED NYLON. NO CROSS SEAMS SHALL BE ALLOWED. PILE HEIGHT 1/2" MAX.
2. BASE: RESILIENT COVE BASE – BEST QUALITY, MOULDED RUBBER, 1/8" THICK, 4" HIGH MOULDED TOP SET COVE. PROVIDE PREFORMED BASE FOR SQUARE EXTERNAL CORNERS AND PREFORMED END STOPS WHERE BASE DOES NOT ABUT. SOLID COLOR AS MANUFACTURE BY "JOHNSONITE CO.", FLEXCO, OR EQUAL. APPLY COVE TO COMPLETE PERIMETER OF CLASSROOM.
3. INTERIOR WALLS SHALL BE VINYL COVERED TACKBOARD (U.O.N.) APPLIED IN ONE CONTINUOUS LENGTH FROM FLOOR TO CEILING. THE TACKBOARD SHALL BE INDUSTRIAL INSULATION BOARD MANUFACTURED SPECIFICALLY AS A SUBSTITUTE FOR VINYL COVERED WALL PANELS. THE BOARD SHALL BE ASPHALT FREE, SHALL HAVE AN IRONED-ON COATING AND SHALL HAVE A MINIMUM DENSITY OF 18 LBS. PER FOOT. THE VINYL COATING SHALL BE MADE OF VIRGIN VINYL CALENDERED BASE COLOR, WEIGHING A MINIMUM OF 8 OZ. PER SQUARE YARD. THE COATING BACKING SHALL BE SHEETING OR NON-WOVEN FABRIC. THE VINYL COATING SHALL BE MECHANICALLY LAMINATED, WITH THE LONG EDGES WRAPPED, TO THE TACKBOARD. TACKBOARD SHALL BE APPLIED OVER 1/2" SHEETROCK OR OSB SHEATHING. THE VINYL WALL COVERED PANEL SHALL HAVE A CLASS III FLAME SPREAD RATING. THE PANEL SHALL BE APPROVED FOR CLASSROOM USE BY THE CALIFORNIA STATE FIRE MARSHAL. REFERENCE BRAND: VINYL COVERED TACKBOARD AS MANUFACTURED BY CHATFIELD-CLARKE OR COMPARABLE. CARE SHALL BE TAKEN IN MOUNTING THE TACKBOARD SO THAT THE TEXTURE OF ALL PANELS WILL HAVE THE SAME ORIENTATION AND COLOR MATCH.
4. CEILING: SUSPEND T-BAR SYSTEM, SEE SHEET M1.3 FOR DETAILS, MATERIALS AND INSTALLATION PER ASTM C 635, ASTM C636 AND IR 25-2.13 INCLUSIVE AS APPLICABLE TO CLASSROOMS. PANELS SHALL BE 5/8" MINIMUM THICK, MINERAL FIBERBOARD OR VINYL-FACED FIBERGLASS LAY-IN PANELS SQUARE EDGE ASTM FLAME SPREAD CLASS 1. LIGHT REFLECTION 75% MINIMUM. NOISE REDUCTION COEFFICIENT OF 0.65 MINIMUM. MAXIMUM SMOKE DENSITY NOT TO EXCEED 450.
5. THE INTERIOR ENVIRONMENT SHALL BE ASSEMBLED WITH PRODUCTS THAT CONTRIBUTE TO A HEALTHY INDOOR AIR QUALITY (IAQ). THE FOLLOWING SHALL COMPLY TITLE 24, PART 11 ("CAL-GREEN"), SECTION 5.504.4.

A. ADHESIVES, SEALANTS AND CAULKS	5.504.4.1
B. PAINTS AND COATINGS	5.504.4.3
C. AEROSOL PAINTS AND COATINGS	5.504.4.3.1
D. CARPET SYSTEMS	5.504.4.4
E. CARPET CUSHION	5.504.4.4.1
F. COMPOSITE WOOD PRODUCTS	5.504.4.5
G. RESILIENT FLOORING SYSTEMS	5.504.4.6
H. HVAC FILTER (MERV RATING OF 8+)	5.504.5.3.1

6. FLAME/SMOKE SPREAD:

WALL FINISH MATERIAL	PIPE INSULATION FLAME
FLAME SPREAD MAX = 200	SPREAD MAX = 25
SMOKE DENSITY MAX = 450	SMOKE DENSITY MAX = 450
BUILDING INSULATION FLAME	DUCT INSULATION FLAME
SPREAD MAX = 25	SPREAD MAX = 25
SMOKE DENSITY MAX = 450	SMOKE DENSITY MAX = 50

DOORS & WINDOWS

1. EXTERIOR DOORS: METAL DOORS – 3'-0"x7'-0" HOLLOW METAL DOOR CONSTRUCTION OF 1 SHEET OF 18 GA. GRADE II STEEL ASSEMBLED PER CS242 MINIMUM, AND REINFORCED WITH 20 GA. MINIMUM. FILL DOOR SPACES WITH MINERAL WOOL OR OTHER INSULATION. (REINFORCE BOTH FACES FOR CLOSURE.) PROVIDE FLUSH TOP ON DOORS. HARDWARE REINFORCEMENT SHALL BE 10 GA. MIN FOR HINGES, DOOR FRAME SHALL BE 16 GA. PRESSED STEEL FRAME ASTM A366 & C5242. HARDWARE REINFORCEMENT SHALL BE 10 GA. PLATE. FRAMES SHALL BE DESIGNED WITH INTEGRAL STOP AND TRIM. PROVIDE (3) ANCHORS PER JAMB PLUS ADJUSTABLE FLOOR ANCHOR. ROOMS WITH AN OCCUPANT LOAD OF FIVE OR MORE SHALL HAVE DOOR HARDWARE CAPABLE OF BEING LOCKED FROM THE INSIDE (PER CBC 1008.1.11).
2. EXTERIOR WINDOWS: PROVIDE ANODIZED ALUMINUM FRAME 5/8" MINIMUM DUAL PANE WINDOW UNITS, AS SHOWN ON FLOOR PLANS. THE 5/8" DIMENSION IS THE MINIMUM THICKNESS FOR THE DUAL GLAZED WINDOW PANEL CONSISTING OF TWO LITES OF GLASS AND THE AIR SPACE.
3. GLAZING MATERIAL SHALL BE: EXTERIOR LITE – 3/16" MINIMUM TEMPERED GLASS OR LAMINATED AS – 1 GLASS OF SOLAR GRAY GLARE REDUCING TYPE WITH A LIGHT TRANSMISSION FACTOR OF 45% MAXIMUM. INTERIOR LITE – 1/8" MINIMUM CLEAR TEMPERED. MINIMUM AIR SPACE SHALL BE 1/4" SPACE – BENT OR SEALED CORNER ALUMINUM WITH DESICCANT FILL SEALER – BUTYL PRIMARY SEAL AND POLYSULFIDE OR SILICONE SECONDARY SEAL. CERTIFICATION – ALL GLAZING TO BE CERTIFIED IN ACCORDANCE WITH ASTM E-773, E-774.
4. HEADER HEIGHT SHALL BE THE SAME AS THE DOOR. ALL OPERABLE SASH SHALL HAVE ALUMINUM SCREENS. WINDOWS SHALL NOT BE MOUNTED TO THE EXTERIOR OSB SURFACE. ALL WINDOWS SHALL MEET THE AAMA GS101-88 VOLUNTARY SPEC. FOR ALUMINUM PRIME WINDOWS AND SLIDING GLASS (ANS1), COMMERCIAL GRADE.

HARDWARE

1. EXTERIOR DOOR
   A. HINGES: HAGER 4-1/2" x 4-1/2" BUTTS, BB1279 US26D, 1-1/2 PAIR EACH DOOR WITH SET SCREW I BARREL AND BALL BEARING DESIGN, OR APPROVED EQUAL.
   B. EXTERIOR LOCKSET: SCHLAGE ND70PD, CORBIN, YALE OR EQUIVALENT. ALUM. FINISH. PANIC BARS/PULL HANDLE TYPE VON DUPRIN 22NL (PULL ON EXT.) OR CORBIN, YALE OR EQUIVALENT. ALUM. FINISH. PANIC BARS ARE ONLY REQUIRED WHERE THE OCCUPANT LOAD IS 50 OR MORE. ROOMS WITH AN OCCUPANT LOAD OF FIVE OR MORE SHALL HAVE DOOR HARDWARE CAPABLE OF BEING LOCKED FROM THE INSIDE (PER CBC 1008.1.11).
   C. CLOSER: NORTON 8500DA OR 8500BF SERIES, LCN 1460 DEL SERIES OR EQUAL.
   D. WEATHERSTRIPPING: ALL EXTERIOR DOORS SHALL BE WEATHERSTRIPPED WITH PEMKO 299D, ULTRA WS007 OR EQUAL, AT DOOR JAMBS AND HEAD.
   E. THRESHOLD: THRESHOLD SHALL BE PEMKO 271 AV 5" ALUMINUM WITH PEMKO 216 AV ULTRA TH042 DOOR BOTTOM.
   F. DOORSTOP: QUALITY #44, OR EQUAL. FLOOR STOPS @ 4" MAX FROM WALL.

HARDWARE continued

G. INTERIOR LOCKSET:

STUDENT TOILETS	INTERIOR PASSAGE COPPER CREEK 6220-PASSAGE w/ ADA LEVER OR 6231-RESTROOM w/ ADA LEVER
OFFICES	INTERIOR ENTRY/OFFICE COPPER CREEK 6241-ENTRY/OFFICE w/ ADA LEVER
CUSTODIAL	INTERIOR STOREROOM COPPER CREEK 6250-STOREROOM w/ ADA LEVER
PUBLIC TOILETS	EXTERIOR DOOR LOCKSET RHODES SCHLAGE ND95PD w/ LEVER

FIRE EXTINGUISHER

1. EACH CLASSROOM SHALL BE EQUIPPED WITH PRESSURE TYPE FIRE EXTINGUISHERS WITH 2A10BC UL RATING. MOUNT ON THE INTERIOR WALL OF THE BUILDING NEAR THE DOORWAY(S) AT A MAXIMUM HEIGHT OF 4 FEET TO THE TOP OF THE OPERATING HANDLE, AND THE BOTTOM OF F.E. MOUNTED 27" OR LESS A.F.F. FIRE EXTINGUISHERS SHALL BE TOTALLY CHARGED AND HAVE A DIAL INDICATING THE STATE OF CHARGE.

ACCESSIBILITY STANDARDS

REFERENCE: 2016 CALIFORNIA BUILDING CODE (TITLE 24, PART 2, CCR), CHAPTER 11B "ACCESSIBILITY TO PUBLIC..."

SECTION 11B-206.2 BUILDING ACCESSIBILITY, GENERAL
1. AT LEAST ONE ACCESSIBLE ROUTE SHALL CONNECT ALL BUILDINGS, ELEMENTS, AND AREAS, AND EACH FLOOR INCLUDING MEZZANINES.

SECTION 11B-208.1 PARKING SPACES REQUIRED
1. THE WORDS "NO PARKING", IN 12" MINIMUM HIGH WHITE LETTERS, SHALL BE PAINTED ON THE PAVEMENT WITHIN ALL PARKING ACCESS AISLES, READABLE FROM THE VEHICULAR WAY. VAN PARKING ACCESS AISLES SHALL BE PLACED ON THE PASSENGER SIDE OF THE VEHICLE. (SEE CBC SECTION 11B-502.3 FOR ACCESS AISLES.)
2. RAMPS MAY NOT ENCROACH INTO ANY REQUIRED ACCESS AISLE.
3. PARKING SPACE ACCESS AISLES SHALL NOT EXCEED 1:48 SLOPE IN ANY DIRECTION.
4. AT EXISTING SITES, ANY ROUTE WHICH EXCEEDS A 1:48 SLOPE MAY REQUIRE REMOVAL AND REDESIGN PER THE PATH OF TRAVEL (P.O.T.) PROVISIONS OF CBC SECTION 11B-202, IN ORDER TO APPROVE THE BUILDING PLACEMENT.

SECTION 11B-216 SIGNAGE
(ALSO REFER TO SECTIONS 11B-703, 1007.9, 1007.10, 1022.9)
SIGNAGE IS REQUIRED:
1. TO IDENTIFY PERMANENT ROOMS & SPACES
2. TO PROVIDE DIRECTIONS AND INFORMATION ABOUT SPACES & FACILITIES
3. TO IDENTIFY MEANS OF EGRESS
   A. AREAS OF REFUGE AND AREA FOR ASSISTED RESCUE (PER 1007.9 AND 1007.11)
   B. DIRECTIONS TO AN EXIT (PER 1007.10)
   C. DELAYED EGRESS LOCKS (PER 1008.1.9.7 ITEM 5 AND 5.1)
   D. EXIT WAYS (PER 1011.4)
      - AT EACH GRADE LEVEL EXTERIOR EXIT DOOR
      - AT AN EXIT BY MEANS OF A STAIRWAY OR RAMP ("EXIT STAIR DOWN" OR "EXIT RAMP DOWN")
      - AT AN EXIT ROUTE VIA ENCLOSURE, PASSAGEWAY, CORRIDOR, HALLWAY, ETC.
      - OTHER HORIZONTAL WAYS WHERE THE EXIT OR EXIT PATH IS NOT IMMEDIATELY VISIBLE (PER 1011.1)
4. TO IDENTIFY PARKING SPACES
5. TO IDENTIFY ENTRANCES OR ROUTE TO AN ACCESSIBLE ENTRANCE
6. TO IDENTIFY ELEVATORS
7. TO IDENTIFY TOILET ROOMS
8. TO IDENTIFY PUBLIC TELEPHONES, TTY and ASSISTIVE LISTENING SYSTEMS

SIGNS, WHERE LOCATED WITHIN AN ACCESSIBLE ROUTE, MOUNTED LESS THAN 80" ABOVE THE FINISHED FLOOR, MUST HAVE ROUNDED EDGES OR AN EASED RADIUS MINIMUM OF 0.125".

SECTION 11B-404.2.8 DOOR CLOSING SPEED
1. THE SWEEP PERIOD OF ACCESSIBLE DOORS SHALL BE 5 SECONDS MINIMUM, FROM AN OPEN DOOR POSITION OF 90 DEGREES, TO A DOOR POSITION OF 12" FROM THE LATCH.

SECTION 11B-404.2.9 DOOR OPENING FORCE
1. THE EFFORT TO OPEN ANY DOOR SHALL NOT EXCEED 5LBS, EXCEPT FIRE DOORS, WHICH SHALL NOT EXCEED 15LBS FORCE.

SECTIONS 11B-404.2.4.3 RECESSED DOORS
1. DOORS RECESSED 8" OR MORE SHALL HAVE STRIKE EDGE CLEARANCES IN ACCORDANCE WITH FIGURE 11B-404.2.4.3.

SECTION 11B-405.5 RAMP WIDTH
1. THE CLEAR WIDTH OF A RAMP SHALL BE 48" MINIMUM.

SECTION 11B-505 HANDRAILS
1. THE TOP OF THE GRIPPING SURFACE OF HANDRAILS SHALL BE BETWEEN 34" AND 38", MEASURED VERTICALLY FROM WALKING SURFACES AND STAIR NOSINGS.
2. HANDRAILS SHALL HAVE AT LEAST 1-1/2" CLEARANCE ALL AROUND.
3. HANDRAILS SHALL EXTEND BEYOND, AND IN THE SAME DIRECTION, OF STAIRS AND RAMPS.

SECTION 11B-608.5 WATER CONTROLS
1. CONTROLS TO OPERATE A WATER FAUCET OR OUTLET SHALL BE A SINGLE-LEVER DESIGN, CAPABLE OF BEING OPERATED WITH A SINGLE HAND, AND SHALL NOT REQUIRE TIGHT GRASPING, PINCHING, OR TWISTING OF THE WRIST.
2. THE FORCE REQUIRED TO OPERATE CONTROLS SHALL NOT EXCEED 5 LBS.

SECTION 11B-604 TOILET ROOMS AND BATHING ROOMS
1. AN ACCESSIBLE TOILET STALL SHALL HAVE A MINIMUM WIDTH OF 60" AND SHALL BE EQUIPPED WITH A DOOR THAT HAS AN AUTOMATIC-CLOSING DEVICE, AND SHALL HAVE A CLEAR, UNOBSTRUCTED OPENING WIDTH OF 32 INCHES WHEN LOCATED AT THE END AND 34 INCHES WHEN LOCATED AT THE SIDE, WITH THE DOOR POSITIONED AT AN ANGLE OF 90 DEGREES FROM ITS CLOSED POSITION.
2. THE INSIDE AND OUTSIDE OF THE ACCESSIBLE COMPARTMENT DOOR SHALL BE EQUIPPED WITH A LOOP OR U-SHAPED HANDLE IMMEDIATELY BELOW THE LATCH. THE LATCH SHALL BE FLIP-OVER STYLE, SLIDING OR OTHER HARDWARE NOT REQUIRING THE USER TO GRASP OR TWIST.
3. EXCEPT FOR DOOR-OPENING WIDTHS AND DOOR SWINGS, A CLEAR, UNOBSTRUCTED ACCESS OF NOT LESS THAN 44 INCHES SHALL BE PROVIDED TO THE WATER CLOSET COMPARTMENTS DESIGNED FOR USE BY PERSONS WITH DISABILITIES.
4. A 27"-29" MINIMUM DIMENSION IS REQUIRED FOR LAVATORY/SINK KNEE CLEARANCE, WHICH IS THE DISTANCE FROM THE FINISH FLOOR TO THE UNDERSIDE OF THE LAVATORY/SINK. (SEE 4/P2.0)
5. TABLE 11B-604.9 SUGGESTS DIMENSIONS FOR CHILDREN'S USE.

LIGHT GAUGE METAL STUDS & COLD FORMED STEEL

1. ALL LIGHT GAUGE METAL STUDS & COLD FORMED STEEL SHALL BE FORMED FROM STEEL THAT CORRESPONDS TO THE MINIMUM REQUIREMENTS OF THE 2010 AISI/COS/ANSI.
2. ALL GALVANIZED STUDS, JOISTS, TRACK, BRIDGING AND ACCESSORIES SHALL BE FORMED FROM STEEL HAVING A GALVANIZED COATING MEETING THE REQUIREMENTS OF ASTM A653.
3. CUSTOM FORMED SHAPES SHALL BE BENT FROM ASTM A1011 STEEL SHEETS.
4. STUD AND TRACK DESIGNATIONS ARE BASED ON STEEL STUD MANUFACTURERS ASSOCIATION. ICC-ES EVALUATION REPORT ESR-3064P.
5. GALVANIZED FRAMING PRODUCTS SHALL BE COATED IN ACCORDANCE WITH REQUIREMENTS OF ASTM A653. PRODUCTS WILL BE FURNISHED WITH A G-60 OR EQUIVALENT COATING IF SPECIFIED, AND SHALL BE IN CONFORMANCE WITH ASTM C-955, OTHERWISE, G-40 OR EQUIVALENT COATING WILL BE PROVIDED.

SCREWS FOR STEEL TO STEEL CONNECTIONS

1. SCREWS FOR STEEL TO STEEL CONNECTIONS SHALL BE TEKS PER ICC ESR-1976 OR TEKS SELECT PER ICC ESR-3223 BY ITW BUILDEX, U.O.N.
   A. HEAD TYPE AS REQUIRED FOR APPLICATION.

METAL FLOOR DECK

1. SECTION PROPERTIES SHALL BE DERIVED IN ACCORDANCE WITH AISI, "SPECIFICATION FOR DESIGN OF COLD-FORMED STEEL STRUCTURAL MEMBERS, LATEST EDITION."
2. METAL DECKING IS TO BE ATTACHED TO THE STRUCTURAL FRAME IN CONFORMANCE WITH AWS D1.1 AND D1.3, "SPECIFICATION FOR WELDING SHEET STEEL IN STRUCTURES."
3. ASTM REFERENCE NUMBERS: A) ASTM A653, STEEL SHEET, ZINC-COATED (GALVANIZED) OR ZINC-IRON ALLOY-COATED (GALVANEALED) BY THE HOT-DIP PROCESS STRUCTURAL (PHYSICAL) QUALITY.
4. STEEL DECK INSTITUTE (SDI)-METAL FLOOR DECK PROFILES SHALL BE IN CONFORMANCE WITH SDI STANDARDS.
5. METAL FLOOR DECK TO BE ASC STEEL DECK:
   A. B-36, 18 GAUGE, 1½" DEEP x 36" WIDE
   B. H-24, 18 GAUGE, 3" DEEP x 24" WIDE
   C. 3-W, 18 GAUGE, 3" DEEP x 36" WIDE
6. DECK UNITS ARE TO BE FABRICATED FROM SHEET STEEL CONFORMING TO ASTM A653, Fy=38 KSI WITH A GALVANIZED COATING, G-60 OR G-90.

ABBREVIATION LEGEND

A	ACCESSIBLE
AC	ASPHALT CONCRETE
A/C	AIR CONDITIONING
ACI	AMERICAN CONCRETE INSTITUTE
ACOUS	ACOUSTICAL
ADD	ADDENDUM
ADD'L	ADDITIONAL
ADJ	ADJUSTABLE OR ADJACENT
AISC	AMERICAN INSTITUTE OF STEEL CONSTRUCTION
AISI	AMERICAN IRON AND STEEL INSTITUTE
ALT	ALTERNATE
ALUM	ALUMINUM
ANSI	AMERICAN NATIONAL STANDARDS INSTITUTE
ARCH	ARCHITECT (URAL)
ASTM	AMERICAN SOCIETY FOR TESTING AND MATERIALS
AWC	AMERICAN WOOD COUNCIL
AWPA	AMERICAN WOOD PROTECTION ASSOCIATION
AWS	AMERICAN WELDING SOCIETY
BD	BOARD
BLDG	BUILDING
BLK	BLOCK
BLKG	BLOCKING
BLW	BELOW
BM	BEAM
BN	BOUNDARY NAILING
BOT/BOTT	BOTTOM
BTWN	BETWEEN
BUR	BUILT UP ROOFING
C	CARPET
CAB	CABINET
CB	CATCH BASIN
CBC	CALIFORNIA BUILDING CODE
CCR	CALIFORNIA CODE OF REGULATIONS
CEM	CEMENT
CF	CUBIC FOOT
CJ	CONTROL JOINT
CJP	COMPLETE JOINT PENETRATION
CLG	CEILING
CLR	CLEAR
CT	CERAMIC MOSAIC TILE
CMU	CONCRETE MASONRY UNIT
CO	CLEAN OUT
COL	COLUMN
CONC	CONCRETE
CONN	CONNECTION
CONT	CONTINUOUS
CSK	COUNTERSINK
CTRD	CENTERED
CW	COLD WATER
DBL	DOUBLE
DET	DETAIL
DF	DRINKING FOUNTAIN OR DOUGLAS FIR
DIA	DIAMETER
DIAG	DIAGONAL
DIM	DIMENSION
DIV	DIVISION
DR	DOOR
DS	DOWNSPOUT
DSA	DIVISION OF THE STATE ARCHITECT
DWG	DRAWING
E	ENAMEL
(E)	EXISTING
EA	EACH
EJ	EXPANSION JOINT
ELEV	ELEVATION
ELECT	ELECTRICAL
EMBED	EMBEDMENT
EMT	ELECTRICAL MAGNETIC TUBING
EN	EDGE NAILING
ETC	ET CETERA
EQ	EQUAL
EW	EACH WAY
EXP	EXPOSURE
EXT	EXTERIOR
F	FAHRENHEIT
(F)	FUTURE
FAB	FABRICATION
FAC	FACTORY
FD	FLOOR DRAIN
FF	FINISHED FLOOR
FHWS	FLAT HEAD WOOD SCREW
FIN	FINISH
FLR	FLOOR
FLSHG	FLASHING
FN	FIELD NAILING
FND/FNDN	FOUNDATION
FOF	FACE OF FINISH
FOP	FACE OF PLYWOOD
FOS	FACE OF STUD
FRP	FIBERGLASS REINFORCED PLASTIC PANELS
FT	FOOT
FTG	FOOTING
FURR	FURRED (-ING)
GA	GAUGE
GB	GYPSUM BOARD
GL	GLASS OR GLAZING
GLV/GALV	GALVANIZED
GSM	GALVANIZED SHEET METAL
GYP	GYPSUM
HB	HOSE BIBB
HC	HOLLOW CORE
HDR	HEADER
HDW	HARDWOOD
HF	HEM FIR
HM	HOLLOW METAL (STEEL)
HOR/HORIZ	HORIZONTAL
HSS	HOLLOW STRUCTURAL SECTION (STEEL)
HT	HEIGHT
HVAC	HEATING VENTILATING AIR CONDITIONING
HW	HOT WATER
IAPMO	INTERNATIONAL ASSOCIATION OF PLUMBING AND MECHANICAL OFFICIALS
ICC	INTERNATIONAL CODE COUNCIL
ID	INSIDE DIAMETER
IN	INCH
INSUL	INSULATE (D), (ION)
INT	INTERIOR
INV	INVERT
IR	INTERPRETATION OF REGULATIONS
JT	JOINT
KSI	KIPS PER SQUARE INCH (KIPS = 1,000LBS)
LAM	LAMINATE(D)
LAV	LAVATORY
LB, LBS	POUND
LLH	LONG LEG HORIZONTAL
LLV	LONG LEG VERTICAL
LNDG	LANDING
LONG	LONGITUDINAL
LS	LAG SCREW
LT	LIGHT
LW	LIGHT WEIGHT
LWC	LIGHT WEIGHT CONCRETE
MATL	MATERIAL
MAX	MAXIMUM
MB	MECHANICAL BOLT
MECH	MECHANICAL
MFG	MANUFACTURING
MFR	MANUFACTURER
MIN	MINIMUM
MIR	MIRROR
MISC	MISCELLANEOUS
MM	MILLIMETER
MTL	METAL
(N)	NEW
NIC	NOT IN CONTRACT
NDS	NATIONAL DESIGN SPECIFICATION
NW	NORMAL WEIGHT
NWC	NORMAL WEIGHT CONCRETE
O/	OVER
OC	ON CENTER
OD	OUTSIDE DIAMETER
OH	OPPOSITE HAND OR OVERHANG
OPG	OPENING
OPP	OPPOSITE
OSB	ORIENTED STRAND BOARD
PL	PROPERTY LINE
PLAM	PLASTIC LAMINATE
PLAS	PLASTER
PLF	POUNDS PER LINEAR FOOT
PLT	PLATE
PLWD/PLY	PLYWOOD
PNL	PANEL
POC	POINT OF CONNECTION
PS	PRODUCT STANDARD
PSF	POUNDS PER SQUARE FOOT
PSI	POUNDS PER SQUARE INCH
PT	PRESSURE TREATED
PTDF	PRESERVATIVE TREATED DOUGLAS FIR
PTN	PARTITION
PVC	POLYVINYL CHLORIDE
R	RISER
RD	ROOF DRAIN
REF	REFERENCE
REFR	REFRIGERATOR
REINF	REINFORCING
REQ'D/REQ	REQUIRED
RES	RESILIENT
RDWD	REDWOOD
RWL	RAIN WATER LEADER
SCH/SCHED	SCHEDULE
SD	STORM DRAIN
SDSTS	SELF DRILLING SELF TAPPING SCREW
SEC	SECTION
SEP	SEPARATION
SF	SQUARE FEET
SHT	SHEET
SHTG	SHEETING
SIM	SIMILAR
SMS	SHEET METAL SCREW
SP	STRUCTURAL PLYWOOD
SPEC	SPECIFICATIONS
SQ	SQUARE
SS	STAINLESS STEEL
STAGG	STAGGERED
STN	STAIN
STD	STANDARD
STL	STEEL
STS	SELF TAPPING SCREW
STSMS	SELF TAPPING SHEET METAL SCREW
T&B	TOP AND BOTTOM
T&G	TONGUE AND GROOVE
TEMP	TEMPERED
THRU	THROUGH
TJ	TOOL JOINT
TOC	TOP OF CURB, CRICKET, OR CONCRETE
TOP	TOP OF PARAPET
TOS	TOP OF SLAB, SHEATHING, OR STEEL
TOW	TOP OF WALL
TRANS	TRANSVERSE
TS	TOP OF SHEATHING
TV	TELEVISION
TYP	TYPICAL
UON	UNLESS OTHERWISE NOTED
UNO	UNLESS NOTED OTHERWISE
VAR	VARIES
VCT	VINYL COMPOSITION TILE
VCTB	VINYL COVERED TACKBOARD
VERT	VERTICAL
VFY	VERIFY
VIF	VERIFY IN FIELD
VWC	VINYL WALL COVERING
W/	WITH
WD	WOOD
WF	WIDE FLANGE
WIN	WINDOW
W/O	WITHOUT
WS	WOODSCREW
WSCT	WAINSCOT
WT	WEIGHT
WWF	WELDED WIRE FABRIC
∠	ANGLE
@	AT
℄	CENTER LINE
ø	DIAMETER
°	DEGREES
ML	MODULE LINE
±	PLUS/MINUS

AMS American Modular Systems
787 Spreckels Ave.Manteca, CA 95336
Phone (209) 825-1921 - Fax (209) 825-7018
americanmodular.com

MODULAR MANUFACTURER PROPRIETARY STATEMENT

THESE DRAWINGS AND THE MATERIAL CONTAINED THEREIN ARE THE PROPERTY OF AMERICAN MODULAR SYSTEMS, INC. (AMS) AND SHALL NOT BE REPRODUCED, COPIED OR OTHERWISE DISPOSED OF DIRECTLY OR INDIRECTLY AND SHALL NOT BE USED IN WHOLE OR IN PART TO ASSIST IN THE MAKING OF OR FOR THE PURPOSE OF FURNISHING ANY INFORMATION FOR THE MAKING OF DRAWINGS, PRINTS, APPARATUS OR PARTS THEREOF WITHOUT THE FULL KNOWLEDGE AND WRITTEN CONSENT OF AMS. ALL PATENTABLE MATERIAL CONTAINED HEREIN AND ORIGINATING WITH AMS SHALL BE THE SOLE PROPERTY OF AMS.

PRE-CHECKED SET NAME

24' x 40' THRU 120' x 40' BUILDINGS

SITE SPECIFIC PROJECT NAME

SHEET TITLE

GENERAL NOTES

MANUFACTURER PROFESSIONAL OF RECORD ON PC

LICENSED ARCHITECT — RANDALL PATRICK CAVANAGH — No. C12631 — Ren. 3-31-17 — STATE OF CALIFORNIA

REGISTERED PROFESSIONAL ENGINEER — MANNY D. FRANCO — No. S3380 — Exp. 03/31/16 — STRUCTURAL — STATE OF CALIFORNIA

PROJECT SPECIFIC STATE AGENCY APPROVAL

IDENTIFICATION STAMP
DIV. OF THE STATE ARCHITECT
02 116495
AC TM
DATE 12-18-2017

ORIGINAL PC STATE AGENCY APPROVAL

IDENTIFICATION STAMP
DIV. OF THE STATE ARCHITECT
CA. DEPT. OF GENERAL SERVICES
PC 02-113876
AC FLS SS
DATE 6/22/15

PRE-CHECK (PC) DOCUMENT – CODE: 2013 CBC
A SEPARATE PROJECT APPLICATION FOR CONSTRUCTION IS REQUIRED

REVISIONS

1	
2	
3	
4	

DRAWN BY:
SCALE: AS NOTED
DATE:

SHEET NUMBER

N2.0

DOOR SCHEDULE

DOOR NO.	DOOR TYPE	DOOR SIZE	QUANTITY	MATERIAL	FINISH	HARDWARE SET NO.	FRAME TYPE	FRAME MATERIAL	FRAME FINISH	REMARKS
1	D1B	3'–0" x 7'–0"	1	HM	PT	A	F1A	STL	PT	HARDWARE LOCKABLE FROM THE INSIDE, SEE DOOR NOTE #3
2	D1A	3'–0" x 7'–0"	1	HM	PT	A	F1B	STL	PT	HARDWARE LOCKABLE FROM THE INSIDE, SEE DOOR NOTE #3
3	D2	3'–0" x 7'–0"	1	HM	PT	A	F2	STL	PT	

DOOR ABBREVIATIONS

HM – HOLLOW METAL
AL – ALUMINUM
S – STEEL
SST – STAINLESS STEEL
STL – STEEL FRAME, 16ga. FULLY WELDED
WWF – WINDOW WALL FRAME
SC – SOLID CORE WOOD
HC – HOLLOW CORE WOOD
PT – PAINTED
CA – CLEAR ANODIZED
BR – BRONZE ANODIZED
CLR – CLEAR FINISH
TM – TIMELY – BROWNTONE

DOOR NOTES

1. DOORS SHALL COMPLY WITH C.B.C. SECTION 1008.
2. CLASSROOMS ≥ 1000 S.F WILL REQUIRE PANIC HARDWARE THAT COMPLIES WITH C.B.C. SECTION 1008.1.10.
3. PER C.B.C. 1008.1.11: PROVIDE LOCKS THAT ALLOW DOORS TO CLASSROOMS AND ANY ROOM WITH AN OCCUPANCY OF FIVE OR MORE PERSONS TO BE LOCKED FROM THE INSIDE. LOCKS SHALL COMPLY WITH C.B.C. SECTION 1008.1.9.

WINDOW SCHEDULE

WINDOW TYPE	FUNCTION	QTY.	'W' WIDTH	'H' HEIGHT	FINISH	GLASS TYPE	U FACTOR	SHGC	VT MIN	MIN STC RATING	REMARKS
A	FIXED	1	6''–0"	6'–9"	CLEAR ALUMINUM	SOLAR GREY	0.780	0.430	0.37	27	INOPERABLE
B	FIXED	1	6''–0"	6'–9"	CLEAR ALUMINUM	SOLAR GREY	0.780	0.430	0.37	27	INOPERABLE

EXTERIOR LITE – 3/16" MINIMUM TEMPERED GLASS, OR LAMINATED AS 1 GLASS OF SOLAR GRAY GLARE REDUCING TYPE WITH A LIGHT TRANSMISSION FACTOR OF 45% MAXIMUM.

ROOM FINISHES SCHEDULE

ROOM NUMBER	ROOM NAME	FINISHES: FLOOR	BASE	WALLS: FRONT	REAR	RIGHT	LEFT	CEILING	CEILING HEIGHT	REMARKS
301	OFFICE	A	D	F	F	F	F	K	9'–0"	
302	OFFICE	A	D	F	F	F	F	K	9'–0"	
303	WOMEN	B	E	J	J	J	J	G	8'–6"	
304	MEN	B	E	J	J	J	J	G	8'–6"	
305	UNISEX	B	E	J	J	J	J	G	8'–6"	

FINISH INDICATORS

A – CARPET TILE PER STATE OF CALIF SPEC COMPLYING WITH GROUP 1, TYPE A OR TYPE B, CLASS 2, DENSITY 4600, DIRECT GLUE DOWN.
B – VINYL SHEET FLOORING, 0.6 MIN, C.D.F. PER ASTM D 2047
C – VCT ARMSTRONG, STANDARD, OR EXCELON
D – TOP SET BASE. 4"
E – TOP SET BASE. 6"
F – WALL FINISH. 1/2" VINYL TACKBOARD CLASS 1 OVER 1/2" GYP BOARD BACKING
G – 1/2" GYP BOARD. TAPE, PAINTED FINISH
H – 1/2" GYP BOARD. TAPE, PAINTED FINISH
J – 3/32" F.R.P. OVER 1/2" W.R. GYP BOARD
K – ACOUSTICAL LAY IN GRID CEILING PANELS 2'x2' OR 2'x4'
L – 1/2" VINYL TACKBOARD CLASS 1 OVER 5/8" TYPE "X" GYP BOARD BACKING
M – 5/8" TYPE 'X' GYP BOARD. TAPE, TEXTURE, PAINTED FINISH
N – CERAMIC TILE – (FULL HEIGHT AT WALLS)
O – EXPOSED CONCRETE WITH CONCRETE SEALER
P – CLOUD CEILING PANELS
Q – 2x4 CEILING TILE w/ VINYL COATING

DOOR TYPES

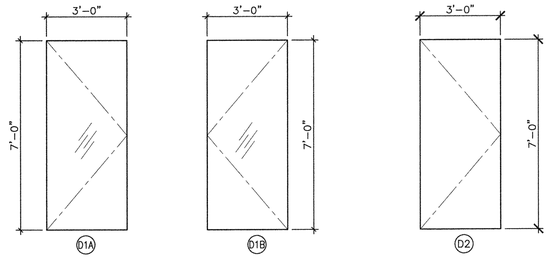

HOLLOW METAL

WINDOW TYPES

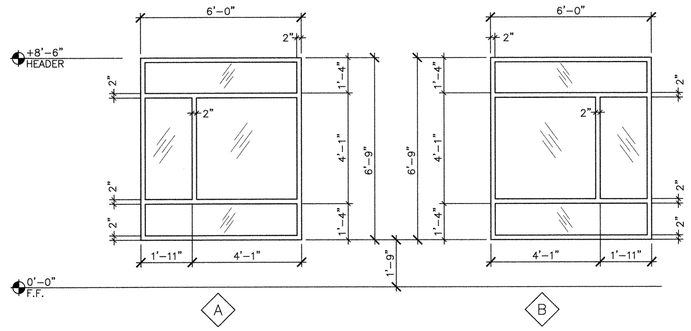

DOOR FRAME TYPES

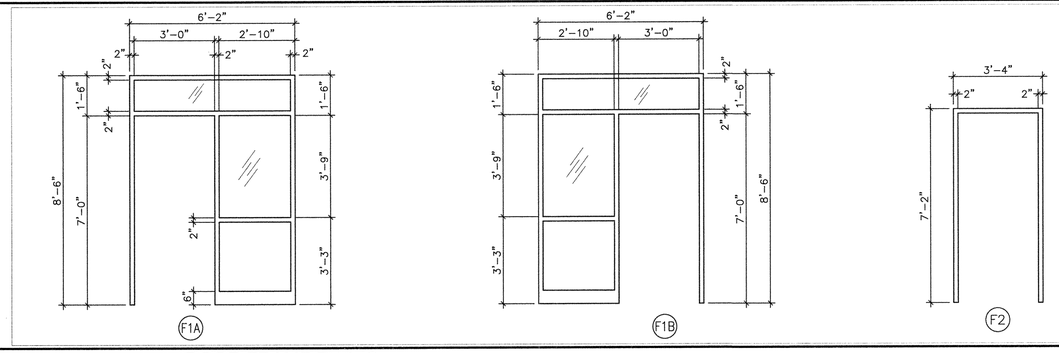

DOOR HARDWARE SCHEDULE

A	EXTERIOR DOOR LOCKSET w/ LEVER RHODES SCHLAGE ND95PD
B	EXTERIOR DOOR LOCKSET W/ LEVER RHODES SCHLAGE ND70PD
C	~~INTERIOR PASSAGE COPPER CREEK 6220–PASSAGE w/ADA LEVER~~
D	~~INTERIOR RESTROOM COPPER CREEK 6231 RESTROOM w/ADA LEVER~~
E	~~INTERIOR ENTRY/OFFICE COPPER CREEK 6241–ENTRY/OFFICE w/~~ADA LEVER
F	~~INTERIOR STOREROOM COPPER CREEK 6250–STOREROOM w/ADA~~ LEVER
G	~~INTERIOR CLASSROOM COPPER CREEK 6260–CLASSROOM w/~~ADA LEVER

EXTERIOR DOOR HARDWARE

1. HINGES: PEMKO CFS83HD (CONTINUOUS HINGES)
2. CLOSER: LCN 4041 EDA X NHO OR EQUAL. (5 LBS. MAX PRESSURE)
3. WEATHERSTRIPPING: ALL EXTERIOR DOORS SHALL BE WEATHERSTRIPPED WITH PEMKO 299D, ULTRA WS007 OR EQUAL, AT DOOR JAMBS AND HEAD.
4. THRESHOLD: THRESHOLD SHALL BE PEMKO 271 AV 5" ALUMINUM WITH PEMKO 216 AV ULTRA TH042 DOOR BOTTOM.
5. LOCKDOWN: INTERIOR TEACHERS' MANUAL LOCK FOR CAMPUS LOCK DOWN CRITERIA – REQUIRED FOR STATE–FUNDED SCHOOLS, PER EDUCATION CODE SECTION 17075.50 (AND ALSO CBC 1008.1.11): PROVIDE LOCKS THAT ALLOW DOORS TO CLASSROOMS AND ANY ROOM WITH AN OCCUPANCY OF FIVE OR MORE PERSONS TO BE LOCKED FROM THE INSIDE. LOCKS SHALL COMPLY WITH C.B.C. SECTION 1008.1.9.

*ADDITIONAL DOORS MAY BE REQUIRED BASED ON BUILDING LAYOUT.

NOT USED

NOT USED

American Modular Systems
787 Spreckels Ave. Manteca, CA 95336
Phone (209) 825-1921 - Fax (209) 825-7018
americanmodular.com

MODULAR MANUFACTURER PROPRIETARY STATEMENT

THESE DRAWINGS AND THE MATERIAL CONTAINED THEREIN ARE THE PROPERTY OF AMERICAN MODULAR SYSTEMS, INC. (AMS) AND SHALL NOT BE REPRODUCED, COPIED OR OTHERWISE DISPOSED OF DIRECTLY OR INDIRECTLY AND SHALL NOT BE USED IN WHOLE OR IN PART TO ASSIST IN THE MAKING OF OR FOR THE PURPOSE OF FURNISHING ANY INFORMATION FOR THE MAKING OF DRAWINGS, PRINTS, APPARATUS OR PARTS THEREOF WITHOUT THE FULL KNOWLEDGE AND WRITTEN CONSENT OF AMS. ALL PATENTABLE MATERIAL CONTAINED HEREIN AND ORIGINATING WITH AMS SHALL BE THE SOLE PROPERTY OF AMS.

PRE–CHECKED SET NAME

24' x 40' THRU 120' x 40' BUILDINGS

SITE SPECIFIC PROJECT NAME

MARIN COMMUNITY CSD - INDIAN VALLEY CAMPUS (1) 24x40 BUILDING

SHEET TITLE

SCHEDULES

MANUFACTURER PROFESSIONAL OF RECORD ON PC

LICENSED ARCHITECT
TIMOTHY PATRICK GUNNOE
No. C12631
Ren. 3-31-19
STATE OF CALIFORNIA

PROJECT SPECIFIC STATE AGENCY APPROVAL

STATE AGENCY APPROVAL

IDENTIFICATION STAMP
DIV. OF THE STATE ARCHITECT
02 116495
AC
DATE 12-18-2017

BASED ON PC# 02-113876

PRE–CHECK (PC) DOCUMENT – CODE: 2013 CBC
A SEPARATE PROJECT APPLICATION FOR CONSTRUCTION IS REQUIRED

REVISIONS

1
2
3
4

DRAWN BY:	BA
SCALE:	AS NOTED
DATE:	11/10/17

SHEET NUMBER

N3.0

02-113876 - 24' - 40' - 120' - 40' EXPOSED SIDES - SHEET - 7/27/2017 1:45 PM - DWG TITLE - 11/7/2017 1:43 PM

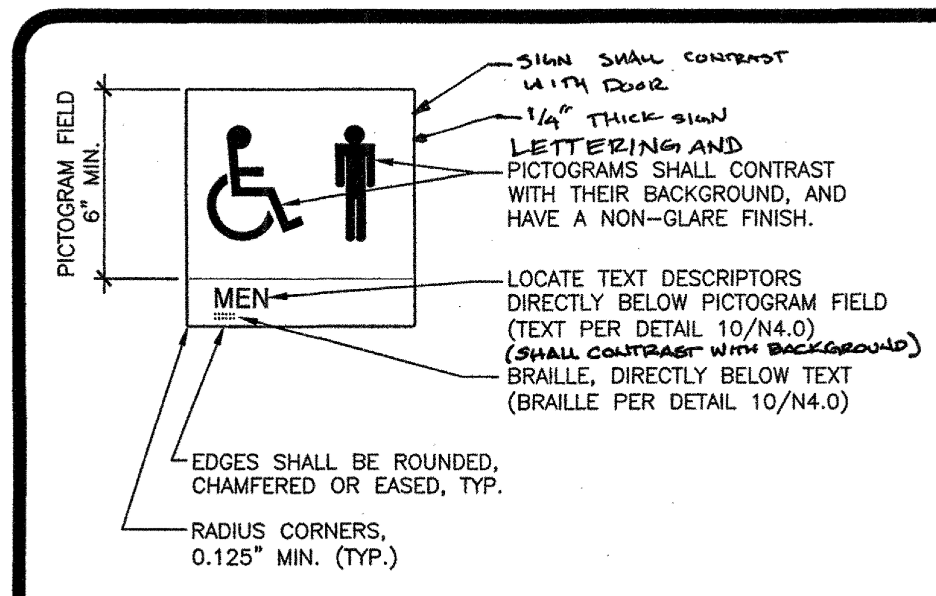

NOTES:
1. ATTACH SIGNS USING ADHESIVE OR MIN. (2) TWO FLATHEAD COUNTERSUNK SCREWS, COMPATIBLE WITH WALL MATERIAL.
2. LOCATE PER DETAIL 4/N4.0
3. SIGNS ARE NOT IN MODULAR MFR. SCOPE OF WORK.

WALL MOUNTED RESTROOM SYMBOLS — NOT TO SCALE — 1

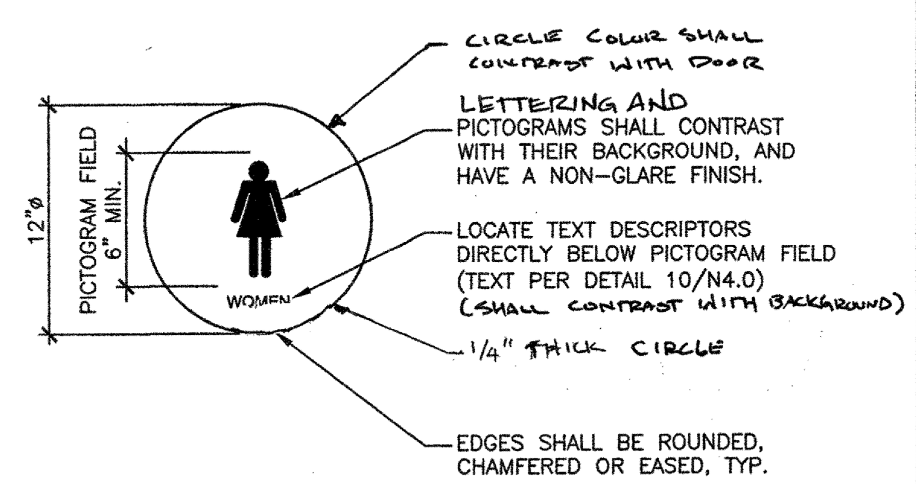

NOTES:
1. ATTACH SIGNS USING ADHESIVE OR MIN. (2) TWO FLATHEAD COUNTERSUNK SCREWS, COMPATIBLE WITH DOOR MATERIAL.
2. LOCATE PER DETAIL 4/N4.0
3. SIGNS ARE NOT IN MODULAR MFR. SCOPE OF WORK.

DOOR MOUNTED RESTROOM SYMBOLS — NOT TO SCALE — 2

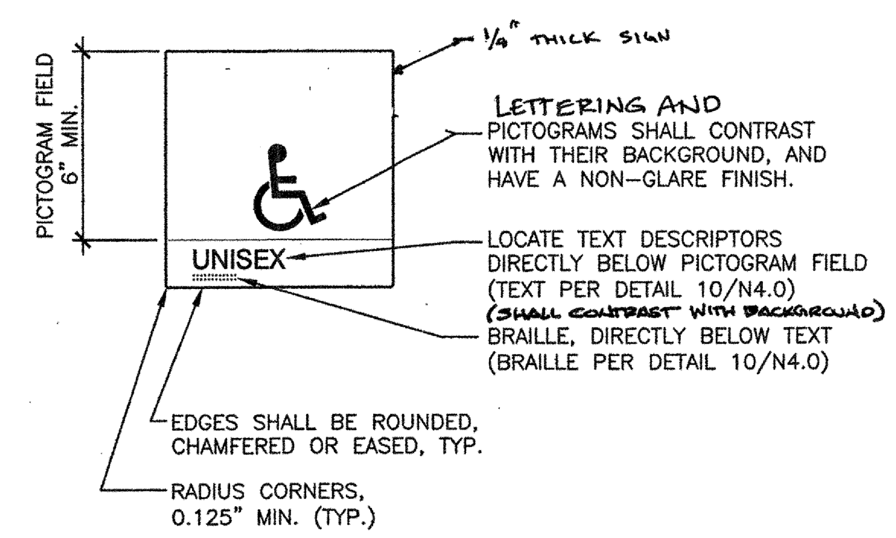

NOTES:
1. ATTACH SIGNS USING ADHESIVE OR MIN. (2) TWO FLATHEAD COUNTERSUNK SCREWS, COMPATIBLE WITH WALL MATERIAL.
2. LOCATE PER DETAIL 4/N4.0
3. SIGNS ARE NOT IN MODULAR MFR. SCOPE OF WORK.

- — NOT TO SCALE — 3

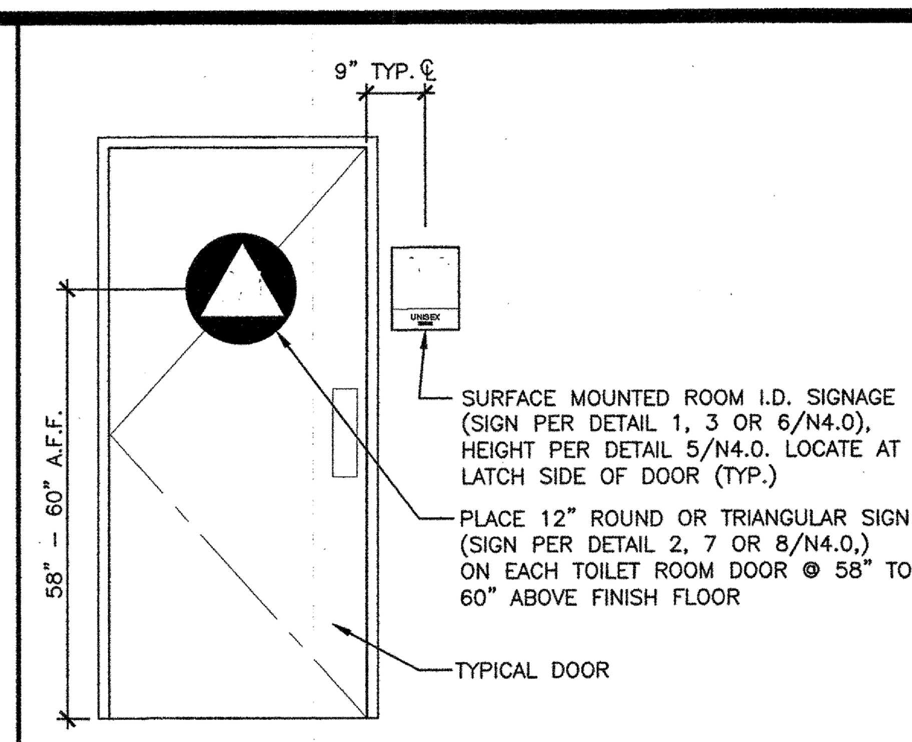

NOTE:
SIGNS ARE NOT IN MODULAR MFR. SCOPE OF WORK.

ROOM IDENTIFICATION SIGNAGE — NOT TO SCALE — 4

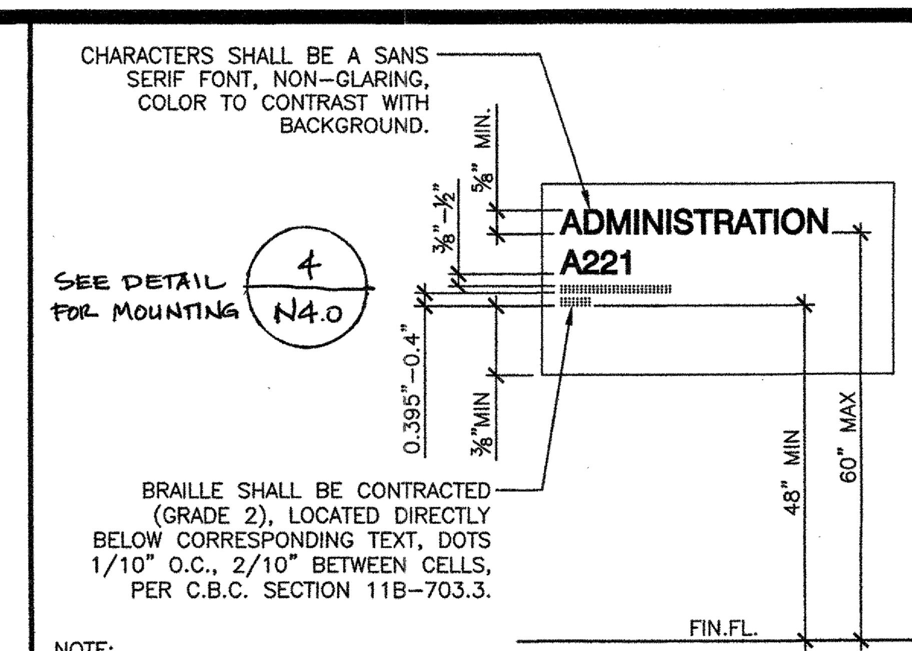

NOTE:
1. ALL REQUIRED SIGNAGE SHALL COMPLY WITH C.B.C. SECTION 11B-703.
2. FOR REQUIRED TACTILE SIGNS LOCATIONS, SEE SHEET N2.0, ACCESSIBILITY STANDARDS, "SECTION 11B-216".
3. SIGNS ARE NOT IN MODULAR MFR. SCOPE OF WORK.
4. ATTACH SIGNS USING ADHESIVE OR MIN. (2) TWO FLATHEAD COUNTERSUNK SCREWS, COMPATIBLE WITH WALL MATERIAL.

PERMANENT ROOM I.D. SIGNAGE — NOT TO SCALE — 5

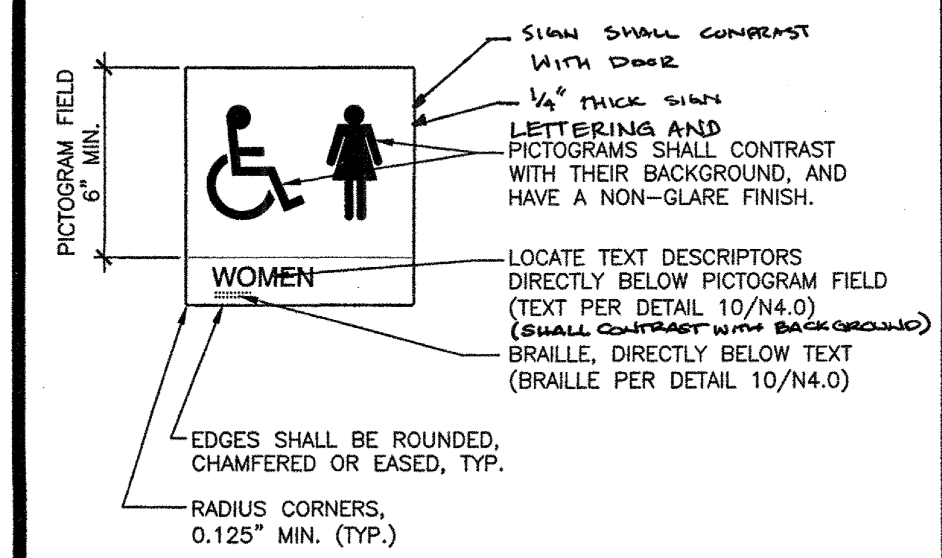

NOTES:
1. ATTACH SIGNS USING ADHESIVE OR MIN. (2) TWO FLATHEAD COUNTERSUNK SCREWS, COMPATIBLE WITH WALL MATERIAL.
2. LOCATE PER DETAIL 4/N4.0
3. SIGNS ARE NOT IN MODULAR MFR. SCOPE OF WORK.

- — NOT TO SCALE — 6

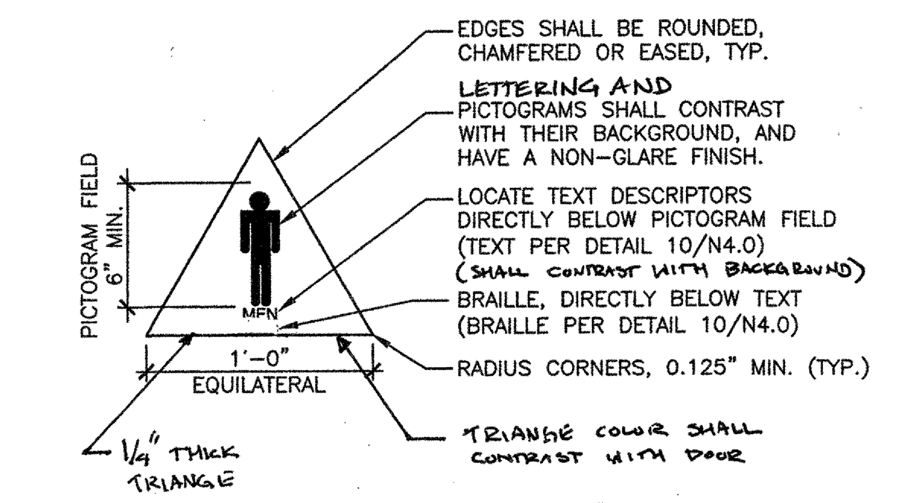

NOTES:
1. ATTACH SIGNS USING ADHESIVE OR MIN. (2) TWO FLATHEAD COUNTERSUNK SCREWS, COMPATIBLE WITH DOOR MATERIAL.
2. LOCATE PER DETAIL 4/N4.0
3. SIGNS ARE NOT IN MODULAR MFR. SCOPE OF WORK.

RESTROOM SYMBOL — NOT TO SCALE — 7

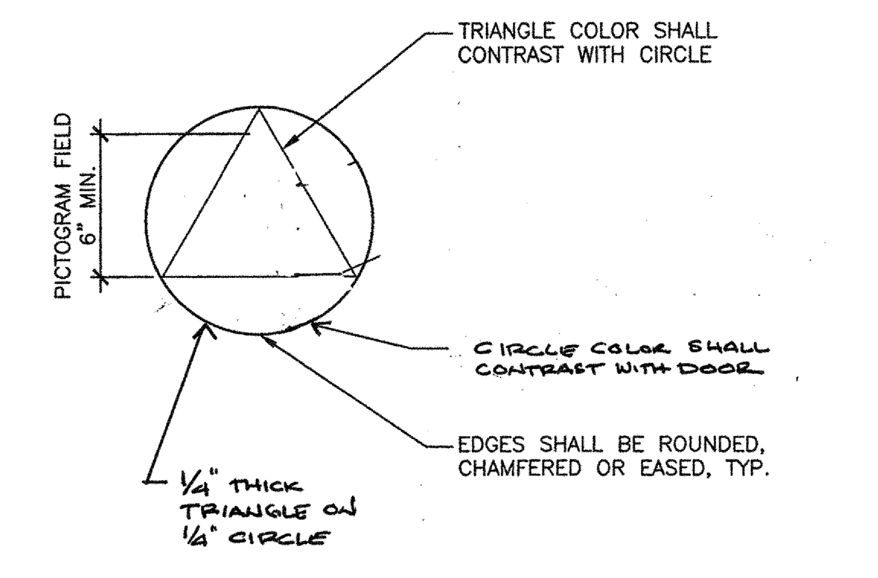

NOTES:
1. ATTACH SIGNS USING ADHESIVE OR MIN. (2) TWO FLATHEAD COUNTERSUNK SCREWS, COMPATIBLE WITH DOOR MATERIAL.
2. LOCATE PER DETAIL 4/N4.0
3. SIGNS ARE NOT IN MODULAR MFR. SCOPE OF WORK.

UNISEX SYMBOL — NOT TO SCALE — 8

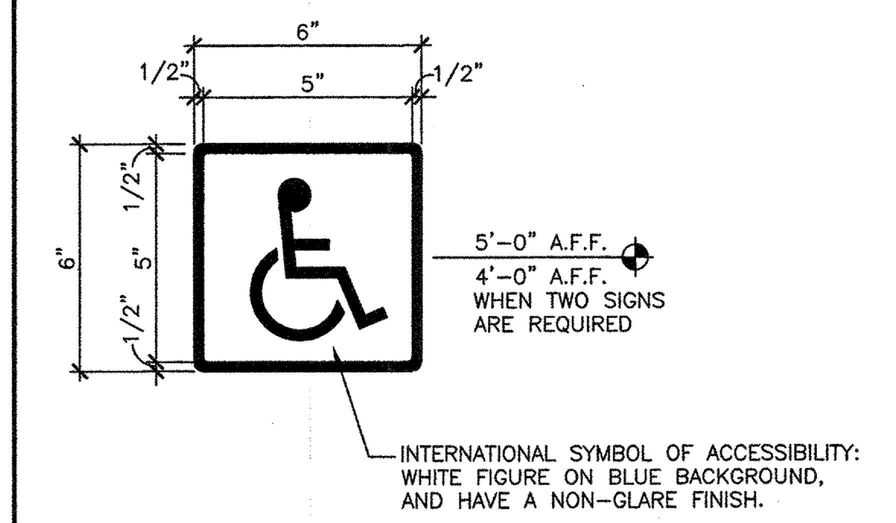

NOTES:
1. PROVIDE MECHANICAL MOUNTING W/ VANDAL RESISTANT FASTENERS. PROVIDE ADHESIVE MOUNTING SYSTEM WHEN ATTACHED TO GLAZING.
2. SYMBOL PER C.B.C. SECTION 11B-703.7.2.1
3. SIGNS ARE NOT IN MODULAR MFR. SCOPE OF WORK.

INT'L SYMBOL OF ACCESSIBILITY — NOT TO SCALE — 9

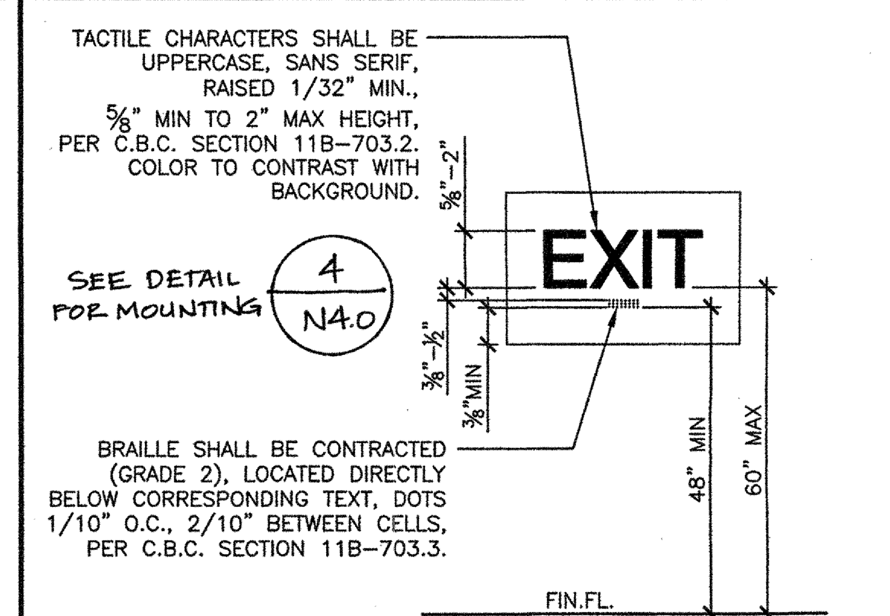

NOTE:
1. ALL REQUIRED SIGNAGE SHALL COMPLY WITH C.B.C. SECTION 11B-703.
2. FOR REQUIRED TACTILE SIGNS LOCATIONS, SEE SHEET N2.0, ACCESSIBILITY STANDARDS, "SECTION 11B-216".
3. SIGNS ARE NOT IN MODULAR MFR. SCOPE OF WORK.
4. ATTACH SIGNS USING ADHESIVE OR MIN. (2) TWO FLATHEAD COUNTERSUNK SCREWS, COMPATIBLE WITH WALL MATERIAL.

TACTILE SIGNAGE — NOT TO SCALE — 10

A. TYPESTYLE: 1" HIGH BLOCK 1/16" THICK ENGRAVED PLASTIC
B. MOUNTING: SELF-ADHESIVE OR (4) #8x1" SCREWS. HEIGHT AS SHOWN.
C. CAPACITY POSTING PER C.B.C. SECTION 1004.3 TITLE 19 C.C.R., SECTION 3.30: "THIS ROOM SHALL BE POSTED WITH A DURABLE SIGN NEAR THE MAIN EXIT FROM THE ROOM".
D. THE SIGN SHALL BE WORDED AS FOLLOWS, WITH THE APPROPRIATE CAPACITY NUMBER:

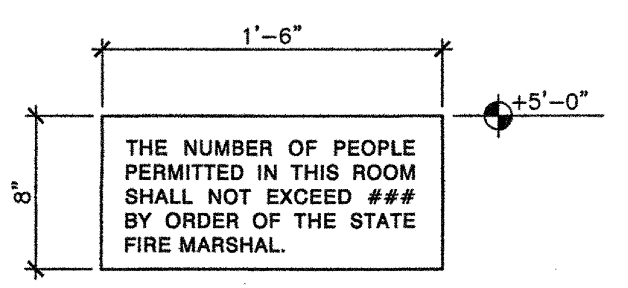

NOTE:
SIGNS ARE NOT IN MODULAR MFR. SCOPE OF WORK.

OCCUPANT LOAD SIGN — NOT TO SCALE — 11

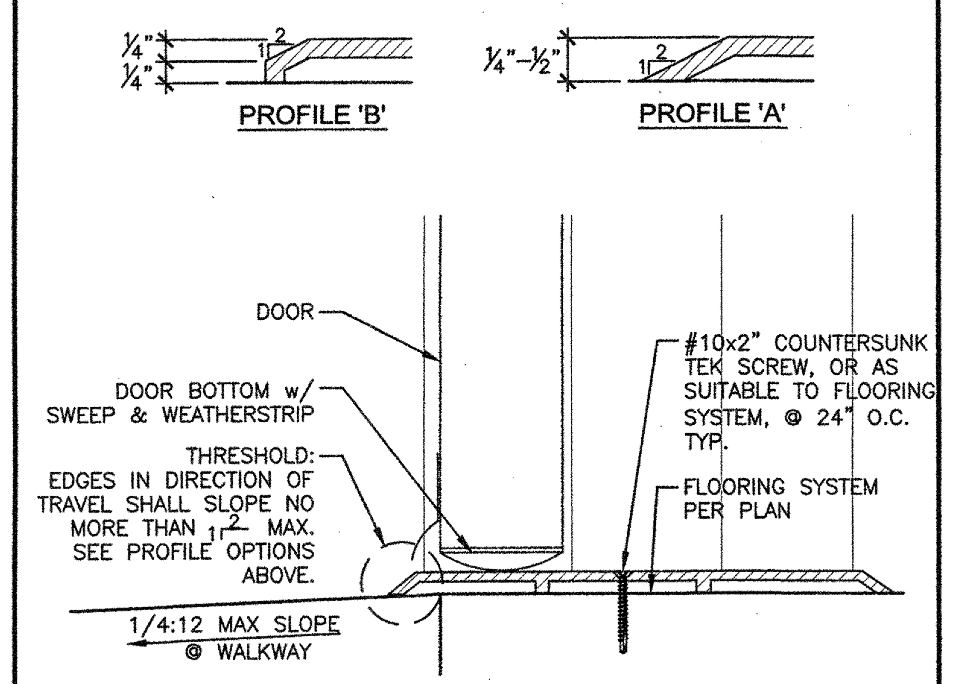

NOT TO SCALE

THRESHOLD DETAIL @ EXTERIOR ENTRY DOOR — 12

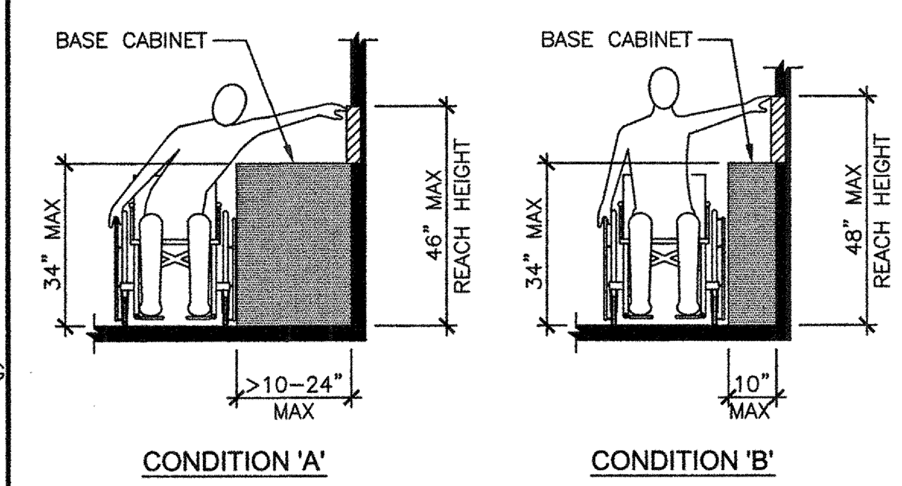

SIDE REACH @ BASE CABINET — NOT TO SCALE — 13

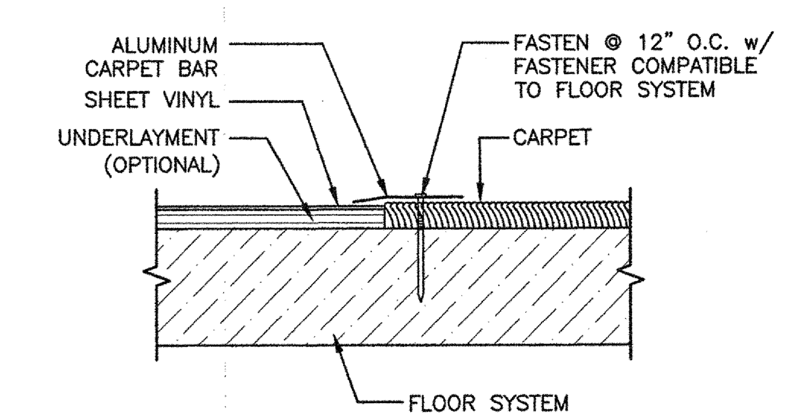

FLOORING TRANSITION DETAIL — NOT TO SCALE — 14

NOT USED — 15

NOT USED — 16

NOT USED — 17

NOT USED — 18

NOT USED — 19

NOT USED — 20

American Modular Systems
787 Spreckels Ave.Manteca, CA 95336
Phone (209) 825-1921 - Fax (209) 825-7018
americanmodular.com

MODULAR MANUFACTURER PROPRIETARY STATEMENT

THESE DRAWINGS AND THE MATERIAL CONTAINED THEREIN ARE THE PROPERTY OF AMERICAN MODULAR SYSTEMS, INC. (AMS) AND SHALL NOT BE REPRODUCED, COPIED OR OTHERWISE DISPOSED OF DIRECTLY OR INDIRECTLY AND SHALL NOT BE USED IN WHOLE OR IN PART TO ASSIST IN THE MAKING OF OR FOR THE PURPOSE OF FURNISHING ANY INFORMATION FOR THE MAKING OF DRAWINGS, PRINTS, APPARATUS OR PARTS THEREOF WITHOUT THE FULL KNOWLEDGE AND WRITTEN CONSENT OF AMS. ALL PATENTABLE MATERIAL CONTAINED HEREIN AND ORIGINATING WITH AMS SHALL BE THE SOLE PROPERTY OF AMS.

PRE-CHECKED SET NAME

24' x 40' THRU 120' x 40' BUILDINGS

SITE SPECIFIC PROJECT NAME

SHEET TITLE

ACCESSIBILITY STANDARDS DETAILS

MANUFACTURER PROFESSIONAL OF RECORD ON PC

LICENSED ARCHITECT
RANDALL PATRICK CAVANAGH
No. C12631
Ren. 3-31-17
STATE OF CALIFORNIA

PROJECT SPECIFIC STATE AGENCY APPROVAL

IDENTIFICATION STAMP
DIV. OF THE STATE ARCHITECT
02 116495
AC TM FLS SS
DATE 12-18-2017

ORIGINAL PC STATE AGENCY APPROVAL

IDENTIFICATION STAMP
DIV. OF THE STATE ARCHITECT
CA. DEPT. OF GENERAL SERVICES
PC 02-113876
AC FLS SS
DATE 6/22/15

PRE-CHECK (PC) DOCUMENT - CODE: 2013 CBC
A SEPARATE PROJECT APPLICATION FOR CONSTRUCTION IS REQUIRED

REVISIONS

1	
2	
3	
4	

DRAWN BY:	
SCALE:	AS NOTED
DATE:	

SHEET NUMBER

N4.0

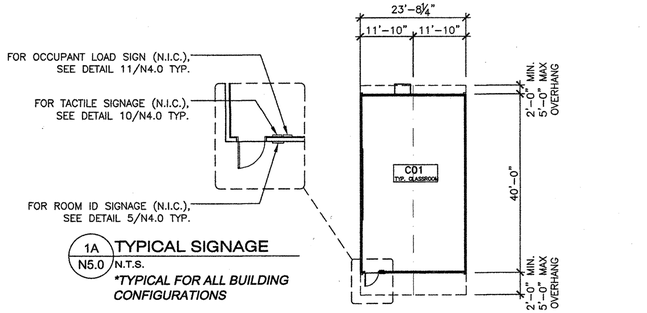

1A / N5.0 TYPICAL SIGNAGE N.T.S.

**TYPICAL FOR ALL BUILDING CONFIGURATIONS*

BUILDING DATA					
BUILDING SIZE	OVERALL SIZE	SQUARE FOOTAGE PER FLOOR*	SQ.FT. ALLOWED PER FLOOR	MAXIMUM OCCUPANT LOAD (LOAD FACTOR: 20)	EGRESS INCHES REQUIRED (0.2 PER OCCUPANT)
24' x 40'	23' - 8½"	947.5	9500	47	9.5

*THE BUILDING SQUARE FOOTAGE IS SUBJECT TO INCREASE AS PERMITTED BY C.B.C. SECTION 506.2 AND 506.3. SEE SHEET NOTE 2.

24' x 40' BUILDING FLOOR PLAN — SCALE: 1/16" = 1'-0" | 1

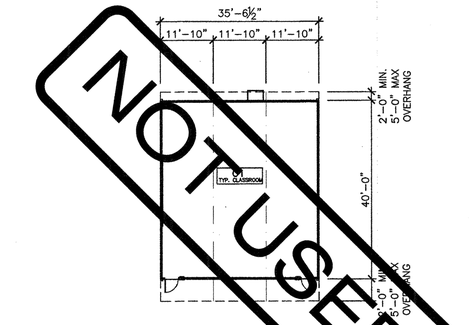

BUILDING DATA					
BUILDING SIZE	OVERALL SIZE	SQUARE FOOTAGE PER FLOOR*	SQ.FT. ALLOWED PER FLOOR	MAXIMUM OCCUPANT LOAD (LOAD FACTOR: 20)	EGRESS INCHES REQUIRED (0.2 PER OCCUPANT)
36' x 40'	35' - 6½"	1421.6	9500	71	14.2

*THE BUILDING SQUARE FOOTAGE IS SUBJECT TO INCREASE AS PERMITTED BY C.B.C. SECTION 506.2 AND 506.3. SEE SHEET NOTE 2.

36' x 40' BUILDING FLOOR PLAN — SCALE: 1/16" = 1'-0" | 2

BUILDING DATA					
BUILDING SIZE	OVERALL SIZE	SQUARE FOOTAGE PER FLOOR*	SQ.FT. ALLOWED PER FLOOR	MAXIMUM OCCUPANT LOAD (LOAD FACTOR: 20)	EGRESS INCHES REQUIRED (0.2 PER OCCUPANT)
48' x 40'	47' - 4¾"	1895.8	9500	95	20

*THE BUILDING SQUARE FOOTAGE IS SUBJECT TO INCREASE AS PERMITTED BY C.B.C. SECTION 506.2 AND 506.3. SEE SHEET NOTE 2.

48' x 40' BUILDING FLOOR PLAN — SCALE: 1/16" = 1'-0" | 3

BUILDING DATA					
BUILDING SIZE	OVERALL SIZE	SQUARE FOOTAGE PER FLOOR*	SQ.FT. ALLOWED PER FLOOR	MAXIMUM OCCUPANT LOAD (LOAD FACTOR: 20)	EGRESS INCHES REQUIRED (0.2 PER OCCUPANT)
60' x 40'	59' - 3"	2370	9500	119	23.7

*THE BUILDING SQUARE FOOTAGE IS SUBJECT TO INCREASE AS PERMITTED BY C.B.C. SECTION 506.2 AND 506.3. SEE SHEET NOTE 2.

60' x 40' BUILDING FLOOR PLAN — SCALE: 1/16" = 1'-0" | 4

BUILDING DATA					
BUILDING SIZE	OVERALL SIZE	SQUARE FOOTAGE PER FLOOR*	SQ.FT. ALLOWED PER FLOOR	MAXIMUM OCCUPANT LOAD (LOAD FACTOR: 20)	EGRESS INCHES REQUIRED (0.2 PER OCCUPANT)
72' x 40'	71' - 1¼"	2844.1	9500	[illegible]	28.4

*THE BUILDING SQUARE FOOTAGE IS SUBJECT TO INCREASE AS PERMITTED BY C.B.C. SECTION 506.2 AND 506.3. SEE SHEET NOTE 2.

72' x 40' BUILDING FLOOR PLAN — SCALE: 1/16" = 1'-0" | 5

BUILDING DATA					
BUILDING SIZE	OVERALL SIZE	SQUARE FOOTAGE PER FLOOR*	SQ.FT. ALLOWED PER FLOOR	MAXIMUM OCCUPANT LOAD (LOAD FACTOR: 20)	EGRESS INCHES REQUIRED (0.2 PER OCCUPANT)
84' x 40'	82' - 1½"	3318.3	9500	166	[illegible]

*THE BUILDING SQUARE FOOTAGE IS SUBJECT TO INCREASE AS PERMITTED BY C.B.C. SECTION 506.2 AND 506.3. SEE SHEET NOTE 2.

84' x 40' BUILDING FLOOR PLAN — SCALE: 1/16" = 1'-0" | 6

1. PANIC HARDWARE IS REQUIRED TO BE INSTALLED WHEN THE CONFIGURATION OF ANY ROOM PROVIDES AN OCCUPANT LOAD OF 50 OR GREATER, PER CBC 1008.1.10.
2. THE BUILDING SIZES AND SQUARE FOOTAGES REFLECTED ON THIS SHEET ARE SUBJECT TO SQUARE FOOTAGE INCREASE AS PERMITTED BY SITE CONDITIONS, PER CBC 506.2, AND BY AUTOMATIC SPRINKLER SYSTEM, PER CBC 506.3.
3. RESTROOM CONFIGURATIONS OCCUR AT OUTER WINGS OF BUILDINGS.
4. SEE FOUNDATION DRAWINGS FOR TRUE DIMENSIONS AT FLOOR PLACEMENT AND OVERALL FOUNDATION SIZE.
5. FOR ROOM ID SIGNAGE (N.I.C.) SEE DETAIL 5/N4.0. TYPICAL FOR ALL BUILDING CONFIGUATIONS.

SITE NOTE

3/16:12 (1%) MINIMUM TO 1/4:12 (2%) MAXIMUM GRADE FROM FACE OF BUILDING MUST BE ADHERED TO FOR WATER RUN-OFF. PONDING MAY OCCUR AROUND THE PERIMETER OF THE BUILDING.

GENERAL NOTES

AMS®
American Modular Systems
787 Spreckels Ave.Manteca, CA 95336
Phone (209) 825-1921 - Fax (209) 825-7018
americanmodular.com

MODULAR MANUFACTURER PROPRIETARY STATEMENT

THESE DRAWINGS AND THE MATERIAL CONTAINED THEREIN ARE THE PROPERTY OF AMERICAN MODULAR SYSTEMS, INC. (AMS) AND SHALL NOT BE REPRODUCED, COPIED OR OTHERWISE DISPOSED OF DIRECTLY OR INDIRECTLY AND SHALL NOT BE USED IN WHOLE OR IN PART TO ASSIST IN THE MAKING OF OR FOR THE PURPOSE OF FURNISHING ANY INFORMATION FOR THE MAKING OF DRAWINGS, PRINTS, APPARATUS OR PARTS THEREOF WITHOUT THE FULL KNOWLEDGE AND WRITTEN CONSENT OF AMS. ALL PATENTABLE MATERIAL CONTAINED HEREIN AND ORIGINATING WITH AMS SHALL BE THE SOLE PROPERTY OF AMS.

PRE-CHECKED SET NAME

24' x 40' THRU 120' x 40' BUILDINGS

SITE SPECIFIC PROJECT NAME

SHEET TITLE

MULTIPLE FLOOR PLAN CONFIGURATIONS

MANUFACTURER PROFESSIONAL OF RECORD ON PC

LICENSED ARCHITECT — RAMON PATRICK CAMARON — No. C12631 Ren. 3-31-17 — STATE OF CALIFORNIA

PROJECT SPECIFIC STATE AGENCY APPROVAL

IDENTIFICATION STAMP
DIV. OF THE STATE ARCHITECT
02 116495
AC TM PC ISS 10/
DATE 12-8-2017

ORIGINAL PC STATE AGENCY APPROVAL

IDENTIFICATION STAMP
DIV. OF THE STATE ARCHITECT
CA. DEPT. OF GENERAL SERVICES
PC 02-113876
AC AR FI ISS 2/OR
DATE 6/22/15

PRE-CHECK (PC) DOCUMENT - CODE: 2013 CBC
A SEPARATE PROJECT APPLICATION FOR CONSTRUCTION IS REQUIRED

REVISIONS

1	
2	
3	
4	

DRAWN BY:

SCALE: AS NOTED

DATE:

SHEET NUMBER

N5.0

American Modular Systems | Gen7

Performance Runs By Zone & 45° Orientation — **2013 Energy Code**

NOTE: Enter data in colored cells only.

Project Name:	24' x 40' Modular Classroom	DSA Application #: 0X-XXXXX	
Date of Title 24 Report:	2/4/2015	DSA File No.:	
Model Name and Option:	AMS 24'x40' for DSA.cibd	HVAC Units: Model ID	Efficiency: EER, SEER
Module's Floor Area:	948	Additional info.	
Additional Information:		Additional info.	

Comments: 1. Input data from performance runs in columns 2 and 3 for each climate zone worksheet. Subtract process and receptacle loads.
2. Input Module detailed information on Table A - One Spreadsheet Tab per HVAC System (i.e. HP, RTU)

AMS 24'x40' for DSA.cibd — Climate Zone: 14 Reference City: China Lake

Front Orientation	Std Budget kBtu/sf-yr	Prop. Design kBtu/sf-yr	Compliance margin
0	517.30	456.80	11.7%
45	535.20	476.60	10.9%
90	540.30	478.80	11.4%
135	529.50	465.70	12.0%
180	515.90	455.10	11.8%
225	531.80	475.30	10.6%
270	537.00	471.50	12.2%
315	527.90	466.90	11.6%

AMS 24'x40' for DSA.cibd — Climate Zone: 15 Reference City: El Centro

Front Orientation	Std Budget kBtu/sf-yr	Prop. Design kBtu/sf-yr	Compliance margin
0	557.20	483.20	13.3%
45	573.00	497.80	13.1%
90	575.40	500.60	13.0%
135	564.80	491.30	13.0%
180	556.90	482.50	13.4%
225	573.70	497.00	13.4%
270	576.60	501.10	13.1%
315	565.80	493.10	12.8%

AMS 24'x40' for DSA.cibd — Climat Zone: 16 Reference City: Mount Shasta

Front Orientation	Std Budget kBtu/sf-yr	Prop. Design kBtu/sf-yr	Compliance margin
0	468.40	432.10	7.7%
45	484.00	444.10	8.2%
90	487.10	444.10	8.8%
135	476.10	435.90	8.4%
180	464.80	430.90	7.3%
225	479.80	442.20	7.8%
270	483.20	443.40	8.2%
315	474.40	436.60	8.0%

Table A - Module Information per HVAC system.
Climate Zones: 1 thru 16 (if different, use another tab)

Envelope: Insulation Types	Standing Seam
Roof, Type 1	R-A
Roof, Type 2	
Wall, Type 1	R-13
Wall, Type 2	Option: R-13 batt + R-5 c.i.
Floor, Type 1	Concrete Slab above
Floor, Type 2	
Glazing: Typical Glass Type	Open Fixed
U-Factor:	0.78 (NFRC)
RSHGC:	0.43 SHGC (NFRC)
VT:	37%
HVAC Units: Model ID	Efficiency: EER, SEER
Bard S43H1 (SPVU) - 3-1/2 ton	11.1 EER (13.0 SEER)
Bard S43H1 (SPVU) - 3-1/2 ton	3.2 COP (7.7 HSPF)

Provide .Bld file for Climate Zone Climate Zone: 15 Reference City: El Centro @ deg

Notes:
When a unique PC design contains multiple sizes, the smallest and the largest potential size should be modeled at 30 compass intervals in each Climate Zone for which the PC seeks approval.
The electronically-generated computer file(s) that produced the worst case energy use results for each climate zone for each unique PC design configuration that is modeled should be provided to DSA.

Brummitt Energy Associates, Inc. www.brummitt.com

Project Name:	AMS Modular Classroom 24x40	NRCC-PRF-01-E	Page 1 of 18
Project Address:	CZ 16 Mount Shasta (Worst Case) CZ 16 Mount Shasta	Calculation Date/Time:	17:23, Thu, May 21, 2015
Compliance Scope:	NewComplete	Input File Name:	EP6 AMS 24'x40' for DSA- CZ16.cibd

A. PROJECT GENERAL INFORMATION

1.	Project Location (city)	CZ 16 Mount Shasta	7.	# of dwelling units	0
2.	CA Zip Code		8.	Compliance Software (version)	CBECC-Com 2013-3b (717)
3.	Climate Zone	16	9.	Building Orientation (deg)	(S) 180 deg
4.	Total Conditioned Floor Area	948 ft²	10.	Permitted Scope of Work	NewComplete
5.	Total Unconditioned Floor Area	0 ft²	11.	Building Type(s)	Nonresidential
6.	# of Stories (Habitable Above Grade)	1			

B. COMPLIANCE RESULTS FOR PERFORMANCE COMPONENTS § 140.1

BUILDING COMPLIES

1. Energy Component	2. Standard Design (TDV)	3. Proposed Design (TDV)	4. Compliance Margin (TDV)	5. Percent Better than Standard
Space Heating	47.2	114.4	-67.2	-142.4%
Space Cooling	98.1	110.8	-12.7	-12.9%
Indoor Fans	155.6	17.7	137.9	88.6%
Heat Rejection	--	--	--	--
Pumps & Misc.	--	--	--	--
Domestic Hot Water	36.5	95.6	-59.1	-161.9%
Indoor Lighting	60.6	25.6	35.0	57.8%
COMPLIANCE TOTAL	398.0	364.1	33.9	8.5%
Receptacle	66.8	66.8		0.0%
Process	--	--		--
Process Ltg	--	--		--
TOTAL	464.8	430.9		7.3%

CA Building Energy Efficiency Standards- 2013 Nonresidential Compliance — Report Version: NRCC-PRF-01-E-03232015-717

Project Name:	AMS Modular Classroom 24x40	NRCC-PRF-01-E	Page 2 of 18
Project Address:	CZ 16 Mount Shasta (Worst Case) CZ 16 Mount Shasta	Calculation Date/Time:	17:23, Thu, May 21, 2015
Compliance Scope:	NewComplete	Input File Name:	EP6 AMS 24'x40' for DSA- CZ16.cibd

C. PRIORITY PLAN CHECK/ INSPECTION ITEMS (in order of highest to lowest TDV energy savings)

1st	Indoor Fans: Check envelope and mechanical
2nd	Indoor Lighting: Check lighting
3rd	Heat Rejection: Check envelope and mechanical
4th	Pumps & Misc.: Check mechanical
5th	Space Cooling: Check envelope and mechanical
6th	Domestic Hot Water: Check mechanical
7th	Space Heating: Check envelope and mechanical

Compliance Margin By Energy Component (from Table B column 4)

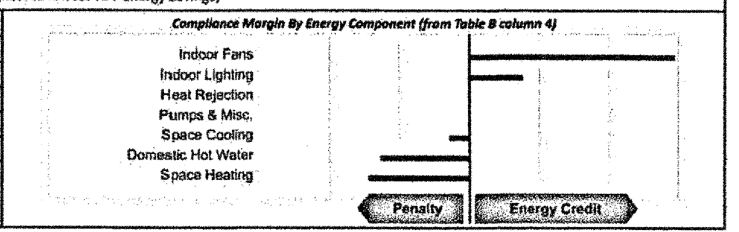

D. EXCEPTIONAL CONDITIONS

The compliance model includes HVAC equipment with capacities that differ from the building plans, presumably to meet unmet load hour requirements. Verify that the equipment in the design provides adequate cooling and heating capacity for the spaces served.

E. HERS VERIFICATION

This Section Does Not Apply

F. ADDITIONAL REMARKS

CZ 14 China Lake CZ 15 El Centro CZ 16 Mount Shasta Roof: the roof U-value has been calculated using EZFrame per CEC guidance; U-value = 0.070

CA Building Energy Efficiency Standards- 2013 Nonresidential Compliance — Report Version: NRCC-PRF-01-E-03232015-717

Project Name:	AMS Modular Classroom 24x40	NRCC-PRF-01-E	Page 3 of 18
Project Address:	CZ 16 Mount Shasta (Worst Case) CZ 16 Mount Shasta	Calculation Date/Time:	17:23, Thu, May 21, 2015
Compliance Scope:	NewComplete	Input File Name:	EP6 AMS 24'x40' for DSA- CZ16.cibd

G. COMPLIANCE PATH & CERTIFICATE OF COMPLIANCE SUMMARY

Identify which building components use the performance or prescriptive path for compliance. "NA"= not in project
For components that utilize the performance path, indicate the sheet number that includes mandatory notes on plans.

Building Component	Compliance Path	Compliance Forms (required for submittal)	Location of Mandatory Notes on Plans
Envelope	☒ Performance	NRCC-PRF-ENV-DETAILS (section of the NRCC-PRF-01-E)	
	☐ Prescriptive	NRCC-ENV-01 / 02 / 03 / 04 / 05 / 06-E	
	☐ NA		
Mechanical	☒ Performance	NRCC-PRF-MCH-DETAILS (section of the NRCC-PRF-01-E)	
	☐ Prescriptive	NRCC-MCH-01 / 02 / 03 / 04 / 05 / 06 / 07-E	
	☐ NA		
Domestic Hot Water	☒ Performance	NRCC-PRF-PLB-DETAILS (section of the NRCC-PRF-01-E)	
	☐ Prescriptive	NRCC-PLB-01-E	
	☐ NA		
Lighting (Indoor Conditioned)	☒ Performance	NRCC-PRF-LTI-DETAILS (section of the NRCC-PRF-01-E)	
	☐ Prescriptive	NRCC-LTI-01 / 02 / 03 / 04 / 05-E	
	☐ NA		
Covered Process: Commercial Kitchens	☐ Performace	S2 (section of the NRCC-PRF-01-E)	
	☐ Prescriptive	NRCC-PRC-01/ 03-E	
	☒ NA		
Covered Process: Computer Rooms	☐ Performace	S3 (section of the NRCC-PRF-01-E)	
	☐ Prescriptive	NRCC-PRC-01/ 04-E	
	☒ NA		
Covered Process: Laboratory Exhaust	☐ Performace	S4 (section of the NRCC-PRF-01-E)	
	☐ Prescriptive	NRCC-PRC-01/ 09-E	
	☒ NA		

CA Building Energy Efficiency Standards- 2013 Nonresidential Compliance — Report Version: NRCC-PRF-01-E-03232015-717

Project Name:	AMS Modular Classroom 24x40	NRCC-PRF-01-E	Page 4 of 18
Project Address:	CZ 16 Mount Shasta (Worst Case) CZ 16 Mount Shasta	Calculation Date/Time:	17:23, Thu, May 21, 2015
Compliance Scope:	NewComplete	Input File Name:	EP6 AMS 24'x40' for DSA- CZ16.cibd

G. COMPLIANCE PATH & CERTIFICATE OF COMPLIANCE SUMMARY

The following building components are only eligible for prescriptive compliance. Indicate which are relevant to the project.

Yes	NA	Prescriptive Requirement	Compliance Forms
☐	☒	Lighting (Indoor Unconditioned) §140.6	NRCC-LTI-01 / 02 / 03 / 04 / 05-E
☐	☒	Lighting (Outdoor) §140.7	NRCC-LTO-01 / 02 / 03-E
☐	☒	Lighting (Sign) §140.8	NRCC-LTS-01-E
☐	☒	Solar Thermal Water Heating: §140.5	NRCC-STH-01-E

The following building components may have mandatory requirements per Part 6. Indicate which are relevant to the project.

Yes	NA	Mandatory Requirement	Compliance Forms
		Commissioning: §120.8	
☐	☒	Simple Systems	NRCC-CXR-01 / 02 / 03 / 05-E
☐	☒	Complex Systems	NRCC-CXR-01 / 02 / 04 / 05-E
☐	☒	Electrical: §130.5	NRCC-ELC-01-E
☒	☐	Solar Ready: §110.10	NRCC-SRA-01 / 02-E
		Covered Process: §120.6	NRCC-PRC-01-E
☐	☒	Parking Garage	NRCC-PRC-02-E
☐	☒	Commercial Refrigeration	NRCC-PRC-05-E
☐	☒	Warehouse Refrigeration	NRCC-PRC-06/07/08-E
☐	☒	Compressed Air	NRCC-PRC-10-E
☐	☒	Process Boilers	NRCC-PRC-11-E

CA Building Energy Efficiency Standards- 2013 Nonresidential Compliance — Report Version: NRCC-PRF-01-E-03232015-717

Project Name:	AMS Modular Classroom 24x40	NRCC-PRF-01-E	Page 5 of 18
Project Address:	CZ 16 Mount Shasta (Worst Case) CZ 16 Mount Shasta	Calculation Date/Time:	17:23, Thu, May 21, 2015
Compliance Scope:	NewComplete	Input File Name:	EP6 AMS 24'x40' for DSA- CZ16.cibd

H. CERTIFICATE OF INSTALLATION, CERTIFICATE OF ACCEPTANCE & CERTIFICATE OF VERIFICATION SUMMARY (NRCI/NRCA/NRCV) –
Documentation Author to indicate which Certificates must be submitted for the features to be recognized for compliance
(Retain copies and verify forms are completed and signed to post in field for Field Inspector to verify).
See Tables G. and H. in MCH and LTI Details Sections for Acceptance Tests and forms by equipment.

Building Component	Compliance Forms (required for submittal)	Confirmed Pass	Confirmed Fail
Envelope	☒ NRCI-ENV-01-E - For all buildings	☐	☐
	☐ NRCA-ENV-02-F- NFRC label verification for fenestration	☐	☐
Mechanical	☒ NRCI-MCH-01-E - For all buildings with Mechanical Systems	☐	☐
	☒ NRCA-MCH-02-A- Outdoor Air	☐	☐
	☐ NRCA-MCH-03-A – Constant Volume Single Zone HVAC	☐	☐
	☐ NRCA-MCH-04-H- Air Distribution Duct Leakage	☐	☐
	☐ NRCA-MCH-05-A- Air Economizer Controls	☐	☐
	☐ NRCA-MCH-06-A- Demand Control Ventilation	☐	☐
	☒ NRCA-MCH-07-A – Supply Fan Variable Flow Controls	☐	☐
	☐ NRCA-MCH-08-A- Valve Leakage Test	☐	☐
	☐ NRCA-MCH-09-A – Supply Water Temp Reset Controls	☐	☐
	☐ NRCA-MCH-10-A- Hydronic System Variable Flow Controls	☐	☐
	☐ NRCA-MCH-11-A – Auto Demand Shed Controls	☐	☐
	☐ NRCA-MCH-12-A- Packaged Direct Expansion Units	☐	☐
	☐ NRCA-MCH-13-A- Air Handling Units and Zone Terminal Units	☐	☐
	☐ NRCA-MCH-14-A- Distributed Energy Storage	☐	☐
	☐ NRCA-MCH-15-A – Thermal Energy Storage	☐	☐
	☐ NRCA-MCH-16-A- Supply Air Temp Reset Controls	☐	☐
	☐ NRCA-MCH-17-A – Condensate Water Temp Reset Controls	☐	☐
	☐ NRCA-MCH-18-A- Energy Management Controls Systems	☐	☐
	☐ NRCV-MCH-04-H- Duct Leakage Test	☐	☐

CA Building Energy Efficiency Standards- 2013 Nonresidential Compliance — Report Version: NRCC-PRF-01-E-03232015-717

Project Name:	AMS Modular Classroom 24x40	NRCC-PRF-01-E	Page 6 of 18
Project Address:	CZ 16 Mount Shasta (Worst Case) CZ 16 Mount Shasta	Calculation Date/Time:	17:23, Thu, May 21, 2015
Compliance Scope:	NewComplete	Input File Name:	EP6 AMS 24'x40' for DSA- CZ16.cibd

H. CERTIFICATE OF INSTALLATION, CERTIFICATE OF ACCEPTANCE & CERTIFICATE OF VERIFICATION SUMMARY (NRCI/NRCA/NRCV) –
Documentation Author to indicate which Certificates must be submitted for the features to be recognized for compliance
(Retain copies and verify forms are completed and signed to post in field for Field Inspector to verify).
See Tables G. and H. in MCH and LTI Details Sections for Acceptance Tests and forms by equipment.

Building Component	Compliance Forms (required for submittal)	Confirmed Pass	Confirmed Fail
Plumbing	☐ NRCI-PLB-01-E - For all buildings with Plumbing Systems	☐	☐
	☐ NRCI-PLB-02-E - required on central systems in high-rise residential, hotel/motel application.	☐	☐
	☐ NRCI-PLB-03-E - Single dwelling unit systems in high-rise residential, hotel/motel application.	☐	☐
	☐ NRCI-PLB-21-E - HERS verified central systems in high-rise residential, hotel/motel application.	☐	☐
	☐ NRCI-PLB-22-E - HERS verified single dwelling unit systems in high-rise residential, hotel/motel application.	☐	☐
	☐ NRCV-PLB-21-H- HERS verified central systems in high-rise residential, hotel/motel application.	☐	☐
	☐ NRCV-PLB-22-H - HERS verified single dwelling unit systems in high-rise residential, hotel/motel application.	☐	☐
	☐ NRCI-STH-01-E - Any solar water heating	☐	☐
Indoor Lighting	☒ NRCI-LTI-01-E - For all buildings	☐	☐
	☐ NRCI-LTI-02-E - Lighting control system, or for an Energy Management Control System (EMCS)	☐	☐
	☐ NRCI-LTI-03-E - Line-voltage track lighting integral current limiter, or for a supplementary overcurrent protection panel used to energize only line-voltage track lighting	☐	☐
	☐ NRCI-LTI-04-E - Two interlocked systems serving an auditorium, a convention center, a conference room, or a theater	☐	☐
	☐ NRCI-LTI-05-E - Lighting Control Credit Power Adjustment Factor (PAF)	☐	☐
	☐ NRCI-LTI-06-E - Additional wattage installed in a video conferencing studio	☐	☐
	☒ NRCA-LTI-02-A - Occupancy sensors and automatic time switch controls.	☐	☐
	☐ NRCA-LTI-03-A - Automatic daylighting controls	☐	☐
	☐ NRCA-LTI-04-A - Demand responsive lighting controls	☐	☐
Outdoor Lighting	☐ NRCI-LTO-01-E – Outdoor Lighting	☐	☐
	☐ NRCI-LTO-01-E- EMCS Lighting Control System	☐	☐
	☐ NRCA-LTO-02-A – Outdoor Lighting Control	☐	☐
Sign Lighting	☐ NRCI-LTS-01-E – Sign Lighting	☐	☐
Electrical	☐ NRCI-ELC-01-E – Electrical Power Distribution	☐	☐
Photovoltaic	☐ NRCI-SPV-01-E Photovoltaic Systems	☐	☐

CA Building Energy Efficiency Standards- 2013 Nonresidential Compliance — Report Version: NRCC-PRF-01-E-03232015-717

Project Name:	AMS Modular Classroom 24x40	NRCC-PRF-01-E	Page 7 of 18
Project Address:	CZ 16 Mount Shasta (Worst Case) CZ 16 Mount Shasta	Calculation Date/Time:	17:23, Thu, May 21, 2015
Compliance Scope:	NewComplete	Input File Name:	EP6 AMS 24'x40' for DSA- CZ16.cibd

H. CERTIFICATE OF INSTALLATION, CERTIFICATE OF ACCEPTANCE & CERTIFICATE OF VERIFICATION SUMMARY (NRCI/NRCA/NRCV) –
Documentation Author to indicate which Certificates must be submitted for the features to be recognized for compliance
(Retain copies and verify forms are completed and signed to post in field for Field Inspector to verify).
See Tables G. and H. in MCH and LTI Details Sections for Acceptance Tests and forms by equipment.

Building Component	Compliance Forms (required for submittal)	Confirmed Pass	Confirmed Fail
Covered Process	☐ NRCI-PRC-01-E Refrigerated Warehouse	☐	☐
	☐ NRCA-PRC-01-F- Compressed Air Systems	☐	☐
	☐ NRCA-PRC-02-F- Kitchen Exhaust	☐	☐
	☐ NRCA-PRC-03-F- Garage Exhaust	☐	☐
	☐ NRCA-PRC-04-F- Refrigerated Warehouse- Evaporator Fan Motor Controls	☐	☐
	☐ NRCA-PRC-05-F- Refrigerated Warehouse- Evaporative Condenser Controls	☐	☐
	☐ NRCA-PRC-06-F- Refrigerated Warehouse- Air Cooled Condenser Controls	☐	☐
	☐ NRCA-PRC-07F- Refrigerated Warehouse- Variable Speed Compressor	☐	☐
	☐ NRCA-PRC-08-F- Electrical Resistance Underslab Heating System	☐	☐

I. ENVELOPE GENERAL INFORMATION (See NRCC-PRF-ENV-DETAILS for more information)

						Confirmed Pass	Confirmed Fail
1.	Total Conditioned Floor Area	948 ft²	5.	Number of Floors Above Grade	1		
2.	Total Unconditioned Floor Area	0 ft²	6.	Number of Floors Below Grade	0		
3.	Addition Conditioned Floor Area	0 ft²					
4.	Addition Unconditioned Floor Area	0 ft²					

7. Opaque Surfaces & Orientation	8. Total Gross Surface Area	9. Total Fenestration Area	10. Window to Wall Ratio	Pass	Fail
North Wall	279 ft²	80 ft²	28.7%	☐	☐
East Wall	445 ft²	0 ft²	00.0%	☐	☐
South Wall	263 ft²	80 ft²	30.4%	☐	☐
West Wall	445 ft²	0 ft²	00.0%	☐	☐
Total	1,432 ft²	160 ft²	11.2%	☐	☐
Roof	948 ft²	0 ft²	00.0%	☐	☐

CA Building Energy Efficiency Standards- 2013 Nonresidential Compliance — Report Version: NRCC-PRF-01-E-03232015-717

Project Name:	AMS Modular Classroom 24x40	NRCC-PRF-01-E	Page 8 of 18
Project Address:	CZ 16 Mount Shasta (Worst Case) CZ 16 Mount Shasta	Calculation Date/Time:	17:23, Thu, May 21, 2015
Compliance Scope:	NewComplete	Input File Name:	EP6 AMS 24'x40' for DSA- CZ16.cibd

J. FENESTRATION ASSEMBLY SUMMARY § 110.6

1. Fenestration Assembly Name / Tag or I.D.	2. Fenestration Type	3. Certification Method[1]	4. Assembly Method	5. Area ft²	6. Overall U-factor	7. Overall SHGC	8. Overall VT	Pass	Fail
All Weather 3/16? Grey / 1/8? Clear NFRC	VerticalFenestration	NFRCRated	Manufactured	160	0.78	0.43	0.37	☐	☐

[1] Newly installed fenestration shall have a certified NFRC Label Certificate or use the CEC default tables found in Table 116-A and Table 116B. Site-built fenestration less than 1,000 ft², or more than or equal to 1,000 ft² see Reference Nonresidential Appendix NA6.

Taking compliance credit for fenestration shading devices? (if "Yes", see NRCC-PRF-ENV-DETAILS for more information)	No

K. OPAQUE SURFACE ASSEMBLY SUMMARY § 120.7/ § 140.3

1. Surface Name	2. Surface Type	3. Area (ft²)	4. Framing Type	5. Cavity R-Value	6. Continuous R-Value	7. U-Factor / F-Factor / C-Factor	8. Condition Status	Pass	Fail
Roof: U 0.70 per EZFrame	Roof	948	Metal	19	2	U-Factor: 0.071	New	☐	☐
R-13 in 4 wood frame	ExteriorWall	1,432	Wood	13	NA	U-Factor: 0.094	New	☐	☐
Floor: Concr. Slab	ExteriorFloor	948	NA	0	NA	U-Factor: 0.180	New	☐	☐

L. ROOFING PRODUCT SUMMARY § 140.3

1. Product Type	2. Product ≥25 lb ft²	3. Aged Solar Reflectance	4. Thermal Emittance	5. SRI	6. Cool Roof Credit	7. CRRC Product ID Number	Pass	Fail
Roof: U 0.70 per EZFrame	No	0.08	0.75	NA	No	NA	☐	☐

CA Building Energy Efficiency Standards- 2013 Nonresidential Compliance — Report Version: NRCC-PRF-01-E-03232015-717

Project Name:	AMS Modular Classroom 24x40	NRCC-PRF-01-E	Page 9 of 18
Project Address:	CZ 16 Mount Shasta (Worst Case) CZ 16 Mount Shasta	Calculation Date/Time:	17:23, Thu, May 21, 2015
Compliance Scope:	NewComplete	Input File Name:	EP6 AMS 24'x40' for DSA- CZ16.cibd

M. HVAC SYSTEM SUMMARY (see NRCC-PRF-MCH-DETAILS for more information) § 110.1 / § 110.2

Dry System Equipment[1] (Fan & Economizer info included below in Table N)

1. Equip Name	2. Equip Type	3. System Type (Simple[3] or Complex[4])	4. Qty	5. Total Heating Output (kBtu/h)	6. Supp Heat Source (Y/N)	7. Supp Heat Output (kBtuh)	8. Total Cooling Output (kBtu/h)	9. Efficiency Cooling	9. Efficiency Heating	10. Acceptance Testing Required? (Y/N)[5]	Pass	Fail
AC-1	SZVAVHP	Simple	1	45	No	0	62	SEER-13.0	HSPF-7.7	Yes	☐	☐

Wet System Equipment[2] / Pumps

11. Equip Name	12. Equip Type	13. Qty	14. Vol (gal)	15. Rated Capacity (kBtu/h)	16. Efficiency	17. Standby Loss	18. Tank Ext. R Value	19. Qty	20. GPM	21. HP	22. VSD (Y/N)	Pass	Fail
WH-1 Rheem2	Instantaneous	1	3	15	EF: 0.930	NA	NA	NA	NA	NA	No	☐	☐

[1] Dry System Equipment includes furnaces, air handling units, heat pumps, etc.
[2] Wet System Equipment includes boilers, chillers, cooling towers, water heaters, etc.
[3] Simple Systems must complete NRCC-CXR-03-E commissioning design review form
[4] Complex Systems must complete NRCC-CXR-04-E commissioning design review form
[5] A summary of which acceptance tests are applicable is provided in NRCC-PRF-MCH-DETAILS

Discrepancy between modeled and designed equipment sizing? (if "Yes", see Table F. "Additional Remarks" for an explanation)	Yes

N. ECONOMIZER & FAN SYSTEMS SUMMARY[1] § 140.4

1. Equip Name	2. Outside Air CFM	3. Supply Fan CFM	Supply Fan HP	Supply Fan BHP	Supply Fan TSP (inch WC)	Supply Fan Control	4. Return Fan CFM	Return Fan HP	Return Fan BHP	Return Fan TSP (inch WC)	Return Fan Control	5. Economizer Type (if present)	Pass	Fail
AC-1	356	1875	0.795	NA	1.35	VariableSpeedDrive	NA	NA	NA	NA	NA	NoEconomizer	☐	☐

[1] Mechanical ventilation calculations and exhaust fans are included in the NRCC-PRF-MCH-DETAILS section

CA Building Energy Efficiency Standards- 2013 Nonresidential Compliance — Report Version: NRCC-PRF-01-E-03232015-717

APPROVED
DIVISION OF STATE ARCHITECT
HIGH PERFORMANCE SECTION
APP.# 02-113876 DATE: 6/2/15
Lydia Baron C.E.P.E.

02-113876 – 24' x 40' – 120' x 40' EXPOSED STEEL SAVED: 5/21/2015 5:39 PM PLOTTED: 5/22/2015

American Modular Systems
787 Spreckels Ave. Manteca, CA 95336
Phone (209) 825-1921 - Fax (209) 825-7018
americanmodular.com

MODULAR MANUFACTURER PROPRIETARY STATEMENT
THESE DRAWINGS AND THE MATERIAL CONTAINED THEREIN ARE THE PROPERTY OF AMERICAN MODULAR SYSTEMS, INC. (AMS) AND SHALL NOT BE REPRODUCED, COPIED OR OTHERWISE DISPOSED OF DIRECTLY OR INDIRECTLY AND SHALL NOT BE USED IN WHOLE OR IN PART TO ASSIST IN THE MAKING OF OR FOR THE PURPOSE OF FURNISHING ANY INFORMATION FOR THE MAKING OF DRAWINGS, PRINTS, APPARATUS OR PARTS THEREOF WITHOUT THE FULL KNOWLEDGE AND WRITTEN CONSENT OF AMS. ALL PATENTABLE MATERIAL CONTAINED HEREIN AND ORIGINATING WITH AMS SHALL BE THE SOLE PROPERTY OF AMS.

PRE-CHECKED SET NAME

24' x 40' THRU 120' x 40' BUILDINGS

SITE SPECIFIC PROJECT NAME

SHEET TITLE

ENERGY CALCULATIONS

MANUFACTURER PROFESSIONAL OF RECORD ON PC

LICENSED ARCHITECT
RANDALL PATRICK CAVANAGH
No. C12631
Ren. 03-31-17
STATE OF CALIFORNIA

PROJECT SPECIFIC STATE AGENCY APPROVAL

IDENTIFICATION STAMP
DIV. OF THE STATE ARCHITECT
02 116495
AC — FLS SS
DATE 12-18-2017

ORIGINAL PC STATE AGENCY APPROVAL

IDENTIFICATION STAMP
DIV. OF THE STATE ARCHITECT
CA. DEPT. OF GENERAL SERVICES
PC 02-113876
AC ___ FLS ___ SS
DATE 6/22/15

PRE-CHECK (PC) DOCUMENT – CODE: 2013 CBC
A SEPARATE PROJECT APPLICATION FOR CONSTRUCTION IS REQUIRED

REVISIONS

1	
2	
3	
4	

DRAWN BY:	
SCALE:	AS NOTED
DATE:	

SHEET NUMBER

EN.1

Project Name:	AMS Modular Classroom 24x40	NRCC-PRF-01-E	Page 10 of 18
Project Address:	CZ 16 Mount Shasta (Worst Case) CZ 16 Mount Shasta	Calculation Date/Time:	17:23, Thu, May 21, 2015
Compliance Scope:	NewComplete	Input File Name:	EP6 AMS 24'x40' for DSA- CZ16.cibd

O. EQUIPMENT CONTROLS		§ 120.2	Confirmed	
1.	2.	3.	Pass	Fail
Equip Name	Equip Type	Controls		
AC-1	SZVAVHP	No DCV Controls No Economizer No Supply Air Temp. Control	☐	☐
DHW1 - SHW	Service Hot Water, Primary Only	Fixed Temperature Control, No DDC	☐	☐

P. SYSTEM DISTRIBUTION SUMMARY	§ 120.4/ § 140.4(i)
This Section Does Not Apply	

Does the Project Include Zonal Systems? (If "Yes", see NRCC-PRF-MCH-DETAILS for system information)	No
Does the Project Include a Solar Hot Water System? (If "Yes", see NRCC-PRF-MCH-DETAILS for system information)	No
Multifamily or Hotel/ Motel Occupancy? (If "Yes", see NRCC-PRF-MCH-DETAILS for DHW system information)	No

Q. INDOOR CONDITIONED LIGHTING GENERAL INFO (see NRCC-PRF-LTI-DETAILS for more info)						§ 140.6	
						Confirmed	
1.	2.	3.	4.	5.		Pass	Fail
Occupancy Type [1]	Conditioned Floor Area [2] (ft²)	Installed Lighting Power (Watts)	Lighting Control Credits (Watts)	Additional (Custom) Allowance			
				Area Category Footnotes (Watts)	Tailored Method (Watts)	☐	☐
Classrooms, Lecture, Training, Vocational Areas	948	480	0	0	0	☐	☐
Building Totals:	948	480		0			

[1] See Table 140.6-C
[2] See NRCC-LTI-01-E for unconditioned spaces

CA Building Energy Efficiency Standards- 2013 Nonresidential Compliance — Report Version: NRCC-PRF-01-E-03232015-717

Project Name:	AMS Modular Classroom 24x40	NRCC-PRF-01-E	Page 11 of 18
Project Address:	CZ 16 Mount Shasta (Worst Case) CZ 16 Mount Shasta	Calculation Date/Time:	17:23, Thu, May 21, 2015
Compliance Scope:	NewComplete	Input File Name:	EP6 AMS 24'x40' for DSA- CZ16.cibd

R. INDOOR CONDITIONED LIGHTING SCHEDULE (Adapted from NRCC-LTI-01-E)[1]							§ 130.0	
Luminaire Schedule (includes all permanent installed lighting in conditioned space, and portable lighting over 0.3 w/ft² in offices)		Installed Watts (Conditioned)					Confirmed	
Name or Item Tag	Complete Luminaire Description (i.e., 3-lamp fluorescent troffer, F32T8, one dimmable electronic ballast)	Watts per luminaire	How Wattage is Determined: CEC Default from NA8	How Wattage is Determined: According to §130.0(c)	Total Number Luminaires	Installed Watts	Pass	Fail
VTLED	A - 60w LED	60	Yes	No	8	480	☐	☐

[1] If lighting power densities were used in the compliance model Building Departments will need to check prescriptive forms for Luminaire Schedule details.

S1. COVERED PROCESS SUMMARY – ENCLOSED PARKING GARAGES	§ 140.9
This Section Does Not Apply	

S2. COVERED PROCESS SUMMARY – COMMERCIAL KITCHENS	§ 140.9
This Section Does Not Apply	

S3. COVERED PROCESS SUMMARY – COMPUTER ROOMS	§ 140.9
This Section Does Not Apply	

S4. COVERED PROCESS SUMMARY – LABORATORY EXHAUSTS	§ 140.9
This Section Does Not Apply	

CA Building Energy Efficiency Standards- 2013 Nonresidential Compliance — Report Version: NRCC-PRF-01-E-03232015-717

Project Name:	AMS Modular Classroom 24x40	NRCC-PRF-01-E	Page 12 of 18
Project Address:	CZ 16 Mount Shasta (Worst Case) CZ 16 Mount Shasta	Calculation Date/Time:	17:23, Thu, May 21, 2015
Compliance Scope:	NewComplete	Input File Name:	EP6 AMS 24'x40' for DSA- CZ16.cibd

DOCUMENTATION AUTHOR'S DECLARATION STATEMENT	§ 10-103
I certify that this Certificate of Compliance documentation is accurate and complete.	
Documentation Author Name: Hans Marsman, LEED AP, CEA, CEPE	Documentation Author Signature:
Company: Brummitt Energy Associates, Inc	Signature Date:
Address: 777 South Highway 101, Suite 203	CEA Identification (If applicable): - specify - CABEC CERTIFIED ENERGY ANALYST — Hans Marsman, cn=Hans Marsman, o=Brummitt Energy, ou, email=hmarsman@brummitt.com, c=US 2015.05.21 17:25:32 -07'00'
City/State/Zip: Solana Beach / CA / 92075	Phone: 619.531.1126 x5
RESPONSIBLE PERSON'S DECLARATION STATEMENT	
I certify the following under penalty of perjury, under the laws of the State of California:	Professional Stamp (optional):
☒ I hereby affirm that I am eligible under the provisions of Division 3 of the Business and Professions Code to sign this document as the person responsible for its preparation; and that I am licensed in the State of California as a civil engineer, mechanical engineer, electrical engineer, or I am a licensed architect.	
☐ I affirm that I am eligible under the provisions of Division 3 of the Business and Professions Code by section 5537.2 or 6737.3 to sign this document as the person responsible for its preparation; and that I am a licensed contractor performing this work.	
☐ I affirm that I am eligible under Division 3 of the Business and Professions Code to sign this document because it pertains to a structure or type of work described as exempt pursuant to Business and Professions Code Sections 5537, 5538 and 6737.1.	
Building Owner's Name: - specify -	Building Owner's Signature:
Address: - specify -	Date Signed:
City/State/Zip: - specify - / - specify - / - specify –	Phone: - specify -
Responsible Architectural Designer Name: Randall P Cavannagh	Responsible Architectural Designer Signature:
Company: American Modular Systems | Gen7 Schools	Date Signed: 05/21/15
Address: 787 Spreckels Avenue	License: C12631
City/State/Zip: Manteca / CA / 95336	Phone: 209.825.1921
Responsible Lighting Designer Name: Randall P Cavannagh	Responsible Lighting Designer Signature:
Company: American Modular Systems | Gen7 Schools	Date Signed: 05/21/15
Address: 787 Spreckels Avenue	License: C12631
City/State/Zip: Manteca / CA / 95336	Phone: 209.825.1921
Responsible Mechanical Designer Name: Randall P Cavannagh	Responsible Mechanical Designer Signature:
Company: American Modular Systems | Gen7 Schools	Date Signed: 05/21/15
Address: 787 Spreckels Avenue	License: C12631
City/State/Zip: Manteca / CA / 95336	Phone: 209.825.1921

CA Building Energy Efficiency Standards- 2013 Nonresidential Compliance — Report Version: NRCC-PRF-01-E-03232015-717

Project Name:	AMS Modular Classroom 24x40	NRCC-PRF-01-E	Page 13 of 18
Project Address:	CZ 16 Mount Shasta (Worst Case) CZ 16 Mount Shasta	Calculation Date/Time:	17:23, Thu, May 21, 2015
Compliance Scope:	NewComplete	Input File Name:	EP6 AMS 24'x40' for DSA- CZ16.cibd

NRCC-PRF-ENV-DETAILS -SECTION START-

A. OPAQUE SURFACE ASSEMBLY DETAILS				Confirmed	
1.	2.	3.	4.	Pass	Fail
Surface Name	Surface Type	Description of Assembly Layers	Notes		
Roof: U 0.70 per EZFrame	Roof	Metal Standing Seam - 1/16 in. Metal framed roof, 24in. OC, 5.5in., R-19 Expanded Polystyrene - EPS - 1/2 in. R2.1 Acoustic Tile - 3/8 in.	Roof: U-factor has been calculated using EZFrame (see EZFrame report)	☐	☐
R-13 in 4 wood frame	ExteriorWall	Wood siding - 1/2 in. Vapor permeable felt - 1/8 in. Wood framed wall, 16in. OC, 3.5in., R-13 Gypsum Board - 1/2 in.		☐	☐
Floor: Conc. Slab	ExteriorFloor	Air - Floor - 3 1/2 in. Concrete - 80 lb/ft3 - 4 in. Carpet - 3/4 in.	Concrete on metal deck floor	☐	☐

B. OVERHANG DETAILS (Adapted from NRCC-ENV-02-E)					Confirmed	
1.	2.	3.		4.	Pass	Fail
Fenestration Tag/ID	Fenestration Orientation	Overhang Dimensions: Horizontal Projection	Overhang Dimensions: Distance Above Window	Side fin: Vertical Projection		
10x8 window OH13	South	3.0 ft.	3.0 ft.	Left: 0 ft., Right: 0 ft.	☐	☐
10x8 window OH15	North	4.0 ft.	4.0 ft.	Left: 0 ft., Right: 0 ft.	☐	☐

CA Building Energy Efficiency Standards- 2013 Nonresidential Compliance — Report Version: NRCC-PRF-01-E-03232015-717

Project Name:	AMS Modular Classroom 24x40	NRCC-PRF-01-E	Page 14 of 18
Project Address:	CZ 16 Mount Shasta (Worst Case) CZ 16 Mount Shasta	Calculation Date/Time:	17:23, Thu, May 21, 2015
Compliance Scope:	NewComplete	Input File Name:	EP6 AMS 24'x40' for DSA- CZ16.cibd

NRCC-PRF-MCH-DETAILS -SECTION START-

A. MECHANICAL VENTILATION AND REHEAT (Adapted from 2013-NRCC-MCH-03-E) — 1. DESIGN AIR FLOWS / 2. VENTILATION (§ 120.1) — Confirmed

CONDITIONED ZONE NAME	HEATING / COOLING SYSTEM ID	DESIGN PRIMARY AIR FLOW (CFM)	DESIGN PRIMARY MINIMUM AIR FLOW (CFM)	MINIMUM PRIMARY AIR FLOW FRACTION	MAXIMUM HEATING AIR FLOW (CFM)	MAXIMUM HEATING AIR FLOW FRACTION	DDC CONTROL (Y/N)	VENT SYSTEM ID	CONDITIONED AREA (ft2)	MIN. VENT PER AREA (CFM/ft2)	DESIGN NUM. OF PEOPLE	MIN. VENT PER PERSON (CFM/person)	REQ'D VENT AIR FLOW (CFM)	DESIGN VENT AIR FLOW (CFM)	TRANSFER AIRFLOW (CFM)	DCV (Y/N)	Pass	Fail
1-Classroom	AC-1	1,875	500	0.27	NA	NA	N	AC-1	948	0.38	47	7	356	356	NA	N	☐	☐
								TOTAL	948		47		356	356	NA		☐	☐

B. ZONAL SYSTEM AND TERMINAL UNIT SUMMARY — § 140.4 — Confirmed

1. System ID	2. System Type	3. Qty	4. Rated Capacity (kBtuh): Heating	4. Rated Capacity (kBtuh): Cooling	5. Economizer	6. Zone Name	7. Airflow (cfm): Design	7. Min.	7. Min. Ratio	8. Fan: BHP	8. Fan: Cycles	8. Fan: ECM Motor	Pass	Fail
Classroom-TRM	VAVNoReheatBox	1	NA	NA	NA	1-Classroom	1875	500	0.27	NA	NA	☐	☐	☐

C. EXHAUST FAN SUMMARY
This Section Does Not Apply

CA Building Energy Efficiency Standards- 2013 Nonresidential Compliance — Report Version: NRCC-PRF-01-E-03232015-717

Project Name:	AMS Modular Classroom 24x40	NRCC-PRF-01-E	Page 15 of 18
Project Address:	CZ 16 Mount Shasta (Worst Case) CZ 16 Mount Shasta	Calculation Date/Time:	17:23, Thu, May 21, 2015
Compliance Scope:	NewComplete	Input File Name:	EP6 AMS 24'x40' for DSA- CZ16.cibd

D. DHW EQUIPMENT SUMMARY – (Adapted from NRCC-PLB-01) — § 110.3 — Confirmed

1. DHW Name	2. Fuel	3. Type	4. Qty	5. Distribution Type	6. Rated Input kBtuh	7. Efficiency	8. Pilot Energy (Btu/h)	9. External Tank Insulation	10. Vol	11. Standby Loss	12. Vol. of Suppl. Storage Tank	Pass	Fail
WH-1 Rheem2	Electricity	Instantaneous	1	Nonrecirculating	15	EF: 0.930	0	NA	3	0	NA	☐	☐

E. MULTI-FAMILY CENTRAL DHW SYSTEM DETAILS
This Section Does Not Apply

F. SOLAR HOT WATER HEATING SUMMARY (Adapted from NRCC-STH-01)
This Section Does Not Apply

G. MECHANICAL HVAC ACCEPTANCE TESTS & FORMS (Adapted from 2013-NRCC-MCH-01-E) — § RA4

Declaration of Required Acceptance Certificates (NRCA) – Acceptance Certificates that may be submitted. (Retain copies and verify forms are completed and signed to post in field for Field Inspector to verify).

Equipment Requiring Testing or Verification	# of units	MCH-02A Outdoor Air	MCH-03A Single Zone Unitary	MCH-04A Air Dist. Ducts	MCH-05A Economizer Controls	MCH-06A DCV	MCH-07A Supply Fan VAV	MCH-08A Valve leakage	MCH-09A Supply Water Temp. Reset	MCH-10A Hyd. Variable Flow Control	MCH-11A Auto Demand Shed Control	MCH-12A FDD for DX Units	MCH-13A Auto FDD for Air & Zone	MCH-14A Dist. Energy Storage DX AC	MCH-15A TES Systems	MCH-16A Supply Air Temp. Reset	MCH-17A Condenser Water Reset Controls	MCH-18A ECMS	Pass	Fail
DHW1 - SHW	1	–	–	–	–	–	–	–	–	–	–	–	–	–	–	–	–	–	☐	☐
AC-1	1	X	–	–	–	–	X	–	–	–	X	–	–	–	–	X	–	–	☐	☐

CA Building Energy Efficiency Standards- 2013 Nonresidential Compliance — Report Version: NRCC-PRF-01-E-03232015-717

Project Name:	AMS Modular Classroom 24x40	NRCC-PRF-01-E	Page 16 of 18
Project Address:	CZ 16 Mount Shasta (Worst Case) CZ 16 Mount Shasta	Calculation Date/Time:	17:23, Thu, May 21, 2015
Compliance Scope:	NewComplete	Input File Name:	EP6 AMS 24'x40' for DSA- CZ16.cibd

NRCC-PRF-LTI-DETAILS -SECTION START-

A. INDOOR CONDITIONED LIGHTING CONTROL CREDITS (Adapted from NRCC-LTI-02-E) — § 140.6

Lighting Control Credits Schedule (includes all lighting controls installed in conditioned space for compliance credit per §140.6(a)2 and Table 140.6-A) — Control Credit Calculation — Confirmed

Location in Building	Occupancy Type (must meet requirements of Table 140.6-A)	Type/Description of Lighting Control (i.e., partial on occupancy sensor, manual dimming, etc.)	# of Units	Watts of Controlled Lighting	Power Adjustment Factor	Control Credit Watts	√ if Acceptance Test Required	Pass	Fail
S-1-Classroom	Classrooms, Lecture, Training, Vocational Areas	- none specified -	1	480	0.00	0		☐	☐

B. INDOOR CONDITIONED LIGHTING MANDATORY LIGHTING CONTROLS (Adapted from NRCC-LTI-02-E)	§ 130.1
This Section Does Not Apply	

§130.1(a) = Manual area controls; §130.1(b) = Multi Level; §130.1(c) = Auto Shut-Off; §130.1(d) = Mandatory Daylight; §130.1(e) = Demand Responsive

C. TAILORED METHOD LIGHTING POWER ALLOWANCE SUMMARY AND CHECKLIST (Adapted from NRCC-LTI-04-E)	§ 140.6
General lighting power (see Table D)	0
General lighting power from special function areas (see Table E)	NA
Additional "use it or lose it" (See Table G)	0
Total watts	0

D. GENERAL LIGHTING POWER (Adapted from NRCC-LTI-04-E)	§ 140.6-D
This Section Does Not Apply	

E. GENERAL LIGHTING FROM SPECIAL FUNCTION AREAS (Adapted from NRCC-LTI-04-E) — § 140.6(c) 3H

Room Number	Primary Function Area	Illuminance Value (LUX)	Room Cavity Ratio (Table G)	Allowed LPD	Floor Area (ft²)	Allowed Watts	Confirmed: Pass	Confirmed: Fail
NA	NA	NA	NA	NA	NA	NA	☐	☐

Note: Tailored Method for Special Function Areas is not currently implemented.

CA Building Energy Efficiency Standards- 2013 Nonresidential Compliance — Report Version: NRCC-PRF-01-E-03232015-717

Project Name:	AMS Modular Classroom 24x40	NRCC-PRF-01-E	Page 17 of 18
Project Address:	CZ 16 Mount Shasta (Worst Case) CZ 16 Mount Shasta	Calculation Date/Time:	17:23, Thu, May 21, 2015
Compliance Scope:	NewComplete	Input File Name:	EP6 AMS 24'x40' for DSA- CZ16.cibd

F. ROOM CAVITY RATIO (Adapted from NRCC-LTI-04-E) — Rectangular Spaces

Room Number	Task/Activity Description	Room Length (ft)	Room Width (ft)	Room Cavity Height (ft)	RCR	Confirmed: Pass	Confirmed: Fail
NA	NA	NA	NA	NA	NA	☐	☐

Non-Rectangular Spaces
This Section Does Not Apply

Note: All applicable spaces are listed under the Non-Rectangular Spaces table

G. ADDITIONAL "USE IT OR LOSE IT" (Adapted from NRCC-LTI-04-E)

1. Wall Display	2. Combined Floor Display and Task Lighting	3. Combined Ornamental and Special Effects Lighting	4. Very Valuable Merchandise	Allowed Watts	Pass	Fail
0	0	0	0	0	☐	☐

5. Wall Display
This Section Does Not Apply

6. Floor Display and Task Lighting
This Section Does Not Apply

7. Combined Ornamental and Special Effects Lighting
This Section Does Not Apply

8. Very Valuable Merchandise
This Section Does Not Apply

CA Building Energy Efficiency Standards- 2013 Nonresidential Compliance — Report Version: NRCC-PRF-01-E-03232015-717

Project Name:	AMS Modular Classroom 24x40	NRCC-PRF-01-E	Page 18 of 18
Project Address:	CZ 16 Mount Shasta (Worst Case) CZ 16 Mount Shasta	Calculation Date/Time:	17:23, Thu, May 21, 2015
Compliance Scope:	NewComplete	Input File Name:	EP6 AMS 24'x40' for DSA- CZ16.cibd

H. INDOOR & OUTDOOR LIGHTING ACCEPTANCE TESTS & FORMS (Adapted from NRCC-LTI-01-E and NRCC-LTO-01-E) — § 130.4

Declaration of Required Acceptance Certificates (NRCA) –Acceptance Certificates that must be verified in the field. (Retain copies and verify forms are completed and signed to post in field for Field Inspector to verify).

Equipment Requiring Testing or Verification	# of units	Indoor: NRCA-LTI-02-A Occ Sensors / Auto Time Switch	Indoor: NRCA-LTI-03-A Auto Daylight	Indoor: NRCA-LTI-04-A Demand Responsive	Outdoor: NRCA-LTO-02-A Outdoor Controls	Confirmed: Pass	Confirmed: Fail
Occupant Sensors	1	☒	☐	☐	☐	☐	☐
Automatic Time Switch	0	☒	☐	☐	☐	☐	☐
Automatic Daylighting	0	☐	☐	☐	☐	☐	☐
Demand Responsive	0	☐	☐	☐	☐	☐	☐
Outdoor Controls	1	☐	☐	☐	☒	☐	☐

CA Building Energy Efficiency Standards- 2013 Nonresidential Compliance — Report Version: NRCC-PRF-01-E-03232015-717

APPROVED
DIVISION OF STATE ARCHITECT
HIGH PERFORMANCE SECTION
APP.# 02-113876 DATE: 6/2/15
C.E.P.E.

02-113876 – 24' x 40' – 120' x 40' EXPOSED STEEL SAVED: 5/21/2015 5:39 PM PLOTTED: 5/22/2015

American Modular Systems
787 Spreckels Ave. Manteca, CA 95336
Phone (209) 825-1921 - Fax (209) 825-7018
americanmodular.com

MODULAR MANUFACTURER PROPRIETARY STATEMENT
THESE DRAWINGS AND THE MATERIAL CONTAINED THEREIN ARE THE PROPERTY OF AMERICAN MODULAR SYSTEMS, INC. (AMS) AND SHALL NOT BE REPRODUCED, COPIED OR OTHERWISE DISPOSED OF DIRECTLY OR INDIRECTLY AND SHALL NOT BE USED IN WHOLE OR IN PART TO ASSIST IN THE MAKING OF OR FOR THE PURPOSE OF FURNISHING ANY INFORMATION FOR THE MAKING OF DRAWINGS, PRINTS, APPARATUS OR PARTS THEREOF WITHOUT THE FULL KNOWLEDGE AND WRITTEN CONSENT OF AMS. ALL PATENTABLE MATERIAL CONTAINED HEREIN AND ORIGINATING WITH AMS SHALL BE THE SOLE PROPERTY OF AMS.

PRE-CHECKED SET NAME
24' x 40' THRU 120' x 40' BUILDINGS

SITE SPECIFIC PROJECT NAME

SHEET TITLE
ENERGY CALCULATIONS

MANUFACTURER PROFESSIONAL OF RECORD ON PC
LICENSED ARCHITECT — RANDALL PATRICK CAVANAGH — No. C12631 — Ren. 03.31.17 — STATE OF CALIFORNIA

PROJECT SPECIFIC STATE AGENCY APPROVAL
IDENTIFICATION STAMP
DIV. OF THE STATE ARCHITECT
02 116495
AC – FLS SS
DATE 12-18-2017

ORIGINAL PC STATE AGENCY APPROVAL
IDENTIFICATION STAMP
DIV. OF THE STATE ARCHITECT
CA. DEPT. OF GENERAL SERVICES
PC 02-113876
AC FLS SS
DATE 6/22/15

PRE-CHECK (PC) DOCUMENT – CODE: 2013 CBC
A SEPARATE PROJECT APPLICATION FOR CONSTRUCTION IS REQUIRED

REVISIONS
1
2
3
4

DRAWN BY:
SCALE: AS NOTED
DATE:
SHEET NUMBER
EN.2

American Modular Systems | Gen7

Performance Runs By Zone & 45° Orientation — **2013 Energy Code**

NOTE: Enter data in colored cells only.			
Project Name:	120' x 40' Modular Classroom	DSA Application #: 0X-XXXXX	
Date of Title 24 Report:	2/4/2015	DSA File No.:	
Model Name and Option:	EP6 AMS 120'x40' for DSA.bld	HVAC Units: Model ID	Efficiency: EER, SEER
Module's Floor Area:	4740	Additional Info.	
Additional Information:		Additional Info.	

Comments: 1. Input data from performance runs in columns 2 and 3 for each climate zone worksheet. Subtract process and receptacle loads
2. Input Module detailed information on Table A - One Spreadsheet Tab per HVAC System (i.e. HP, RTU)

EP6 AMS 120'x40' for DSA.bld — Climate Zone: 14 Reference City: China Lake

Front Orientation	Std Budget kBtu/sf-yr	Prop. Design kBtu/sf-yr	Compliance margin
0	468.10	455.40	2.7%
45	489.30	475.70	2.8%
90	497.00	480.80	3.3%
135	482.10	469.40	2.6%
180	467.30	455.70	2.5%
225	486.20	479.50	1.4%
270	493.80	482.00	2.4%
315	480.70	467.20	2.8%

EP6 AMS 120'x40' for DSA.bld — Climate Zone: 15 Reference City: El Centro

Front Orientation	Std Budget kBtu/sf-yr	Prop. Design kBtu/sf-yr	Compliance margin
0	507.40	492.20	3.0%
45	524.20	507.40	3.2%
90	527.80	512.20	3.0%
135	514.00	501.10	2.5%
180	505.10	492.20	2.6%
225	523.90	509.60	2.7%
270	528.70	512.70	3.0%
315	515.20	501.20	2.7%

EP6 AMS 120'x40' for DSA.bld — Climate Zone: 16 Reference City: Mount Shasta

Front Orientation	Std Budget kBtu/sf-yr	Prop. Design kBtu/sf-yr	Compliance margin
0	426.50	393.00	7.9%
45	441.80	406.70	7.9%
90	445.70	409.60	8.1%
135	430.80	399.50	7.3%
180	423.60	393.80	7.0%
225	438.30	407.20	7.1%
270	442.10	410.40	7.2%
315	428.80	399.30	6.9%

Table A - Module Information per HVAC system. Climate Zones: 1 thru 16 (if different, use another tab)

Envelope: Insulation Types	Insulation R Values	
Roof, Type 1	Standing Seam	
Roof, Type 2		
Wall, Type 1	R-13	
Wall, Type 2	Option: R-13 batt + R-5 c.i.	
Floor, Type 1	Concrete Slab above	
Floor, Type 2		
Glazing: Typical Glass Type	Open	Fixed
U-Factor:	0.78 (NFRC)	
RSHGC:	0.43 SHGC (NFRC)	
VT:	37%	
HVAC Units: Model ID	Efficiency: EER, SEER	
Bard S49H1 (SPVU) - 5 ton	10.4 EER (12.3 SEER)	
Bard S49H1 (SPVU) - 5 ton	3.2 COP (7.7 HSPF)	

Notes:
When a unique PC design contains multiple sizes, the smallest and the largest potential size should be modeled at 30 compass intervals in each Climate Zone for which the PC seeks approval.
The electronically-generated computer file(s) that produced the worst case energy use results for each climate zone for each unique PC design configuration that is modeled should be provided to DSA.

Brummitt Energy Associates, Inc. — www.brummitt.com

Project Name:	AMS Modular Classroom 120x40	NRCC-PRF-01-E	Page 1 of 20
Project Address:	CZ 14 China Lake - 90 deg CZ 14	Calculation Date/Time:	17:14, Thu, May 21, 2015
Compliance Scope:	NewComplete	Input File Name:	EP6 AMS 120'x40' for DSA - CZ14.cibd

A. PROJECT GENERAL INFORMATION

1.	Project Location (city)	CZ 14	7.	# of dwelling units	0
2.	CA Zip Code		8.	Compliance Software (version)	CBECC-Com 2013-3b (717)
3.	Climate Zone	14	9.	Building Orientation (deg)	(S) 225 deg
4.	Total Conditioned Floor Area	4,740 ft²	10.	Permitted Scope of Work	NewComplete
5.	Total Unconditioned Floor Area	0 ft²	11.	Building Type(s)	Nonresidential
6.	# of Stories (Habitable Above Grade)	1			

B. COMPLIANCE RESULTS FOR PERFORMANCE COMPONENTS § 140.1

BUILDING COMPLIES

1. Energy Component	2. Standard Design (TDV)	3. Proposed Design (TDV)	4. Compliance Margin (TDV)	5. Percent Better than Standard
Space Heating	16.9	46.7	-29.8	-176.3%
Space Cooling	175.1	206.4	-31.3	-17.9%
Indoor Fans	148.8	61.4	87.4	58.7%
Heat Rejection	--	--	--	--
Pumps & Misc.	--	--	--	--
Domestic Hot Water	18.2	72.9	-54.7	-300.5%
Indoor Lighting	60.6	25.5	35.1	57.9%
COMPLIANCE TOTAL	419.6	412.9	6.7	1.6%
Receptacle	66.6	66.6		0.0%
Process	--	--		--
Process Ltg	--	--		--
TOTAL	486.2	479.5		1.4%

Project Name:	AMS Modular Classroom 120x40	NRCC-PRF-01-E	Page 2 of 20
Project Address:	CZ 14 China Lake - 90 deg CZ 14	Calculation Date/Time:	17:14, Thu, May 21, 2015
Compliance Scope:	NewComplete	Input File Name:	EP6 AMS 120'x40' for DSA - CZ14.cibd

C. PRIORITY PLAN CHECK/ INSPECTION ITEMS (in order of highest to lowest TDV energy savings)

1st	Indoor Fans: Check envelope and mechanical
2nd	Indoor Lighting: Check lighting
3rd	Heat Rejection: Check envelope and mechanical
4th	Pumps & Misc.: Check mechanical
5th	Space Heating: Check envelope and mechanical
6th	Space Cooling: Check envelope and mechanical
7th	Domestic Hot Water: Check mechanical

Compliance Margin By Energy Component (from Table B column 4)

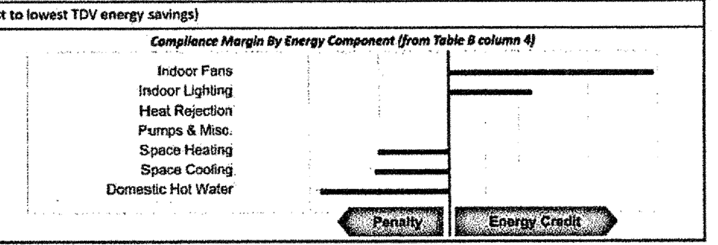

D. EXCEPTIONAL CONDITIONS

The compliance model includes HVAC equipment with capacities that differ from the building plans, presumably to meet unmet load hour requirements. Verify that the equipment in the design provides adequate cooling and heating capacity for the spaces served.

Water heaters have not been sized to meet loads specified in the NACM and may not have adequate capacity.

E. HERS VERIFICATION

This Section Does Not Apply

F. ADDITIONAL REMARKS

None Provided

Project Name:	AMS Modular Classroom 120x40	NRCC-PRF-01-E	Page 3 of 20
Project Address:	CZ 14 China Lake - 90 deg CZ 14	Calculation Date/Time:	17:14, Thu, May 21, 2015
Compliance Scope:	NewComplete	Input File Name:	EP6 AMS 120'x40' for DSA - CZ14.cibd

G. COMPLIANCE PATH & CERTIFICATE OF COMPLIANCE SUMMARY

Identify which building components use the performance or prescriptive path for compliance. "NA"= not in project
For components that utilize the performance path, indicate the sheet number that includes mandatory notes on plans.

Building Component	Compliance Path	Compliance Forms *(required for submittal)*	Location of Mandatory Notes on Plans
Envelope	☒ Performance	NRCC-PRF-ENV-DETAILS (section of the NRCC-PRF-01-E)	
	☐ Prescriptive	NRCC-ENV-01 / 02 / 03 / 04 / 05 / 06-E	
	☐ NA		
Mechanical	☒ Performance	NRCC-PRF-MCH-DETAILS (section of the NRCC-PRF-01-E)	
	☐ Prescriptive	NRCC-MCH-01 / 02 / 03 / 04 / 05 / 06 / 07-E	
	☐ NA		
Domestic Hot Water	☒ Performance	NRCC-PRF-PLB-DETAILS (section of the NRCC-PRF-01-E)	
	☐ Prescriptive	NRCC-PLB-01-E	
	☐ NA		
Lighting (Indoor Conditioned)	☒ Performance	NRCC-PRF-LTI-DETAILS (section of the NRCC-PRF-01-E)	
	☐ Prescriptive	NRCC-LTI-01 / 02 / 03 / 04 / 05-E	
	☐ NA		
Covered Process: Commercial Kitchens	☐ Performance	S2 (section of the NRCC-PRF-01-E)	
	☐ Prescriptive	NRCC-PRC-01/ 03-E	
	☒ NA		
Covered Process: Computer Rooms	☐ Performance	S3 (section of the NRCC-PRF-01-E)	
	☐ Prescriptive	NRCC-PRC-01/ 04-E	
	☒ NA		
Covered Process: Laboratory Exhaust	☐ Performance	S4 (section of the NRCC-PRF-01-E)	
	☐ Prescriptive	NRCC-PRC-01/ 09-E	
	☒ NA		

Project Name:	AMS Modular Classroom 120x40	NRCC-PRF-01-E	Page 4 of 20
Project Address:	CZ 14 China Lake - 90 deg CZ 14	Calculation Date/Time:	17:14, Thu, May 21, 2015
Compliance Scope:	NewComplete	Input File Name:	EP6 AMS 120'x40' for DSA - CZ14.cibd

G. COMPLIANCE PATH & CERTIFICATE OF COMPLIANCE SUMMARY

The following building components are only eligible for prescriptive compliance. Indicate which are relevant to the project.				*The following building components may have mandatory requirements per Part 6. Indicate which are relevant to the project.*			
Yes	NA	Prescriptive Requirement	Compliance Forms	Yes	NA	Mandatory Requirement	Compliance Forms
☐	☒	Lighting (Indoor Unconditioned) §140.6	NRCC-LTI-01 / 02 / 03 / 04 / 05-E	☐ ☐	☒ ☒	Commissioning: §120.8 Simple Systems Complex Systems	NRCC-CXR-01 / 02 / 03 / 05-E NRCC-CXR-01 / 02 / 04 / 05-E
☐	☒	Lighting (Outdoor) §140.7	NRCC-LTO-01 / 02 / 03-E	☐	☒	Electrical: §130.5	NRCC-ELC-01-E
☐	☒	Lighting (Sign) §140.8	NRCC-LTS-01-E	☒	☐	Solar Ready: §110.10	NRCC-SRA-01 / 02-E
☐	☒	Solar Thermal Water Heating: §140.5	NRCC-STH-01-E	☐ ☐ ☐ ☐ ☐	☒ ☒ ☒ ☒ ☒	Covered Process: §120.6 Parking Garage Commercial Refrigeration Warehouse Refrigeration Compressed Air Process Boilers	NRCC-PRC-01-E NRCC-PRC-02-E NRCC-PRC-05-E NRCC-PRC-06/07/08-E NRCC-PRC-10-E NRCC-PRC-11-E

Project Name:	AMS Modular Classroom 120x40	NRCC-PRF-01-E	Page 5 of 20
Project Address:	CZ 14 China Lake - 90 deg CZ 14	Calculation Date/Time:	17:14, Thu, May 21, 2015
Compliance Scope:	NewComplete	Input File Name:	EP6 AMS 120'x40' for DSA - CZ14.cibd

H. CERTIFICATE OF INSTALLATION, CERTIFICATE OF ACCEPTANCE & CERTIFICATE OF VERIFICATION SUMMARY (NRCI/NRCA/NRCV) –
Documentation Author to indicate which Certificates must be submitted for the features to be recognized for compliance
(Retain copies and verify forms are completed and signed to post in field for Field Inspector to verify).
See Tables G. and H. in MCH and LTI Details Sections for Acceptance Tests and forms by equipment.

Building Component	Compliance Forms *(required for submittal)*	Confirmed Pass	Confirmed Fail
Envelope	☒ NRCI-ENV-01-E - For all buildings	☐	☐
	☐ NRCA-ENV-02-F- NFRC label verification for fenestration	☐	☐
Mechanical	☒ NRCI-MCH-01-E - For all buildings with Mechanical Systems	☐	☐
	☒ NRCA-MCH-02-A- Outdoor Air	☐	☐
	☐ NRCA-MCH-03-A – Constant Volume Single Zone HVAC	☐	☐
	☐ NRCA-MCH-04-H- Air Distribution Duct Leakage	☐	☐
	☐ NRCA-MCH-05-A- Air Economizer Controls	☐	☐
	☐ NRCA-MCH-06-A- Demand Control Ventilation	☐	☐
	☒ NRCA-MCH-07-A – Supply Fan Variable Flow Controls	☐	☐
	☐ NRCA-MCH-08-A- Valve Leakage Test	☐	☐
	☐ NRCA-MCH-09-A – Supply Water Temp Reset Controls	☐	☐
	☐ NRCA-MCH-10-A- Hydronic System Variable Flow Controls	☐	☐
	☐ NRCA-MCH-11-A – Auto Demand Shed Controls	☐	☐
	☐ NRCA-MCH-12-A- Packaged Direct Expansion Units	☐	☐
	☐ NRCA-MCH-13-A- Air Handling Units and Zone Terminal Units	☐	☐
	☐ NRCA-MCH-14-A- Distributed Energy Storage	☐	☐
	☐ NRCA-MCH-15-A – Thermal Energy Storage	☐	☐
	☐ NRCA-MCH-16-A- Supply Air Temp Reset Controls	☐	☐
	☐ NRCA-MCH-17-A – Condensate Water Temp Reset Controls	☐	☐
	☐ NRCA-MCH-18-A- Energy Management Controls Systems	☐	☐
	☐ NRCV-MCH-04-H- Duct Leakage Test	☐	☐

Project Name:	AMS Modular Classroom 120x40	NRCC-PRF-01-E	Page 6 of 20
Project Address:	CZ 14 China Lake - 90 deg CZ 14	Calculation Date/Time:	17:14, Thu, May 21, 2015
Compliance Scope:	NewComplete	Input File Name:	EP6 AMS 120'x40' for DSA - CZ14.cibd

H. CERTIFICATE OF INSTALLATION, CERTIFICATE OF ACCEPTANCE & CERTIFICATE OF VERIFICATION SUMMARY (NRCI/NRCA/NRCV) –
Documentation Author to indicate which Certificates must be submitted for the features to be recognized for compliance
(Retain copies and verify forms are completed and signed to post in field for Field Inspector to verify).
See Tables G. and H. in MCH and LTI Details Sections for Acceptance Tests and forms by equipment.

Building Component	Compliance Forms *(required for submittal)*	Confirmed Pass	Confirmed Fail
Plumbing	☐ NRCI-PLB-01-E - For all buildings with Plumbing Systems	☐	☐
	☐ NRCI-PLB-02-E - required on central systems in high-rise residential, hotel/motel application.	☐	☐
	☐ NRCI-PLB-03-E - Single dwelling unit systems in high-rise residential, hotel/motel application.	☐	☐
	☐ NRCI-PLB-21-E - HERS verified central systems in high-rise residential, hotel/motel application.	☐	☐
	☐ NRCI-PLB-22-E - HERS verified single dwelling unit systems in high-rise residential, hotel/motel application.	☐	☐
	☐ NRCV-PLB-21-H- HERS verified central systems in high-rise residential, hotel/motel application.	☐	☐
	☐ NRCV-PLB-22-H - HERS verified single dwelling unit systems in high-rise residential, hotel/motel application.	☐	☐
	☐ NRCI-STH-01-E - Any solar water heating	☐	☐
Indoor Lighting	☒ NRCI-LTI-01-E - For all buildings	☐	☐
	☐ NRCI-LTI-02-E - Lighting control system, or for an Energy Management Control System (EMCS)	☐	☐
	☐ NRCI-LTI-03-E - Line-voltage track lighting integral current limiter, or for a supplementary overcurrent protection panel used to energize only line-voltage track lighting	☐	☐
	☐ NRCI-LTI-04-E - Two interlocked systems serving an auditorium, a convention center, a conference room, or a theater	☐	☐
	☐ NRCI-LTI-05-E - Lighting Control Credit Power Adjustment Factor (PAF)	☐	☐
	☐ NRCI-LTI-06-E - Additional wattage installed in a video conferencing studio	☐	☐
	☒ NRCA-LTI-02-A - Occupancy sensors and automatic time switch controls.	☐	☐
	☐ NRCA-LTI-03-A - Automatic daylighting controls	☐	☐
	☐ NRCA-LTI-04-A - Demand responsive lighting controls	☐	☐
Outdoor Lighting	☐ NRCI-LTO-01-E – Outdoor Lighting	☐	☐
	☐ NRCI-LTO-01-E- EMCS Lighting Control System	☐	☐
	☐ NRCA-LTO-02-A – Outdoor Lighting Control	☐	☐
Sign Lighting	☐ NRCI-LTS-01-E – Sign Lighting	☐	☐
Electrical	☐ NRCI-ELC-01-E – Electrical Power Distribution	☐	☐
Photovoltaic	☐ NRCI-SPV-01-E Photovoltaic Systems	☐	☐

Project Name:	AMS Modular Classroom 120x40	NRCC-PRF-01-E	Page 7 of 20
Project Address:	CZ 14 China Lake - 90 deg CZ 14	Calculation Date/Time:	17:14, Thu, May 21, 2015
Compliance Scope:	NewComplete	Input File Name:	EP6 AMS 120'x40' for DSA - CZ14.cibd

H. CERTIFICATE OF INSTALLATION, CERTIFICATE OF ACCEPTANCE & CERTIFICATE OF VERIFICATION SUMMARY (NRCI/NRCA/NRCV) –
Documentation Author to indicate which Certificates must be submitted for the features to be recognized for compliance
(Retain copies and verify forms are completed and signed to post in field for Field Inspector to verify).
See Tables G. and H. in MCH and LTI Details Sections for Acceptance Tests and forms by equipment.

Building Component	Compliance Forms *(required for submittal)*	Confirmed Pass	Confirmed Fail
Covered Process	☐ NRCI-PRC-01-E Refrigerated Warehouse	☐	☐
	☐ NRCA-PRC-01-F- Compressed Air Systems	☐	☐
	☐ NRCA-PRC-02-F- Kitchen Exhaust	☐	☐
	☐ NRCA-PRC-03-F- Garage Exhaust	☐	☐
	☐ NRCA-PRC-04-F- Refrigerated Warehouse- Evaporator Fan Motor Controls	☐	☐
	☐ NRCA-PRC-05-F- Refrigerated Warehouse- Evaporative Condenser Controls	☐	☐
	☐ NRCA-PRC-06-F- Refrigerated Warehouse- Air Cooled Condenser Controls	☐	☐
	☐ NRCA-PRC-07F- Refrigerated Warehouse- Variable Speed Compressor	☐	☐
	☐ NRCA-PRC-08-F- Electrical Resistance Underslab Heating System	☐	☐

I. ENVELOPE GENERAL INFORMATION (See NRCC-PRF-ENV-DETAILS for more information)

						Confirmed Pass	Confirmed Fail
1.	Total Conditioned Floor Area	4,740 ft²	5.	Number of Floors Above Grade	1		
2.	Total Unconditioned Floor Area	0 ft²	6.	Number of Floors Below Grade	0		
3.	Addition Conditioned Floor Area	0 ft²					
4.	Addition Unconditioned Floor Area	0 ft²					

7. Opaque Surfaces & Orientation	8. Total Gross Surface Area	9. Total Fenestration Area	10. Window to Wall Ratio	Pass	Fail
North Wall	1,395 ft²	400 ft²	28.7%	☐	☐
East Wall	445 ft²	0 ft²	00.0%	☐	☐
South Wall	1,315 ft²	400 ft²	30.4%	☐	☐
West Wall	445 ft²	0 ft²	00.0%	☐	☐
Total	3,600 ft²	800 ft²	22.2%	☐	☐
Roof	4,740 ft²	0 ft²	00.0%	☐	☐

Project Name:	AMS Modular Classroom 120x40	NRCC-PRF-01-E	Page 8 of 20
Project Address:	CZ 14 China Lake - 90 deg CZ 14	Calculation Date/Time:	17:14, Thu, May 21, 2015
Compliance Scope:	NewComplete	Input File Name:	EP6 AMS 120'x40' for DSA - CZ14.cibd

J. FENESTRATION ASSEMBLY SUMMARY § 110.6

1. Fenestration Assembly Name / Tag or I.D.	2. Fenestration Type	3. Certification Method[1]	4. Assembly Method	5. Area ft²	6. Overall U-factor	7. Overall SHGC	8. Overall VT	Pass	Fail
All Weather 3/16 Grey / 1/8 Clear NFRC	VerticalFenestration	NFRCRated	Manufactured	800	0.78	0.43	0.37	☐	☐

[1] Newly installed fenestration shall have a certified NFRC Label Certificate or use the CEC default tables found in Table 116-A and Table 116B. Site-built fenestration less than 1,000 ft², or more than or equal to 1,000 ft² see Reference Nonresidential Appendix NA6.

Taking compliance credit for fenestration shading devices? (if "Yes", see NRCC-PRF-ENV-DETAILS for more information)	No

K. OPAQUE SURFACE ASSEMBLY SUMMARY § 120.7/ § 140.3

1. Surface Name	2. Surface Type	3. Area (ft²)	4. Framing Type	5. Cavity R-Value	6. Continuous R-Value	7. U-Factor / F-Factor / C-Factor	8. Condition Status	Pass	Fail
Roof: U 0.70 per EZFrame	Roof	4,740	Metal	19	2	U-Factor: 0.071	New	☐	☐
R-13 in 4 wood frame	ExteriorWall	3,600	Wood	13	NA	U-Factor: 0.102	New	☐	☐
Floor: Concr. Slab	ExteriorFloor	4,740	NA	0	NA	U-Factor: 0.210	New	☐	☐

L. ROOFING PRODUCT SUMMARY § 140.3

1. Product Type	2. Product ≥25 lb ft²	3. Aged Solar Reflectance	4. Thermal Emittance	5. SRI	6. Cool Roof Credit	7. CRRC Product ID Number	Pass	Fail
Roof: U 0.70 per EZFrame	No	0.08	0.75	NA	No	NA	☐	☐

Project Name:	AMS Modular Classroom 120x40	NRCC-PRF-01-E	Page 9 of 20
Project Address:	CZ 14 China Lake - 90 deg CZ 14	Calculation Date/Time:	17:14, Thu, May 21, 2015
Compliance Scope:	NewComplete	Input File Name:	EP6 AMS 120'x40' for DSA - CZ14.cibd

M. HVAC SYSTEM SUMMARY (see NRCC-PRF-MCH-DETAILS for more information) § 110.1 / § 110.2

Dry System Equipment [1] (Fan & Economizer info included below in Table N)

1. Equip Name	2. Equip Type	3. System Type (Simple [3] or Complex [4])	4. Qty	5. Total Heating Output (kBtu/h)	6. Supp Heat Source (Y/N)	7. Supp Heat Output (kBtuh)	8. Total Cooling Output (kBtu/h)	9. Efficiency Cooling	9. Efficiency Heating	10. Acceptance Testing Required? (Y/N) [5]	Pass	Fail
AC-1	SZVAVHP	Complex	5	62	No	0	63	SEER-13.0	HSPF-7.7	Yes	☐	☐
AC-1 2	SZVAVHP	Complex	1	62	No	0	63	SEER-13.0	HSPF-7.7	Yes	☐	☐
AC-131	SZVAVHP	Complex	1	62	No	0	63	SEER-13.0	HSPF-7.7	Yes	☐	☐
AC-1 3	SZVAVHP	Complex	1	62	No	0	63	SEER-13.0	HSPF-7.7	Yes	☐	☐
AC-1 4	SZVAVHP	Complex	1	62	No	0	63	SEER-13.0	HSPF-7.7	Yes	☐	☐

Wet System Equipment [2] / Pumps

11. Equip Name	12. Equip Type	13. Qty	14. Vol (gal)	15. Rated Capacity (kBtu/h)	16. Efficiency	17. Standby Loss	18. Tank Ext. R Value	19. Qty	20. GPM	21. HP	22. VSD (Y/N)	Pass	Fail
WH-1 Rheem	Instantaneous	1	1	15	EF: 0.930	NA	NA	NA	NA	NA	No	☐	☐

[1] Dry System Equipment includes furnaces, air handling units, heat pumps, etc.
[2] Wet System Equipment includes boilers, chillers, cooling towers, water heaters, etc.
[3] Simple Systems must complete NRCC-CXR-03-E commissioning design review form
[4] Complex Systems must complete NRCC-CXR-04-E commissioning design review form
[5] A summary of which acceptance tests are applicable is provided in NRCC-PRF-MCH-DETAILS

Discrepancy between modeled and designed equipment sizing? (if "Yes", see Table F. "Additional Remarks" for an explanation)	Yes

N. ECONOMIZER & FAN SYSTEMS SUMMARY[1] § 140.4

1. Equip Name	2. Outside Air CFM	3. Supply Fan CFM	Supply Fan HP	Supply Fan BHP	Supply Fan TSP (inch WC)	Supply Fan Control	4. Return Fan CFM	Return Fan HP	Return Fan BHP	Return Fan TSP (inch WC)	Return Fan Control	5. Economizer Type (if present)	Pass	Fail
AC-1	71	2000	0.750	NA	1.43	VariableSpeedDrive	NA	NA	NA	NA	NA	NoEconomizer	☐	☐

APPROVED
DIVISION OF STATE ARCHITECT
HIGH PERFORMANCE SECTION
APP.# 02-113876 DATE: 6/2/15
Lydia Barnes C.E.P.E.

American Modular Systems
787 Spreckels Ave. Manteca, CA 95336
Phone (209) 825-1921 - Fax (209) 825-7018
americanmodular.com

MODULAR MANUFACTURER PROPRIETARY STATEMENT

THESE DRAWINGS AND THE MATERIAL CONTAINED THEREIN ARE THE PROPERTY OF AMERICAN MODULAR SYSTEMS, INC. (AMS) AND SHALL NOT BE REPRODUCED, COPIED OR OTHERWISE DISPOSED OF DIRECTLY OR INDIRECTLY AND SHALL NOT BE USED IN WHOLE OR IN PART TO ASSIST IN THE MAKING OF OR FOR THE PURPOSE OF FURNISHING ANY INFORMATION FOR THE MAKING OF DRAWINGS, PRINTS, APPARATUS OR PARTS THEREOF WITHOUT THE FULL KNOWLEDGE AND WRITTEN CONSENT OF AMS. ALL PATENTABLE MATERIAL CONTAINED HEREIN AND ORIGINATING WITH AMS SHALL BE THE SOLE PROPERTY OF AMS.

PRE-CHECKED SET NAME

24' x 40' THRU 120' x 40' BUILDINGS

SITE SPECIFIC PROJECT NAME

SHEET TITLE

ENERGY CALCULATIONS

MANUFACTURER PROFESSIONAL OF RECORD ON PC

LICENSED ARCHITECT
RANDALL PATRICK CAVANAGH
No. C12631
Ren. 03-31-17
STATE OF CALIFORNIA

PROJECT SPECIFIC STATE AGENCY APPROVAL

IDENTIFICATION STAMP
DIV. OF THE STATE ARCHITECT
02 116495
AC — FLS SS
DATE 12-18-2017

ORIGINAL PC STATE AGENCY APPROVAL

IDENTIFICATION STAMP
DIV. OF THE STATE ARCHITECT
CA. DEPT. OF GENERAL SERVICES
PC 02-113876
AC FLS SS
DATE 6/22/15

PRE-CHECK (PC) DOCUMENT – CODE: 2013 CBC
A SEPARATE PROJECT APPLICATION FOR CONSTRUCTION IS REQUIRED

REVISIONS

1
2
3
4

DRAWN BY:
SCALE: AS NOTED
DATE:

SHEET NUMBER

EN.3

02-113876 - 24' x 40' - 120' x 40' EXPOSED STEEL SAVED: 5/21/2015 5:39 PM PLOTTED: 5/22/2015

Project Name:	AMS Modular Classroom 120x40	NRCC-PRF-01-E	Page 10 of 20
Project Address:	CZ 14 China Lake - 90 deg CZ 14	Calculation Date/Time:	17:14, Thu, May 21, 2015
Compliance Scope:	NewComplete	Input File Name:	EP6 AMS 120'x40' for DSA - CZ14.cibd

N. ECONOMIZER & FAN SYSTEMS SUMMARY[1] — § 140.4

1.	2.	3.					4.					5.	Confirmed	
Equip Name	Outside Air	Supply Fan					Return Fan					Economizer Type (if present)	Pass	Fail
	CFM	CFM	HP	BHP	TSP (inch WC)	Control	CFM	HP	BHP	TSP (inch WC)	Control			
AC-1 2	356	2000	0.750	NA	1.43	VariableSpeedDrive	NA	NA	NA	NA	NA	NoEconomizer	☐	☐
AC-131	356	2000	0.750	NA	1.43	VariableSpeedDrive	NA	NA	NA	NA	NA	NoEconomizer	☐	☐
AC-1 3	356	2000	0.750	NA	1.43	VariableSpeedDrive	NA	NA	NA	NA	NA	NoEconomizer	☐	☐
AC-1 4	356	2000	0.750	NA	1.43	VariableSpeedDrive	NA	NA	NA	NA	NA	NoEconomizer	☐	☐

[1] *Mechanical ventilation calculations and exhaust fans are included in the NRCC-PRF-MCH-DETAILS section*

O. EQUIPMENT CONTROLS — § 120.2

1.	2.	3.	Confirmed	
Equip Name	Equip Type	Controls	Pass	Fail
AC-1	SZVAVHP	No DCV Controls No Economizer No Supply Air Temp. Control	☐	☐
AC-1 2	SZVAVHP	No DCV Controls No Economizer No Supply Air Temp. Control	☐	☐
AC-131	SZVAVHP	No DCV Controls No Economizer No Supply Air Temp. Control	☐	☐
AC-1 3	SZVAVHP	No DCV Controls No Economizer No Supply Air Temp. Control	☐	☐
AC-1 4	SZVAVHP	No DCV Controls No Economizer No Supply Air Temp. Control	☐	☐
DHW1 - SHW	Service Hot Water, Primary Only	Fixed Temperature Control, No DDC	☐	☐

Project Name:	AMS Modular Classroom 120x40	NRCC-PRF-01-E	Page 11 of 20
Project Address:	CZ 14 China Lake - 90 deg CZ 14	Calculation Date/Time:	17:14, Thu, May 21, 2015
Compliance Scope:	NewComplete	Input File Name:	EP6 AMS 120'x40' for DSA - CZ14.cibd

P. SYSTEM DISTRIBUTION SUMMARY — § 120.4/ § 140.4(i)

This Section Does Not Apply

Does the Project Include Zonal Systems? (If "Yes", see NRCC-PRF-MCH-DETAILS for system information)	No
Does the Project Include a Solar Hot Water System? (If "Yes", see NRCC-PRF-MCH-DETAILS for system information)	No
Multifamily or Hotel/ Motel Occupancy? (If "Yes", see NRCC-PRF-MCH-DETAILS for DHW system information)	No

Q. INDOOR CONDITIONED LIGHTING GENERAL INFO (see NRCC-PRF-LTI-DETAILS for more info) — § 140.6

1.	2.	3.	4.	5.		Confirmed	
Occupancy Type [1]	Conditioned Floor Area [2] (ft²)	Installed Lighting Power (Watts)	Lighting Control Credits (Watts)	Additional (Custom) Allowance		Pass	Fail
				Area Category Footnotes (Watts)	Tailored Method (Watts)	☐	☐
Classrooms, Lecture, Training, Vocational Areas	4,740	2,400	0	0	0	☐	☐
Building Totals:	4,740	2,400		0			

[1] *See Table 140.6-C*
[2] *See NRCC-LTI-01-E for unconditioned spaces*

R. INDOOR CONDITIONED LIGHTING SCHEDULE (Adapted from NRCC-LTI-01-E)[1] — § 130.0

Luminaire Schedule (includes all permanent installed lighting in conditioned space, and portable lighting over 0.3 w/ft² in offices) — Installed Watts (Conditioned)

Name or Item Tag	Complete Luminaire Description (i.e., 3-lamp fluorescent troffer, F32T8, one dimmable electronic ballast)	Watts per luminaire	How Wattage is Determined: CEC Default from NA8	How Wattage is Determined: According to §130.0(c)	Total Number Luminaires	Installed Watts	Confirmed Pass	Confirmed Fail
VTLED	A - 60w LED	60	Yes	No	40	2,400	☐	☐

[1] *If lighting power densities were used in the compliance model Building Departments will need to check prescriptive forms for Luminaire Schedule details.*

S1. COVERED PROCESS SUMMARY – ENCLOSED PARKING GARAGES — § 140.9

This Section Does Not Apply

Project Name:	AMS Modular Classroom 120x40	NRCC-PRF-01-E	Page 12 of 20
Project Address:	CZ 14 China Lake - 90 deg CZ 14	Calculation Date/Time:	17:14, Thu, May 21, 2015
Compliance Scope:	NewComplete	Input File Name:	EP6 AMS 120'x40' for DSA - CZ14.cibd

S2. COVERED PROCESS SUMMARY – COMMERCIAL KITCHENS — § 140.9

This Section Does Not Apply

S3. COVERED PROCESS SUMMARY – COMPUTER ROOMS — § 140.9

This Section Does Not Apply

S4. COVERED PROCESS SUMMARY – LABORATORY EXHAUSTS — § 140.9

This Section Does Not Apply

Project Name:	AMS Modular Classroom 120x40	NRCC-PRF-01-E	Page 13 of 20
Project Address:	CZ 14 China Lake - 90 deg CZ 14	Calculation Date/Time:	17:14, Thu, May 21, 2015
Compliance Scope:	NewComplete	Input File Name:	EP6 AMS 120'x40' for DSA - CZ14.cibd

DOCUMENTATION AUTHOR'S DECLARATION STATEMENT — § 10-103

I certify that this Certificate of Compliance documentation is accurate and complete.

Documentation Author Name: Hans Marsman, CEA, CEPE, LEED AP BD+C	Documentation Author Signature:
Company: Brummitt Energy Associates, Inc	Signature Date:
Address: 777 South Highway 101, Suite 203	CEA Identification (If applicable): Senior Energy Analyst — CABEC Hans Marsman, cn=Hans Marsman, o=Brummitt Energy, ou, email=hmarsman@brummitt.com, c=US 2015.05.21 17:17:48 -07'00'
City/State/Zip: Solana Beach / California / 92075	Phone: 619.531.1126

RESPONSIBLE PERSON'S DECLARATION STATEMENT

I certify the following under penalty of perjury, under the laws of the State of California: — Professional Stamp (optional):

- ☒ I hereby affirm that I am eligible under the provisions of Division 3 of the Business and Professions Code to sign this document as the person responsible for its preparation; and that I am licensed in the State of California as a civil engineer, mechanical engineer, electrical engineer, or I am a licensed architect.
- ☐ I affirm that I am eligible under the provisions of Division 3 of the Business and Professions Code by section 5537.2 or 6737.3 to sign this document as the person responsible for its preparation; and that I am a licensed contractor performing this work.
- ☐ I affirm that I am eligible under Division 3 of the Business and Professions Code to sign this document because it pertains to a structure or type of work described as exempt pursuant to Business and Professions Code Sections 5537, 5538 and 6737.1.

Building Owner's Name: - specify -	Building Owner's Signature:
Address: - specify -	Date Signed:
City/State/Zip: - specify - / - specify - / - specify -	Phone: - specify -
Responsible Architectural Designer Name: Randall P Cavannagh	Responsible Architectural Designer Signature: [signature]
Company: American Modular Systems | Gen7 Schools	Date Signed: 05/21/15
Address: 787 Spreckels Avenue	License: C12631
City/State/Zip: Manteca / CA / 95336	Phone: 209.825.1921
Responsible Lighting Designer Name: Randall P Cavannagh	Responsible Lighting Designer Signature: [signature]
Company: American Modular Systems | Gen7 Schools	Date Signed: 05/21/15
Address: 787 Spreckels Avenue	License: C12631
City/State/Zip: Manteca / CA / 95336	Phone: 209.825.1921
Responsible Mechanical Designer Name: Randall P Cavannagh	Responsible Mechanical Designer Signature: [signature]
Company: American Modular Systems | Gen7 Schools	Date Signed: 05/21/15
Address: 787 Spreckels Avenue	License: C12631
City/State/Zip: Manteca / CA / 95336	Phone: 209.825.1921

Project Name:	AMS Modular Classroom 120x40	NRCC-PRF-01-E	Page 14 of 20
Project Address:	CZ 14 China Lake - 90 deg CZ 14	Calculation Date/Time:	17:14, Thu, May 21, 2015
Compliance Scope:	NewComplete	Input File Name:	EP6 AMS 120'x40' for DSA - CZ14.cibd

NRCC-PRF-ENV-DETAILS -SECTION START-

A. OPAQUE SURFACE ASSEMBLY DETAILS

1.	2.	3.	4.	Confirmed	
Surface Name	Surface Type	Description of Assembly Layers	Notes	Pass	Fail
Roof: U 0.70 per EZFrame	Roof	Metal Standing Seam - 1/16 in. Metal framed roof, 24in. OC, 5.5in., R-19 Expanded Polystyrene - EPS - 1/2 in. R2.1 Acoustic Tile - 3/8 in.		☐	☐
R-13 in 4 wood frame	ExteriorWall	Stucco - 7/8 in. Vapor permeable felt - 1/8 in. Wood framed wall, 16in. OC, 3.5in., R-13 Gypsum Board - 1/2 in.		☐	☐
Floor: Concr. Slab	ExteriorFloor	Air - Floor - 3 1/2 in. Concrete - 140 lb/ft3 - 4 in. Carpet - 3/4 in.		☐	☐

B. OVERHANG DETAILS (Adapted from NRCC-ENV-02-E)

1.	2.	3.		4.	Confirmed	
Fenestration Tag/ID	Fenestration Orientation	Overhang Dimensions: Horizontal Projection	Overhang Dimensions: Distance Above Window	Side fin: Vertical Projection	Pass	Fail
10x8 window OH13	South	3.0 ft.	2.0 ft.	Left: 0 ft., Right: 0 ft.	☐	☐
10x8 window OH15	North	4.0 ft.	2.0 ft.	Left: 0 ft., Right: 0 ft.	☐	☐
10x8 window OH26	South	3.0 ft.	2.0 ft.	Left: 0 ft., Right: 0 ft.	☐	☐
10x8 window OH28	North	4.0 ft.	2.0 ft.	Left: 0 ft., Right: 0 ft.	☐	☐
10x8 window OH36	South	3.0 ft.	2.0 ft.	Left: 0 ft., Right: 0 ft.	☐	☐
10x8 window OH38	North	4.0 ft.	2.0 ft.	Left: 0 ft., Right: 0 ft.	☐	☐
10x8 window OH46	South	3.0 ft.	2.0 ft.	Left: 0 ft., Right: 0 ft.	☐	☐
10x8 window OH48	North	4.0 ft.	2.0 ft.	Left: 0 ft., Right: 0 ft.	☐	☐
10x8 window OH57	South	3.0 ft.	2.0 ft.	Left: 0 ft., Right: 0 ft.	☐	☐
10x8 window OH59	North	4.0 ft.	2.0 ft.	Left: 0 ft., Right: 0 ft.	☐	☐

Project Name:	AMS Modular Classroom 120x40	NRCC-PRF-01-E	Page 15 of 20
Project Address:	CZ 14 China Lake - 90 deg CZ 14	Calculation Date/Time:	17:14, Thu, May 21, 2015
Compliance Scope:	NewComplete	Input File Name:	EP6 AMS 120'x40' for DSA - CZ14.cibd

NRCC-PRF-MCH-DETAILS -SECTION START-

A. MECHANICAL VENTILATION AND REHEAT *(Adapted from 2013-NRCC-MCH-03-E)*

	1. DESIGN AIR FLOWS							2. VENTILATION (§ 120.1)									Confirmed	
CONDITIONED ZONE NAME	HEATING / COOLING SYSTEM ID	DESIGN PRIMARY AIR FLOW (CFM)	DESIGN PRIMARY MINIMUM AIR FLOW (CFM)	MINIMUM PRIMARY AIR FLOW FRACTION	MAXIMUM HEATING AIR FLOW (CFM)	MAXIMUM HEATING AIR FLOW FRACTION	DDC CONTROL (Y/N)	VENT SYSTEM ID	CONDITIONED AREA (ft2)	MIN. VENT PER AREA (CFM/ft2)	DESIGN NUM. OF PEOPLE	MIN. VENT PER PERSON (CFM/person)	REQ'D VENT AIR FLOW (CFM)	DESIGN VENT AIR FLOW (CFM)	TRANSFER AIRFLOW (CFM)	DCV (Y/N)	Pass	Fail
1-Classroom	AC-1	2,000	500	0.25	NA	NA	N	AC-1	948	0.38	47	7	356	356	NA	N	☐	☐
2-Classroom	AC-1 2	2,000	500	0.25	NA	NA	N	AC-1 2	948	0.38	47	7	356	356	NA	N	☐	☐
3-Classroom	AC-131	2,000	500	0.25	NA	NA	N	AC-131	948	0.38	47	7	356	356	NA	N	☐	☐
4-Classroom	AC-1 3	2,000	500	0.25	NA	NA	N	AC-1 3	948	0.38	47	7	356	356	NA	N	☐	☐
5-Classroom	AC-1 4	2,000	500	0.25	NA	NA	N	AC-1 4	948	0.38	47	7	356	356	NA	N	☐	☐
								TOTAL	4,740		235		1,780	1,780	NA		☐	☐

B. ZONAL SYSTEM AND TERMINAL UNIT SUMMARY — § 140.4

1.	2.	3.	4.		5.	6.	7.			8.			Confirmed	
System ID	System Type	Qty	Rated Capacity (kBtuh): Heating	Rated Capacity (kBtuh): Cooling	Economizer	Zone Name	Airflow (cfm): Design	Airflow (cfm): Min.	Airflow (cfm): Min. Ratio	Fan: BHP	Fan: Cycles	Fan: ECM Motor	Pass	Fail
Classroom5-TRM	VAVNoReheatBox	5	NA	NA	NA	1-Classroom	2000	500	0.25	NA	NA	☐	☐	☐
Classroom22-TRM	VAVNoReheatBox	1	NA	NA	NA	2-Classroom	2000	500	0.25	NA	NA	☐	☐	☐
Classroom32-TRM	VAVNoReheatBox	1	NA	NA	NA	3-Classroom	2000	500	0.25	NA	NA	☐	☐	☐
Classroom42-TRM	VAVNoReheatBox	1	NA	NA	NA	4-Classroom	2000	500	0.25	NA	NA	☐	☐	☐
Classroom52-TRM	VAVNoReheatBox	1	NA	NA	NA	5-Classroom	2000	500	0.25	NA	NA	☐	☐	☐

Project Name:	AMS Modular Classroom 120x40	NRCC-PRF-01-E	Page 16 of 20
Project Address:	CZ 14 China Lake - 90 deg CZ 14	Calculation Date/Time:	17:14, Thu, May 21, 2015
Compliance Scope:	NewComplete	Input File Name:	EP6 AMS 120'x40' for DSA - CZ14.cibd

C. EXHAUST FAN SUMMARY

This Section Does Not Apply

D. DHW EQUIPMENT SUMMARY – *(Adapted from NRCC-PLB-01)* — § 110.3

1.	2.	3.	4.	5.	6.	7.	8.	9.	10.	11.	12.	Confirmed	
DHW Name	Fuel	Type	Qty	Distribution Type	Rated Input kBtuh	Efficiency	Pilot Energy (Btu/h)	External Tank Insulation	Vol	Standby Loss	Vol. of Suppl. Storage Tank	Pass	Fail
WH-1 Rheem	Electricity	Instantaneous	1	Nonrecirculating	15	EF: 0.930	0	NA	1	0	NA	☐	☐

E. MULTI-FAMILY CENTRAL DHW SYSTEM DETAILS

This Section Does Not Apply

F. SOLAR HOT WATER HEATING SUMMARY (Adapted from NRCC-STH-01)

This Section Does Not Apply

G. MECHANICAL HVAC ACCEPTANCE TESTS & FORMS *(Adapted from 2013-NRCC-MCH-01-E)* — § RA4

Declaration of Required Acceptance Certificates (NRCA) – Acceptance Certificates that may be submitted. (Retain copies and verify forms are completed and signed to post in field for Field Inspector to verify).

Test Description		MCH-02A	MCH-03A	MCH-04A	MCH-05A	MCH-06A	MCH-07A	MCH-08A	MCH-09A	MCH-10A	MCH-11A	MCH-12A	MCH-13A	MCH-14A	MCH-15A	MCH-16A	MCH-17A	MCH-18A	Confirmed	
Equipment Requiring Testing or Verification	# of units	Outdoor Air	Single Zone Unitary	Air Dist. Ducts	Economizer Controls	DCV	Supply Fan VAV	Valve leakage	Supply Water Temp. Reset	Hyd. Variable Flow Control	Auto Demand Shed Control	FDD for DX Units	Auto FDD for Air & Zone	Dist. Energy Storage DX AC	TES Systems	Supply Air Temp. Reset	Condenser Water Reset Controls	ECMS	Pass	Fail
DHW1 - SHW	1	–	–	–	–	–	–	–	–	–	–	–	–	–	–	–	–	–	☐	☐
AC-1	5	X	–	–	–	–	X	–	–	–	X	–	–	–	–	X	–	–	☐	☐

Project Name:	AMS Modular Classroom 120x40	NRCC-PRF-01-E	Page 17 of 20
Project Address:	CZ 14 China Lake - 90 deg CZ 14	Calculation Date/Time:	17:14, Thu, May 21, 2015
Compliance Scope:	NewComplete	Input File Name:	EP6 AMS 120'x40' for DSA - CZ14.cibd

G. MECHANICAL HVAC ACCEPTANCE TESTS & FORMS *(Adapted from 2013-NRCC-MCH-01-E)* — § RA4

Declaration of Required Acceptance Certificates (NRCA) – Acceptance Certificates that may be submitted. (Retain copies and verify forms are completed and signed to post in field for Field Inspector to verify).

Test Description		MCH-02A	MCH-03A	MCH-04A	MCH-05A	MCH-06A	MCH-07A	MCH-08A	MCH-09A	MCH-10A	MCH-11A	MCH-12A	MCH-13A	MCH-14A	MCH-15A	MCH-16A	MCH-17A	MCH-18A	Confirmed	
Equipment Requiring Testing or Verification	# of units	Outdoor Air	Single Zone Unitary	Air Dist. Ducts	Economizer Controls	DCV	Supply Fan VAV	Valve leakage	Supply Water Temp. Reset	Hyd. Variable Flow Control	Auto Demand Shed Control	FDD for DX Units	Auto FDD for Air & Zone	Dist. Energy Storage DX AC	TES Systems	Supply Air Temp. Reset	Condenser Water Reset Controls	ECMS	Pass	Fail
AC-1 2	1	X	–	–	–	–	X	–	–	–	X	–	–	–	–	X	–	–	☐	☐
AC-131	1	X	–	–	–	–	X	–	–	–	X	–	–	–	–	X	–	–	☐	☐
AC-1 3	1	X	–	–	–	–	X	–	–	–	X	–	–	–	–	X	–	–	☐	☐
AC-1 4	1	X	–	–	–	–	X	–	–	–	X	–	–	–	–	X	–	–	☐	☐

NRCC-PRF-LTI-DETAILS -SECTION START-

A. INDOOR CONDITIONED LIGHTING CONTROL CREDITS (Adapted from NRCC-LTI-02-E) — § 140.6

Lighting Control Credits Schedule (includes all lighting controls installed in conditioned space for compliance credit per §140.6(a)2 and Table 140.6-A) — Control Credit Calculation

Location in Building	Occupancy Type (must meet requirements of Table 140.6-A)	Type/Description of Lighting Control (i.e., partial on occupancy sensor, manual dimming, etc.)	# of Units	Watts of Controlled Lighting	Power Adjustment Factor	Control Credit Watts	√ If Acceptance Test Required	Pass	Fail
S-1-Classroom	Classrooms, Lecture, Training, Vocational Areas	- none specified -	1	480	0.00	0		☐	☐
S-2-Classroom	Classrooms, Lecture, Training, Vocational Areas	- none specified -	1	480	0.00	0		☐	☐
S-3-Classroom	Classrooms, Lecture, Training, Vocational Areas	- none specified -	1	480	0.00	0		☐	☐

Project Name:	AMS Modular Classroom 120x40	NRCC-PRF-01-E	Page 18 of 20
Project Address:	CZ 14 China Lake - 90 deg CZ 14	Calculation Date/Time:	17:14, Thu, May 21, 2015
Compliance Scope:	NewComplete	Input File Name:	EP6 AMS 120'x40' for DSA - CZ14.cibd

A. INDOOR CONDITIONED LIGHTING CONTROL CREDITS (Adapted from NRCC-LTI-02-E) — § 140.6

Lighting Control Credits Schedule (includes all lighting controls installed in conditioned space for compliance credit per §140.6(a)2 and Table 140.6-A) — Control Credit Calculation

Location in Building	Occupancy Type (must meet requirements of Table 140.6-A)	Type/Description of Lighting Control (i.e., partial on occupancy sensor, manual dimming, etc.)	# of Units	Watts of Controlled Lighting	Power Adjustment Factor	Control Credit Watts	√ If Acceptance Test Required	Pass	Fail
S-4-Classroom	Classrooms, Lecture, Training, Vocational Areas	- none specified -	1	480	0.00	0		☐	☐
S-5-Classroom	Classrooms, Lecture, Training, Vocational Areas	- none specified -	1	480	0.00	0		☐	☐

B. INDOOR CONDITIONED LIGHTING MANDATORY LIGHTING CONTROLS (Adapted from NRCC-LTI-02-E) — § 130.1

This Section Does Not Apply

§130.1(a) = Manual area controls; §130.1(b) = Multi Level; §130.1(c) = Auto Shut-Off; §130.1(d) = Mandatory Daylight; §130.1(e) = Demand Responsive

C. TAILORED METHOD LIGHTING POWER ALLOWANCE SUMMARY AND CHECKLIST (Adapted from NRCC-LTI-04-E) — § 140.6

General lighting power (see Table D)	0
General lighting power from special function areas (see Table E)	NA
Additional "use it or lose it" (See Table G)	0
Total watts	0

D. GENERAL LIGHTING POWER (Adapted from NRCC-LTI-04-E) — § 140.6-D

This Section Does Not Apply

E. GENERAL LIGHTING FROM SPECIAL FUNCTION AREAS (Adapted from NRCC-LTI-04-E) — § 140.6(c) 3H

Room Number	Primary Function Area	Illuminance Value (LUX)	Room Cavity Ratio (Table G)	Allowed LPD	Floor Area (ft²)	Allowed Watts	Confirmed Pass	Confirmed Fail
NA	NA	NA	NA	NA	NA	NA	☐	☐

Note: Tailored Method for Special Function Areas is not currently implemented

APPROVED
DIVISION OF STATE ARCHITECT
HIGH PERFORMANCE SECTION
APP.# 02-113876 DATE: 6/2/15
Lydia Barni C.E. P.E.

American Modular Systems
787 Spreckels Ave. Manteca, CA 95336
Phone (209) 825-1921 - Fax (209) 825-7018
americanmodular.com

MODULAR MANUFACTURER PROPRIETARY STATEMENT

THESE DRAWINGS AND THE MATERIAL CONTAINED THEREIN ARE THE PROPERTY OF AMERICAN MODULAR SYSTEMS, INC. (AMS) AND SHALL NOT BE REPRODUCED, COPIED OR OTHERWISE DISPOSED OF DIRECTLY OR INDIRECTLY AND SHALL NOT BE USED IN WHOLE OR IN PART TO ASSIST IN THE MAKING OF OR FOR THE PURPOSE OF FURNISHING ANY INFORMATION FOR THE MAKING OF DRAWINGS, PRINTS, APPARATUS OR PARTS THEREOF WITHOUT THE FULL KNOWLEDGE AND WRITTEN CONSENT OF AMS. ALL PATENTABLE MATERIAL CONTAINED HEREIN AND ORIGINATING WITH AMS SHALL BE THE SOLE PROPERTY OF AMS.

PRE-CHECKED SET NAME

24' x 40' THRU 120' x 40' BUILDINGS

SITE SPECIFIC PROJECT NAME

SHEET TITLE

ENERGY CALCULATIONS

MANUFACTURER PROFESSIONAL OF RECORD ON PC

LICENSED ARCHITECT — RANDALL PATRICK CAVANAGH — No. C12631 — Ren. 03.31.17 — STATE OF CALIFORNIA

PROJECT SPECIFIC STATE AGENCY APPROVAL

IDENTIFICATION STAMP
DIV. OF THE STATE ARCHITECT
02 116495
AC – FLS SS
DATE 12-18-2017

ORIGINAL PC STATE AGENCY APPROVAL

IDENTIFICATION STAMP
DIV. OF THE STATE ARCHITECT
CA. DEPT. OF GENERAL SERVICES
PC 02-113876
AC FLS SS
DATE 6/22/15

PRE-CHECK (PC) DOCUMENT – CODE: 2013 CBC
A SEPARATE PROJECT APPLICATION FOR CONSTRUCTION IS REQUIRED

REVISIONS

1
2
3
4

DRAWN BY:
SCALE: AS NOTED
DATE:

SHEET NUMBER

EN.4

02-113876 – 24' x 40' – 120' x 40' EXPOSED STEEL SAVED: 5/21/2015 5:39 PM PLOTTED: 5/22/2015

Project Name:	AMS Modular Classroom 120x40	NRCC-PRF-01-E	Page 19 of 20
Project Address:	CZ 14 China Lake - 90 deg CZ 14	Calculation Date/Time:	17:14, Thu, May 21, 2015
Compliance Scope:	NewComplete	Input File Name:	EP6 AMS 120'x40' for DSA - CZ14.cibd

F. ROOM CAVITY RATIO (Adapted from NRCC-LTI-04-E)

Rectangular Spaces						
Room Number	Task/Activity Description	Room Length (ft)	Room Width (ft)	Room Cavity Height (ft)	RCR	Con[firmed] Pass
NA	NA	NA	NA	NA	NA	☐

Non-Rectangular Spaces

This Section Does Not Apply

Note: All applicable spaces are listed under the Non-Rectangular Spaces table

G. ADDITIONAL "USE IT OR LOSE IT" (Adapted from NRCC-LTI-04-E)

1.	2.	3.	4.		Confirmed
Wall Display	Combined Floor Display and Task Lighting	Combined Ornamental and Special Effects Lighting	Very Valuable Merchandise	Allowed Watts	Pass
0	0	0	0	0	☐

5. Wall Display

This Section Does Not Apply

6. Floor Display and Task Lighting

This Section Does Not Apply

7. Combined Ornamental and Special Effects Lighting

This Section Does Not Apply

8. Very Valuable Merchandise

This Section Does Not Apply

Project Name:	AMS Modular Classroom 120x40	NRCC-PRF-01-E	Page 20 of 20
Project Address:	CZ 14 China Lake - 90 deg CZ 14	Calculation Date/Time:	17:14, Thu, May 21, 2015
Compliance Scope:	NewComplete	Input File Name:	EP6 AMS 120'x40' for DSA - CZ14.cibd

H. INDOOR & OUTDOOR LIGHTING ACCEPTANCE TESTS & FORMS (Adapted from NRCC-LTI-01-E and NRCC-LTO-01-E) § 130.4

Declaration of Required Acceptance Certificates (NRCA) –Acceptance Certificates that must be verified in the field. (Retain copies and verify forms are completed and signed to post in field for Field Inspector to verify).

Test Description		Indoor			Outdoor	Confirmed	
		NRCA-LTI-02-A	NRCA-LTI-03-A	NRCA-LTI-04-A	NRCA-LTO-02-A		
Equipment Requiring Testing or Verification	# of units	Occ Sensors / Auto Time Switch	Auto Daylight	Demand Responsive	Outdoor Controls	Pass	Fail
Occupant Sensors	0	☒	☐	☐	☐	☐	☐
Automatic Time Switch	0	☒	☐	☐	☐	☐	☐
Automatic Daylighting	0	☐	☐	☐	☐	☐	☐
Demand Responsive	0	☐	☐	☐	☐	☐	☐
Outdoor Controls	0	☐	☐	☐	☐	☐	☐

STATE OF CALIFORNIA
OUTDOOR LIGHTING
CEC-NRCC-LTO-01-E (Revised 06/14) CALIFORNIA ENERGY COMMISSION

CERTIFICATE OF COMPLIANCE	NRCC-LTO-01-E
Outdoor Lighting	(Page 1 of 4)
Project Name: AMS Modular Classroom 24'x40' (for DSA)	Date Prepared: 12/12/2014

Project Address: CZ 15 El Centro - 90 deg CZ 15 El Centro, CA	Total Illuminated Hardscape Area 0

General Information
Phase of Construction: ☒ New Construction ☐ Addition ☐ Alteration
Outdoor Lighting Zone (OLZ) ☐ OLZ-1 ☐ OLZ-2 ☒ OLZ-3 ☐ OLZ-4
I have confirmed with the AHJ which OLZ applies to this site. For default lighting zone designations, see Title 24 Part 6, §10-114

LIGHTING COMPLIANCE DOCUMENTS (check box for each document included)

For detailed instructions on the use of this and all Energy Efficiency Standards compliance documents, refer to the Nonresidential Manual published by the California Energy Commission.

☒	NRCC-LTO-01-E	Certificate of Compliance
☐	NRCC-LTO-02-E	Outdoor Lighting Controls Certificate of Compliance
☐	NRCC-LTO-03-E	Outdoor Lighting Power Allowance Certificate of Compliance

Summary of Allowed Outdoor Lighting Power			Watts
1.	Sum Total ALLOWED Outdoor Lighting Wattage from NRCC-LTO-03-E, page 1	=	14
	Complies ONLY if Installed ≤ Allowed		↕
2.	Sum Total INSTALLED Outdoor lighting Wattage from NRCC-LTO-01-E, page 3		14

Declaration of Required Installation Certificates – Declare by checking all Installation Certificates that will be submitted. (Retain copies and verify forms are completed and signed.)
☒ NRCI-LTO-01-E - Must be submitted for all buildings ☐ Field Inspector
☒ NRCI-LTO-02-E - Must be submitted for a lighting control system, or for an Energy Management Control System (EMCS), to be recognized for compliance. ☐ Field Inspector
Declaration of Required Certificates of Acceptance – Declare by checking all of the Certificates of Acceptance that will be submitted. (Retain copies and verify forms are completed and signed.)
☒ NRCA-LTO-02-A - Must be submitted for outdoor lighting controls. ☐ Field Inspector

STATE OF CALIFORNIA
OUTDOOR LIGHTING
CEC-NRCC-LTO-01-E (Revised 06/14) CALIFORNIA ENERGY COMMISSION

CERTIFICATE OF COMPLIANCE	NRCC-LTO-01-E
Outdoor Lighting	(Page 2 of 4)
Project Name: AMS Modular Classroom 24'x40' (for DSA)	Date Prepared: 12/12/2014

Schedule of luminaires exempt from the outdoor lighting power requirements in §140.7

Name or Symbol	Description of exempt luminaire in accordance with the exemptions

Schedule of luminaires exempt from the cutoff requirements in §130.2(b)

Name or Symbol	Description of exempt luminaire in accordance with the exemptions

Schedule of luminaires exempt from the outdoor lighting control requirements in §130.2(c)

Name or Symbol	Description of exempt luminaire in accordance with the exemptions

STATE OF CALIFORNIA
OUTDOOR LIGHTING
CEC-NRCC-LTO-01-E (Revised 06/14) CALIFORNIA ENERGY COMMISSION

CERTIFICATE OF COMPLIANCE	NRCC-LTO-01-E
Outdoor Lighting	(Page 3 of 4)
Project Name: AMS Modular Classroom 24'x40' (for DSA)	Date Prepared: 12/12/2014

A. OUTDOOR LIGHTING SCHEDULE and FIELD INSPECTION ENERGY CHECKLIST

Luminaire Schedule		Installed Watts					Location	Cutoff	Field Inspector	
A	B	C	D		E	F	G	H	I	
			How wattage was determined							
Name or Item Tag	Complete Luminaire Description	Watts per Luminaire	CEC Default from NA8	According to §130.0(c)	Number of Luminaires	Total Installed Watts in this area (C x E)	Primary Function area in which these luminaires are installed	BUG Rating	Pass	Fail
ISC	ISC LED 2 Light Bar	14.0	☒	☐	1	14	Main Entrance		☐	☐
			☐	☐					☐	☐
			☐	☐					☐	☐
			☐	☐					☐	☐
			☐	☐					☐	☐
			☐	☐					☐	☐
			☐	☐					☐	☐
			☐	☐					☐	☐
			☐	☐					☐	☐
			☐	☐					☐	☐
			☐	☐					☐	☐
			☐	☐					☐	☐
			☐	☐					☐	☐
			☐	☐					☐	☐
			☐	☐					☐	☐
			☐	☐					☐	☐
			☐	☐					☐	☐
			☐	☐					☐	☐
			☐	☐					☐	☐
			☐	☐					☐	☐
					INSTALLED WATTS PAGE TOTAL:	14	Enter sum total of all pages (Sum Total INSTALLED Outdoor lighting wattage) into NRCC-LTO-01-E; Page 1		14	

STATE OF CALIFORNIA
OUTDOOR LIGHTING
CEC-NRCC-LTO-01-E (Revised 06/14) CALIFORNIA ENERGY COMMISSION

CERTIFICATE OF COMPLIANCE	NRCC-LTO-01-E
Outdoor Lighting	(Page 4 of 4)
Project Name: AMS Modular Classroom 24'x40' (for DSA)	Date Prepared: 12/12/2014

DOCUMENTATION AUTHOR'S DECLARATION STATEMENT
1. I certify that this Certificate of Compliance documentation is accurate and complete.

Documentation Author Name:	Hans Marsman	Documentation Author Signature:	H Marsman
Company:	Brummitt Energy Associates, Inc	Signature Date:	12/12/2014
Address:	2171 India Street, Suite B	CEA/ HERS Certification Identification (if applicable):	CABEC
City/State/Zip:	San Diego, California 92101	Phone:	619.531.1126

RESPONSIBLE PERSON'S DECLARATION STATEMENT
I certify the following under penalty of perjury, under the laws of the State of California:
1. The information provided on this Certificate of Compliance is true and correct.
2. I am eligible under Division 3 of the Business and Professions Code to accept responsibility for the building design or system design identified on this Certificate of Compliance (responsible designer).
3. The energy features and performance specifications, materials, components, and manufactured devices for the building design or system design identified on this Certificate of Compliance conform to the requirements of Title 24, Part 1 and Part 6 of the California Code of Regulations.
4. The building design features or system design features identified on this Certificate of Compliance are consistent with the information provided on other applicable compliance documents, worksheets, calculations, plans and specifications submitted to the enforcement agency for approval with this building permit application.
5. I will ensure that a completed signed copy of this Certificate of Compliance shall be made available with the building permit(s) issued for the building, and made available to the enforcement agency for all applicable inspections. I understand that a completed signed copy of this Certificate of Compliance is required to be included with the documentation the builder provides to the building owner at occupancy.

Responsible Designer Name:	Randall P Cavannagh	Responsible Designer Signature:	Randall Cavanagh
Company:	American Modular Systems | Gen7 School	Date Signed:	05/21/15
Address:	787 Spreckels Avenue	License:	C12631
City/State/Zip:	Manteca, CA 95336	Phone:	209.825.1921

STATE OF CALIFORNIA
OUTDOOR LIGHTING CONTROLS
CEC-NRCC-LTO-02-E (Revised 06/14) CALIFORNIA ENERGY COMMISSION

CERTIFICATE OF COMPLIANCE	NRCC-LTO-02-E
Outdoor Lighting Controls	(Page 1 of 3)
Project Name: AMS Modular Classroom 24'x40' (for DSA)	Date Prepared: 12/12/2014

The NRCC-LTO-02-E shall be used to document all mandatory outdoor lighting controls that are applicable to the project.

Mandatory Outdoor Lighting Control Declaration Statements
Check all that apply:
- ☑ Lighting shall be controlled by self-contained lighting control devices which are certified to the Energy Commission according to the Title 20 Appliance Efficiency Regulations in accordance with §110.9.
- ☐ Lighting shall be controlled by a lighting control system or energy management control system in accordance with §110.9. An Installation Certificate shall be submitted in accordance with §130.4(b).
- ☑ All lighting controls and equipment shall comply with the applicable requirements in §110.9 and shall be installed in accordance with the manufacturer's instructions in accordance with §130.1
- ☐ Part-Night Outdoor Lighting Controls, as defined in Section 100.1, shall meet the requirements in Section 110.9(b)5
- ☐ All outdoor incandescent luminaires rated over 100 watts, determined in accordance with Section 130.0(c), shall be controlled by a motion sensor.
- ☐ All outdoor luminaires rated for use with lamps greater than 150 lamp watts, determined in accordance with Section 130.0(c), shall comply with Backlight, Uplight, and Glare (collectively referred to as "BUG") in accordance with Section 130.2(b)
- ☑ All installed outdoor lighting shall be controlled by a photocontrol or outdoor astronomical time-switch control in accordance with Section 130.2(c)1
- ☐ All installed outdoor lighting shall be circuited and independently controlled from other electrical loads by an automatic scheduling control in accordance with Section 130.2(c)2
- ☑ All installed outdoor lighting, where the bottom of the luminaire is mounted 24 feet or less above the ground, shall be controlled with automatic lighting controls in accordance with Section 130.2(c)3
- ☐ For Outdoor Sales Frontage, Outdoor Sales Lots, and Outdoor Sales Canopies lighting, an automatic lighting control in accordance with Section 130.2(c)4
- ☐ For Building Facade, Ornamental Hardscape and Outdoor Dining lighting, an automatic lighting control in accordance with Section 130.2(c)5
- ☑ Before an occupancy permit is granted for a newly constructed building or area, or a new lighting system serving a building, area, or site is operated for normal use, indoor lighting controls serving the building, area, or site shall be certified as meeting the Acceptance Requirements for Code Compliance in accordance with §130.4.(a). Outdoor lighting controls shall comply with the applicable requirements of Section 130.2(c) and Reference Nonresidential Appendix NA7.8

STATE OF CALIFORNIA
OUTDOOR LIGHTING CONTROLS
CEC-NRCC-LTO-02-E (Revised 06/14) CALIFORNIA ENERGY COMMISSION

CERTIFICATE OF COMPLIANCE	NRCC-LTO-02-E
Outdoor Lighting Controls	(Page 2 of 3)
Project Name: AMS Modular Classroom 24'x40' (for DSA)	Date Prepared: 12/12/2014

MANDATORY OUTDOOR LIGHTING CONTROL SCHEDULE and FIELD INSPECTION CHECKLIST

Outdoor Lighting Control Schedule			Standards Complying With [1] (✓ all that apply, or enter 'E' if Exempted)						✓ if Acceptance Test Required	Field Inspector	
A	B	C	D	E	F	G	H	I	N	O	
Location and Application of Luminaires being controlled	Type/ Description of Lighting Control (i.e. motion sensor, photocontrol, outdoor astronomical time-switch control, centralized time-based zone lighting control)	# of Units	§130.2(a)	§130.2(c)1	§130.2(c)2	§130.2(c)3	§130.2(c)4	§130.2(c)5		Pass	Fail
Wall Mtd LED @ entry	Photocontrol	1	E	✓	✓	E	E	E		☐	☐
										☐	☐
										☐	☐
										☐	☐
										☐	☐
										☐	☐
										☐	☐
										☐	☐
										☐	☐
										☐	☐
										☐	☐
										☐	☐
										☐	☐
										☐	☐
										☐	☐
										☐	☐
										☐	☐

STATE OF CALIFORNIA
OUTDOOR LIGHTING CONTROLS
CEC-NRCC-LTO-02-E (Revised 06/14) CALIFORNIA ENERGY COMMISSION

CERTIFICATE OF COMPLIANCE	NRCC-LTO-02-E
Outdoor Lighting Controls	(Page 3 of 3)
Project Name: AMS Modular Classroom 24'x40' (for DSA)	Date Prepared: 12/12/2014

DOCUMENTATION AUTHOR'S DECLARATION STATEMENT
1. I certify that this Certificate of Compliance documentation is accurate and complete.

Documentation Author Name:	Hans Marsman	Documentation Author Signature:	H Marsman
Company:	Brummitt Energy Associates, Inc	Signature Date:	12/12/2014
Address:	2171 India Street, Suite B	CEA/ HERS Certification Identification (if applicable):	CABEC
City/State/Zip:	San Diego, California 92101	Phone:	619.531.1126

RESPONSIBLE PERSON'S DECLARATION STATEMENT
I certify the following under penalty of perjury, under the laws of the State of California:
1. The information provided on this Certificate of Compliance is true and correct.
2. I am eligible under Division 3 of the Business and Professions Code to accept responsibility for the building design or system design identified on this Certificate of Compliance (responsible designer).
3. The energy features and performance specifications, materials, components, and manufactured devices for the building design or system design identified on this Certificate of Compliance conform to the requirements of Title 24, Part 1 and Part 6 of the California Code of Regulations.
4. The building design features or system design features identified on this Certificate of Compliance are consistent with the information provided on other applicable compliance documents, worksheets, calculations, plans and specifications submitted to the enforcement agency for approval with this building permit application.
5. I will ensure that a completed signed copy of this Certificate of Compliance shall be made available with the building permit(s) issued for the building, and made available to the enforcement agency for all applicable inspections. I understand that a completed signed copy of this Certificate of Compliance is required to be included with the documentation the builder provides to the building owner at occupancy.

Responsible Designer Name:	Randall P Cavannagh	Responsible Designer Signature:	Randall Cavanagh
Company:	American Modular Systems | Gen7 Schc	Date Signed:	05/21/15
Address:	787 Spreckels Avenue	License:	C12631
City/State/Zip:	Manteca, CA 95336	Phone:	209.825.1921

STATE OF CALIFORNIA
INDOOR LIGHTING
CEC-NRCC-LTI-01-E (Revised 06/14) CALIFORNIA ENERGY COMMISSION

CERTIFICATE OF COMPLIANCE – USER INSTRUCTIONS	NRCC-LTI-01-E
Indoor Lighting	(Page 1 of 5)
Project Name: AMS Modular Classroom 24'x40' (for DSA)	Date Prepared: 5/21/2015

Climate Zone: 15	Conditioned Floor Area : 0
	Unconditioned Floor Area : 473

General Information

Building Type: ☐ Schools	☐ Nonresidential ☐ Relocatable Public Schools	☐ High-Rise Residential ☐ Conditioned Spaces	☐ Hotel/Motel ☒ Unconditioned Spaces
Phase of Construction:	☒ New Construction	☐ Addition	☐ Alteration
Method of Compliance:	☐ Complete Building	☒ Area Category	☐ Tailored

LIGHTING COMPLIANCE DOCUMENTS (select yes for each document included)

For detailed instructions on the use of this and all Energy Efficiency Standards compliance documents, refer to the Nonresidential Manual published by the California Energy Commission.

YES	NO	FORM	TITLE
YES		NRCC-LIT-01-E	Certificate of Compliance. All Pages required on plans for all submittals.
YES		NRCC-LIT-02-E	Lighting Controls, Certificate of Compliance, and PAF Calculation. All Pages required on plans for all submittals.
YES		NRCC-LIT-03-E	Indoor Lighting Power Allowance
	NO	NRCC-LIT-04-E	Tailored Method Worksheets
	NO	NRCC-LIT-05-E	Line Voltage Track Lighting Worksheets

Summary of Allowed Lighting Power
Conditioned and Unconditioned space Lighting must not be combined for compliance

Indoor Lighting Power for Conditioned Spaces			Watts	Indoor Lighting Power for Unconditioned Spaces		Watts
1.	Installed Lighting NRCC-LTI-01-E, page 4	+	0	Installed Lighting NRCC-LTI-01-E, page 4	+	280
2.	PORTABLE ONLY FOR OFFICES NRCC-LTI-01-E, page 3	+				
3.	Minus Lighting Control Credits NRCC-LTI-02-E, page 2	-	0	Minus Lighting Control Credits NRCC-LTI-02-E, page 2	-	0
4.	Adjusted Installed Lighting Power (row 1 plus row 2 minus row 3)	=	0	Adjusted Installed Lighting Power (row 1 minus row 3)	=	280

APPROVED
DIVISION OF STATE ARCHITECT
HIGH PERFORMANCE SECTION
APP.# 02-113876 DATE: 6/2/15
Lydia Bain, C.E.P.E.

American Modular Systems
787 Spreckels Ave. Manteca, CA 95336
Phone (209) 825-1921 - Fax (209) 825-7018
americanmodular.com

MODULAR MANUFACTURER PROPRIETARY STATEMENT

THESE DRAWINGS AND THE MATERIAL CONTAINED THEREIN ARE THE PROPERTY OF AMERICAN MODULAR SYSTEMS, INC. (AMS) AND SHALL NOT BE REPRODUCED, COPIED OR OTHERWISE DISPOSED OF DIRECTLY OR INDIRECTLY AND SHALL NOT BE USED IN WHOLE OR IN PART TO ASSIST IN THE MAKING OF OR FOR THE PURPOSE OF FURNISHING ANY INFORMATION FOR THE MAKING OF DRAWINGS, PRINTS, APPARATUS OR PARTS THEREOF WITHOUT THE FULL KNOWLEDGE AND WRITTEN CONSENT OF AMS. ALL PATENTABLE MATERIAL CONTAINED HEREIN AND ORIGINATING WITH AMS SHALL BE THE SOLE PROPERTY OF AMS.

PRE-CHECKED SET NAME

24' x 40' THRU 120' x 40' BUILDINGS

SITE SPECIFIC PROJECT NAME

SHEET TITLE

ENERGY CALCULATIONS

MANUFACTURER PROFESSIONAL OF RECORD ON PC

LICENSED ARCHITECT
RANDALL PATRICK CAVANAGH
No. C12631
Ren. 03.31.17
STATE OF CALIFORNIA

PROJECT SPECIFIC STATE AGENCY APPROVAL

IDENTIFICATION STAMP
DIV. OF THE STATE ARCHITECT
02 116495
AC — FLS SS
DATE 12-18-2017

ORIGINAL PC STATE AGENCY APPROVAL

IDENTIFICATION STAMP
DIV. OF THE STATE ARCHITECT
CA. DEPT. OF GENERAL SERVICES
PC 02-113876
AC FLS SS
DATE 6/22/15

PRE-CHECK (PC) DOCUMENT – CODE: 2013 CBC
A SEPARATE PROJECT APPLICATION FOR CONSTRUCTION IS REQUIRED

REVISIONS
1
2
3
4

DRAWN BY:
SCALE: AS NOTED
DATE:

SHEET NUMBER

EN.5

02-113876 – 24' x 40' – 120' x 40' EXPOSED STEEL SAVED: 5/21/2015 5:39 PM PLOTTED: 5/22/2015

STATE OF CALIFORNIA
INDOOR LIGHTING
CEC-NRCC-LTI-01-E (Revised 06/14) — CALIFORNIA ENERGY COMMISSION

CERTIFICATE OF COMPLIANCE – USER INSTRUCTIONS	NRCC-LTI-01-E
Indoor Lighting	(Page 2 of 5)
Project Name: AMS Modular Classroom 24'x40' (for DSA)	Date Prepared: 5/21/2015

5.	Complies ONLY if Installed ≤ Allowed		Complies ONLY if Installed ≤ Allowed	
6.	Allowed Lighting Power Conditioned NRCC-LTI-03-E, page 1	0	Allowed Lighting Power Unconditioned NRCC-LTI-03-E, page 1	296

Declaration of Required Installation Certificates – Declare by selecting yes for all Installation Certificates that will be submitted. (Retain copies and verify forms are completed and signed.)

YES	NO	Form/Title	
✓		NRCI-LTI-01-E - Must be submitted for all buildings	☐ Field Inspector
		NRCI-LTI-02-E - Must be submitted for a lighting control system, or for an Energy Management Control System (EMCS), to be recognized for compliance.	☐ Field Inspector
		NRCI-LTI-03-E - Must be submitted for a line-voltage track lighting integral current limiter, or for a supplementary overcurrent protection panel used to energize only line-voltage track lighting, to be recognized for compliance.	☐ Field Inspector
		NRCI-LTI-04-E - Must be submitted for two interlocked systems serving an auditorium, a convention center, a conference room, a multipurpose room, or a theater to be recognized for compliance.	☐ Field Inspector
		NRCI-LTI-05-E - Must be submitted for a Power Adjustment Factor (PAF) to be recognized for compliance.	☐ Field Inspector
		NRCI-LTI-06-E - Must be submitted for additional wattage installed in a video conferencing studio to be recognized for compliance.	☐ Field Inspector

Declaration of Required Certificates of Acceptance – Declare by checking all of the Certificates of Acceptance that will be submitted. (Retain copies and verify forms are completed and signed.)

YES	NO	Form/Title	
✓		NRCA-LTI-02-A - Must be submitted for occupancy sensors and automatic time switch controls.	☐ Field Inspector
✓		NRCA-LTI-03-A - Must be submitted for automatic daylight controls.	☐ Field Inspector
		NRCA-LTI-04-A - Must be submitted for demand responsive lighting controls.	☐ Field Inspector

STATE OF CALIFORNIA
INDOOR LIGHTING
CEC-NRCC-LTI-01-E (Revised 06/14) — CALIFORNIA ENERGY COMMISSION

CERTIFICATE OF COMPLIANCE – USER INSTRUCTIONS	NRCC-LTI-01-E
Indoor Lighting	(Page 3 of 5)
Project Name: AMS Modular Classroom 24'x40' (for DSA)	Date Prepared: 5/21/2015

A separate Lighting Schedule Must Be Filled Out for Conditioned and Unconditioned Spaces. Installed Lighting Power listed on this Lighting Schedule is only for:
☒ CONDITIONED SPACE ☐ UNCONDITIONED SPACE

A. INDOOR LIGHTING SCHEDULE and FIELD INSPECTION ENERGY CHECKLIST
- ☐ The actual indoor lighting power listed on this page and on the next page includes all installed permanent and planned portable lighting systems.
- ☐ When Complete Building Method is used for compliance, list each different type of luminaire on separate lines.
- ☐ When Area Category Method or Tailored Method is used for compliance, list each different type of luminaire by each different function area on separate lines
- ☐ Also include track lighting in schedule, and submit the track lighting compliance form (NRCC-LTI-05-E) when line-voltage track lighting is installed.

B. Installed Portable Luminaires in Offices – Exception to Section 140.6(a)
- ☐ This section shall be filled out ONLY for portable luminaires in offices (As defined in §100.1). All other planned portable luminaires shall be documented on next page of this compliance form.
- ☐ This section is used to determine if greater than 0.3 watts of portable lighting is planned for any office
- ☐ Fill out a separate line for each different office. Small offices that are typical (having the same general and portable lighting) may be grouped together. This allowance shall not be traded between offices having different lighting systems.

Office Portable Luminaire Schedule	Office Installed Portable Luminaire Watts Per Square Foot						Accountable Watts	Office Location	Field Inspector	
A	B	C	D	E	F	G	H	I	J	
Complete Luminaire Description (i.e., LED, under cabinet, furniture mounted direct/indirect)	Watts per Luminaire	Number of Luminaires	Installed portable luminaire watts in this office (B x C)	Square feet of this office	Watts per square foot (D / E)	If F ≤ 0.3, enter zero; If F > 0.3, (F-0.3)	E x G	Identify Office area in which these portable luminaires are installed	Pass	Fail
									☐	☐
									☐	☐
									☐	☐
									☐	☐
									☐	☐
Total installed portable luminaire watts that are greater than 0.3 watts per square foot per office:								Enter sum total of all pages into NRCC-LTI-01-E; Page 1		

STATE OF CALIFORNIA
INDOOR LIGHTING
CEC-NRCC-LTI-01-E (Revised 06/14) — CALIFORNIA ENERGY COMMISSION

CERTIFICATE OF COMPLIANCE – USER INSTRUCTIONS	NRCC-LTI-01-E
Indoor Lighting	(Page 4 of 5)
Project Name: AMS Modular Classroom 24'x40' (for DSA)	Date Prepared: 5/21/2015

A separate Lighting Schedule Must Be Filled Out for Conditioned and Unconditioned Spaces. Installed Lighting Power listed on this Lighting Schedule is only for:
☐ CONDITIONED SPACE ☒ UNCONDITIONED SPACE

C. INDOOR LIGHTING SCHEDULE and FIELD INSPECTION ENERGY CHECKLIST

Luminaire Schedule		Installed Watts					Location	Field Inspector[1]	
A	B	C	D		E	F	G	H	
Name or Item Tag	Complete Luminaire Description (i.e. 3 lamp fluorescent troffer, F32T8, one dimmable electronic ballast)	Watts per Luminaire	How wattage was determined: CEC Default from NAB	According to §130.0(c)	Number Luminaires	Total Installed Watts in this area (C x E)	Primary Function area in which these luminaires are installed	Pass	Fail
LED	A - 40w LED	40.0	☒	☐	5	200	Corridor/Restroom/Support	☐	☐
Wall mou	Incandescent	40.0	☒	☐	2	80	Electrical, Mechanical Room	☐	☐
			☐	☐				☐	☐
			☐	☐				☐	☐
			☐	☐				☐	☐
			☐	☐				☐	☐
			☐	☐				☐	☐
			☐	☐				☐	☐
			☐	☐				☐	☐
INSTALLED WATTS PAGE TOTAL:						280	Enter sum total of all pages into NRCC-LTI-01-E; Page 2		

STATE OF CALIFORNIA
INDOOR LIGHTING
CEC-NRCC-LTI-01-E (Revised 06/14) — CALIFORNIA ENERGY COMMISSION

CERTIFICATE OF COMPLIANCE – USER INSTRUCTIONS	NRCC-LTI-01-E
Indoor Lighting	(Page 5 of 5)
Project Name: AMS Modular Classroom 24'x40' (for DSA)	Date Prepared: 5/21/2015

DOCUMENTATION AUTHOR'S DECLARATION STATEMENT
1. I certify that this Certificate of Compliance documentation is accurate and complete.

Documentation Author Name: Hans Marsman, CEA, CEPE, LEED AP BD+C	Documentation Author Signature: H Marsman
Company: Brummitt Energy Associates, Inc	Signature Date: 5/21/2015
Address: 777 South Highway 101, Suite 203	CEA/ HERS Certification Identification (if applicable): CABEC
City/State/Zip: Solana Beach, California 92075	Phone: 619.531.1126

RESPONSIBLE PERSON'S DECLARATION STATEMENT
I certify the following under penalty of perjury, under the laws of the State of California:
1. The information provided on this Certificate of Compliance is true and correct.
2. I am eligible under Division 3 of the Business and Professions Code to accept responsibility for the building design or system design identified on this Certificate of Compliance (responsible designer).
3. The energy features and performance specifications, materials, components, and manufactured devices for the building design or system design identified on this Certificate of Compliance conform to the requirements of Title 24, Part 1 and Part 6 of the California Code of Regulations.
4. The building design features or system design features identified on this Certificate of Compliance are consistent with the information provided on other applicable compliance documents, worksheets, calculations, plans and specifications submitted to the enforcement agency for approval with this building permit application.
5. I will ensure that a completed signed copy of this Certificate of Compliance shall be made available with the building permit(s) issued for the building, and made available to the enforcement agency for all applicable inspections. I understand that a completed signed copy of this Certificate of Compliance is required to be included with the documentation the builder provides to the building owner at occupancy.

Responsible Designer Name: Randall P Cavannagh	Responsible Designer Signature:
Company: American Modular Systems | Gen7 Schools	Date Signed:
Address: 787 Spreckels Avenue	License: C12631
City/State/Zip: Manteca, CA 95336	Phone: 209.825.1921

STATE OF CALIFORNIA
INDOOR LIGHTING – LIGHTING CONTROLS
CEC-NRCC-LTI-02-E (Revised 06/14) — CALIFORNIA ENERGY COMMISSION

CERTIFICATE OF COMPLIANCE	NRCC-LTI-02-E
Indoor Lighting - Lighting Controls	(Page 1 of 3)
Project Name: AMS Modular Classroom 24'x40' (for DSA)	Date Prepared: 5/21/2015

The NRCC-LTI-02-E shall be used to document all mandatory and prescriptive lighting controls that are applicable to the project.

Mandatory Lighting Control Declaration Statements (Indicate if the measure applies by checking yes or no below.)

YES	NO	Control Requirements
✓		Lighting shall be controlled by self-contained lighting control devices which are certified to the Energy Commission according to the Title 20 Appliance Efficiency Regulations in accordance with Section 110.9.
	✓	Lighting shall be controlled by a lighting control a system or energy management control system in accordance with §110.9. An Installation Certificate shall be submitted in accordance with Section 130.4(b).
	✓	One or more Track Lighting Integral Current Limiters shall be installed which have been certified to the Energy Commission in accordance with §110.9 and §130.0. Additionally, an Installation Certificate shall be submitted in accordance with Section 130.4(b).
	✓	A Track Lighting Supplementary Overcurrent Protection Panel shall be installed in accordance with Section 110.9 and Section 130.0. Additionally, an Installation Certificate shall be installed in accordance with Section 130.4(b).
✓		All lighting controls and equipment shall comply with the applicable requirements in §110.9 and shall be installed in accordance with the manufacturer's instructions in accordance with Section 130.1.
✓		All luminaires shall be functionally controlled with manually switched ON and OFF lighting controls in accordance with Section 130.1(a).
	✓	General lighting shall be separately controlled from all other lighting systems in an area. Floor and wall display, window display, case display, ornamental, and special effects lighting shall each be separately controlled on circuits that are 20 amps or less. When track lighting is used, general, display, ornamental, and special effects lighting shall each be separately controlled; in accordance with Section 130.1(a)4.
✓		The general lighting of any enclosed area 100 square feet or larger, with a connected lighting load that exceeds 0.5 watts per square foot shall meet the multi-level lighting control requirements in accordance with Section 130.1(b).
✓		All installed indoor lighting shall be equipped with controls that meet the applicable Shut-OFF control requirements in Section 130.1(c).
✓		Lighting in all Daylit Zones shall be controlled in accordance with the requirements in Section 130.1(d) and daylit zones are shown on the plans.
	✓	Lighting power in buildings larger than 10,000 square feet shall be capable of being automatically reduced in response to a Demand Responsive Signal in accordance with Section 130.1(e).
✓		Before an occupancy permit is granted for a newly constructed building or area, or a new lighting system serving a building, area, or site is operated for normal use, indoor lighting controls serving the building, area, or site shall be certified as meeting the Acceptance Requirements for Code Compliance in accordance with Section 130.4(a). The controls required to meet the Acceptance Requirements include automatic daylight controls, automatic shut-OFF controls, and demand responsive controls.

STATE OF CALIFORNIA
INDOOR LIGHTING – LIGHTING CONTROLS
CEC-NRCC-LTI-02-E (Revised 06/14) — CALIFORNIA ENERGY COMMISSION

CERTIFICATE OF COMPLIANCE	NRCC-LTI-02-E
Indoor Lighting - Lighting Controls	(Page 2 of 3)
Project Name: AMS Modular Classroom 24'x40' (for DSA)	Date Prepared: 5/21/2015

A separate document must be filled out for Conditioned and Unconditioned Spaces. This page is used only for the following:
☐ CONDITIONED SPACES ☒ UNCONDITIONED SPACES

MANDATORY AND PRESCRIPTIVE INDOOR LIGHTING CONTROL SCHEDULE, PAF CALCULATION, and FIELD INSPECTION CHECKLIST

Lighting Control Schedule			Standards Complying With[1] (✓ all that apply, or enter 'E' if Exempted)							PAF Credit Calculation[2]			✓ if Acceptance Test Required	Field Inspector	
A	B	C	D	E	F	G	H	I	J	K	L	M	N	O	
Location in Building	Type/ Description of Lighting Control (i.e.: occupancy sensor, automatic time switch, dimmer, automatic daylight, etc...)	# of Units	§130.1(a)	§130.0(b)	§130.1(c)	§130.1(d)	§130.1(e)	§140.6(a)2	§140.6(d)	Watts of Controlled Lighting	PAF	Control Credit (K x L)		Pass	Fail
Restrooms (per RR)	Switches	1	✓	E		E	E	N/A						☐	☐
	Occupancy Sensors	1			✓			N/A						☐	☐
														☐	☐
														☐	☐
														☐	☐
														☐	☐
														☐	☐
Control Credit PAGE TOTAL (Sum of Column M):												0			
IF MULTIPLE PAGES ARE USED, ENTER SUM TOTAL OF Control Credit for all pages HERE (Sum of all Column M):												0			
												Enter Control Credit total into NRCC-LTI-01-E; Page 1.			

1. §130.1(a) = Manual area controls; §130.0(b) = Multi Level; §130.1(c) = Auto Shut-Off; §130.1(d) = Mandatory Daylight; §130.1(e) = Demand Responsive; §140.6(d) = Additional lighting controls installed to earn a PAF; §140.6(d) = Prescriptive Secondary Sidelit Daylight Controls.
2. Check Table 140.6-A for correct Factor. PAFs shall not be traded between conditioned and unconditioned spaces. As a condition to earn a PAF, an Installation Certificate is also required to be filled out, signed, and submitted.

STATE OF CALIFORNIA
INDOOR LIGHTING – LIGHTING CONTROLS
CEC-NRCC-LTI-02-E (Revised 06/14) — CALIFORNIA ENERGY COMMISSION

CERTIFICATE OF COMPLIANCE	NRCC-LTI-02-E
Indoor Lighting - Lighting Controls	(Page 3 of 3)
Project Name: AMS Modular Classroom 24'x40' (for DSA)	Date Prepared: 5/21/2015

DOCUMENTATION AUTHOR'S DECLARATION STATEMENT
1. I certify that this Certificate of Compliance documentation is accurate and complete.

Documentation Author Name: Hans Marsman, CEA, CEPE, LEED AP BD+C	Documentation Author Signature: H Marsman
Company: Brummitt Energy Associates, Inc	Signature Date: 5/21/2015
Address: 777 South Highway 101, Suite 203	CEA/ HERS Certification Identification (if applicable): CABEC
City/State/Zip: Solana Beach, California 92075	Phone: 619.531.1126

RESPONSIBLE PERSON'S DECLARATION STATEMENT
I certify the following under penalty of perjury, under the laws of the State of California:
1. The information provided on this Certificate of Compliance is true and correct.
2. I am eligible under Division 3 of the Business and Professions Code to accept responsibility for the building design or system design identified on this Certificate of Compliance (responsible designer).
3. The energy features and performance specifications, materials, components, and manufactured devices for the building design or system design identified on this Certificate of Compliance conform to the requirements of Title 24, Part 1 and Part 6 of the California Code of Regulations.
4. The building design features or system design features identified on this Certificate of Compliance are consistent with the information provided on other applicable compliance documents, worksheets, calculations, plans and specifications submitted to the enforcement agency for approval with this building permit application.
5. I will ensure that a completed signed copy of this Certificate of Compliance shall be made available with the building permit(s) issued for the building, and made available to the enforcement agency for all applicable inspections. I understand that a completed signed copy of this Certificate of Compliance is required to be included with the documentation the builder provides to the building owner at occupancy.

Responsible Designer Name: Randall P Cavannagh	Responsible Designer Signature: Randall Cavannagh
Company: American Modular Systems | Gen7 Schools	Date Signed: 05/21/15
Address: 787 Spreckels Avenue	License: C12631
City/State/Zip: Manteca, CA 95336	Phone: 209.825.1921

STATE OF CALIFORNIA
INDOOR LIGHTING POWER ALLOWANCE
CEC-NRCC-LTI-03-E (Revised 06/14) — CALIFORNIA ENERGY COMMISSION

CERTIFICATE OF COMPLIANCE	NRCC-LTI-03-E
Certificate of Compliance - Indoor Lighting Power Allowance	(Page 1 of 4)
Project Name: AMS Modular Classroom 24'x40' (for DSA)	Date Prepared: 5/21/2015

ALLOWED LIGHTING POWER
A separate page must be filled out for Conditioned and Unconditioned Spaces. This page is only for:
☐ CONDITIONED spaces ☒ UNCONDITIONED spaces

A. SUMMARY TOTALS OF LIGHTING POWER ALLOWANCES
- ☐ If using Complete Building Method for compliance, use only the total in column (a) as total allowed building watts.
- ☐ If using Area Category Method, Tailored Method, or a combination of Area Category and Tailored Method for compliance, use only the total in column (b) as the total allowed building watts

	(a)	(b)
1. Complete Building Method Allowed Watts. Documented in section B of NRCC-LTI-03-E (below on this page)		
2. Area Category Method Allowed Watts. Documented in section C-1 of NRCC-LTI-03-E (below on this page)		296
3. Tailored Method Allowed Watts. Documented in section A of NRCC-LTI-04-E		0
TOTAL ALLOWED BUILDING WATTS. Enter number into correct cell on NRCC-LTI-01, Page 2, Row 1		296

☐ Check here if building contains both conditioned and unconditioned areas.

B. COMPLETE BUILDING METHOD LIGHTING POWER ALLOWANCE

A	B		C		D
TYPE OF BUILDING (From §140.6 Table 140.6-B)	WATTS PER (ft^2)	X	COMPLETE BLDG. AREA	=	ALLOWED WATTS
		Total Area:			
Total Watts. Enter Total Watts into section A, row 1 (Above on this page)					

C-1 AREA CATEGORY METHOD TOTAL LIGHTING POWER ALLOWANCES (C-2 plus C-3)

	Watts
Total from section C-2	296
Total from section C-3	0
Total Watts. Enter Total Watts into section A, row 2 (Above on this page)	296

STATE OF CALIFORNIA
INDOOR LIGHTING POWER ALLOWANCE
CEC-NRCC-LTI-03-E (Revised 06/14) — CALIFORNIA ENERGY COMMISSION

CERTIFICATE OF COMPLIANCE	NRCC-LTI-03-E
Certificate of Compliance - Indoor Lighting Power Allowance	(Page 2 of 4)
Project Name: AMS Modular Classroom 24'x40' (for DSA)	Date Prepared: 5/21/2015

A separate page must be filled out for Conditioned and Unconditioned Spaces. This page is only for:
☐ CONDITIONED spaces ☒ UNCONDITIONED spaces

C-2 AREA CATEGORY METHOD GENERAL LIGHTING POWER ALLOWANCE
- ☐ Do not include portable lighting for offices. Portable lighting for offices shall be documented only in section B of NRCC-LTI-01-E.
- ☐ Separately list lighting for each primary function area as defined in §100.1 of the Standards.

A		B		C		D
AREA CATEGORY (From §140.6 Table 140.6-C)		WATTS				ALLOWED
Location in Building	Primary Function Area per Table 140.6-C	PER (ft^2)	X	AREA (ft^2)	=	WATTS
RR	Corridor/Restroom/Support	0.60		353		212
Elec Equipment Room	Electrical, Mechanical Room	0.70		120		84
		TOTALS		473		
Enter sum total Area Category allowed watts into section C-1 of NRCC-LTI-03-E (this compliance form)						296 WATTS

STATE OF CALIFORNIA
INDOOR LIGHTING POWER ALLOWANCE
CEC-NRCC-LTI-03-E (Revised 06/14) — CALIFORNIA ENERGY COMMISSION

CERTIFICATE OF COMPLIANCE	NRCC-LTI-03-E
Certificate of Compliance - Indoor Lighting Power Allowance	(Page 4 of 4)
Project Name: AMS Modular Classroom 24'x40' (for DSA)	Date Prepared: 5/21/2015

DOCUMENTATION AUTHOR'S DECLARATION STATEMENT
1. I certify that this Certificate of Compliance documentation is accurate and complete.

Documentation Author Name: Hans Marsman, CEA, CEPE, LEED AP BD+C	Documentation Author Signature: H Marsman
Company: Brummitt Energy Associates, Inc	Signature Date: 5/21/2015
Address: 777 South Highway 101, Suite 203	CEA/ HERS Certification Identification (if applicable): CABEC — Digitally signed by Hans Marsman Date: 2015.05.21 08:07:53 -07'00'
City/State/Zip: Solana Beach, California 92075	Phone: 619.531.1126

RESPONSIBLE PERSON'S DECLARATION STATEMENT
I certify the following under penalty of perjury, under the laws of the State of California:
1. The information provided on this Certificate of Compliance is true and correct.
2. I am eligible under Division 3 of the Business and Professions Code to accept responsibility for the building design or system design identified on this Certificate of Compliance (responsible designer).
3. The energy features and performance specifications, materials, components, and manufactured devices for the building design or system design identified on this Certificate of Compliance conform to the requirements of Title 24, Part 1 and Part 6 of the California Code of Regulations.
4. The building design features or system design features identified on this Certificate of Compliance are consistent with the information provided on other applicable compliance documents, worksheets, calculations, plans and specifications submitted to the enforcement agency for approval with this building permit application.
5. I will ensure that a completed signed copy of this Certificate of Compliance shall be made available with the building permit(s) issued for the building, and made available to the enforcement agency for all applicable inspections. I understand that a completed signed copy of this Certificate of Compliance is required to be included with the documentation the builder provides to the building owner at occupancy.

Responsible Designer Name: Randall P Cavannagh	Responsible Designer Signature: Randall Cavannagh
Company: American Modular Systems | Gen7 Schools	Date Signed: 05/21/15
Address: 787 Spreckels Avenue	License: C12631
City/State/Zip: Manteca, CA 95336	Phone: 209.825.1921

APPROVED
DIVISION OF STATE ARCHITECT
HIGH PERFORMANCE SECTION
APP.# 02-113876 DATE: 6/2/15
C.E.P.E.

American Modular Systems
787 Spreckels Ave. Manteca, CA 95336
Phone (209) 825-1921 - Fax (209) 825-7018
americanmodular.com

MODULAR MANUFACTURER PROPRIETARY STATEMENT
THESE DRAWINGS AND THE MATERIAL CONTAINED THEREIN ARE THE PROPERTY OF AMERICAN MODULAR SYSTEMS, INC. (AMS) AND SHALL NOT BE REPRODUCED, COPIED OR OTHERWISE DISPOSED OF DIRECTLY OR INDIRECTLY AND SHALL NOT BE USED IN WHOLE OR IN PART TO ASSIST IN THE MAKING OF OR FOR THE PURPOSE OF FURNISHING ANY INFORMATION FOR THE MAKING OF DRAWINGS, PRINTS, APPARATUS OR PARTS THEREOF WITHOUT THE FULL KNOWLEDGE AND WRITTEN CONSENT OF AMS. ALL PATENTABLE MATERIAL CONTAINED HEREIN AND ORIGINATING WITH AMS SHALL BE THE SOLE PROPERTY OF AMS.

PRE-CHECKED SET NAME
24' x 40' THRU 120' x 40' BUILDINGS

SITE SPECIFIC PROJECT NAME

SHEET TITLE
ENERGY CALCULATIONS

MANUFACTURER PROFESSIONAL OF RECORD ON PC
LICENSED ARCHITECT — RANDALL PATRICK CAVANAGH — No. C12631 — Ren. 03-31-17 — STATE OF CALIFORNIA

PROJECT SPECIFIC STATE AGENCY APPROVAL
IDENTIFICATION STAMP DIV. OF THE STATE ARCHITECT
02 116495
AC – FLS SS
DATE 12-18-2017

ORIGINAL PC STATE AGENCY APPROVAL
IDENTIFICATION STAMP DIV. OF THE STATE ARCHITECT CA. DEPT. OF GENERAL SERVICES
PC 02-113876
AC FLS SS
DATE 6/22/15

PRE-CHECK (PC) DOCUMENT – CODE: 2013 CBC
A SEPARATE PROJECT APPLICATION FOR CONSTRUCTION IS REQUIRED

REVISIONS
1
2
3
4

DRAWN BY:
SCALE: AS NOTED
DATE:
SHEET NUMBER
EN.6

02-113876 – 24' x 40' – 120' x 40' EXPOSED STEEL SAVED: 5/21/2015 5:39 PM PLOTTED: 5/22/2015

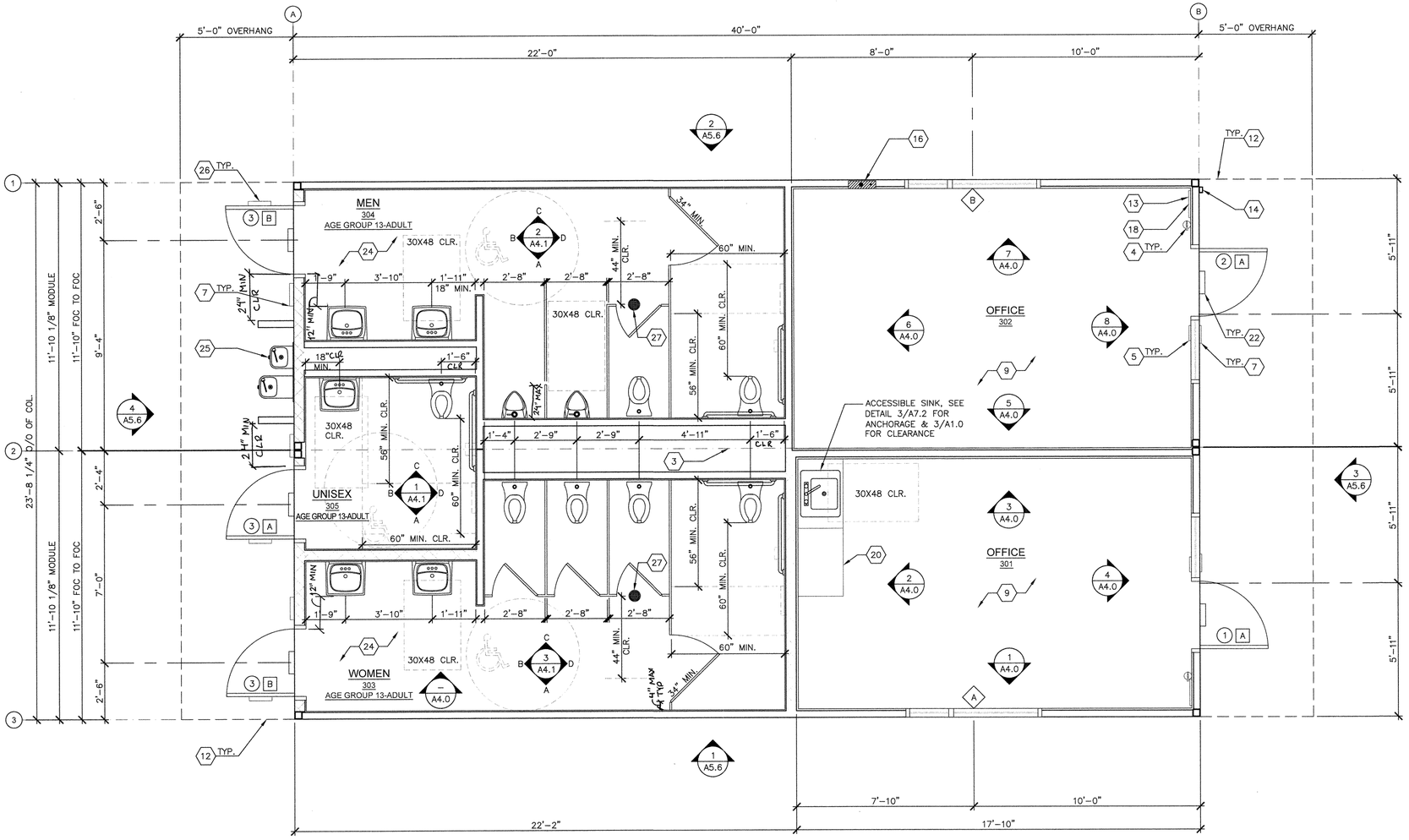

FLOOR PLAN

SCALE: 3/8" = 1'-0" | 1

1. NOT USED
2. NOT USED
3. TYP. MOD LINE
4. FIRE EXTINGUISHER – TOP OF HANDLE @ +48" A.F.F. 4" MAX PROTRUSION FROM WALL IF FIRE EXTINGUISHER IS ABOVE 27" A.F.F.
5. TACTILE EXIT SIGN PER DETAIL 10/N4.0 (BY OTHERS)
6. NOT USED
7. CLASSROOM ID # AND ISA PER DETAILS 5&9/N4.0 (BY OTHERS)
8. NOT USED
9. FLOORING
10. NOT USED
11. NOT USED
12. OVERHANG ABOVE
13. OCCUPANT LOAD SIGN PER DETAIL 11/N4.0 (BY OTHERS)
14. DOWNSPOUT – DISCHARGE TO SPLASH BLOCK (UON) (QUANTITY AND LOCATION MAY VARY)
15. NOT USED
16. ELECTRICAL PANEL (LOCATION MAY VARY)
17. NOT USED
18. FLOOR LIVE LOAD & SNOW LOAD SIGN PER 2013 CBC SECTION 1603.1.1
19. NOT USED
20. LOWER CABINET
21. NOT USED
22. EXTERIOR LIGHT – REFER TO ELECTRICAL SHEETS
23. NOT USED
24. SHEET VINYL
25. HI–LO DRINKING FOUNTAIN – SEE 5/P2.0
26. RESTROOM SIGNAGE (BY OWNER) – SEE DETAIL 10/N4.0
27. FLOOR DRAIN SLOPE NOT TO EXCEED 1:48 IN ANY DIRECTION

KEY NOTES

ENERGY CONTROLS

1. DEMAND RESPONSE CONTROLS:
   ONLY REQUIRED IN BUILDINGS LARGER THAN 10,000 S.F., THEREFORE, NOT REQUIRED FOR THIS PC.
2. AUTOMATIC DAYLIGHTING CONTROLS:
   NOT REQUIRED IN ROOMS WHERE COMBINED INSTALLED LIGHTING POWER IN COMBINED SKYLIT & PRIMARY DAYLIT ZONES ARE <120 WATTS. INSTALLED WATTAGE IN PRIMARY SIDELIT DAY LIT ZONE IS 80 WATTS (2x 40w). THEREFORE, AUTOMATIC DAYLIGHTING CONTROLS ARE ONLY REQUIRED WHEN "SOLATUBES" ARE INSTALLED. SEE A1.1
3. ENERGY MANAGEMENT CONTROL SYSTEM (EMCS) CONNECTION:
   PER TITLE 24 CODE, "AN EMCS MAY BE INSTALLED TO COMPLY WITH THE REQUIREMENTS OF ONE OR MORE LIGHTING CONTROLS IF IT MEETS THE MINIMUM REQUIREMENTS". PC MAY CONTAIN OCCUPANCY SENSORS AND PHOTOCELL CONTROL LIGHTING, IN THAT CASE, AN EMCS IS NOT REQUIRED FOR THIS PC.
4. SOLAR –READY ZONE REQUIREMENTS:
   REQUIREMENTS, DETAIL & TABLE CAN BE FOUND ON SHEET A2.0

ENERGY NOTES

NOTE: ANY MONITORING EQUIPMENT OR ASSOCIATED SENSORS ARE SITE SPECIFIC AND ARE NOT INCLUDED IN THE BASE PC.

ACOUSTIC CONTROLS

1. WHEN THE PRE–CHECK (PC) BUILDING IS SITE ADAPTED, THE BUILDING AND SITE FEATURES SHALL COMPLY WITH THE CALGREEN CODE, SECTION 5.507.4, FOR THE SPECIFIC SITE LOCATION.
2. MINIMUM WALL ASSEMBLIES:
   WALL ASSEMBLIES SHALL BE CONSTRUCTED PER DETAIL SHEETS A5.1, A5.3, A5.5, A5.7, & A8.0, WITH EITHER 2x4 WOOD STUDS OR 6" STEEL STUDS PER LISTED OPTIONS. MINIMUM STC RATINGS LISTED BELOW ARE PER THE CATALOG OF STC & IIC RATINGS FOR WALL AND FLOOR/CEILING ASSEMBLIES, PRODUCED BY THE OFFICE OF NOISE CONTROL – CA DEPARTMENT OF HEALTH SERVICES.

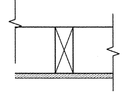

(1) LAYER 1/2" GYPSUM BOARD SECURED TO MIN. 2x4 STUDS @ 16" O.C. MAX.

STC=28 (CATALOG SECTION 1.2.1.5.4.1) TEST REF.: NATIONAL RESEARCH COUNCIL OF CANADA – NRC #66

(1) LAYER 1/2" GYPSUM BOARD SECURED TO MIN. 2 1/2" METAL STUDS @ 24" O.C. MAX

STC=27 (CATALOG SECTION 1.3.2.5.4.1) TEST REF.: NATIONAL RESEARCH COUNCIL OF CANADA – NRC #66

3. IN THE EVENT THAT A PC CLASSROOM IS DESIGNED TO CONNECT TO ANOTHER PC CLASSROOM OR RESTROOM, INTERIOR SOUND TRANSMISSION IN THE INTERIOR ADJOINING WALL AND FLOOR/CEILING SHALL MEET THE MINIMUM REQUIREMENT OF A STC OF 40, PER CALGREEN CODE SECTION 507.4.3.
4. MINIMUM WINDOW & DOOR RATINGS:
   ALL WINDOWS AND DOORS SPECIFIED ON THE SCHEDULES FOUND ON SHEET N3.0 OF THIS PACKAGE SHALL MEET A MINIMUM STC RATING OF 27.

ACOUSTIC NOTES

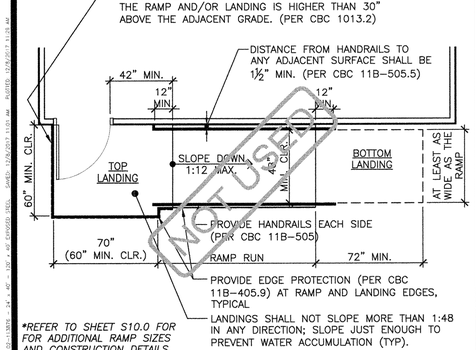

REFER TO SHEET S10.0 FOR ADDITIONAL RAMP SIZES AND CONSTRUCTION DETAILS.

NOT USED

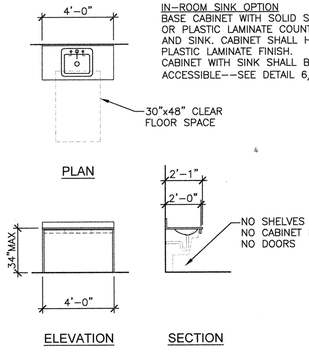

CLASSROOM SINK - OPTION

N.T.S. | 3

1. REFER TO SHEETS N5.0 AND N5.1 FOR ADDITIONAL FLOOR PLAN CONFIGURATIONS.
2. INTERIOR WALLS MAY OCCUR THROUGHOUT BUILDING. REFER TO SHEETS S8.1 OR S9.1 FOR ATTACHMENTS.
3. PANIC HARDWARE COMPLYING WITH C.B.C. 1008.1.10 IS REQUIRED TO BE INSTALLED WHEN THE CONFIGURATION OF ANY ROOM PROVIDES AN OCCUPANT LOAD OF 50 OR GREATER.
4. IF OCCUPANCY LOAD EXCEEDS 50, PROVIDE A SECOND EXIT DOOR, PER CBC TABLE 1015.1.
5. FOR ROOMS OR SPACES CLASSIFIED AS AN ASSEMBLY OCCUPANCY, PROVIDE AN OCCUPANT LOAD SIGN (BY OTHERS) IN A CONSPICUOUS PLACE, NEAR THE MAIN EXIT, PER C.B.C. SECTION 1004.3.

SITE NOTE

3/16:12 (1%) MINIMUM TO 1/4:12 (2%) MAXIMUM GRADE FROM FACE OF BUILDING MUST BE ADHERED TO FOR WATER RUN–OFF. PONDING MAY OCCUR AROUND THE PERIMETER OF THE BUILDING.

SHEET NOTES

- (X) = KEY NOTE – SEE SHEET NOTES
- (X) = DOOR TYPE – SEE SCHEDULE SHEET N3.0
- [X] = DOOR HARDWARE – SEE HARDWARE SCHEDULE SHEET N3.0
- (X) = WINDOW TYPE – SEE SCHEDULE SHEET N3.0

(NO HATCH)
= 2x4 STUD WALL
= 2x6 STUD WALL

SYMBOLS LEGEND

American Modular Systems
787 Spreckels Ave. Manteca, CA 95336
Phone (209) 825-1921 - Fax (209) 825-7018
americanmodular.com

MODULAR MANUFACTURER PROPRIETARY STATEMENT

THESE DRAWINGS AND THE MATERIAL CONTAINED THEREIN ARE THE PROPERTY OF AMERICAN MODULAR SYSTEMS, INC. (AMS) AND SHALL NOT BE REPRODUCED, COPIED OR OTHERWISE DISPOSED OF DIRECTLY OR INDIRECTLY AND SHALL NOT BE USED IN WHOLE OR IN PART TO ASSIST IN THE MAKING OF OR FOR THE PURPOSE OF FURNISHING ANY INFORMATION FOR THE MAKING OF DRAWINGS, PRINTS, APPARATUS OR PARTS THEREOF WITHOUT THE FULL KNOWLEDGE AND WRITTEN CONSENT OF AMS. ALL PATENTABLE MATERIAL CONTAINED HEREIN AND ORIGINATING WITH AMS SHALL BE THE SOLE PROPERTY OF AMS.

PRE–CHECKED SET NAME

24' x 40' THRU 120' x 40' BUILDINGS

SITE SPECIFIC PROJECT NAME

MARIN COMMUNITY CSD - INDIAN VALLEY CAMPUS (1) 24x40 BUILDING

SHEET TITLE

FLOOR PLAN

MANUFACTURER PROFESSIONAL OF RECORD ON PC

LICENSED ARCHITECT TIMOTHY PATRICK MONAHAN No. C12631 Ren. 3-31-19 STATE OF CALIFORNIA

PROJECT SPECIFIC STATE AGENCY APPROVAL

IDENTIFICATION STAMP DIV. OF THE STATE ARCHITECT 02 116496 AC TM DATE 12-18-2017

STATE AGENCY APPROVAL

BASED ON PC# 02-113876

PRE–CHECK (PC) DOCUMENT – CODE: 2013 CBC
A SEPARATE PROJECT APPLICATION FOR CONSTRUCTION IS REQUIRED

REVISIONS
1 05/17/2016 – PC REVISION
2
3
4

DRAWN BY:	BA
SCALE:	AS NOTED
DATE:	11/10/17

SHEET NUMBER

A1.0

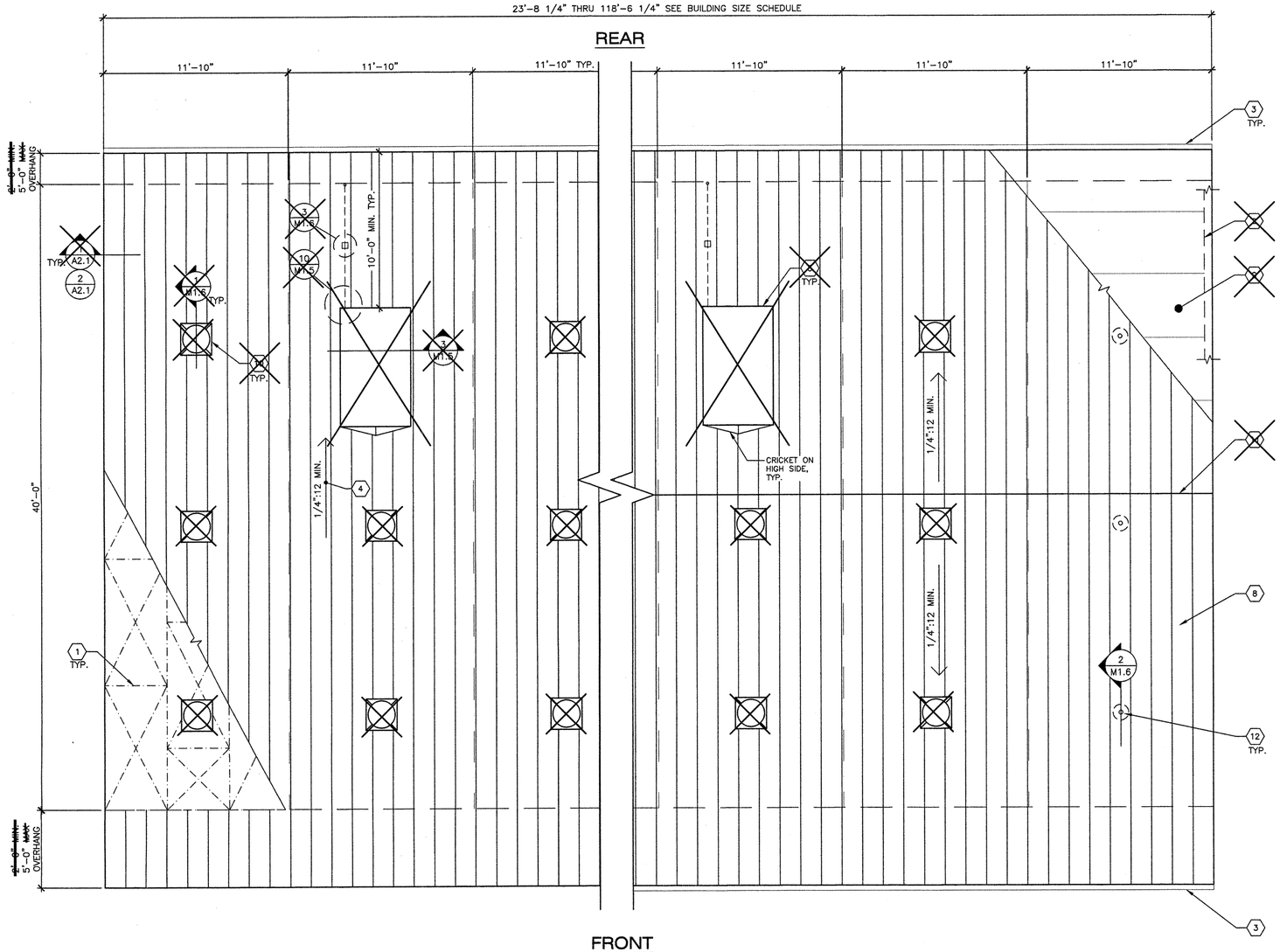

TYPICAL ROOF PLAN — SCALE : 1/4"=1'-0" — 1

ROOF AREA DRAINS
(WITH 5'+2' OVERHANGS)

BUILDING SIZE (NOM.)	ROOF AREA	MINIMUM No. OF DRAINS	SIZE OF DRAIN
☒ 24' x 40'	1128	2	2x3
☐ 36' x 40'	1692	2	2x3
☐ 48' x 40'	2256	3	2x3
☐ 60' x 40'	2820	3	2x3
☐ 72' x 40'	3384	4	2x3
☐ 84' x 40'	3948	5	2x3
☐ 96' x 40'	4512	5	2x3
☐ 108' x 40'	5076	6	2x3
☐ 120' x 40'	5640	6	2x3

NOTES:
1. DOWNSPOUTS & LEADERS PER C.P.C. 1106.1 AND TABLE 1101.11.
2. PC DOWNSPOUT SIZING BASED ON ROOF AREA AND MAX RAINFALL RATE OF 3" PER HOUR. SITE SPECIFIC BUILDING MAY UTILIZE LOCAL RAINFALL RATE--PROVIDE SITE RAINFALL RATE TO DETERMINE MINIMUM NUMBER OF DRAINS REQUIRED.

ROOF DRAIN SCHEDULE

NOT USED — 2

NOT USED — 3

NOT USED — 4

1 OSB SHEATHING
~~2 OPTIONAL PARAPET – SEE SHEET S4.5~~
3 GUTTER – SEE 5/A2.1
4 ROOF SLOPE
~~5 ROOF MOUNT HVAC UNITS – SEE MECHANICAL PLANS, DETAIL 11/M1.4
ATTIC MOUNT HVAC UNITS – SEE DETAIL 3/M1.5~~
6 NOT USED
7 NOT USED
8 STANDING SEAM METAL ROOF – SEE DETAILS ON SHEET A2.1
~~9 TPO ROOF OPTION – SEE DETAILS ON SHEET A2.1~~
~~10 SOLATUBE SKY LIGHTS – OPTIONAL~~
~~11 RIDGE AT DUAL OPTION SLOPE~~
12 PIPE VENT – SEE PLUMBING PLANS

KEY NOTES

SOLAR ZONE REQUIRED, PER TITLE 24 SECTION 110.10: FOR NON-RESIDENTIAL BUILDINGS, 3 STORIES OR LESS, A MINIMUM OF 15% OF ROOF AREA (EXCLUDING SKYLIGHTS) MUST BE SET ASIDE FOR PHOTO-VOLTAICS (PV). THE ROOF MUST HAVE NO ROOF OBSTRUCTIONS.

1. REQUIRED SOLAR-READY ZONE, AREA PER THE CHART BELOW, MUST BE PROVIDED ON BUILDING ROOF.
2. ZONE MUST BE LEFT VOID OF ROOF-MOUNTED HVAC UNITS, SKYLIGHTS OR OTHER OBSTRUCTIONS THAT WOULD HINDER FUTURE INSTALLATION OF SOLAR SYSTEM COMPONENTS, INCLUDING PV PANELS.
3. TOTAL AREA REQUIRED FOR SOLAR-READY ZONE DOES NOT NEED TO BE LOCATED IN ONE AREA BUT CAN BE SPREAD OUT OVER ROOF.
4. SOLAR-READY ZONE SHALL NOT INCLUDE ROOF OVERHANGS, AND SOLAR SYSTEM COMPONENTS MAY NOT BE PLACED THERE.
5. THE ROOF STRUCTURE HAS BEEN DESIGNED PER THE DESIGN LOADS SPECIFIED ON SHEET TS WITH A DESIGN ROOF DEAD LOAD OF 14.8 PSF WHICH MAY NOT INCLUDE ADDITIONAL LOADS FROM SOLAR EQUIPMENT THAT MIGHT BE INSTALLED AT A LATER DATE.
6. EQUIPMENT SUCH AS SOLAR MODULES, INVERTERS, AND METERING EQUIPMENT DO NOT NEED TO BE INSTALLED, NOR DOES CONDUIT, PIPING, OR PRE-INSTALLED MOUNTING HARDWARE.
7. A STRUCTURAL ENGINEER OF RECORD SHOULD BE CONSULTED PRIOR TO ANY FUTURE SOLAR INSTALLATIONS TO DETERMINE THE ADEQUACY OF THE ROOF FRAMING TO SUSTAIN THE LOADS OF THE INSTALLATION ON THE BUILDING STRUCTURE.

REQUIRED SOLAR-READY ZONE

BUILDING	MAX. ROOF AREA (SQ. FT.)	REQ'D ZONE AREA (SQ. FT.)
☒ 24' x 40'	1200	180
☐ 36' x 40'	1800	270
☐ 48' x 40'	2400	360
☐ 60' x 40'	3000	450
☐ 72' x 40'	3600	540
☐ 84' x 40'	4200	630
☐ 96' x 40'	4800	720
☐ 108' x 40'	5400	810
☐ 120' x 40'	6000	900

SOLAR-READY ZONE REQUIREMENTS

American Modular Systems
787 Spreckels Ave. Manteca, CA 95336
Phone (209) 825-1921 - Fax (209) 825-7018
americanmodular.com

MODULAR MANUFACTURER PROPRIETARY STATEMENT
THESE DRAWINGS AND THE MATERIAL CONTAINED THEREIN ARE THE PROPERTY OF AMERICAN MODULAR SYSTEMS, INC. (AMS) AND SHALL NOT BE REPRODUCED, COPIED OR OTHERWISE DISPOSED OF DIRECTLY OR INDIRECTLY AND SHALL NOT BE USED IN WHOLE OR IN PART TO ASSIST IN THE MAKING OF OR FOR THE PURPOSE OF FURNISHING ANY INFORMATION FOR THE MAKING OF DRAWINGS, PRINTS, APPARATUS OR PARTS THEREOF WITHOUT THE FULL KNOWLEDGE AND WRITTEN CONSENT OF AMS. ALL PATENTABLE MATERIAL CONTAINED HEREIN AND ORIGINATING WITH AMS SHALL BE THE SOLE PROPERTY OF AMS.

PRE-CHECKED SET NAME

24' x 40' THRU 120' x 40' BUILDINGS

SITE SPECIFIC PROJECT NAME

SHEET TITLE

ROOF PLAN

MANUFACTURER PROFESSIONAL OF RECORD ON PC

LICENSED ARCHITECT — RANDALL PATRICK GAMACHE — No. C12631 Ren. 03-31-17 — STATE OF CALIFORNIA

IDENTIFICATION STAMP
DIV. OF THE STATE ARCHITECT
02 116495
AC TM SS
DATE 12-15-2017

PROJECT SPECIFIC STATE AGENCY APPROVAL

APPROVED
DIV. OF THE STATE ARCHITECT
SACRAMENTO REGIONAL OFFICE
AC ___ F/LS ___ SS
APP. # 02-113876 DATE 7-5-16

ORIGINAL PC STATE AGENCY APPROVAL

IDENTIFICATION STAMP
DIV. OF THE STATE ARCHITECT
CA. DEPT. OF GENERAL SERVICES
PC 02-113876
AC ___ FLS ___ SS ___
DATE ___

PRE-CHECK (PC) DOCUMENT – CODE: 2013 CBC
A SEPARATE PROJECT APPLICATION FOR CONSTRUCTION IS REQUIRED

REVISIONS
1 05/17/2016 – PC REVISION
2
3
4

DRAWN BY:
SCALE: AS NOTED
DATE:

SHEET NUMBER

A2.0

02-113876 – 24' x 40' – 120' x 40' EXPOSED SITE; XrefDr: 5/16/2016 9:05 AM PLOTTED: 5/16/2016 9:05 AM

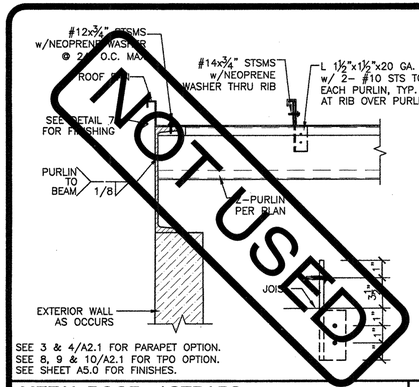

SEE 3 & 4/A2.1 FOR PARAPET OPTION.
SEE 8, 9 & 10/A2.1 FOR TPO OPTION.
SEE SHEET A5.0 FOR FINISHES.

METAL ROOF w/ STRAPS SCALE : 1 1/2"=1'-0" | 1

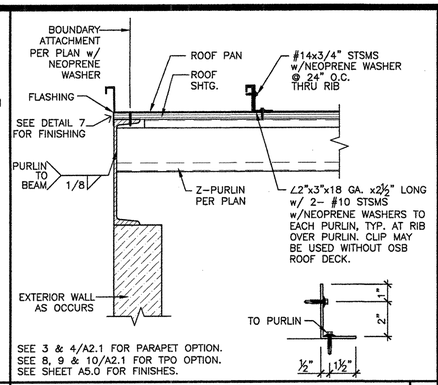

SEE 3 & 4/A2.1 FOR PARAPET OPTION.
SEE 8, 9 & 10/A2.1 FOR TPO OPTION.
SEE SHEET A5.0 FOR FINISHES.

METAL ROOF w/ DECKING SCALE : 1 1/2"=1'-0" | 2

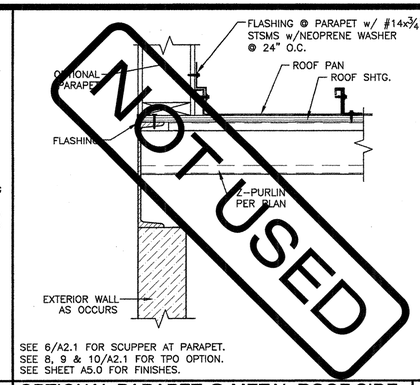

SEE 6/A2.1 FOR SCUPPER AT PARAPET.
SEE 8, 9 & 10/A2.1 FOR TPO OPTION.
SEE SHEET A5.0 FOR FINISHES.

OPTIONAL PARAPET @ METAL ROOF SIDE SCALE : 1 1/2"=1'-0" | 3

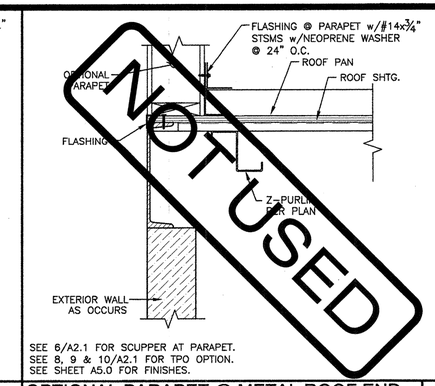

SEE 6/A2.1 FOR SCUPPER AT PARAPET.
SEE 8, 9 & 10/A2.1 FOR TPO OPTION.
SEE SHEET A5.0 FOR FINISHES.

OPTIONAL PARAPET @ METAL ROOF END N.T.S. | 4

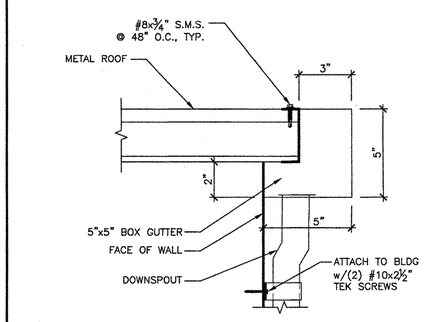

TYP. GUTTER ATTACHMENT SCALE : 1 1/2"=1'-0" | 5

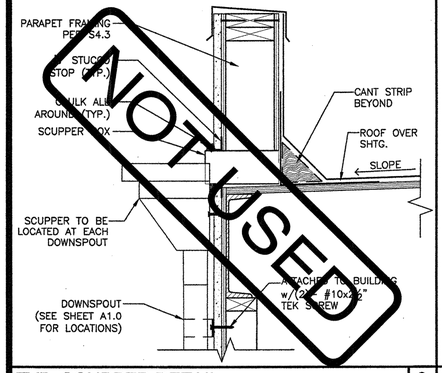

TYP. SCUPPER DETAIL SCALE : 1 1/2"=1'-0" | 6

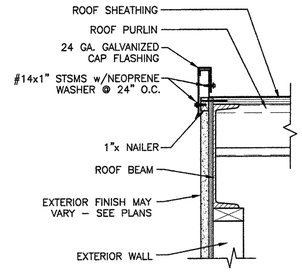

METAL ROOF @ SIDE WALLS SCALE : 1 1/2"=1'-0" | 7

NOT USED | 8

NOT USED N.T.S. | 9

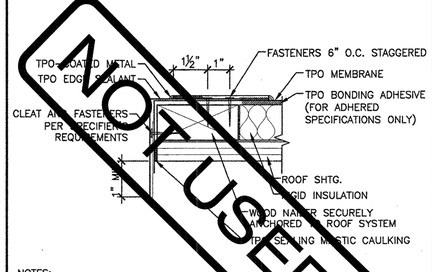

NOTES:
1. DETAILS TO BE USED IN CONJUNCTION WITH GUIDE SPECIFICATION CONTAINING REQUIREMENTS FOR NAILERS, INSULATION, ETC.
2. TPO EDGE SEALANT IS USED TO SEAL THE MEMBRANE EDGES WHERE REINFORCING FABRIC IS CUT AND EXPOSED. EDGE SEALANT IS REQUIRED ON ALL END LAPS, T-JOINTS, AND FIELD CUT EDGES.
3. FOR TPO-COATED METAL JOINT, SEE DETAIL TE
4. INSULATION MUST BE COMPATIBLE WITH TPO BONDING ADHESIVE.

SINGLE-PLY ROOF @ DRIP EDGE N.T.S. | 10

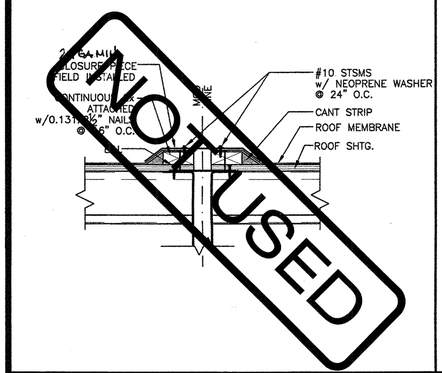

MEMBRANE @ MODLINE OPTION SCALE: 1-1/2"=1'-0" | 11

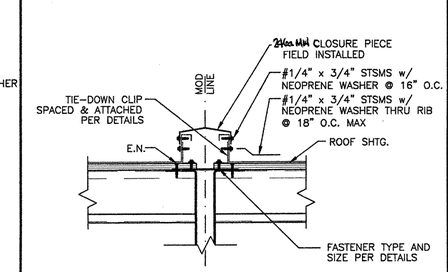

METAL ROOF @ MODLINE OPTION SCALE: 1-1/2"=1'-0" | 12

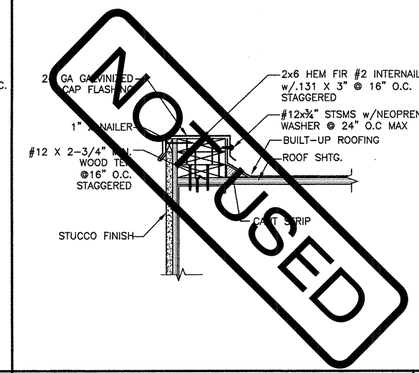

MEMBRANE @ END/SIDES OPTION SCALE: 1-1/2"=1'-0" | 13

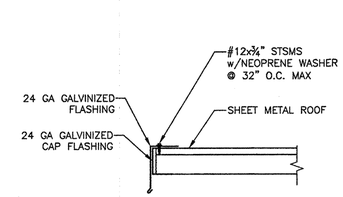

METAL ROOF EDGE @ OVERHANG SCALE: 1-1/2"=1'-0" | 14

NOT USED | 15

NOT USED | 16

NOT USED | 17

NOT USED | 18

NOT USED | 19

NOT USED | 20

American Modular Systems
787 Spreckels Ave, Manteca, CA 95336
Phone (209) 825-1921 - Fax (209) 825-7018
americanmodular.com

MODULAR MANUFACTURER PROPRIETARY STATEMENT

THESE DRAWINGS AND THE MATERIAL CONTAINED THEREIN ARE THE PROPERTY OF AMERICAN MODULAR SYSTEMS, INC. (AMS) AND SHALL NOT BE REPRODUCED, COPIED OR OTHERWISE DISPOSED OF DIRECTLY OR INDIRECTLY AND SHALL NOT BE USED IN WHOLE OR IN PART TO ASSIST IN THE MAKING OF OR FOR THE PURPOSE OF FURNISHING ANY INFORMATION FOR THE MAKING OF DRAWINGS, PRINTS, APPARATUS OR PARTS THEREOF WITHOUT THE FULL KNOWLEDGE AND WRITTEN CONSENT OF AMS. ALL PATENTABLE MATERIAL CONTAINED HEREIN AND ORIGINATING WITH AMS SHALL BE THE SOLE PROPERTY OF AMS.

PRE-CHECKED SET NAME

24' x 40' THRU 120' x 40' BUILDINGS

SITE SPECIFIC PROJECT NAME

SHEET TITLE

ROOF DETAILS

MANUFACTURER PROFESSIONAL OF RECORD ON PC

LICENSED ARCHITECT RANDALL PATRICK CANNADA No. C12631 Ren. 3-31-17 STATE OF CALIFORNIA

PROJECT SPECIFIC STATE AGENCY APPROVAL

IDENTIFICATION STAMP DIV. OF THE STATE ARCHITECT O2 116495 AC TM DATE 12-18-2017

ORIGINAL PC STATE AGENCY APPROVAL

IDENTIFICATION STAMP DIV. OF THE STATE ARCHITECT CA. DEPT. OF GENERAL SERVICES PC 02-113876 AC DATE 6/22/15

PRE-CHECK (PC) DOCUMENT – CODE: 2013 CBC
A SEPARATE PROJECT APPLICATION FOR CONSTRUCTION IS REQUIRED

REVISIONS

1
2
3
4

DRAWN BY:
SCALE: AS NOTED
DATE:

SHEET NUMBER

A2.1

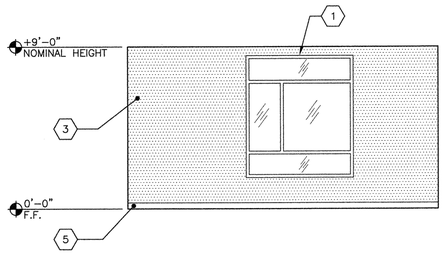

OFFICE 301 - FRONT END WALL ELEVATION SCALE: 1/4" = 1'-0" | 1

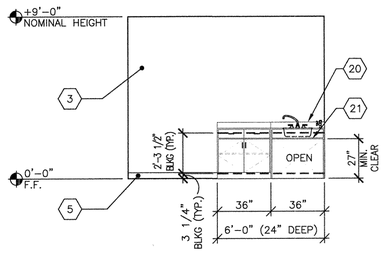

OFFICE 301 - SIDE WALL ELEVATION SCALE: 1/4" = 1'-0" | 2

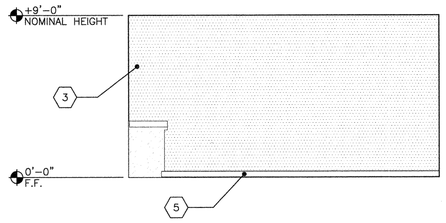

OFFICE 301 - REAR END WALL ELEVATION SCALE: 1/4" = 1'-0" | 3

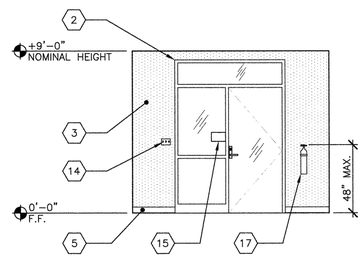

OFFICE 301 - SIDE WALL ELEVATION SCALE: 1/4" = 1'-0" | 4

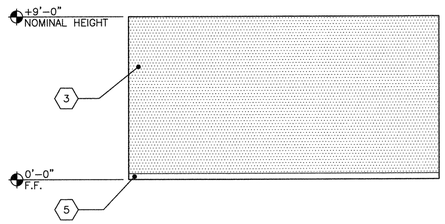

OFFICE 302 - FRONT END WALL ELEVATION SCALE: 1/4" = 1'-0" | 5

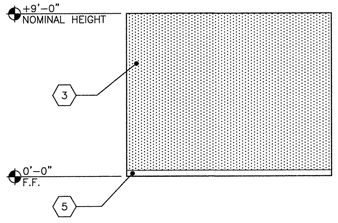

OFFICE 302 - SIDE WALL ELEVATION SCALE: 1/4" = 1'-0" | 6

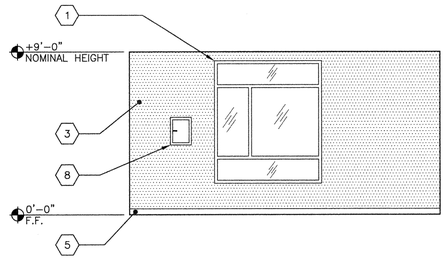

OFFICE 302 - REAR END WALL ELEVATION SCALE: 1/4" = 1'-0" | 7

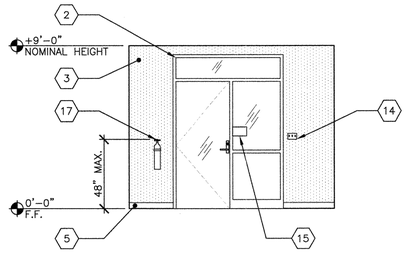

OFFICE 302 - SIDE WALL ELEVATION SCALE: 1/4" = 1'-0" | 8

NOT USED

NOT USED

NOT USED

NOT USED SCALE: N.T.S. | A

1. WINDOW, SEE SPEC'S
2. TYP. EXTERIOR DOOR
3. VINYL WRAPPED TACKABLE WALLS
4. TYP. MOD LINE
5. TOP SET BASE
6. NOT USED
7. NOT USED
8. ELECTRICAL PANEL – SEE ELECTRICAL SHEETS
9. NOT USED
10. NOT USED
11. NOT USED
12. NOT USED
13. NOT USED
14. LIGHT SWITCH – SEE ELECTRICAL SHEETS
15. SIGNAGE – REFER TO N4.0 (BY OTHERS)
16. NOT USED
17. FIRE EXTINGUISHER TOP OF HANDLE @ +48" MAX. A.F.F. PROTRUSION MAX 4" FROM WALL OR BOTTOM OF FIRE EXTINGUISHER LESS THAN +27" A.F.F
18. TYP. DUPLEX OUTLET – SEE ELECTRICAL SHEETS
19. NOT USED
20. SEE DETAIL 6/P2.0
21. LAMINATED COUNTER TOP W/ 4" BACKSPLASH
22. ACCESSIBLE CABINET – SEE 6/P2.0

KEY NOTES

American Modular Systems
787 Spreckels Ave. Manteca, CA 95336
Phone (209) 825-1921 - Fax (209) 825-7018
americanmodular.com

MODULAR MANUFACTURER PROPRIETARY STATEMENT

THESE DRAWINGS AND THE MATERIAL CONTAINED THEREIN ARE THE PROPERTY OF AMERICAN MODULAR SYSTEMS, INC. (AMS) AND SHALL NOT BE REPRODUCED, COPIED OR OTHERWISE DISPOSED OF DIRECTLY OR INDIRECTLY AND SHALL NOT BE USED IN WHOLE OR IN PART TO ASSIST IN THE MAKING OF OR FOR THE PURPOSE OF FURNISHING ANY INFORMATION FOR THE MAKING OF DRAWINGS, PRINTS, APPARATUS OR PARTS THEREOF WITHOUT THE FULL KNOWLEDGE AND WRITTEN CONSENT OF AMS. ALL PATENTABLE MATERIAL CONTAINED HEREIN AND ORIGINATING WITH AMS SHALL BE THE SOLE PROPERTY OF AMS.

PRE-CHECKED SET NAME

24' x 40' THRU 120' x 40' BUILDINGS

SITE SPECIFIC PROJECT NAME

MARIN COMMUNITY CSD - INDIAN VALLEY CAMPUS (1) 24x40 BUILDING

SHEET TITLE

INTERIOR ELEVATIONS CLASSROOMS

MANUFACTURER PROFESSIONAL OF RECORD ON PC

LICENSED ARCHITECT — ANTHONY PATRICK CANAHUATE — No. C12631 Ren. 3-31-19 — STATE OF CALIFORNIA

REGISTERED PROFESSIONAL ENGINEER — MANNY D. FRISCH — No. 53380 Exp: 03/31/18 — STATE OF CALIFORNIA

PROJECT SPECIFIC STATE AGENCY APPROVAL

STATE AGENCY APPROVAL

IDENTIFICATION STAMP
DIV. OF THE STATE ARCHITECT
02 116405
AC TM
DATE 12-18-2017

BASED ON PC# 02-113876

PRE-CHECK (PC) DOCUMENT – CODE: 2013 CBC
A SEPARATE PROJECT APPLICATION FOR CONSTRUCTION IS REQUIRED

REVISIONS

DRAWN BY:	BA
SCALE:	AS NOTED
DATE:	11/10/17

SHEET NUMBER

A4.0

01-113876 • 24' x 40' - 120' x 40' BUILDINGS (ALL) • DATE: 12/6/2017 8:57 AM • PLOTTED: 12/6/2017 11:23 AM

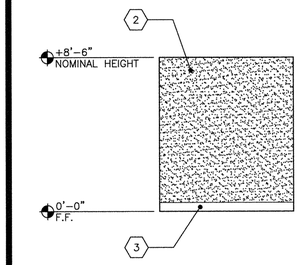

A

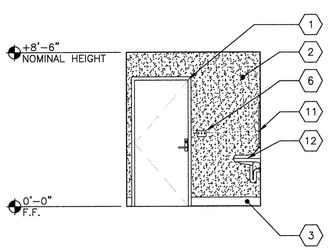

B

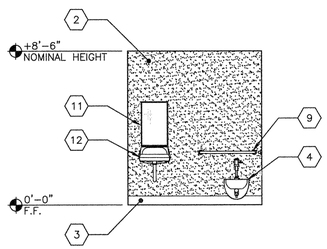

C

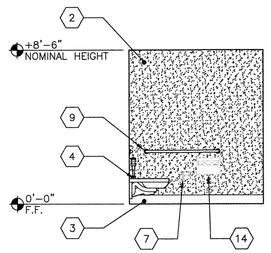

D

UNISEX RESTROOM - INTERIOR ELEVATIONS (AGES 13-ADULT)

SCALE: 1/4" = 1'-0"

1

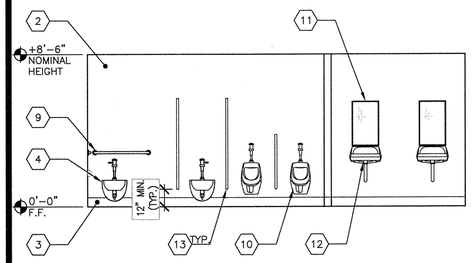

A

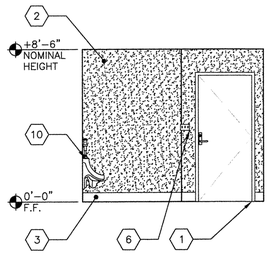

B

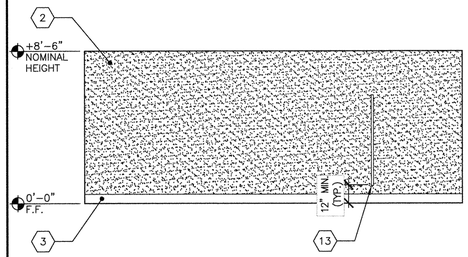

C

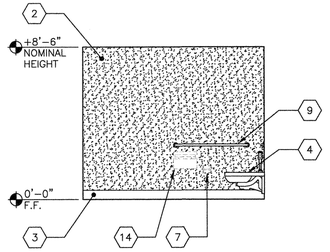

D

MEN RESTROOM - INTERIOR ELEVATIONS (AGES 13-ADULT)

SCALE: 1/4" = 1'-0"

2

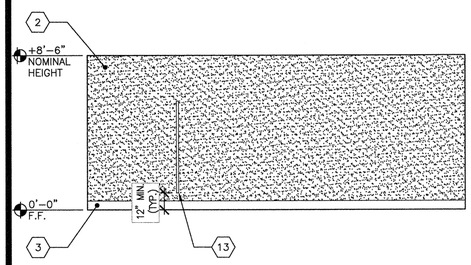

A

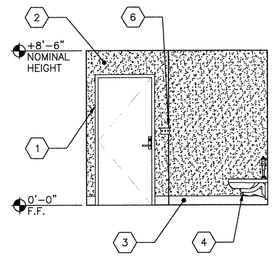

B

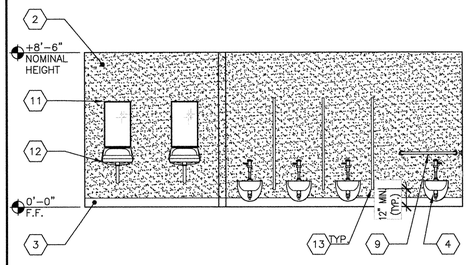

C

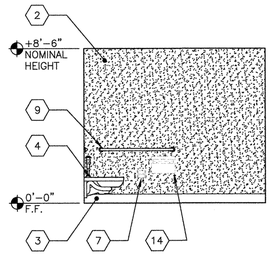

D

WOMEN RESTROOM - INTERIOR ELEVATIONS (AGES 13-ADULT)

SCALE: 1/4" = 1'-0"

3

NOT USED

4

1. TYP. EXTERIOR DOOR
2. F.R.P. (FIBER REINFORCED PLASTIC)
3. 6" TOP SET BASE
4. ACCESSIBLE TOILET – SEE 11/P2.0
5. NOT USED
6. LIGHT SWITCH – SEE ELECTRICAL SHEETS
7. TOILET PAPER DISPENSER – SEE 11/P2.0
8. NOT USED
9. GRAB BAR – SEE DETAIL 1/A7.2 & 11/P2.0
10. ACCESSIBLE URINAL – SEE 13/P2.0
11. TYP. MIRROR – SEE 12/P2.0
12. ACCESSIBLE LAVATORY – SEE 4&12/P2.0
13. TOILET PARTITIONS: SOLID PLASTIC BY ACCURATE PARTITIONS CORP. w/ FLOOR ANCHORS, OVERHEAD BRACED OR EQUIVALENT. MINIMUM FLAME SPREAD RATING: 50. MINIMUM SMOKE DEVELOPMENT RATING: 450.
14. TOILET SEAT COVER DISPENSER (BY OWNER) – SEE 11/P2.0

NOTE: FOR ACCESSIBLE FIXTURES & ACCESSORIES MOUNTING HEIGHT REQUIREMENTS (PER CBC CHAPTER 11B), SEE SHEET P2.0, DETAIL 7.

KEY NOTES

American Modular Systems
787 Spreckels Ave. Manteca, CA 95336
Phone (209) 825-1921 - Fax (209) 825-7018
americanmodular.com

MODULAR MANUFACTURER PROPRIETARY STATEMENT

THESE DRAWINGS AND THE MATERIAL CONTAINED THEREIN ARE THE PROPERTY OF AMERICAN MODULAR SYSTEMS, INC. (AMS) AND SHALL NOT BE REPRODUCED, COPIED OR OTHERWISE DISPOSED OF DIRECTLY OR INDIRECTLY AND SHALL NOT BE USED IN WHOLE OR IN PART TO ASSIST IN THE MAKING OF OR FOR THE PURPOSE OF FURNISHING ANY INFORMATION FOR THE MAKING OF DRAWINGS, PRINTS, APPARATUS OR PARTS THEREOF WITHOUT THE FULL KNOWLEDGE AND WRITTEN CONSENT OF AMS. ALL PATENTABLE MATERIAL CONTAINED HEREIN AND ORIGINATING WITH AMS SHALL BE THE SOLE PROPERTY OF AMS.

PRE-CHECKED SET NAME

24' x 40' THRU 120' x 40' BUILDINGS

SITE SPECIFIC PROJECT NAME

MARIN COMMUNITY CSD - INDIAN VALLEY CAMPUS (1) 24x40 BUILDING

SHEET TITLE

INTERIOR ELEVATIONS RESTROOMS

MANUFACTURER PROFESSIONAL OF RECORD ON PC

LICENSED ARCHITECT ROBERT PATRICK CAVANAUGH No. C12631 Ren. 3-31-19 STATE OF CALIFORNIA

PROJECT SPECIFIC STATE AGENCY APPROVAL

STATE AGENCY APPROVAL

IDENTIFICATION STAMP DIV. OF THE STATE ARCHITECT
02 116425
AC TM KL SS DD
DATE 12-18-2017

BASED ON PC# 02-113876

PRE-CHECK (PC) DOCUMENT – CODE: 2013 CBC
A SEPARATE PROJECT APPLICATION FOR CONSTRUCTION IS REQUIRED

REVISIONS

1	
2	
3	
4	

DRAWN BY:	BA
SCALE:	AS NOTED
DATE:	11/10/17

SHEET NUMBER

A4.1

02-113876 - 24' x 40' 100 + 60 Awnings.rvt Saved: 12/8/2017 10:10:00 AM Printed: 12/8/2017 11:14 AM

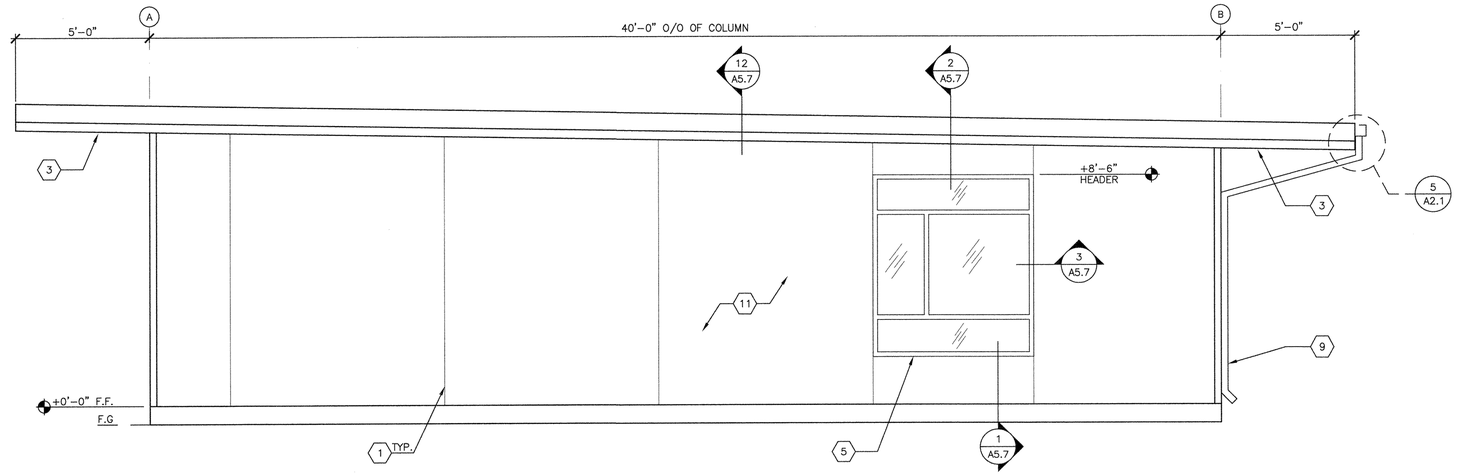

LEFT ELEVATION

SCALE: 3/8" = 1'-0" 1

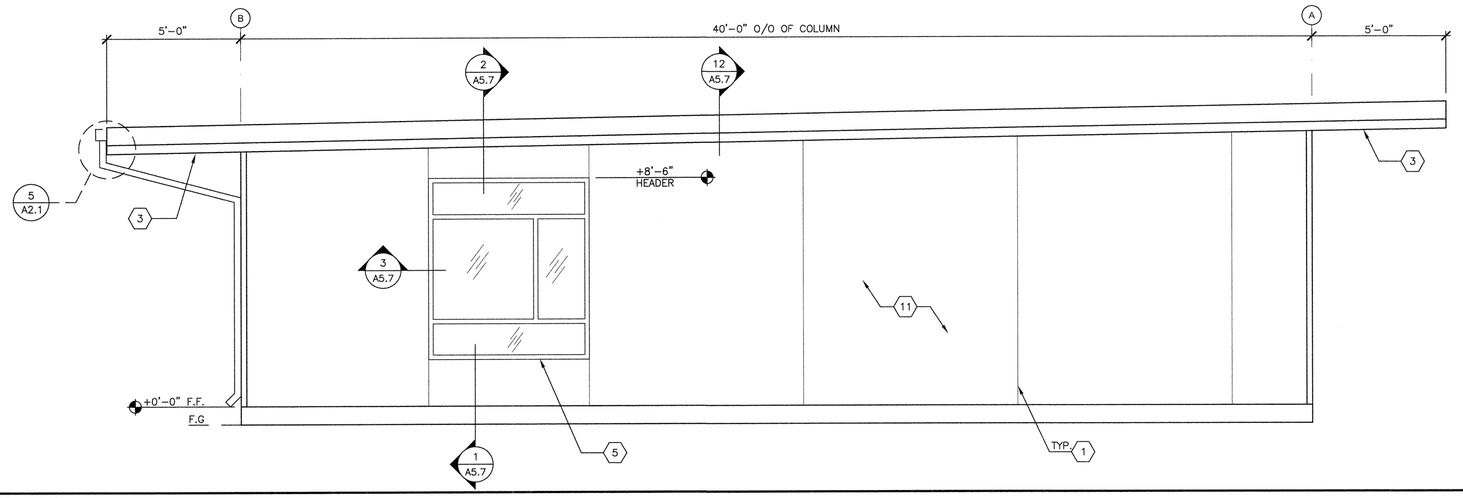

RIGHT ELEVATION

SCALE: 3/8" = 1'-0" 2

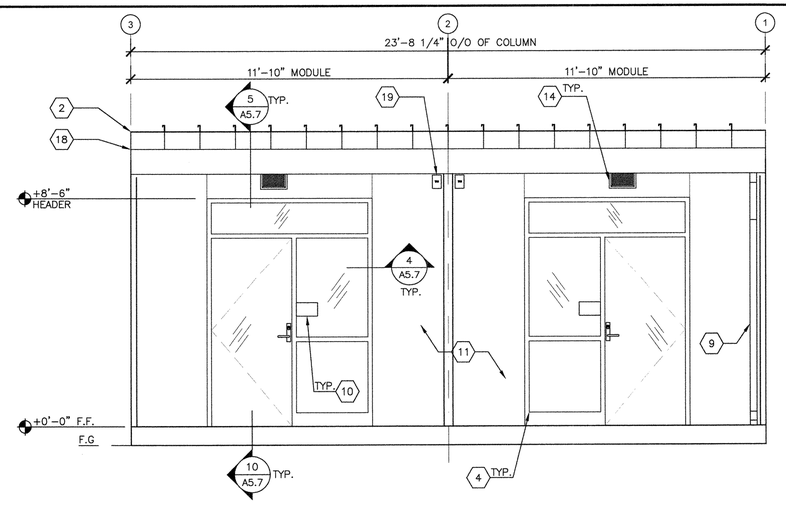

REAR ELEVATION

SCALE: 3/8" = 1'-0" 3

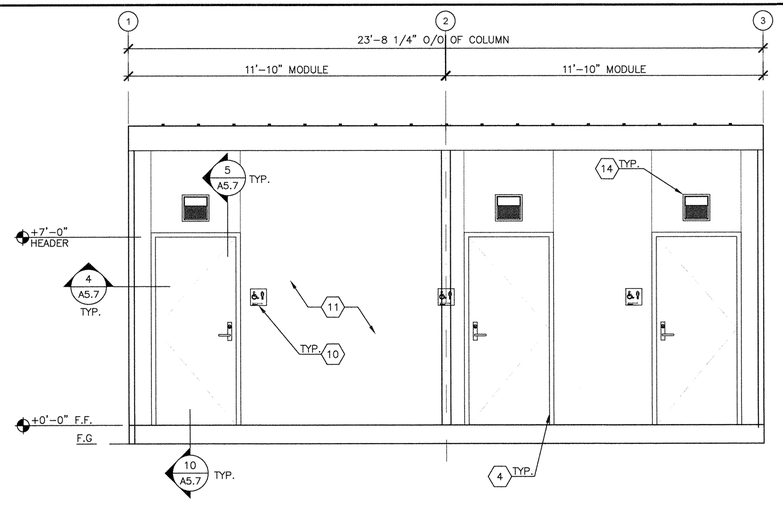

FRONT ELEVATION

SCALE: 3/8" = 1'-0" 4

1. CONTROL JOINT
2. STANDING SEAM METAL ROOFING
3. OVERHANG – SEE STRUCTURAL
4. TYP. EXTERIOR DOOR – SEE SCHEDULE
5. WINDOW – SEE SCHEDULE
6. NOT USED
7. NOT USED
8. NOT USED
9. DOWNSPOUT SEE DETAIL 5/A2.1 FOR ATTACHMENT
10. ROOM ID AND ISA SIGNAGE (BY OTHER) SEE DETAILS 5 & 9/N4.0 – TYP..
11. ACRYLIC TEXTURED FINISH OVER HARDI–BOARD
12. NOT USED
13. NOT USED
14. EXTERIOR LIGHT – SEE ELECTRICAL
15. NOT USED
16. NOT USED
17. NOT USED
18. GUTTER – SEE SHEET 5/A2.1
19. MODULAR IDENTIFICATION TAG +90" ABOVE AFF

WU WILD URBAN INTERFACE:

1. ROOFING IS CLASS "B".
2. EXTERIOR WALL COVERING WILL BE NON-COMBUSTIBLE.
3. OVERHANGS ARE CONSTRUCTED OF NON COMBUSTIBLE MATERIAL.
4. CONCRETE FOUNDATION.
5. EXTERIOR DOOR FRAMES WILL HAVE DUAL TEMPERED GLASS
6. EXTERIOR DOORS HAVE A FIRE RESISTANCE OF NOT LESS THAN 20 MIN.
7. ROOF GUTTERS HAVE A CONDITION SCREEN WITH OPENING NOT EXCEEDING 1/8" TO 1/4".
8. EXTERIOR WINDOWS TO BE DUAL PANE W/ EXTERIOR PANE TEMPERED PER 708A.2
9. ALL EAVES TO BE FULLY ENCLOSED W/ INSULATION, NO VENTING.

KEYNOTES

American Modular Systems
787 Spreckels Ave. Manteca, CA 95336
Phone (209) 825-1921 - Fax (209) 825-7018
americanmodular.com

MODULAR MANUFACTURER PROPRIETARY STATEMENT

THESE DRAWINGS AND THE MATERIAL CONTAINED THEREIN ARE THE PROPERTY OF AMERICAN MODULAR SYSTEMS, INC. (AMS) AND SHALL NOT BE REPRODUCED, COPIED OR OTHERWISE DISPOSED OF DIRECTLY OR INDIRECTLY AND SHALL NOT BE USED IN WHOLE OR IN PART TO ASSIST IN THE MAKING OF OR FOR THE PURPOSE OF FURNISHING ANY INFORMATION FOR THE MAKING OF DRAWINGS, PRINTS, APPARATUS OR PARTS THEREOF WITHOUT THE FULL KNOWLEDGE AND WRITTEN CONSENT OF AMS. ALL PATENTABLE MATERIAL CONTAINED HEREIN AND ORIGINATING WITH AMS SHALL BE THE SOLE PROPERTY OF AMS.

PRE–CHECKED SET NAME

24' x 40' THRU 120' x 40' BUILDINGS

SITE SPECIFIC PROJECT NAME

MARIN COMMUNITY CSD - INDIAN VALLEY CAMPUS (1) 24x40 BUILDING

SHEET TITLE

EXTERIOR ELEVATIONS SYNTHETIC STUCCO OPTION

MANUFACTURER PROFESSIONAL OF RECORD ON PC

LICENSED ARCHITECT — ROY PATRICK CAVANAGH — No. C12631 Ren. 9-31-19 — STATE OF CALIFORNIA

PROJECT SPECIFIC STATE AGENCY APPROVAL

STATE AGENCY APPROVAL

IDENTIFICATION STAMP DIV. OF THE STATE ARCHITECT
02 116495
AC TM FS
DATE 12-18-2017

BASED ON PC# 02-113876

PRE–CHECK (PC) DOCUMENT – CODE: 2013 CBC
A SEPARATE PROJECT APPLICATION FOR CONSTRUCTION IS REQUIRED

REVISIONS

DRAWN BY:	BA
SCALE:	AS NOTED
DATE:	11/10/17

SHEET NUMBER

A5.6

02-113876 - 24' x 40' - ASD - ENGINEER STEEL SHEET - PLOTTED: 12/5/2017 4:54 PM

TYP. WINDOW SILL DETAIL — SCALE: 3"=1'-0" — 1

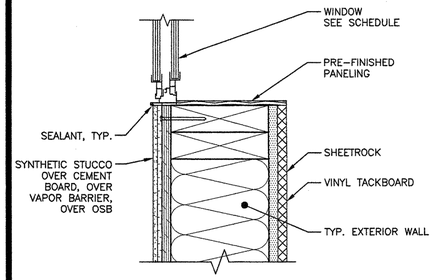

TYP. WINDOW HEADER DETAIL — SCALE: 3"=1'-0" — 2

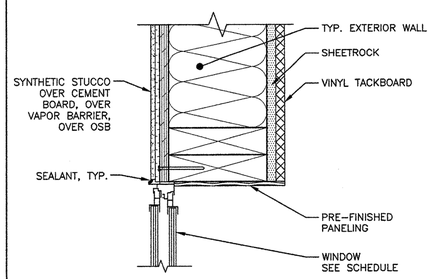

TYP. WINDOW JAMB DETAIL — SCALE: 3"=1'-0" — 3

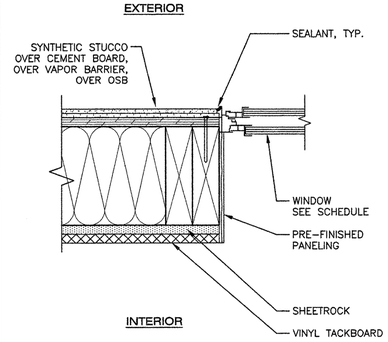

TYP. DOOR JAMB DETAIL — SCALE: 3"=1'-0" — 4

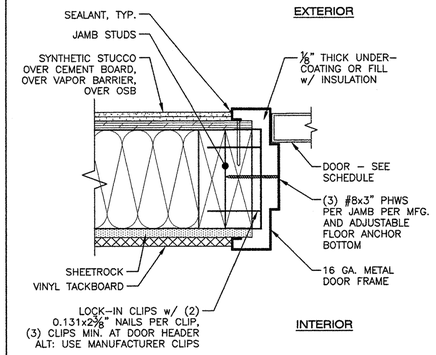

TYP. DOOR HEADER DETAIL — SCALE: 3"=1'-0" — 5

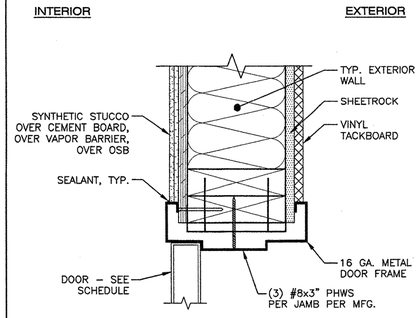

TYP. INTERIOR DOOR HEADER DETAIL — SCALE: 3"=1'-0" — 6

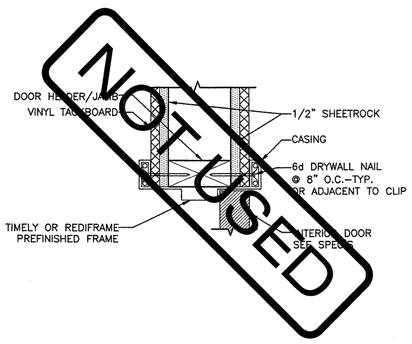

NOT USED — 7

DOWNSPOUT ATTACHMENT DETAIL — SCALE: 3"=1'-0" — 8

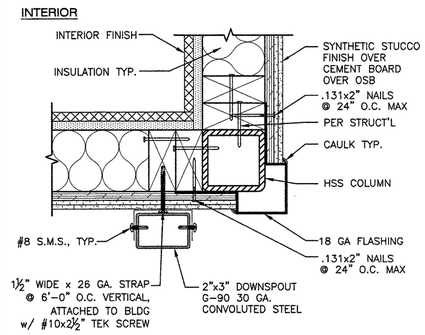

TYP. MODLINE CLOSURE DETAIL — SCALE: 3"=1'-0" — 9

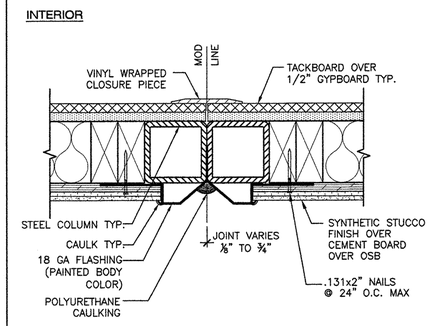

THRESHOLD DETAIL — SCALE: 3"=1'-0" — 10

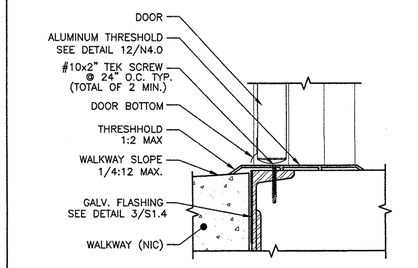

NOT USED — 11

EXTERIOR FINISH @ ROOF BEAM — SCALE: 3"=1'-0" — 12

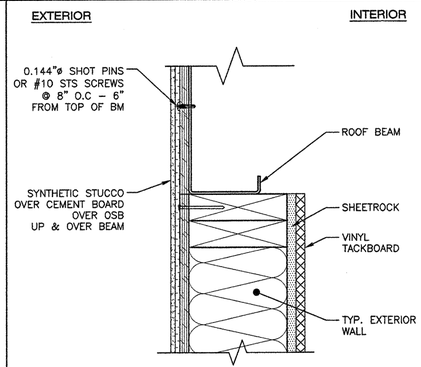

NOT USED — 13

DOOR JAMB OPTION — SCALE: 3"=1'-0" — 14

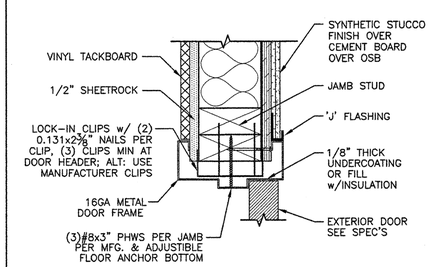

DOOR HEADER OPTION — SCALE: 3"=1'-0" — 15

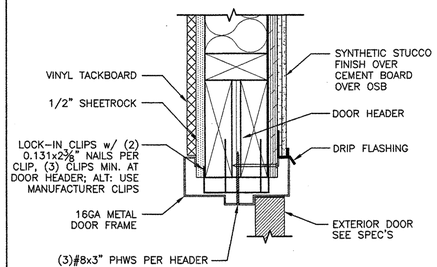

NOT USED — 16

NOT USED — 17

NOT USED — 18

OPTIONAL HYBRID STUCCO DETAIL — 19

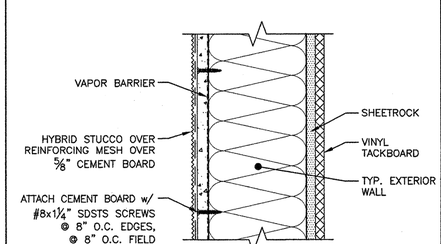

NOTES

NOTES:

1. FOR OPTIONAL METAL STUD FRAMING SEE S9.0–S9.2
2. ADDITIONAL R–5 RIGID INSULATION REQUIRED @ METAL STUD WALLS SEE SHEET M1.7
3. OPTIONAL HYBRID STUCCO FINISH DOES NOT REQUIRE OSB; SEE DETAIL 19/–.

American Modular Systems
787 Spreckels Ave. Manteca, CA 95336
Phone (209) 825–1921 - Fax (209) 825–7018
americanmodular.com

MODULAR MANUFACTURER PROPRIETARY STATEMENT

THESE DRAWINGS AND THE MATERIAL CONTAINED THEREIN ARE THE PROPERTY OF AMERICAN MODULAR SYSTEMS, INC. (AMS) AND SHALL NOT BE REPRODUCED, COPIED OR OTHERWISE DISPOSED OF DIRECTLY OR INDIRECTLY AND SHALL NOT BE USED IN WHOLE OR IN PART TO ASSIST IN THE MAKING OF OR FOR THE PURPOSE OF FURNISHING ANY INFORMATION FOR THE MAKING OF DRAWINGS, PRINTS, APPARATUS OR PARTS THEREOF WITHOUT THE FULL KNOWLEDGE AND WRITTEN CONSENT OF AMS. ALL PATENTABLE MATERIAL CONTAINED HEREIN AND ORIGINATING WITH AMS SHALL BE THE SOLE PROPERTY OF AMS.

PRE–CHECKED SET NAME

24' x 40' THRU 120' x 40' BUILDINGS

SITE SPECIFIC PROJECT NAME

SHEET TITLE

TYP. ARCHITECTURAL DETAILS SYNTHETIC STUCCO OPTION

MANUFACTURER PROFESSIONAL OF RECORD ON PC

LICENSED ARCHITECT — RANDOLPH PATRICK CUNNINGHAM — No. C12631 Ren. 08-31-17 — STATE OF CALIFORNIA

IDENTIFICATION STAMP DIV. OF THE STATE ARCHITECT
02 116405
AC TM FLS SS
DATE 12-18-2017

PROJECT SPECIFIC STATE AGENCY APPROVAL

APPROVED
DIV. OF THE STATE ARCHITECT
SACRAMENTO REGIONAL OFFICE
AC FLS SS
APP. # 117876 DATE 7-5-16

ORIGINAL PC STATE AGENCY APPROVAL

IDENTIFICATION STAMP
DIV. OF THE STATE ARCHITECT
CA. DEPT. OF GENERAL SERVICES
PC 02–113876
AC FLS SS
DATE

PRE–CHECK (PC) DOCUMENT – CODE: 2013 CBC
A SEPARATE PROJECT APPLICATION FOR CONSTRUCTION IS REQUIRED

REVISIONS

1 05/17/2016 – PC REVISION
2
3
4

DRAWN BY:
SCALE: AS NOTED
DATE:

SHEET NUMBER

A5.7

02-113876 – 24' x 40' – 120' x 40' EMPIRED STEEL SHEET\ 1/6/2016 11:05 AM PLOTTED: 1/6/2016 11:32 AM

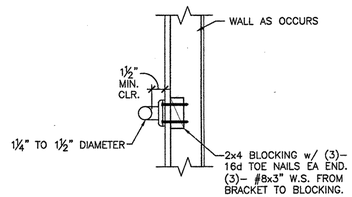

GRAB BAR BLOCKING DETAIL — SCALE : 1 1/2"=1'-0" — 1

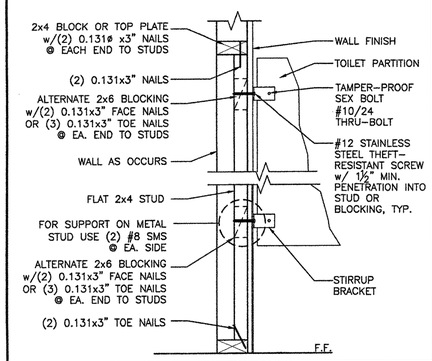

TOILET PARTITION WALL BLOCKING — SCALE: N.T.S. — 2

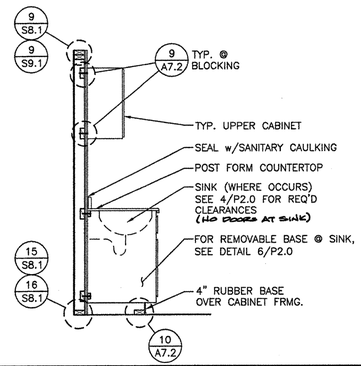

CABINET BLOCKING DETAIL — SCALE: N.T.S. — 3

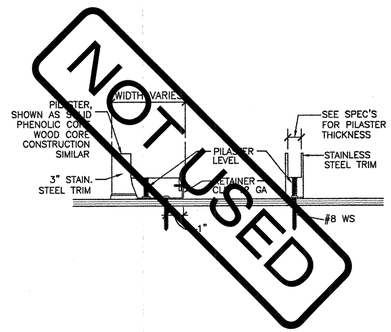

TOILET PARTITION FLOOR BLOCKING WOOD FLOOR — SCALE: N.T.S. — 4

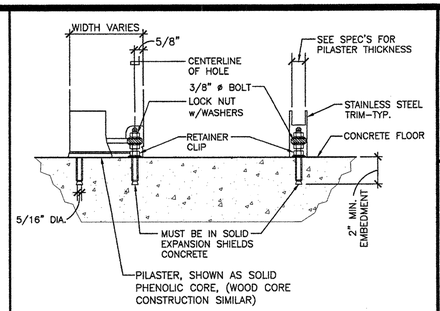

DRILL HOLES FOR FLOOR ATTACHMENT 5/8" FROM EDGE OF PILASTER. TYPICAL FOR ALL LOCATIONS.
NOTE: PLACE STAINLESS STEEL TRIM ON PILASTER, SLIDE UP BEFORE SECURING PILASTER TO FLOOR ATTACHMENT.

TOILET PARTITION FLOOR BLOCKING CONCRETE FLOOR — SCALE: N.T.S. — 5

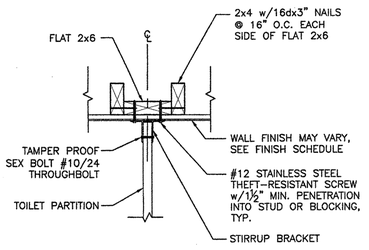

WOOD STUDS OPTION No. 1

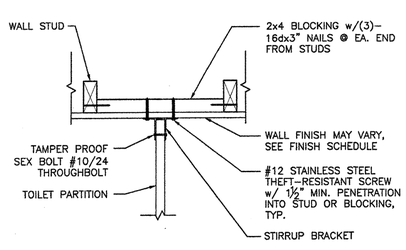

WOOD STUDS OPTION No. 2

TOILET PARTITION ANCHORAGE BLOCKING DETAILS @ WALL — SCALE : 1 1/2"=1'-0" — 6

NOTCH & BORING SCHEDULE					
	STUD WIDTH		NOTCHING	BORING	
SIZE	NOMINAL	ACTUAL	25%	25%	30%
2x4	4"	3½"	7/8"	7/8"	1 1/16"
2x6	6"	5½"	1 3/8"	1 3/8"	1 5/8"
2x8	8"	7¼"	1 13/16"	1 13/16"	2 3/16"

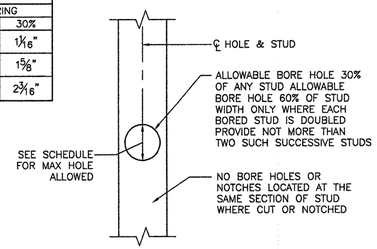

EXTERIOR WALL BORING

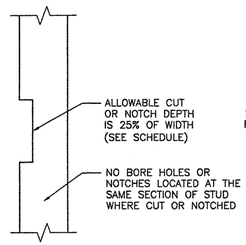

INTERIOR WALL NOTCHING

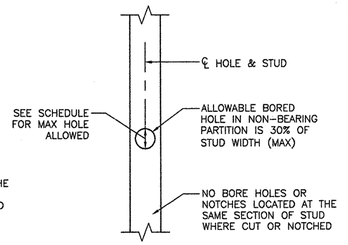

INTERIOR WALL BORING

STUD NOTCHING AND BORING DETAILS — SCALE: N.T.S. — 7

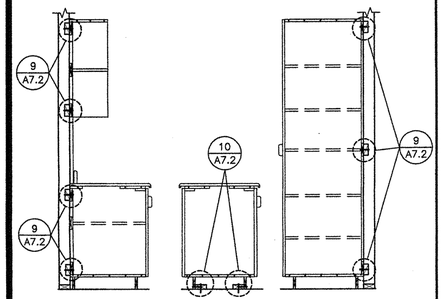

UPPER/BASE CABINET ISLAND CABINET TALL CABINET

TYP. CABINET BLOCKING DETAIL — SCALE: N.T.S. — 8

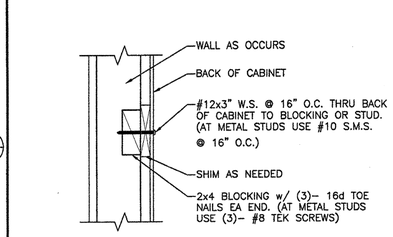

NOTE: BLOCKING IS ONLY REQUIRED IF CABINET DOES NOT CROSS A MIN. OF (2) STUDS.

NOTE: FOR METAL STUD OPTION SEE 20/S9.1 FOR BLOCKING

CABINET BLOCKING — SCALE: N.T.S. — 9

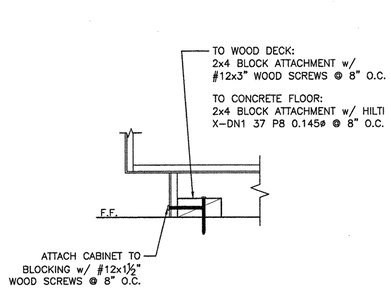

CABINET BLOCKING — SCALE: N.T.S. — 10

NOT USED — 11

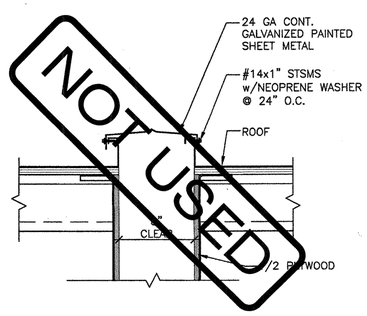

CLOSURE PIECE DETAIL @ ROOF — SCALE: N.T.S. — 12

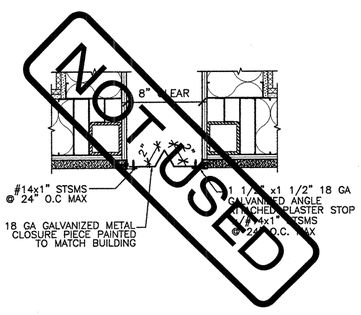

CLOSURE PIECE DETAIL @ WALL — SCALE: N.T.S. — 13

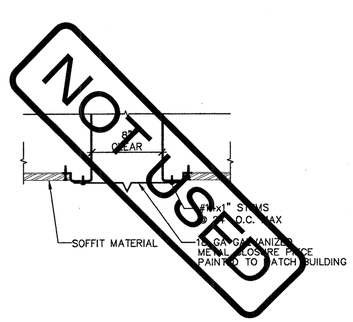

CLOSURE PIECE DETAIL @ SOFFIT — SCALE: N.T.S. — 15

NOT USED — 16

NOT USED — 17

AMS®
American Modular Systems
787 Spreckels Ave. Manteca, CA 95336
Phone (209) 825-1921 - Fax (209) 825-7018
americanmodular.com

MODULAR MANUFACTURER PROPRIETARY STATEMENT

THESE DRAWINGS AND THE MATERIAL CONTAINED THEREIN ARE THE PROPERTY OF AMERICAN MODULAR SYSTEMS, INC. (AMS) AND SHALL NOT BE REPRODUCED, COPIED OR OTHERWISE DISPOSED OF DIRECTLY OR INDIRECTLY AND SHALL NOT BE USED IN WHOLE OR IN PART TO ASSIST IN THE MAKING OF OR FOR THE PURPOSE OF FURNISHING ANY INFORMATION FOR THE MAKING OF DRAWINGS, PRINTS, APPARATUS OR PARTS THEREOF WITHOUT THE FULL KNOWLEDGE AND WRITTEN CONSENT OF AMS. ALL PATENTABLE MATERIAL CONTAINED HEREIN AND ORIGINATING WITH AMS SHALL BE THE SOLE PROPERTY OF AMS.

PRE–CHECKED SET NAME

24' x 40' THRU 120' x 40' BUILDINGS

SITE SPECIFIC PROJECT NAME

SHEET TITLE

MISCELLANEOUS ARCHITECTURAL DETAILS

MANUFACTURER PROFESSIONAL OF RECORD ON PC

LICENSED ARCHITECT — DANIEL PATRICK CONNOLLY — No. C12631 Ren. 3-31-17 — STATE OF CALIFORNIA

PROJECT SPECIFIC STATE AGENCY APPROVAL

IDENTIFICATION STAMP DIV. OF THE STATE ARCHITECT
02 116495
ACCEPTED
DATE 12-12-2017

ORIGINAL PC STATE AGENCY APPROVAL

IDENTIFICATION STAMP DIV. OF THE STATE ARCHITECT CA. DEPT. OF GENERAL SERVICES
PC 02–113876
ACCEPTED
DATE 6/22/15

PRE–CHECK (PC) DOCUMENT – CODE: 2013 CBC
A SEPARATE PROJECT APPLICATION FOR CONSTRUCTION IS REQUIRED

REVISIONS

1
2
3
4

DRAWN BY:
SCALE: AS NOTED
DATE:

SHEET NUMBER

A7.2

NOT USED

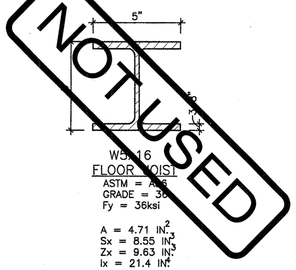

W5x16
FLOOR JOIST
ASTM = A36
GRADE = 36
Fy = 36ksi

A = 4.71 IN^2
Sx = 8.55 IN^3
Zx = 9.63 IN^3
Ix = 21.4 IN^4
t = .25 IN.

HOT ROLLED FLOOR JOIST PROPERTIES

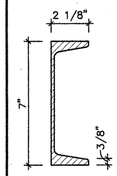

C 7x9.8
FLOOR BEAM

ASTM = A36
GRADE = 36
FY = 36 ksi

A = 2.87 IN^2
Sx = 6.07 IN^3
Zx = 7.19 IN^3
Ix = 21.20 IN^4
t = .1875 IN.

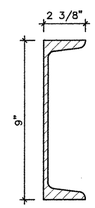

C9x13.4
FLOOR BEAM

ASTM = A36 GRADE 36
OR
ASTM = A572 GRADE 50

A = 3.94 IN^2
Sx = 10.60 IN^3
Zx = 12.60 IN^3
Ix = 47.80 IN^4
t = .25 IN.

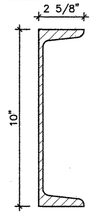

C 10x15.3
FLOOR BEAM

ASTM = A36
GRADE = 36
FY = 36 ksi

A = 4.48 IN^2
Sx = 13.50 IN^3
Zx = 15.90 IN^3
Ix = 67.30 IN^4
t = .25 IN.

HOT ROLLED FLOOR BEAM PROPERTIES

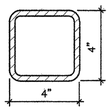

HSS 4x4x5/16
COLUMN

ASTM = A500
GRADE = 46
FY = 46ksi

A = 4.10 IN^2
Sx = 4.57 IN^3
Zx = 5.59 IN^3
Ix = 9.14 IN^4
t = .3125 IN.

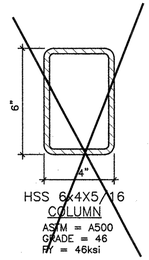

HSS 6x4x5/16
COLUMN

ASTM = A500
GRADE = 46
FY = 46ksi

A = 5.26 IN^2
Sx = 8.27 IN^3
Zx = 10.30 IN^3
Ix = 24.80 IN^4
t = .3125 IN.

Sy = 6.58 IN^3
Zy = 7.75 IN^3
Iy = 13.2 IN^4

HSS COLUMN PROPERTIES

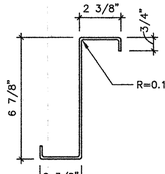

6-7/8" x 2-3/8" X 14 GA.
FLOOR JOIST (1)

ASTM A1011 GRADE 45(2)
Fy = 45KSI

A = 0.89 IN^2
Sx = 1.85 IN^3
Ix = 6.37 IN^4
t = 0.068 IN. MIN.

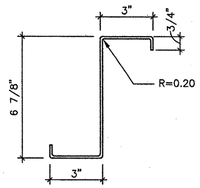

6-7/8"x3" X 12 GA.
FLOOR JOIST(1)

ASTM A1011 GRADE 45(2)
Fy = 45KSI(2)

A = 1.38 IN^2
Sx = 2.97 IN^3
Ix = 10.20 IN^4
t = 0.097 IN. MIN.

NOTES:
1. MEMBERS TO BE FABRICATED FROM HOT ROLLED SHEETS WITH OPTIONAL RUST INHIBITIVE COATING.
2. STEEL GRADE 50 (F_y=50KSI) AT STRUCTO-CRETE FLOOR OPTION

LIGHT GAUGE FLOOR JOIST PROPERTIES

(26 GA. MAY BE USED w/PLYWOOD SHEATHING)

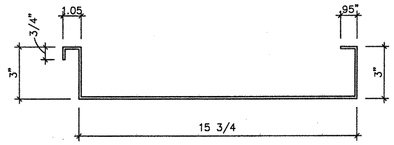

ASTM = A101
GRADE = 36
FY = 36ksi

W/ GALVANIZATION
t=0.0356 IN. MIN.

W/O GALVANIZATION
t=0.0329 IN. MIN.

$S\bar{x}(t) = 0.364\ IN^3$
$S\bar{x}(b) = 1.372\ IN^3$
$I\bar{x} = 0.863\ IN^4$

$S\bar{x}(t) = 0.330\ IN^3$
$S\bar{x}(b) = 0.305\ IN^3$
$I\bar{x} = 0.476\ IN.$
$A = 0.84\ IN.^2$

NOTE:
MEMBERS TO BE FABRICATED FROM HOT ROLLED SHEETS WITH OPTIONAL RUST INHIBITIVE COATING.

20 GALVANIZED ROOF PAN PROPERTIES

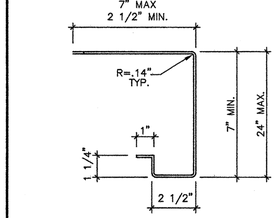

14 GA. FORMED SOFFIT CEE
(ALL CALCULATIONS BASED ON SECTION PROPERTIES OF 7" CEE)

ASTM = A1011
GRADE = 36
Fy = 36ksi
A = 0.97 IN^2
Sx = 1.78 IN^3
Ix = 6.87 IN^4
t = 0.068 IN. MIN.

NOTE:
MEMBERS TO BE FABRICATED FROM HOT ROLLED SHEETS WITH OPTIONAL RUST INHIBITIVE COATING.

14GA FORMED SOFFIT CEE POPERTIES

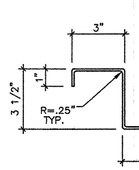

10 GA. ROOF PURLIN

ASTM = A1011
GRADE = 36
Fy = 36ksi
A = 1.30 IN^2
Sx = 1.49 IN^3
Ix = 2.60 IN^4
t = 0.129 IN. MIN.

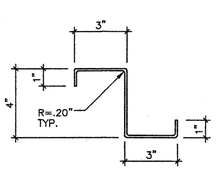

12 GA. ROOF PURLIN

ASTM = A1011
GRADE = 36
Fy = 36ksi
A = 1.14 IN^2
Sx = 1.50 IN^3
Ix = 3.00 IN^4
t = 0.097 IN. MIN.

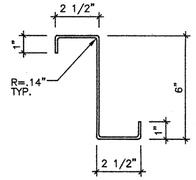

14 GA. ROOF PURLIN

ASTM = A1011
GRADE = 36
Fy = 36ksi
A = 0.089 IN^2
Sx = 1.65 IN^3
Ix = 4.95 IN^4
t = 0.068 IN. MIN.

NOTE:
MEMBERS TO BE FABRICATED FROM HOT ROLLED SHEETS WITH OPTIONAL RUST INHIBITIVE COATING.

LIGHT GAUGE ROOF PURLIN PROPERTIES

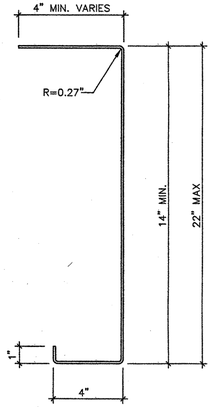

10 GA. LONGITUDINAL BEAM

ASTM = A1011
GRADE = 50
Fy = 50ksi
t = 0.129 IN. MIN.

	14"	18"	22
A (IN^2)	2.99	3.53	4.07
Sx MIN. (IN^3)	11.50	16.50	22.22
Ix MIN. (IN^4)	82.87	152.26	249.90

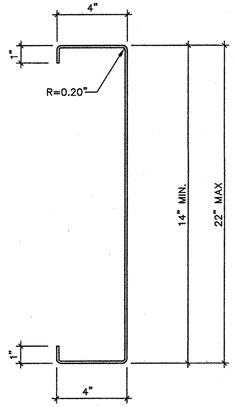

12 GA. TRANSVERSE BEAM/HEADER

ASTM = A1011
GRADE = 36
Fy = 36ksi
t = 0.097 IN. MIN.

	14"	22"
A (IN^2)	2.36	3.17
Sx MIN. (IN^3)	9.57	18.18
Ix MIN. (IN^4)	67.02	199.97

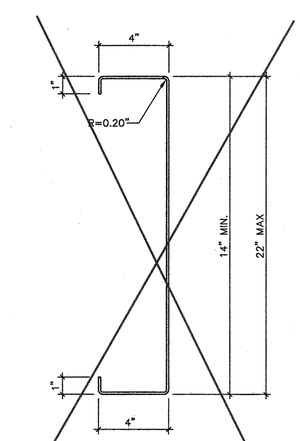

10 GA. TRANSVERSE BEAM/HEADER

ASTM = A1011
GRADE = 50
Fy = 50ksi
t = 0.129 IN. MIN.

	14"	22"
A (IN^2)	3.09	4.17
Sx MIN. (IN^3)	12.41	23.68
Ix MIN. (IN^4)	86.88	260.50

NOTE:
MEMBERS TO BE FABRICATED FROM HOT ROLLED SHEETS WITH OPTIONAL RUST INHIBITIVE COATING.

LIGHT GAUGE ROOF BEAM PROPERTIES

1. THE MATERIAL THICKNESS OF LIGHT GAUGE STRUCTURAL MEMBERS, IN THEIR END-USE, SHALL MEET OR EXCEED THE MINIMUM BASE METAL THICKNESS SPECIFIED ON SHEET S0.0 THE MATERIAL GAGE DESIGNATION IN THE PLAN SHALL BE USED AS REFERENCE ONLY.

SHEET NOTES

AMS
American Modular Systems
787 Spreckels Ave. Manteca, CA 95336
Phone (209) 825-1921 - Fax (209) 825-7018
americanmodular.com

MODULAR MANUFACTURER PROPRIETARY STATEMENT

THESE DRAWINGS AND THE MATERIAL CONTAINED THEREIN ARE THE PROPERTY OF AMERICAN MODULAR SYSTEMS, INC. (AMS) AND SHALL NOT BE REPRODUCED, COPIED OR OTHERWISE DISPOSED OF DIRECTLY OR INDIRECTLY AND SHALL NOT BE USED IN WHOLE OR IN PART TO ASSIST IN THE MAKING OF OR FOR THE PURPOSE OF FURNISHING ANY INFORMATION FOR THE MAKING OF DRAWINGS, PRINTS, APPARATUS OR PARTS THEREOF WITHOUT THE FULL KNOWLEDGE AND WRITTEN CONSENT OF AMS. ALL PATENTABLE MATERIAL CONTAINED HEREIN AND ORIGINATING WITH AMS SHALL BE THE SOLE PROPERTY OF AMS.

PRE-CHECKED SET NAME

24' x 40' THRU 120' x 40'
BUILDINGS

SITE SPECIFIC PROJECT NAME

SHEET TITLE

STEEL
MEMBER
PROPERTIES

MANUFACTURER PROFESSIONAL OF RECORD ON PC

05/19/2015

PROJECT SPECIFIC STATE AGENCY APPROVAL

IDENTIFICATION STAMP
DIV. OF THE STATE ARCHITECT
02 116495
AC ___ FLS ___
DATE 12-18-2017

ORIGINAL PC STATE AGENCY APPROVAL

IDENTIFICATION STAMP
DIV. OF THE STATE ARCHITECT
CA. DEPT. OF GENERAL SERVICES
PC 02-113876
AC ___ FLS ___
DATE 6/22/15

PRE-CHECK (PC) DOCUMENT - CODE: 2013 CBC
A SEPARATE PROJECT APPLICATION FOR CONSTRUCTION IS REQUIRED

REVISIONS

1.
2.
3.
4.

DRAWN BY:
SCALE: AS NOTED
DATE:

SHEET NUMBER

S0.0

R2-113576 - 24' x 40' - 120' x 40' EXPOSED STEEL SHEETS 6/17/2015 1:56 PM RVETOS

FOUNDATION INSTALL BY OTHERS STATEMENT

FOUNDATION DESIGN AND ENGINEERING BY AMS, INSTALLATION BY OTHERS. AMS IS NOT RESPONSIBLE FOR QUALITY OF INSTALLATION, INSPECTIONS, NOR ACCEPTANCE OF FOUNDATION. ANY REVIEW PERFORMED BY AMS SHALL BE CONSIDERED A COURTESY TO ASSIST WITH THE OVERALL PROJECT SUCCESS AND DOES NOT REMOVE THE CONTRACTOR'S RESPONSIBILITY TO COMPLY WITH PLANS AND SPECIFICATIONS. CONTRACTOR PERFORMING FOUNDATION INSTALLATION IS RESPONSIBLE TO ENSURE THE FOUNDATION IS COMPLETED PER PLANS, SPECIFICATION'S, AND MEETS TOLERANCES FOR MODULAR BUILDINGS AS DESCRIBED BELOW.

CRAWLSPACE TO BE 18" CLEAR MINIMUM FROM TOP OF STEM WALL TO TOP OF CONCRETE SLURRY. CONCRETE SLURRY (IF APPLICABLE) TO BE MIN 2" THICK, AND SLOPED TO UNDERFLOOR DRAINAGE (DRAINAGE TO COMPLY WITH IR 16-1)
TOP OF STEM WALL CANNOT BE MORE THAN 1/8" OUT OF PLANE, PLUMB AND LEVEL (HORIZONTAL, VERTICAL AND SQUARE, DIAGONAL) OVER THE OVERALL LENGTH AND WIDTH OF THE FOUNDATION FOOTPRINT.
AMS WILL NOT PROVIDE SUPERVISION NOR SIGN OFF ON WORK PERFORMED BY OTHERS.

IN THE EVENT ENGINEERING IS REQUIRED TO ACCOMMODATE ERROR'S OR OMISSION'S, REWORK, OR ADDITIONAL COORDINATION/ENGINEERING ALL EXPENSES SHALL BE REIMBURSED TO AMS.

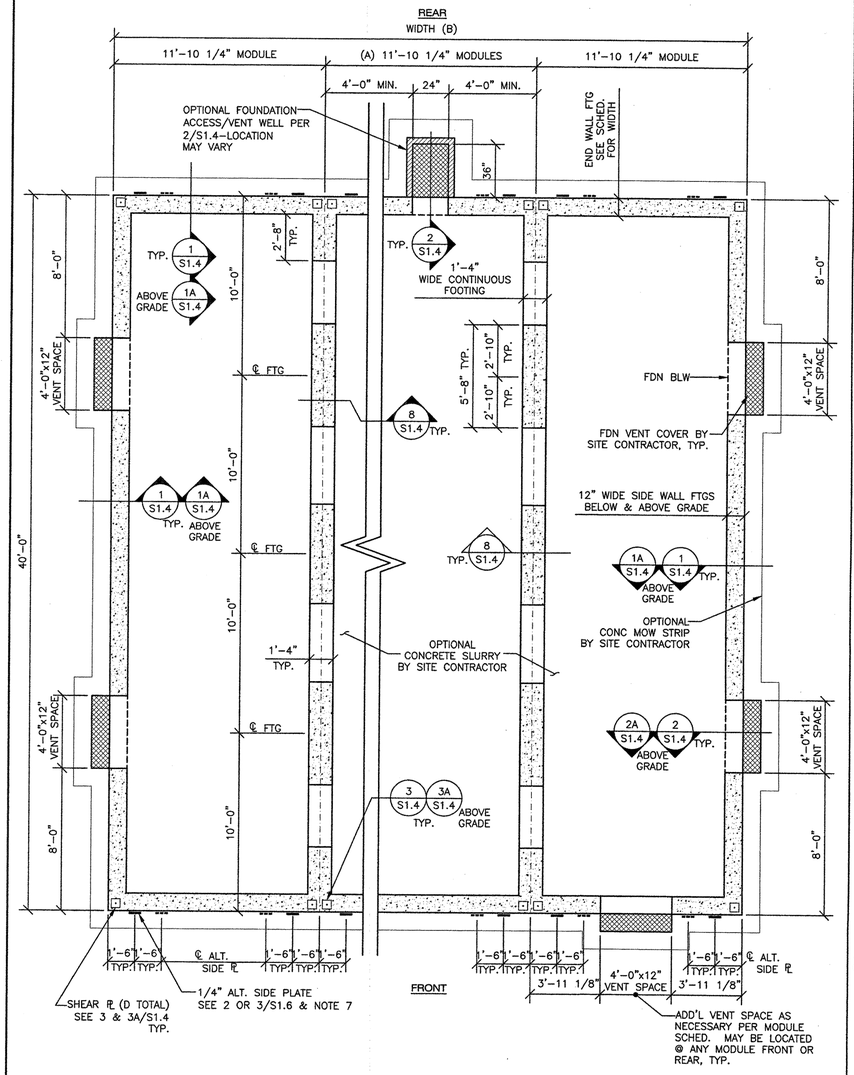

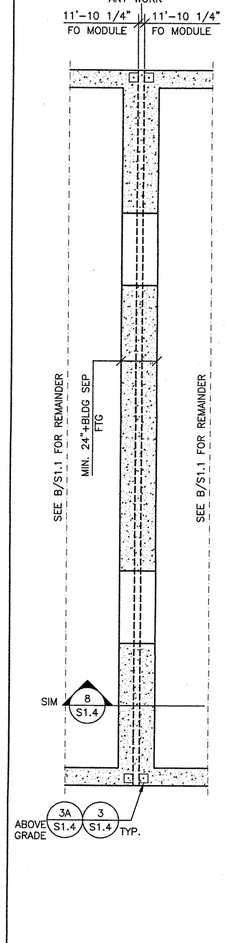

CONCRETE FOUNDATION PLAN (PLYWOOD OR STRUCTO-CRETE FLOOR)[9] 50 PSF LIVE LOAD + 15 PSF PARTITION LOAD — A

SCALE: 1/4"=1'-0"

FOUNDATION PLAN COMBINED — A1

SCALE: 1/4"=1'-0"

1. DO NOT INSTALL BUILDING IN AREAS OF WATER FLOW LINES.
2. ULTIMATE 28-DAY CONCRETE COMPRESSIVE STRENGTH SHALL BE 3000 PSI MIN. PER TITLE 24, PART 2, SECTION 1905A.1.1 PROPORTIONED PER ACI 318-11 SECTION 5.2.
3. THE REINFORCING BARS MUST BE TESTED PER TITLE 24, PART 2, SECTION 1913A.2. TEST OF REINFORCING BARS MAY BE WAIVED BY THE STRUCTURAL ENGINEER WITH THE APPROVAL OF DSA FOR ONE-STORY BUILDING, PROVIDED CERTIFIED MILL TEST REPORTS ARE PROVIDED FOR EACH SHIPMENT OF SUCH REINFORCEMENT. THE CEMENT SHALL BE CERTIFIED PER SECTION 1913A.1.
4. REINFORCING STEEL 60,000 PSI MINIMUM, PER ASTM A615.
5. MINIMUM SOIL BEARING CAPACITY 1500 PSF.
6. DESIGN SOIL BEARING CAPACITY 1500 PSF.
7. ALTERNATE SIDE PLATES MUST COMPLETELY REPLACE TYPICAL SHEAR PLATES ALONG ANY ONE MODULE LINE. (4 TOTAL ALTERNATE SIDE PLATES @ INTERIOR MODULE LINE AND 2 TOTAL ALTERNATE SIDE PLATES @ EXTERIOR MODULE LINE.) COMBINATION OF TYPICAL SHEAR PLATES AND ALTERNATE SIDE PLATES ALONG ANY ONE LINE IS NOT PERMITTED.
8. PROJECT ARCHITECT SHOULD VERIFY THE NET AREA OF THE VENT COVER BE EQUAL TO OR LARGER THAN THE VENT AREA REQUIRED SHOWN ON THE TABLE.
9. 3/4" STRUCTO-CRETE OVER LIGHT GA. FLOOR JOIST SHEET PER S3.0 IS CONSIDERED PLYWOOD OR STRUCTO-CRETE DESIGN AND MATCHES WITH DETAIL A FOR FOUNDATION PLAN. 1/2" STRUCTO-CRETE OVER B-DECK PER SHEET S3.1 SHALL USE DETAIL B FOR FOUNDATION PLAN.

NOTES

BLDG SIZE (FT)	TOTAL # OF 12' WIDE MODULES	"A" TOTAL # OF CENTER MODULES	"B" TOTAL BLDG WIDTH	TOTAL FLOOR AREA (FT^2)	"C" MIN. TOTAL # 4'x12" VENTS REQ'D	NET VENT AREA REQ'D (FT^2)	NET VENT AREA PROVIDED (FT^2)	"D" TOTAL # OF TYPICAL SHEAR ℄'s
☐ 24x40	2	0	23'-8 ½"	960	4	6.4	16.0	8
☐ 36x40	3	1	35'-6 ¾"	1440	4	9.6	16.0	12
☐ 48x40	4	2	47'-5"	1920	4	12.8	16.0	16
☐ 60x40	5	3	59'-3¼"	2400	4	16.0	16.0	20
☐ 72x40	6	4	71'-1½"	2880	5	19.2	20.0	24
☐ 84x40	7	5	82'-11¾"	3360	6	22.4	24.0	28
☐ 96x40	8	6	94'-10"	3840	7	25.6	28.0	32
☐ 108x40	9	7	106'-8¼"	4320	8	28.8	32.0	36
☐ 120x40	10	8	118'-6½"	4800	8	32.0	32.0	40

NOT USED

NOT USED

MODULE SCHEDULE

CONCRETE FOUNDATION PLAN (CONCRETE FLOOR)[9] 50 PSF LIVE LOAD + 15 PSF PARTITION LOAD — B

SCALE: 1/4"=1'-0"

FOUNDATION PLAN COMBINED — B1

SCALE: 1/4"=1'-0"

1. DO NOT INSTALL BUILDING IN AREAS OF WATER FLOW LINES.
2. ULTIMATE 28-DAY CONCRETE COMPRESSIVE STRENGTH SHALL BE 3000 PSI MIN. PER TITLE 24, PART 2, SECTION 1905A.1.1 PROPORTIONED PER ACI 318-11 SECTION 5.2.
3. THE REINFORCING BARS MUST BE TESTED PER TITLE 24, PART 2, SECTION 1913A.2. TEST OF REINFORCING BARS MAY BE WAIVED BY THE STRUCTURAL ENGINEER WITH THE APPROVAL OF DSA FOR ONE-STORY BUILDING, PROVIDED CERTIFIED MILL TEST REPORTS ARE PROVIDED FOR EACH SHIPMENT OF SUCH REINFORCEMENT. THE CEMENT SHALL BE CERTIFIED PER SECTION 1913A.1.
4. REINFORCING STEEL 60,000 PSI MINIMUM, PER ASTM A615.
5. MINIMUM SOIL BEARING CAPACITY 1500 PSF.
6. DESIGN SOIL BEARING CAPACITY 1500 PSF.
7. ALTERNATE SIDE PLATES MUST COMPLETELY REPLACE TYPICAL SHEARPLATES ALONG ANY ONE MODULE LINE. AT THE LOW SEISMIC CONDITION, USE 4 TOTAL ALTERNATE SIDE PLATES @ INTERIOR MODULE LINES AND 2 TOTAL ALTERNATE SIDE PLATES @ EXTERIOR MODULE LINES. AT THE HIGH SEISMIC CONDITION, USE 8 TOTAL ALTERNATE SIDE PLATES @ INTERIOR MODULE LINES AND 4 TOTAL ALTERNATE SIDE PLATES @ EXTERIOR MODULE LINES. (REFER TO MODULE SCHEDULE UNDER "E" SHEAR PLATES.) COMBINATION OF TYPICAL SHEAR PLATES AND ALTERNATE SIDE PLATES ALONG ANY ONE LINE IS NOT PERMITTED.
8. PROJECT ARCHITECT SHOULD VERIFY THE NET AREA OF THE VENT COVER BE EQUAL TO OR LARGER THAN THE VENT AREA REQUIRED SHOWN ON THE TABLE.

NOTES

BLDG SIZE (FT)	TOTAL # OF 12' WIDE MODULES	"A" TOTAL # OF CENTER MODULES	"B" TOTAL BLDG WIDTH	TOTAL FLOOR AREA (FT^2)	"C" MIN. TOTAL # 4'x12" VENTS REQ'D	NET VENT AREA REQ'D (FT^2)	NET VENT AREA PROVIDED (FT^2)	"D" TOTAL # OF TYPICAL SHEAR ℄'s
☒ 24x40	2	0	23'-8 ½"	960	4	6.4	16.0	8
☐ 36x40	3	1	35'-6 ¾"	1440	4	9.6	16.0	12
☐ 48x40	4	2	47'-5"	1920	4	12.8	16.0	16
☐ 60x40	5	3	59'-3¼"	2400	4	16.0	16.0	20
☐ 72x40	6	4	71'-1½"	2880	5	19.2	20.0	24
☐ 84x40	7	5	82'-11¾"	3360	6	22.4	24.0	28
☐ 96x40	8	6	94'-10"	3840	7	25.6	28.0	32
☐ 108x40	9	7	106'-8¼"	4320	8	28.8	32.0	36
☐ 120x40	10	8	118'-6½"	4800	8	32.0	32.0	40

	ENDWALL FTG WIDTH		"E" TOTAL # OF ALT. SIDE ℄'s-SEE 2 OR 3/S1.6		
	W/SHEAR ℄'s	W/ALT. SIDE ℄'s	EXTERIOR LINES	INTERIOR LINES	LEGEND
☒ LOW SEISMIC	12"	12"	2	4	
☐ HIGH SEISMIC	13"	12"	4	8	

MODULE SCHEDULE

American Modular Systems
787 Spreckels Ave. Manteca, CA 95336
Phone (209) 825-1921 - Fax (209) 825-7018
americanmodular.com

MODULAR MANUFACTURER PROPRIETARY STATEMENT

THESE DRAWINGS AND THE MATERIAL CONTAINED THEREIN ARE THE PROPERTY OF AMERICAN MODULAR SYSTEMS, INC. (AMS) AND SHALL NOT BE REPRODUCED, COPIED OR OTHERWISE DISPOSED OF DIRECTLY OR INDIRECTLY AND SHALL NOT BE USED IN WHOLE OR IN PART TO ASSIST IN THE MAKING OF OR FOR THE PURPOSE OF FURNISHING ANY INFORMATION FOR THE MAKING OF DRAWINGS, PRINTS, APPARATUS OR PARTS THEREOF WITHOUT THE FULL KNOWLEDGE AND WRITTEN CONSENT OF AMS. ALL PATENTABLE MATERIAL CONTAINED HEREIN AND ORIGINATING WITH AMS SHALL BE THE SOLE PROPERTY OF AMS.

PRE-CHECKED SET NAME

24' x 40' THRU 120' x 40' BUILDINGS

SITE SPECIFIC PROJECT NAME

SHEET TITLE

CONCRETE FOUNDATION PLAN
50 PSF LIVE LOAD
+15 PSF PARTITION LOAD

MANUFACTURER PROFESSIONAL OF RECORD ON PC

LICENSED ARCHITECT RANDALL PATRICK CAVANAGH No. C12631 Ren. 03-31-17 STATE OF CALIFORNIA

REGISTERED PROFESSIONAL ENGINEER MARK D. PARKER No. S3350 Exp:03/31/16 STRUCTURAL STATE OF CALIFORNIA

05/19/2015

PROJECT SPECIFIC STATE AGENCY APPROVAL

IDENTIFICATION STAMP DIV. OF THE STATE ARCHITECT
02 116495
AC ___ FLS ✓ SS ___
DATE 12-18-2014

ORIGINAL PC STATE AGENCY APPROVAL

IDENTIFICATION STAMP DIV. OF THE STATE ARCHITECT CA. DEPT. OF GENERAL SERVICES
PC 02-113876
AC ___ FLS ___ SS OPEN
DATE 6/22/15

PRE-CHECK (PC) DOCUMENT — CODE: 2013 CBC
A SEPARATE PROJECT APPLICATION FOR CONSTRUCTION IS REQUIRED

REVISIONS
1
2
3
4

DRAWN BY:
SCALE: AS NOTED
DATE:

SHEET NUMBER

S1.1

02-113876 • 24' x 40' - 120' x 40' CHASSIS S721 Sheet: 4/1/2015 3:59 PM PLOTTED: 4/1/2015

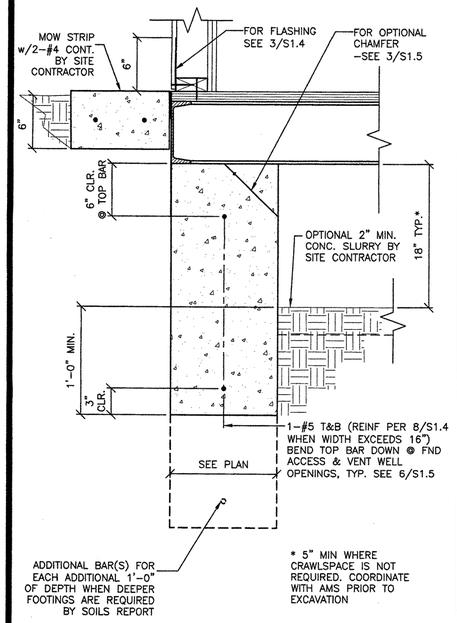

BELOW GRADE SECTION

SCALE:1 1/2"=1'-0" | 1

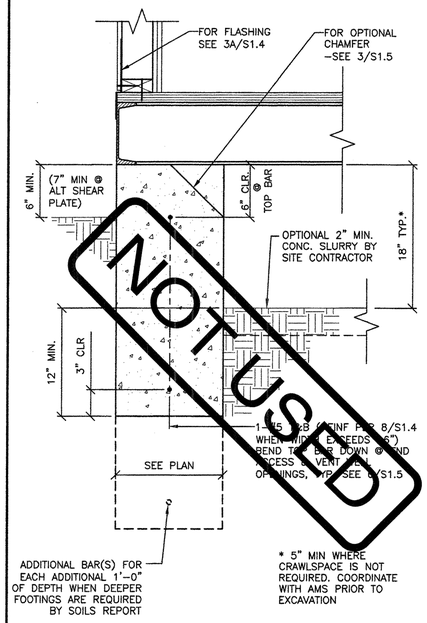

ABOVE GRADE SECTION

SCALE:1 1/2"=1'-0" | 1A

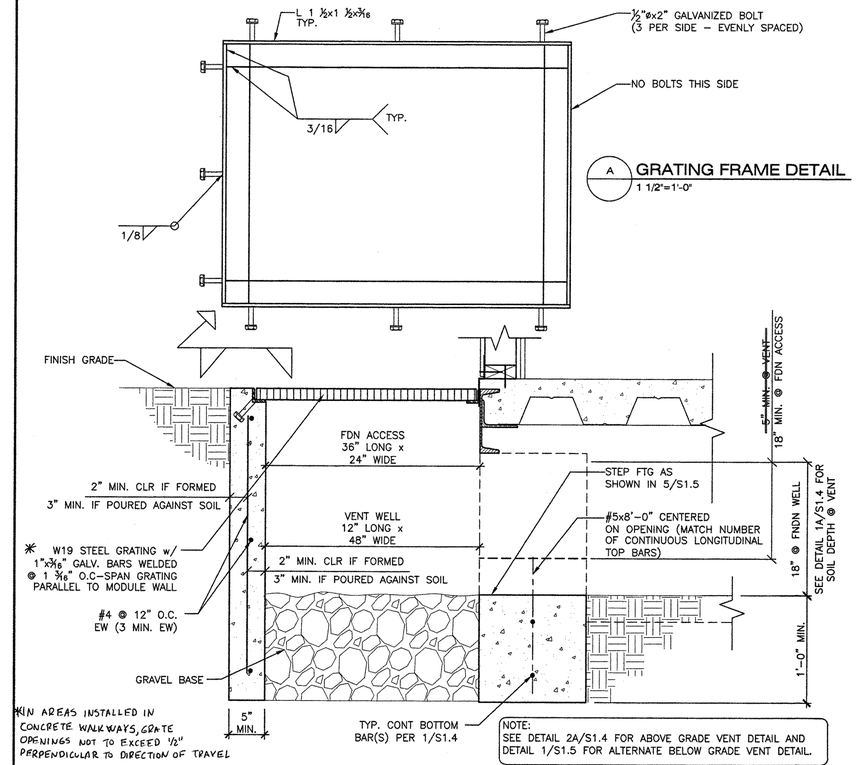

BELOW GRADE VENT DETAIL

SCALE: 1 1/2"=1'-0" | 2

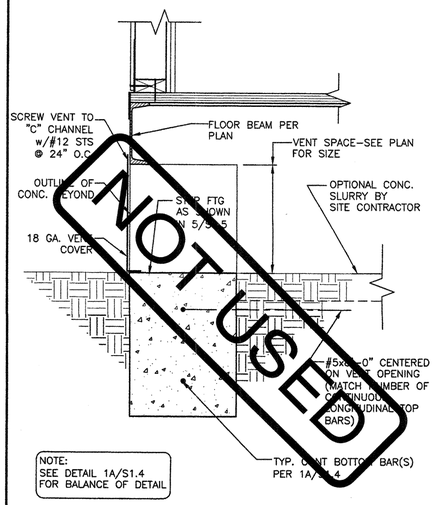

ABOVE GRADE SECTON/VENT DETAIL

SCALE:1 1/2"=1'-0" | 2A

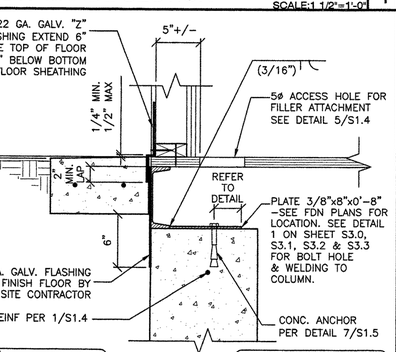

BELOW GRADE SECTION / PLATE ATTACHMENT

SCALE:1 1/2"=1'-0" | 3

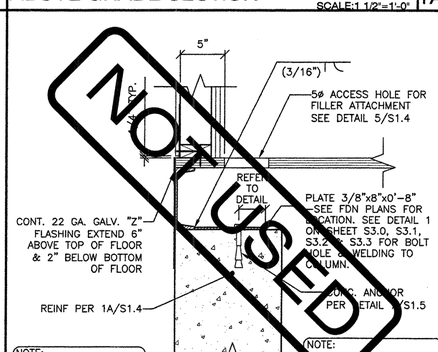

ABOVE GRADE SECTION / PLATE ATTACHMENT

SCALE:1 1/2"=1'-0" | 3A

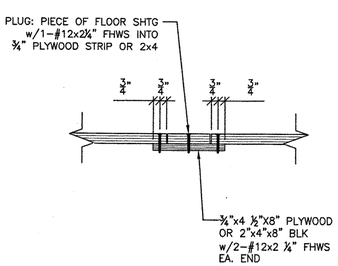

FILLER ACCESS HOLE DETAIL

SCALE:1 1/2"=1'-0" | 5

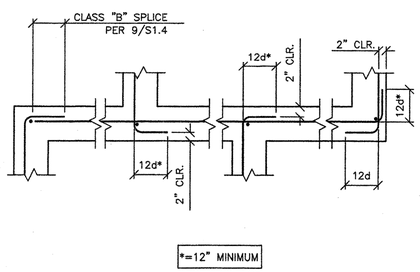

TYPICAL FOOTING REINFORCING @ CORNER & INTERSECTIONS

SCALE:1 1/2"=1'-0" | 6

REINFORCING SCHEDULE		
FOOTING WIDTH (IN.)	CONTINUOUS LONGITUDINAL REINFORCING (EACH LEVEL)	TRANSVERSE REINFORCING (EACH LEVEL)
≤16"	(1) #5	NOT REQ'D
>16"≤24"	(2) #5	#5'S @ 24" O.C.
>24"≤36"	(3) #5	#5'S @ 24" O.C.

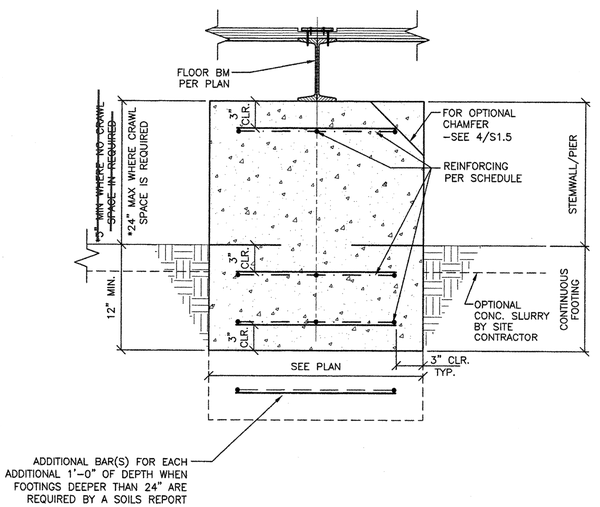

CENTER PIER SECTION

SCALE:1 1/2"=1'-0" | 8

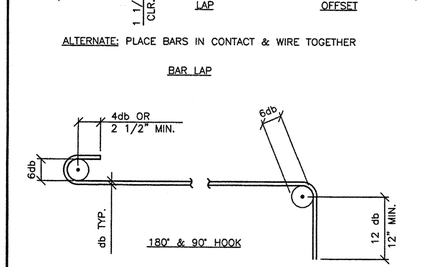

BAR SIZE #	DEVELOPMENT LENGTH[2]			TYPICAL CLASS B LAP SPLICE LENGTH					
	3000 PSI (IN)	3500 PSI (IN)	4000 PSI (IN)	3000 PSI		3500 PSI		4000 PSI	
				TOP[1] (IN)	BOTTOM (IN)	TOP[1] (IN)	BOTTOM (IN)	TOP[1] (IN)	BOTTOM (IN)
3	13	12	12	21	16	20	16	20	16
4	17	16	15	28	22	26	20	24	19
5	21	20	18	35	27	33	25	30	24
6	25	23	22	42	32	39	30	36	28

NOTES: THE ABOVE TABLE IS BASED ON GRADE 60 STEEL
1. TOP BARS ARE ANY BARS WITH MORE THAN 12" OF CONCRETE PLACED BELOW.
2. DEVELOPMENT LENGTH IS CALCULATED FOR TYP. BARS – Ψ_t=1.0

IDENTIFICATION STAMP DIV. OF THE STATE ARCHITECT 02 116495 AC – FLS SS DATE 12-18-2017

TYPICAL REINFORCING BENDS

SCALE:1 1/2"=1'-0" | 9

American Modular Systems
787 Spreckels Ave. Manteca, CA 95336
Phone (209) 825-1921 - Fax (209) 825-7018
americanmodular.com

MODULAR MANUFACTURER PROPRIETARY STATEMENT
THESE DRAWINGS AND THE MATERIAL CONTAINED THEREIN ARE THE PROPERTY OF AMERICAN MODULAR SYSTEMS, INC. (AMS) AND SHALL NOT BE REPRODUCED, COPIED OR OTHERWISE DISPOSED OF DIRECTLY OR INDIRECTLY AND SHALL NOT BE USED IN WHOLE OR IN PART TO ASSIST IN THE MAKING OF OR FOR THE PURPOSE OF FURNISHING ANY INFORMATION FOR THE MAKING OF DRAWINGS, PRINTS, APPARATUS OR PARTS THEREOF WITHOUT THE FULL KNOWLEDGE AND WRITTEN CONSENT OF AMS. ALL PATENTABLE MATERIAL CONTAINED HEREIN AND ORIGINATING WITH AMS SHALL BE THE SOLE PROPERTY OF AMS.

PRE–CHECKED SET NAME

24' x 40' THRU 120' x 40' BUILDINGS

SITE SPECIFIC PROJECT NAME

SHEET TITLE

CONCRETE FOUNDATION DETAILS

MANUFACTURER PROFESSIONAL OF RECORD ON PC

LICENSED ARCHITECT RANDALL PATRICK GAMMAGE No. C12631 Ren. 03-31-17 STATE OF CALIFORNIA

REGISTERED PROFESSIONAL ENGINEER MANNY D. PHEGLEY No. 53360 MANUFACTURED HOUSING

PROJECT SPECIFIC STATE AGENCY APPROVAL

Rev 1
APPROVED
DIV. OF THE STATE ARCHITECT
SACRAMENTO REGIONAL OFFICE
AC FLS SS
APP. # 113876 DATE 7-5-16

ORIGINAL PC STATE AGENCY APPROVAL

IDENTIFICATION STAMP DIV. OF THE STATE ARCHITECT CA. DEPT. OF GENERAL SERVICES
PC 02–113876
AC FLS SS
DATE

PRE–CHECK (PC) DOCUMENT – CODE: 2013 CBC
A SEPARATE PROJECT APPLICATION FOR CONSTRUCTION IS REQUIRED

REVISIONS
1 05/17/2016 – PC REVISION
2
3
4

DRAWN BY:
SCALE: AS NOTED
DATE:

SHEET NUMBER

S1.4

02-113876 – 24' x 40' – 120' x 40' EXPOSED STEEL SHEETS 1/5/2016 2:23 PM PLOTTED 1/5/2016 2:23 PM

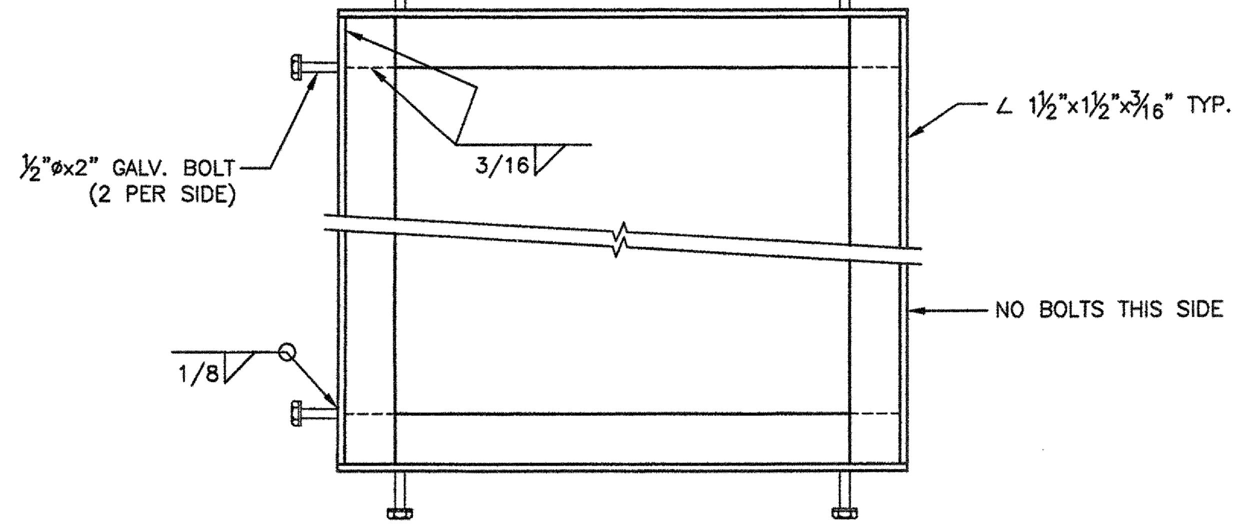

A GRATING FRAME DETAIL
3"=1'-0"

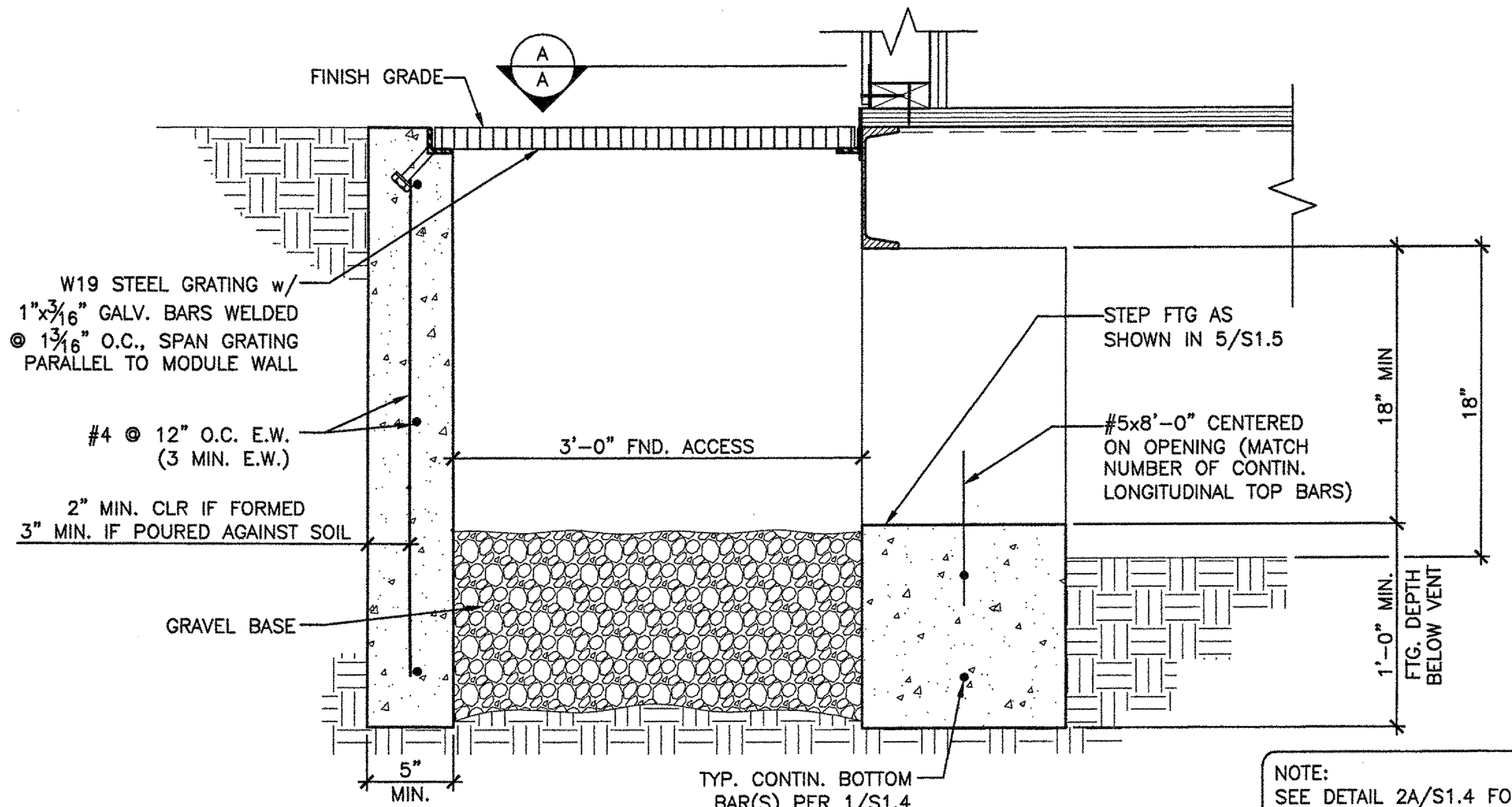

NOTE:
SEE DETAIL 2A/S1.4 FOR ABOVE GRADE VENT DETAIL.

BELOW GRADE ACCESS/VENT DETAIL — 1
SCALE: 1 1/2"=1'-0"

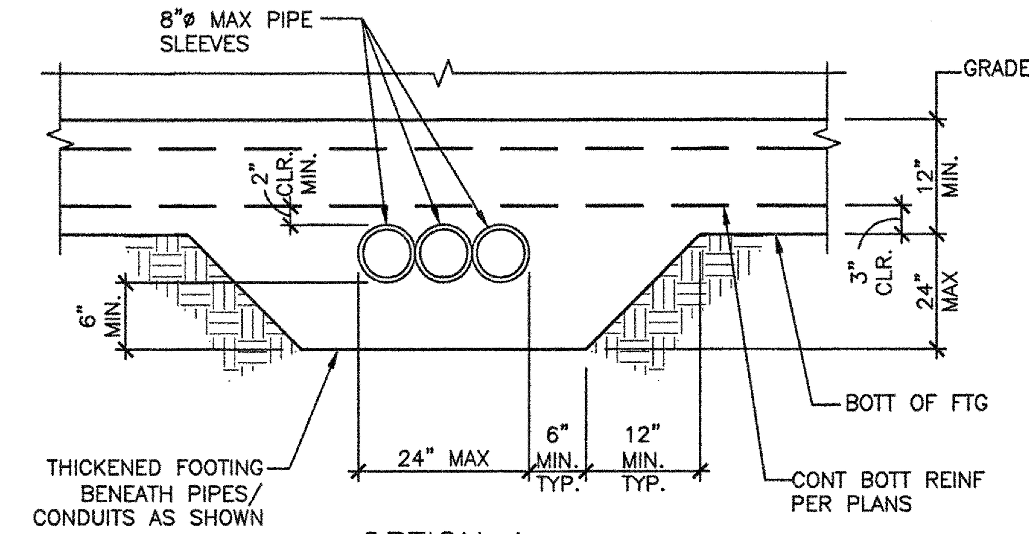

OPTION A

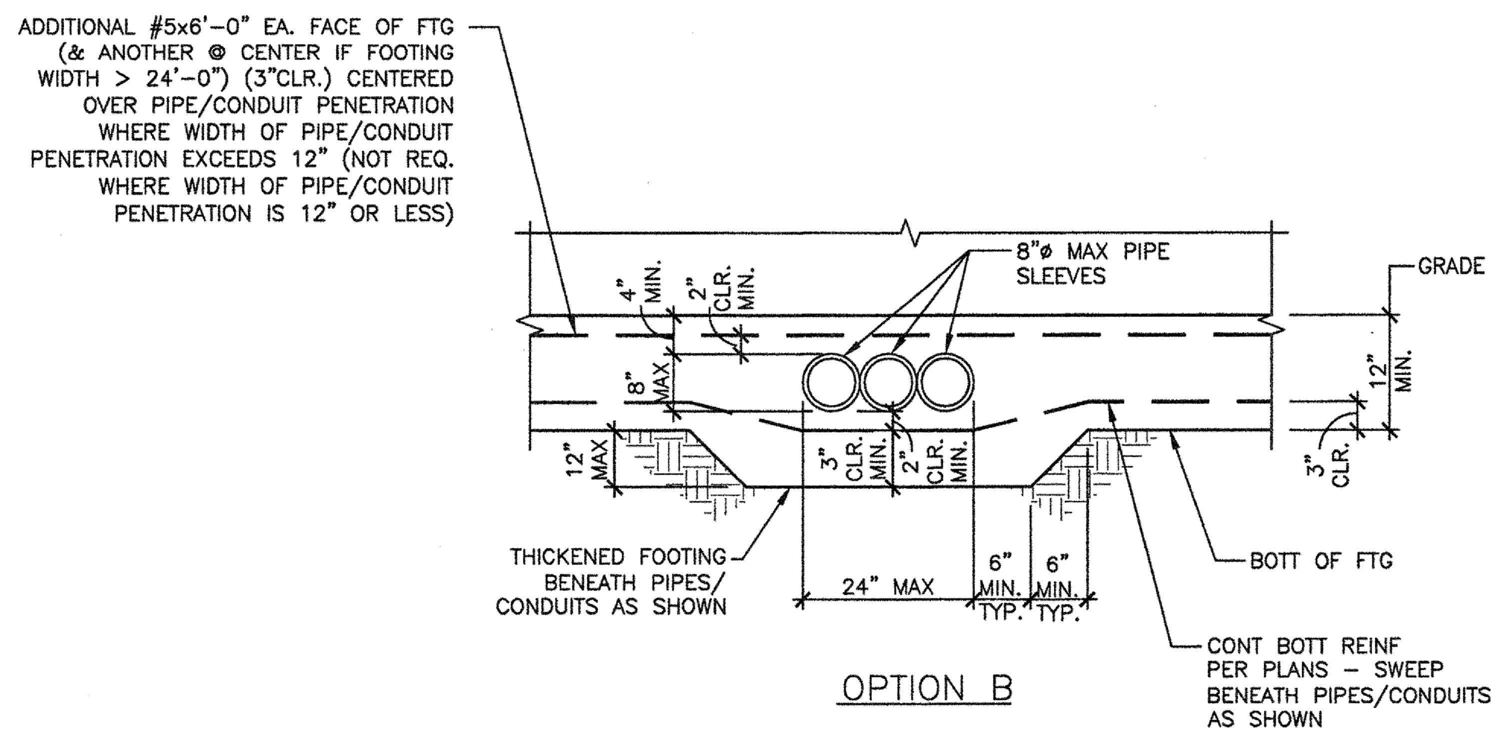

OPTION B

NOTES:

1. AS AN OPTION TO INDIVIDUAL PIPE SLEEVES THE FOOTING MAY BE BLOCKED OUT FOR MULTIPLE PIPES (10" HIGH x 24" WIDE MAX @ OPTION "A", 8" HIGH x 24" WIDE MAX OPTION "B") OR INDIVIDUAL PROVIDE 1" MIN. CLEARANCE ALL AROUND BTWN PIPES/CONDUITS & BLOCKOUT/SLEEVES & FILL w/ CAULK.
2. CONCRETE SHALL BE WELL CONSOLIDATED AROUND & UNDER PIPES, CONDUITS, SLEEVES, BLOCKOUTS TO PREVENT CONCRETE VOIDS.
3. PROVIDE 2" CLEAR MIN BETWEEN BLOCKOUT SLEEVES AND REINFORCEMENT.
4. WHERE TOP OF PIPES/CONDUITS ARE 12" OR MORE BELOW THE BOTTOM OF THE FOOTING, THICKENED FOOTING AROUND PIPES/CONDUITS IS NOT REQUIRED. BACKFILL & COMPACT TO 95% OVER PIPES / CONDUITS PRIOR TO PLACING FOOTING.

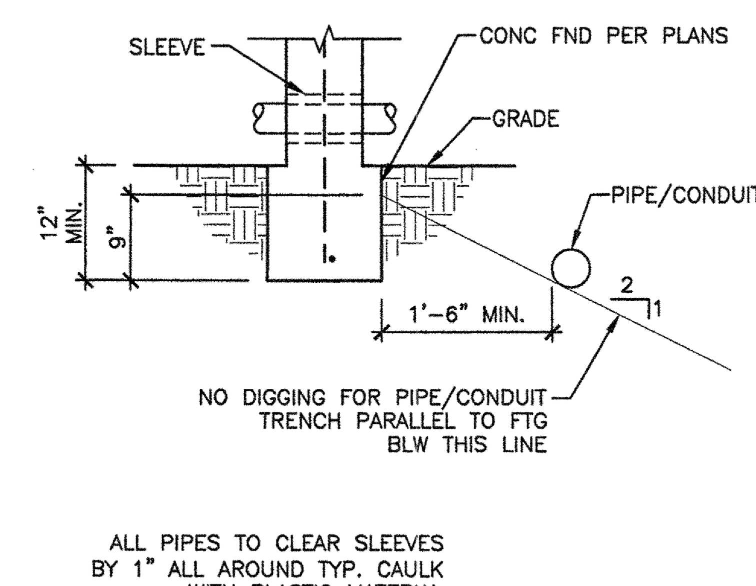

ALL PIPES TO CLEAR SLEEVES BY 1" ALL AROUND TYP. CAULK WITH PLASTIC MATERIAL

PIPE SLEEVE DETAIL — 2
SCALE: 3/4"=1'-0"

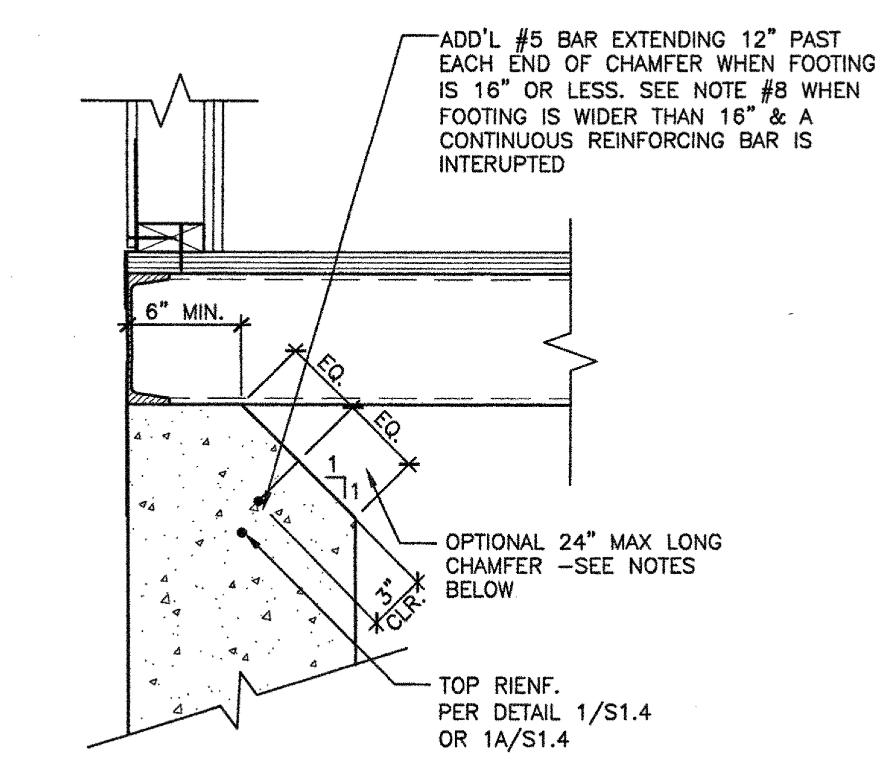

NOTES:
1. CHAMFER MAY BE LOCATED ALONG ALL LOCATIONS OF THE PERIMETER OF THE BUILDING FOUNDATION UNLESS OTHERWISE NOTED ON PLAN OR AS DESCRIBED BELOW.
2. CHAMFER SHALL NOT BE LOCATED WITHIN 2'–6" OF THE CORNERS OF THE BUILDING FOUNDATION. CHAMFER SHALL NOT BE LOCATED WITHIN THE MINIMUM EDGE AND SIDE DISTANCES REQUIRED IN DETAIL 7/S1.5.
3. CHAMFER SHALL NOT BE LOCATED WITHIN 1'–6" OF ALTERNATE SIDE PLATE LOCATIONS
4. CHAMFERS AT FRONT OR REAR END WALL FOOTINGS SHALL NOT BE LOCATED WITHIN 2'–6" OF A MODULE LINE
5. CHAMFERS SHALL NOT BE LOCATED WITHIN 1'–6" OF UTILITY OPENINGS PER SHEET S1.7
6. CHAMFER MAY OCCUR AT THE ENDS OF VENT OR ACCESS OPENINGS
7. BOTTOM OF CHAMFER SHALL NOT BE LOWER THAN FINISHED GRADE
8. WHERE THE FOOTING IS WIDER THAN 16" AND THE CHAMFER INTERUPTS A CONTINUOUS LONGITUDINAL REINFORCING BAR, PROVIDE AN ADDITIONAL #5 x 6'–0" BAR 3" CLEAR AND CENTERED ON THE CHAMFER
9. FOR ALL ITEMS NOT SHOWN OR NOTED SEE DETAILS 1/S1.4 & 1A/S1.4.

CHAMFER DETAILS @ PERIMETER — 3
SCALE:1 1/2"=1'-0"

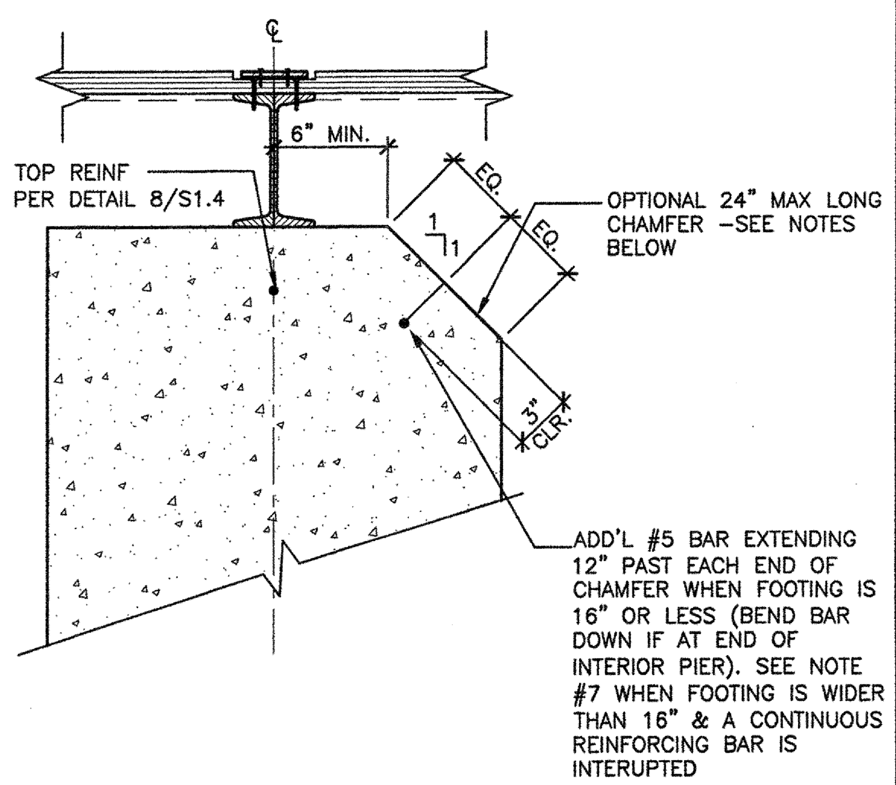

NOTES:
1. CHAMFER MAY BE LOCATED ALONG ALL LOCATIONS OF INTERIOR FOOTING OF THE BUILDING FOUNDATION UNLESS OTHERWISE NOTED ON PLAN OR AS DESCRIBED BELOW.
2. CHAMFER SHALL NOT BE LOCATED WITHIN 2'–6" OF THE ENDS OF THE BUILDING. CHAMFER SHALL NOT BE LOCATED WITHIN THE MINIMUM EDGE AND SIDE DISTANCES REQUIRED IN DETAIL 7/S1.5.
3. CHAMFER MAY OCCUR ON BOTH SIDES OF THE FOOTING CONCURRENTLY.
4. CHAMFER SHALL NOT BE LOCATED WITHIN 1'–6" OF UTILITY OPENING PER SHEET S1.7
5. CHAMFER MAY OCCUR AT THE ENDS OF INTERIOR PIERS
6. BOTTOM OF CHAMFER SHALL NOT BE LOWER THAN FINISHED GRADE
7. WHERE THE FOOTING IS WIDER THAN 16" AND THE CHAMFER ITERUPTS A CONTINUOUS LONGITUDINAL REINFORING BAR, PROVIDE AN ADDITIONAL #5 x 6'–0" BAR 3" CLEAR AND CENTERED ON THE CHAMFER (BEND BAR DOWN IF AT END OF INTERIOR PIER)
8. FOR ALL ITEMS NOT SHOWN OR NOTED –SEE DETAIL 8/S1.4.

CHAMFER DETAILS @ INTERIOR — 4
SCALE:1 1/2"=1'-0"

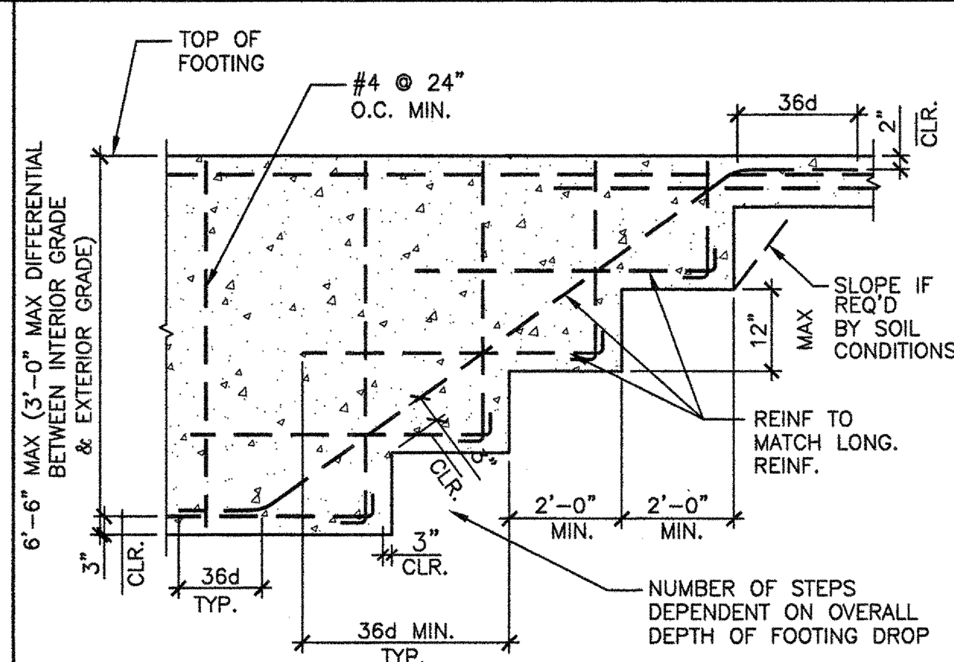

NOTE: SEE SECTIONS FOR FTG WIDTH & REINF

TYPICAL STEPPED FOOTING — 5
SCALE:1 1/2"=1'-0"

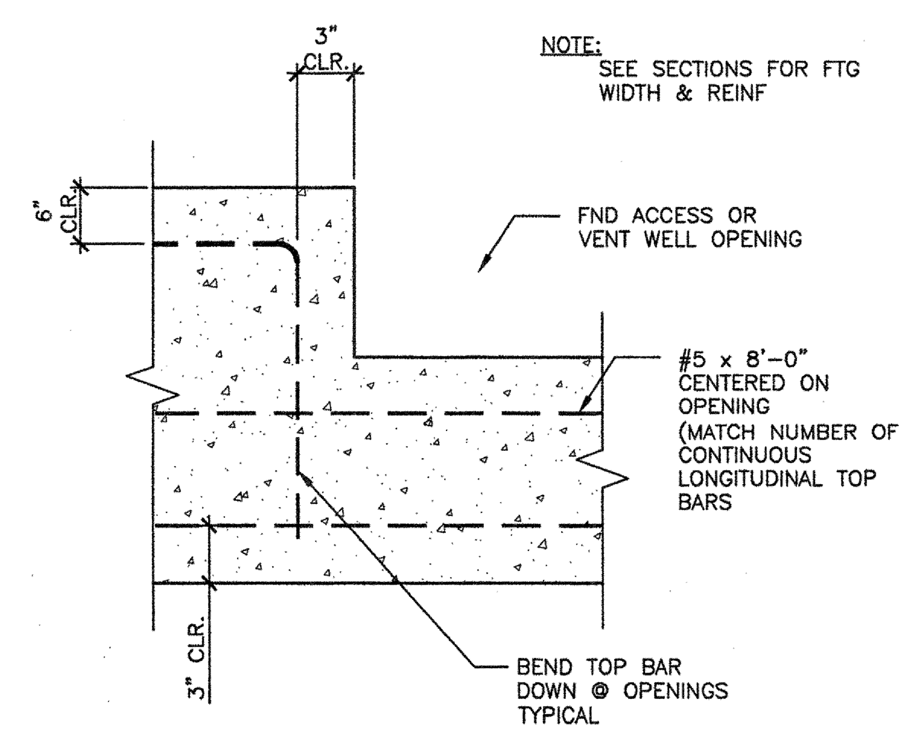

VENT/ACCESS VENT OPENING DETAIL — 6
SCALE:1 1/2"=1'-0"

LOW SEISMIC

CONCRETE ANCHOR SCHEDULE		
FLOOR LOAD	WOOD FLOOR ANCHOR SIZE*	CONCRETE FLOOR ANCHOR SIZE*
50	1/2"ø	1/2"ø
50 + 15	1/2"ø	1/2"ø
100	1/2"ø	1/2"ø
150	1/2"ø	1/2"ø

*ANCHORS (OTHER THAN 3/4"ø) MAY BE EITHER "HILTI" KB–TZ OR 'SIMPSON" STRONG BOLTS PER TABLE BELOW.

HIGH SEISMIC (crossed out)

CONCRETE ANCHOR SCHEDULE		
FLOOR LOAD	WOOD FLOOR ANCHOR SIZE*	CONCRETE FLOOR ANCHOR SIZE**
50	1/2"ø	3/4"ø
50 + 15	1/2"ø	3/4"ø
100	1/2"ø	3/4"ø
150	1/2"ø	3/4"ø

*ANCHORS (OTHER THAN 3/4"ø) MAY BE EITHER "HILTI" KB–TZ OR 'SIMPSON" STRONG BOLTS PER TABLE BELOW.
** 3/4" ANCHORS MUST BE "HILTI" KB–TZ PER TABLE BELOW.

ANCHOR TYPE	HILTI KWIK KB-TZ ICC ESR-1917			SIMPSON STRONG-BOLT 2 ICC ESR-3037		
ANCHOR SIZE (IN)	½"ø	.	3/4"ø	½"ø	.	.
MIN EMBED (IN)	4"	.	5–3/4"	4–1/8"	.	.
INSTALLATION TORQUE (FT–LB)	40	.	110	60	.	.
CRITICAL DIM 'A' – MIN (IN)	6–3/4	.	7–3/4	6–3/4	.	.
CRITICAL DIM 'B' – MIN (IN)	6–1/4	.	6–1/4	6–1/4	.	.
CRITICAL DIM 'C' – MIN (IN)	5–3/4	.	6–3/4	5–3/4	.	.
CRITICAL DIM 'D' – MIN (IN)	5–1/4	.	6–1/4	5–1/4	.	.

1. TORQUE TEST PER CBC 1913A.7 TORQUE TEST – MANUFACTURER'S RECOMMENDED INSTALLATION TORQUE AS APPROVED IN AN ICC–ESR PER C.B.C 1913A.7
2. NORMAL WEIGHT CONCRETE WITH f'c= 3000 PSI TO COMPLY WITH 1913A.2 FOR MATERIAL TEST WAIVER.

IDENTIFICATION STAMP
DIV. OF THE STATE ARCHITECT
02 116405
AC – FLS – SS
DATE 12-18-2017

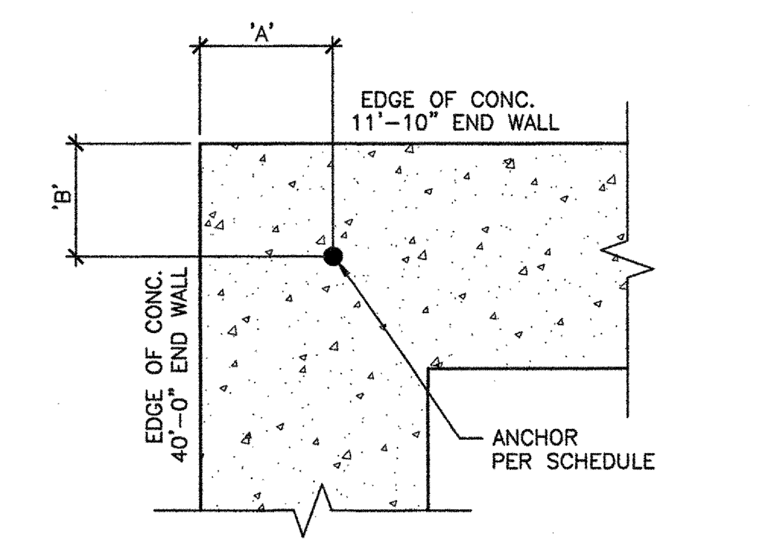

CRITICAL ANCHOR DIMENSIONS @ BUILDING CORNERS

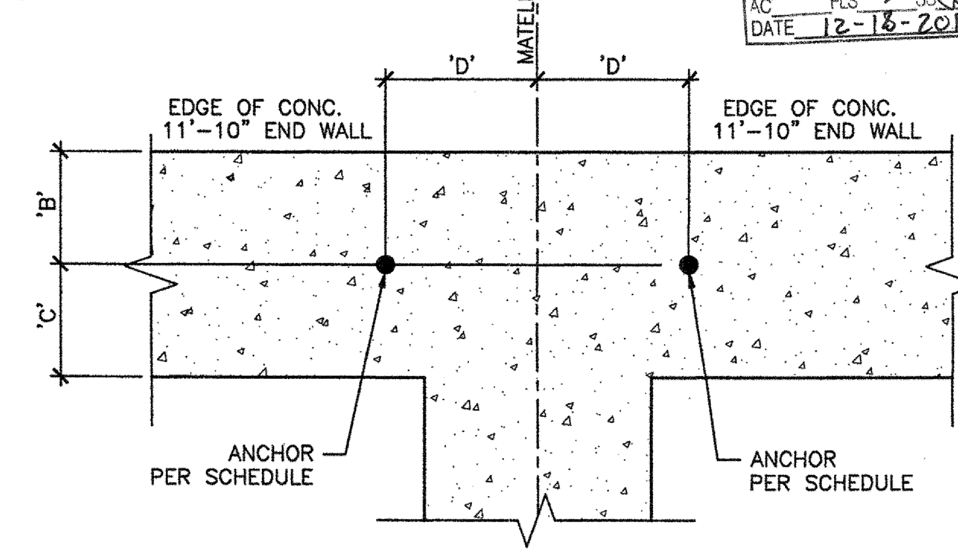

CRITICAL ANCHOR DIMENSIONS @ MATELINES

CONCRETE ANCHOR AND ANCHOR BOLT SCHEDULE — 7

American Modular Systems
787 Spreckels Ave. Manteca, CA 95336
Phone (209) 825-1921 - Fax (209) 825-7018
americanmodular.com

MODULAR MANUFACTURER PROPRIETARY STATEMENT
THESE DRAWINGS AND THE MATERIAL CONTAINED THEREIN ARE THE PROPERTY OF AMERICAN MODULAR SYSTEMS, INC. (AMS) AND SHALL NOT BE REPRODUCED, COPIED OR OTHERWISE DISPOSED OF DIRECTLY OR INDIRECTLY AND SHALL NOT BE USED IN WHOLE OR IN PART TO ASSIST IN THE MAKING OF OR FOR THE PURPOSE OF FURNISHING ANY INFORMATION FOR THE MAKING OF DRAWINGS, PRINTS, APPARATUS OR PARTS THEREOF WITHOUT THE FULL KNOWLEDGE AND WRITTEN CONSENT OF AMS. ALL PATENTABLE MATERIAL CONTAINED HEREIN AND ORIGINATING WITH AMS SHALL BE THE SOLE PROPERTY OF AMS.

PRE–CHECKED SET NAME
24' x 40' THRU 120' x 40' BUILDINGS

SITE SPECIFIC PROJECT NAME

SHEET TITLE
CONCRETE FOUNDATION DETAILS

MANUFACTURER PROFESSIONAL OF RECORD ON PC
LICENSED ARCHITECT RANDALL PATRICK CAVANAGH No. C12631 Ren. 03-31-17 STATE OF CALIFORNIA
REGISTERED PROFESSIONAL ENGINEER MANNY D. FRISCH No. S3380 STRUCTURAL STATE OF CALIFORNIA

PROJECT SPECIFIC STATE AGENCY APPROVAL
Rev 1
APPROVED
DIV. OF THE STATE ARCHITECT
SACRAMENTO REGIONAL OFFICE
AC – F/LS – SS
APP. # 02-113876 DATE 7-5-16

ORIGINAL PC STATE AGENCY APPROVAL
IDENTIFICATION STAMP
DIV. OF THE STATE ARCHITECT
CA. DEPT. OF GENERAL SERVICES
PC 02–113876
AC____ FLS____ SS____
DATE____

PRE–CHECK (PC) DOCUMENT – CODE: 2013 CBC
A SEPARATE PROJECT APPLICATION FOR CONSTRUCTION IS REQUIRED

REVISIONS
1. 05/17/2016 – PC REVISION
2.
3.
4.

DRAWN BY:
SCALE: AS NOTED
DATE:

SHEET NUMBER
S1.5

02–113876 – 24' x 40' – 120' x 40' EXPOSED STEEL SAVED: 1/8/2016 3:13 PM PLOTTED: 1/8/2016 3:15 PM

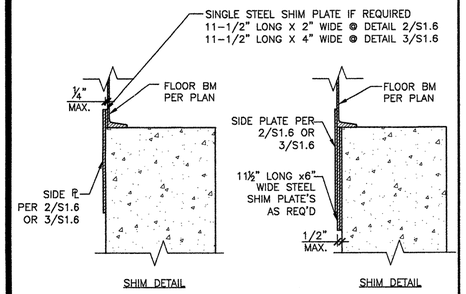

ALTERNATE SIDE PLATE SHIM DETAIL | 1

SCALE:1 1/2"=1'-0"

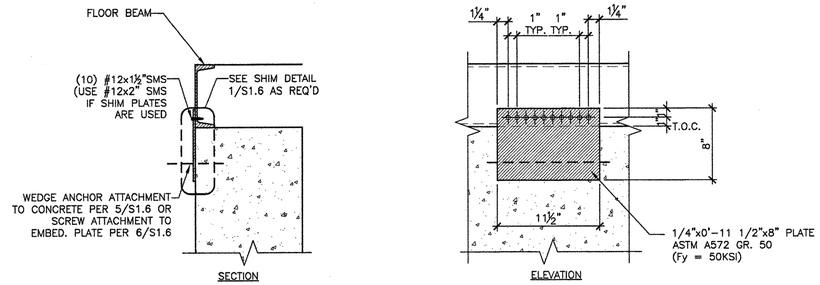

ALTERNATE SIDE PLATE DETAIL | 2

SCALE:1 1/2"=1'-0"

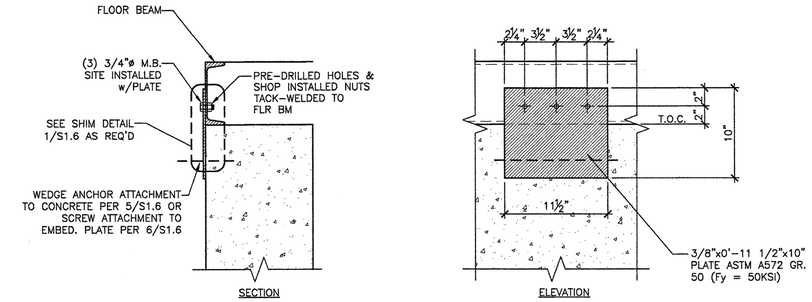

ALTERNATE SIDE PLATE DETAIL | 3

SCALE:1 1/2"=1'-0"

NOT USED | 4

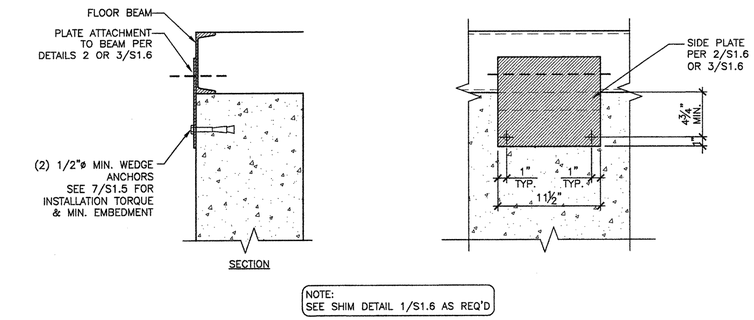

ALTERNATE SIDE PLATE BOTTOM ATTACHMENT DETAIL

SCALE:1 1/2"=1'-0"

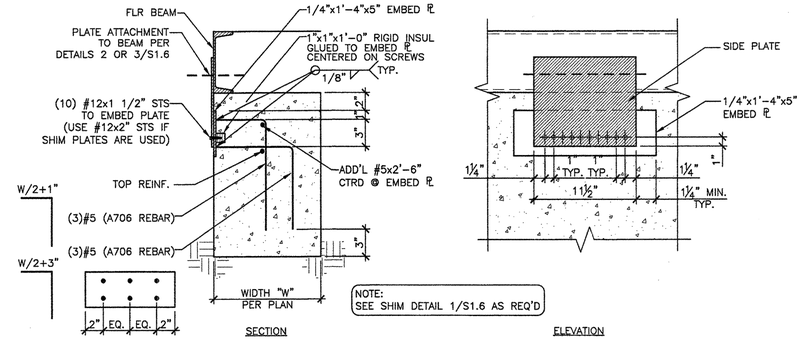

ALTERNATE SIDE PLATE ALTERNATE BOTTOM ATTACHMENT DETAIL

SCALE:1 1/2"=1'-0"

6

NOT USED | 7

NOT USED | 8

NOT USED | 9

NOT USED | 10

NOT USED | 11

NOT USED | 12

NOT USED | 13

NOT USED | 14

NOT USED | 15

NOT USED | 16

IDENTIFICATION STAMP
DIV. OF THE STATE ARCHITECT
02 116495
AC — FLS — SS
DATE 12-18-2017

American Modular Systems
787 Spreckels Ave. Manteca, CA 95336
Phone (209) 825-1921 - Fax (209) 825-7018
americanmodular.com

MODULAR MANUFACTURER PROPRIETARY STATEMENT

THESE DRAWINGS AND THE MATERIAL CONTAINED THEREIN ARE THE PROPERTY OF AMERICAN MODULAR SYSTEMS, INC. (AMS) AND SHALL NOT BE REPRODUCED, COPIED OR OTHERWISE DISPOSED OF DIRECTLY OR INDIRECTLY AND SHALL NOT BE USED IN WHOLE OR IN PART TO ASSIST IN THE MAKING OF OR FOR THE PURPOSE OF FURNISHING ANY INFORMATION FOR THE MAKING OF DRAWINGS, PRINTS, APPARATUS OR PARTS THEREOF WITHOUT THE FULL KNOWLEDGE AND WRITTEN CONSENT OF AMS. ALL PATENTABLE MATERIAL CONTAINED HEREIN AND ORIGINATING WITH AMS SHALL BE THE SOLE PROPERTY OF AMS.

PRE-CHECKED SET NAME

24' x 40' THRU 120' x 40' BUILDINGS

SITE SPECIFIC PROJECT NAME

SHEET TITLE

CONCRETE FOUNDATION DETAILS

MANUFACTURER PROFESSIONAL OF RECORD ON PC

LICENSED ARCHITECT BANGALI PATRICK GAUMACH No. C12631 Ren. 03-31-17 STATE OF CALIFORNIA

REGISTERED PROFESSIONAL ENGINEER MANNY G. FRIAS No. S3380 CIVIL STRUCTURAL CALIFORNIA

PROJECT SPECIFIC STATE AGENCY APPROVAL

Rev1
APPROVED
DIV. OF THE STATE ARCHITECT
SACRAMENTO REGIONAL OFFICE
AC — F/LS — SS
or
APP. # 113876 DATE 7-5-16

ORIGINAL PC STATE AGENCY APPROVAL

IDENTIFICATION STAMP
DIV. OF THE STATE ARCHITECT
CA. DEPT. OF GENERAL SERVICES
PC 02-113876
AC____ FLS____ SS____
DATE____

PRE-CHECK (PC) DOCUMENT - CODE: 2013 CBC
A SEPARATE PROJECT APPLICATION FOR CONSTRUCTION IS REQUIRED

REVISIONS

1 05/17/2016 - PC REVISION
2
3
4

DRAWN BY:

SCALE: AS NOTED

DATE:

SHEET NUMBER

S1.6

02-113876 - 24' x 40' - 120' x 40' APPROVED STEEL SHEETS - 1/6/2016 3:33 PM PLOTTED: 1/6/2016 3:33 PM

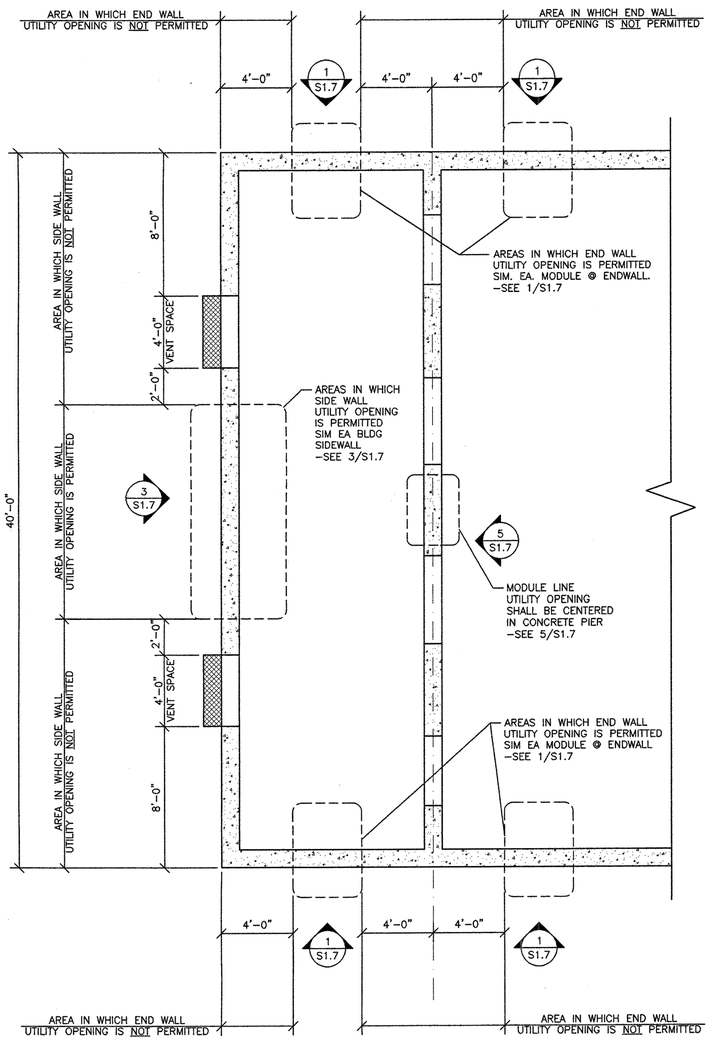

OPTIONAL UTILITY OPENINGS PLAN

SCALE: 1/4"=1'-0" | A

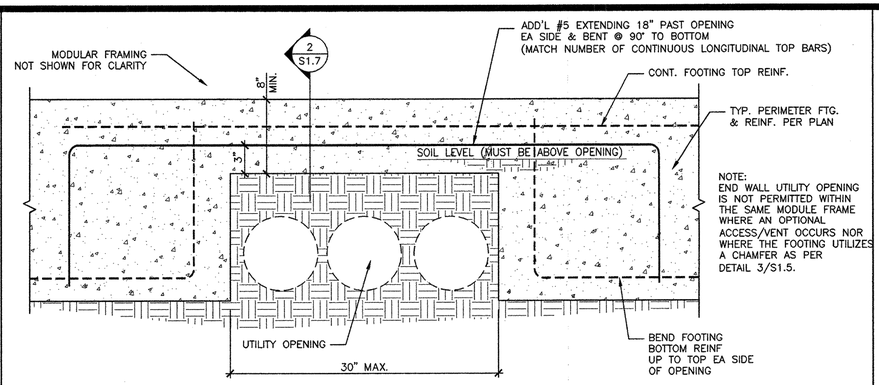

OPTIONAL UTILITY OPENINGS IN END WALL FOOTINGS

SCALE: 1 1/2"=1'-0" | 1

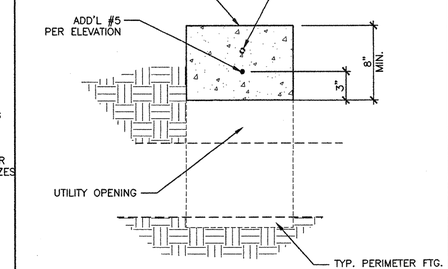

DETAIL

SCALE: 1 1/2"=1'-0" | 2

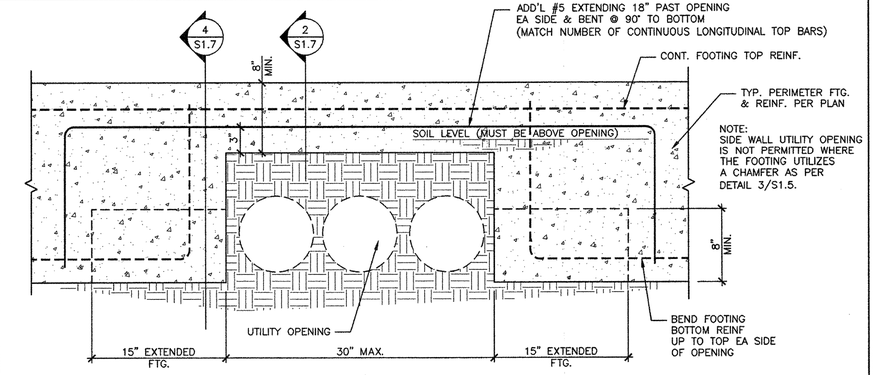

OPTIONAL UTILITY OPENINGS IN SIDE WALL FOOTINGS

SCALE: 1 1/2"=1'-0" | 3

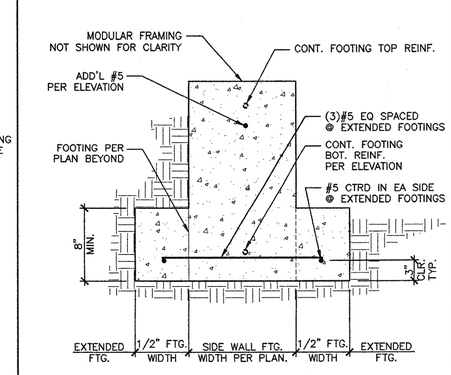

DETAIL

SCALE: 1 1/2"=1'-0" | 4

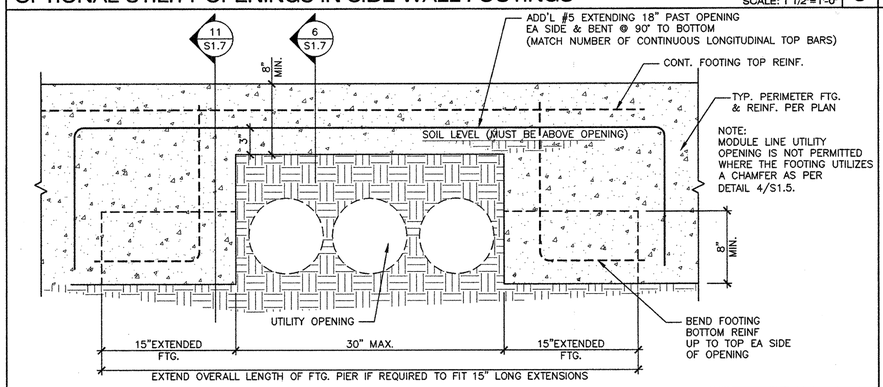

OPTIONAL UTILITY OPENINGS IN MODULE LINE FOOTINGS

SCALE: 1 1/2"=1'-0" | 5

DETAIL

SCALE: 1 1/2"=1'-0" | 6

NOT USED | 7

NOT USED | 8

NOT USED | 9

NOT USED | 10

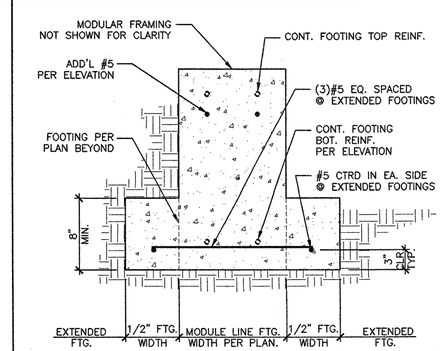

DETAIL

SCALE: 1 1/2"=1'-0" | 11

American Modular Systems
787 Spreckels Ave. Manteca, CA 95336
Phone (209) 825-1921 - Fax (209) 825-7018
americanmodular.com

MODULAR MANUFACTURER PROPRIETARY STATEMENT
THESE DRAWINGS AND THE MATERIAL CONTAINED THEREIN ARE THE PROPERTY OF AMERICAN MODULAR SYSTEMS, INC. (AMS) AND SHALL NOT BE REPRODUCED, COPIED OR OTHERWISE DISPOSED OF DIRECTLY OR INDIRECTLY AND SHALL NOT BE USED IN WHOLE OR IN PART TO ASSIST IN THE MAKING OF OR FOR THE PURPOSE OF FURNISHING ANY INFORMATION FOR THE MAKING OF DRAWINGS, PRINTS, APPARATUS OR PARTS THEREOF WITHOUT THE FULL KNOWLEDGE AND WRITTEN CONSENT OF AMS. ALL PATENTABLE MATERIAL CONTAINED HEREIN AND ORIGINATING WITH AMS SHALL BE THE SOLE PROPERTY OF AMS.

PRE-CHECKED SET NAME

24' x 40' THRU 120' x 40' BUILDINGS

SITE SPECIFIC PROJECT NAME

SHEET TITLE

CONCRETE FOUNDATION OPTIONAL UTILITY OPENINGS IN FOOTINGS

MANUFACTURER PROFESSIONAL OF RECORD ON PC

LICENSED ARCHITECT RANDOLF PATRICK CAVANAGH No. C12631 Ren. 08-31-17 STATE OF CALIFORNIA

REGISTERED PROFESSIONAL ENGINEER Mark D. Fronek No. S3380 Exp.03/31/16 STRUCTURAL STATE OF CALIFORNIA

05/19/2015

PROJECT SPECIFIC STATE AGENCY APPROVAL

IDENTIFICATION STAMP DIV. OF THE STATE ARCHITECT 02 116495 AC — FLS — SS DATE 12-18-2017

ORIGINAL PC STATE AGENCY APPROVAL

IDENTIFICATION STAMP DIV. OF THE STATE ARCHITECT CA. DEPT. OF GENERAL SERVICES PC 02-113876 AC FLS SS DATE 6/22/15

PRE-CHECK (PC) DOCUMENT - CODE: 2013 CBC
A SEPARATE PROJECT APPLICATION FOR CONSTRUCTION IS REQUIRED

REVISIONS

1	
2	
3	
4	

DRAWN BY:

SCALE: AS NOTED

DATE:

SHEET NUMBER

S1.7

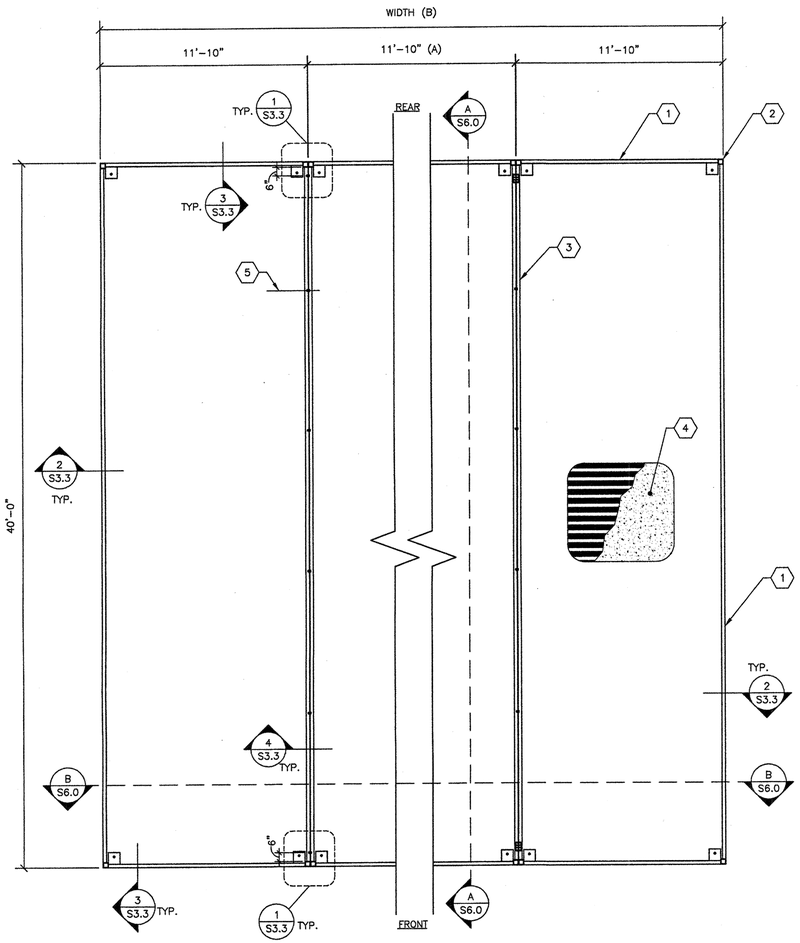

FLOOR FRAMING PLAN (CONCRETE FLOOR w/ 3W DECK OPTION) SCALE : 1/4"=1'-0" | A

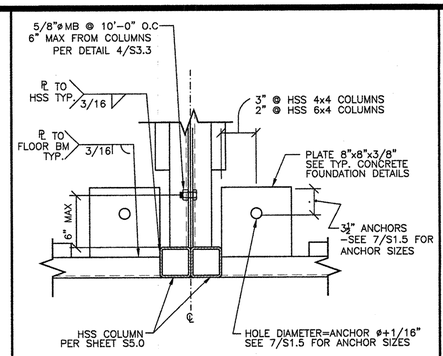

TYP. FLOOR BEAMS CONNECTION SCALE : 1 1/2"=1'-0" | 1

1. FLOOR BEAM PER SHEET S5.0. USE SINGLE SIZE CHANNEL THROUGHOUT FLOOR SYSTEM.
2. HSS COLUMN PER SHEET S5.0
3. L4"x3"x5/16" LLH
4. 2" LT WEIGHT CONCRETE FILL w/ 6x6/W1.4xW1.4 WWF w/ 1'-0" LAP OVER ASC 18 GA. 3W OR 3WH GALVANIZED DECK (5" MAX. TOTAL THICKNESS). DECK SIDE LAP ATTACHMENT TO BE BUTTON PUNCHED @ 36" O.C.

   NOTE: SEE ICC ER-2408 FOR ASC BRAND STEEL DECKING
5. 5/8"ø MB @ 10'-0" O.C., 6" MAX FROM COLUMNS

KEY NOTES

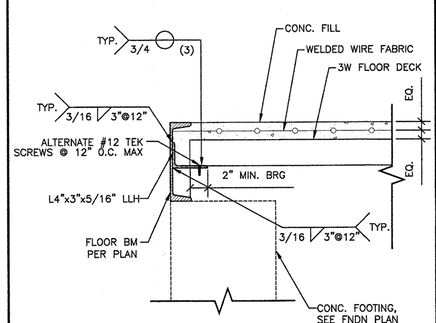

TYP. PERIMETER CONNECTION SCALE : 1 1/2"=1'-0" | 2

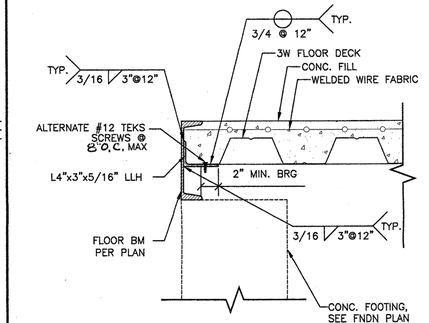

TYP. PERIMETER CONNECTION SCALE : 1 1/2"=1'-0" | 3

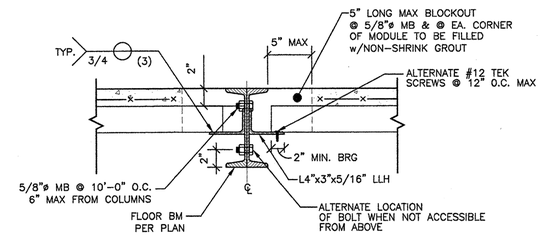

THE LONGITUDINAL FLOOR CHANNEL CONNECTIONS ARE NOMINAL AND ARE NOT REQUIRED STRUCTURALLY AT BUILDINGS ON CONCRETE FOUNDATIONS.

NOTE: REFER TO 2/S3.3 FOR WELDING OF LLH 4x3x5/16" TO FLOOR BEAM

TYP. MODULE LINE CONNECTION SCALE : 1 1/2"=1'-0" | 4

BLDG SIZE (FT)	TOTAL # OF 12' WIDE MODULES	"A" TOTAL # OF CENTER MODULES	"B" TOTAL BLDG WIDTH
☒ 24' x 40'	2	0	23'-8 1/4"
☐ 36' x 40'	3	1	35'-6 1/2"
☐ 48' x 40'	4	2	47'-4 3/4"
☐ 60' x 40'	5	3	59'-3"
☐ 72' x 40'	6	4	71'-1 1/4"
☐ 84' x 40'	7	5	82'-11 1/2"
☐ 96' x 40'	8	6	94'-9 3/4"
☐ 108' x 40'	9	7	106'-8"
☐ 120' x 40'	10	8	118'-6 1/4"

MODULE SCHEDULE

PLAN DESIGNATION	DECK TYPE	S_{gbot} IN³/FT	I_g IN⁴/FT	ALLOW DIAPHRAGM SHEAR *
	3"-18 GA ASC 3W GALV DECK (36" WIDE)	0.771	1.20	1320 PLF w/ 2" LWC TOPPING (5" TOTAL SLAB THICKNESS)

DECK PROFILE

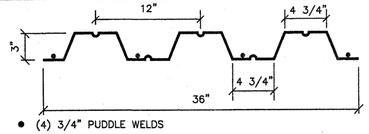

• (4) 3/4" PUDDLE WELDS

SIDE LAP ATTACHMENT TO BE BOTTON PUNCHED @ 36" O.C.
*NOTE: ASC STEEL DECKING: ICC ESR #2408

3W METAL DECK PROPERTIES AND PROFILE

PLAN DESIGNATION	DECK TYPE	S_{gbot} IN³/FT	I_g IN⁴/FT	ALLOW DIAPHRAGM SHEAR *
	3"-18 GA ASC 3WH GALV DECK (36" WIDE)	0.761	1.113	1091 PLF w/ 2" LWC TOPPING (5" TOTAL SLAB THICKNESS)

DECK PROFILE

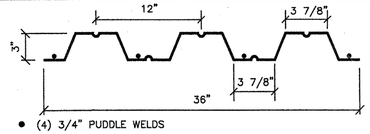

• (4) 3/4" PUDDLE WELDS

SIDE LAP ATTACHMENT TO BE BOTTON PUNCHED @ 36" O.C.
*NOTE: ASC STEEL DECKING: UES ER #0329

3WH METAL DECK PROPERTIES AND PROFILE

American Modular Systems
787 Spreckels Ave. Manteca, CA 95336
Phone (209) 825-1921 - Fax (209) 825-7018
americanmodular.com

MODULAR MANUFACTURER PROPRIETARY STATEMENT

THESE DRAWINGS AND THE MATERIAL CONTAINED THEREIN ARE THE PROPERTY OF AMERICAN MODULAR SYSTEMS, INC. (AMS) AND SHALL NOT BE REPRODUCED, COPIED OR OTHERWISE DISPOSED OF DIRECTLY OR INDIRECTLY AND SHALL NOT BE USED IN WHOLE OR IN PART TO ASSIST IN THE MAKING OF OR FOR THE PURPOSE OF FURNISHING ANY INFORMATION FOR THE MAKING OF DRAWINGS, PRINTS, APPARATUS OR PARTS THEREOF WITHOUT THE FULL KNOWLEDGE AND WRITTEN CONSENT OF AMS. ALL PATENTABLE MATERIAL CONTAINED HEREIN AND ORIGINATING WITH AMS SHALL BE THE SOLE PROPERTY OF AMS.

PRE-CHECKED SET NAME

24' x 40' THRU 120' x 40' BUILDINGS

SITE SPECIFIC PROJECT NAME

SHEET TITLE

FLOOR FRAMING PLAN & DETAILS CONCRETE FLOOR w/ 3W DECK OPTION

MANUFACTURER PROFESSIONAL OF RECORD ON PC

LICENSED ARCHITECT — DANIEL PATRICK GUINAGH — No. C12631 Ren. 03-31-17 — STATE OF CALIFORNIA

REGISTERED PROFESSIONAL ENGINEER — MARK D. FRANZ — No. S3390 Exp03/31/16 — STRUCTURAL — STATE OF CALIFORNIA

05/19/2015

PROJECT SPECIFIC STATE AGENCY APPROVAL

IDENTIFICATION STAMP DIV. OF THE STATE ARCHITECT
02 116495
AC — FLS — SS 101
DATE 12-18-2017

ORIGINAL PC STATE AGENCY APPROVAL

IDENTIFICATION STAMP DIV. OF THE STATE ARCHITECT CA. DEPT. OF GENERAL SERVICES
PC 02-113876
AC ____ FLS ____ SS
DATE 6/22/10

PRE-CHECK (PC) DOCUMENT - CODE: 2013 CBC
A SEPARATE PROJECT APPLICATION FOR CONSTRUCTION IS REQUIRED

REVISIONS

1.
2.
3.
4.

DRAWN BY:

SCALE: AS NOTED

DATE:

SHEET NUMBER

S3.3

24-1.DWG - 24" x 40" - 100' x 40' CROSSED EXCEL - SAVED: 6/7/2016 1:12 PM - PLOTTED: 6/7/2016

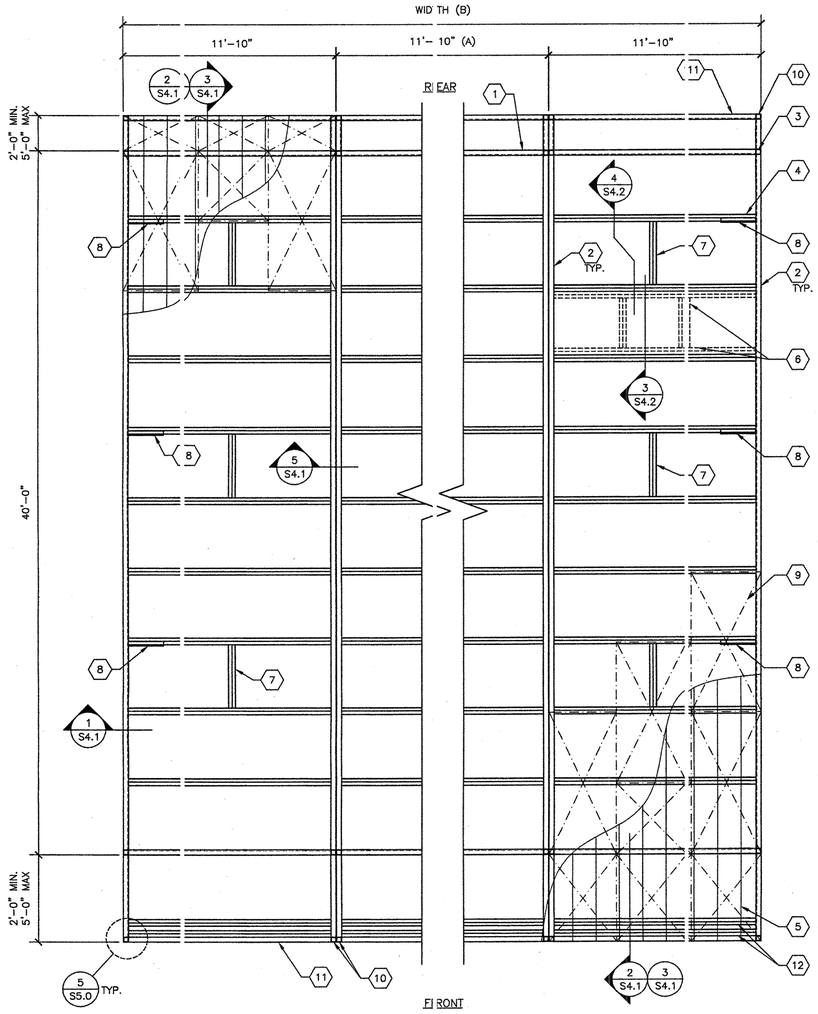

TYPICAL ROOF FRAMING LAYOUT (ENCLOSED SOFFIT)

SCALE: 1/4"=1'-0" | A

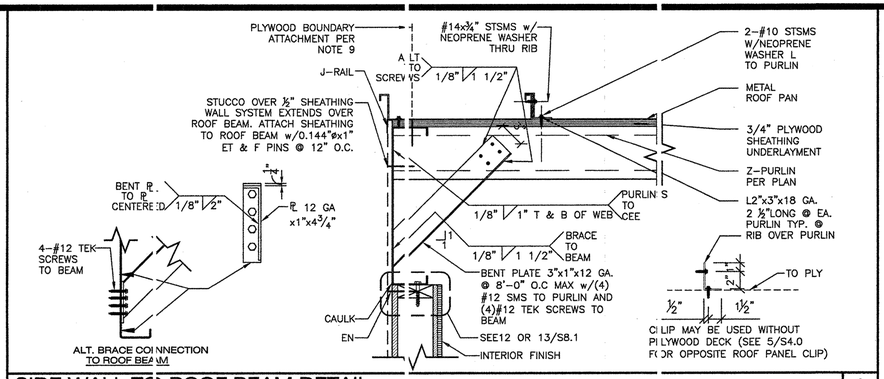

SIDE WALL TO ROOF BEAM DETAIL

SCALE: 1 1/2"=1'-0" | 1

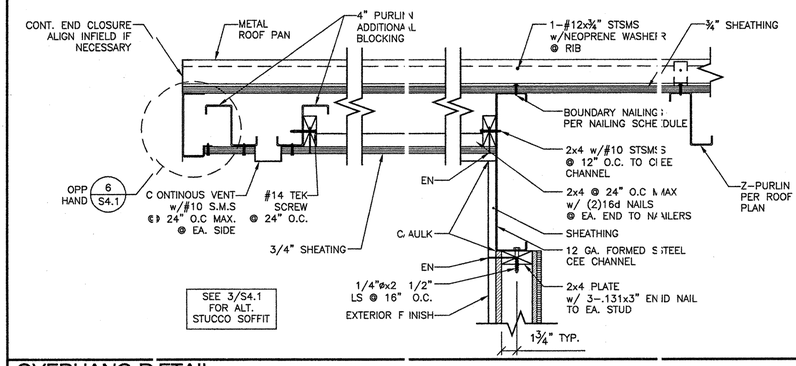

OVERHANG DETAIL

SCALE: 1 1/2"=1'-0" | 2

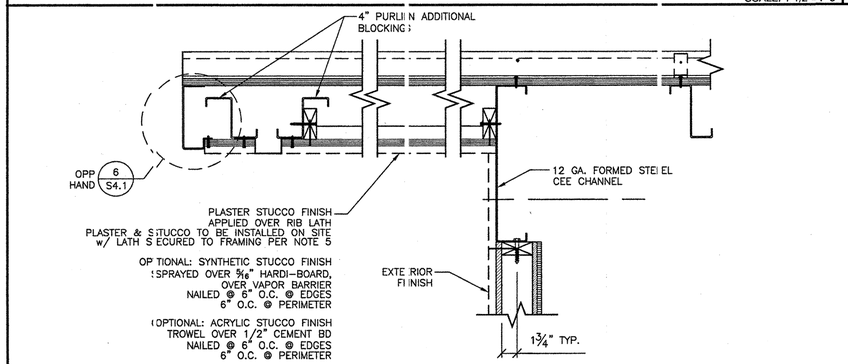

FOR ALL ITEMS NOT SHOWN OR NOTED SEE 2/S4.1

ALTERNATE OVERHANG DETAIL w/ STUCCO SOFFIT

SCALE: 1 1/2"=1'-0" | 3

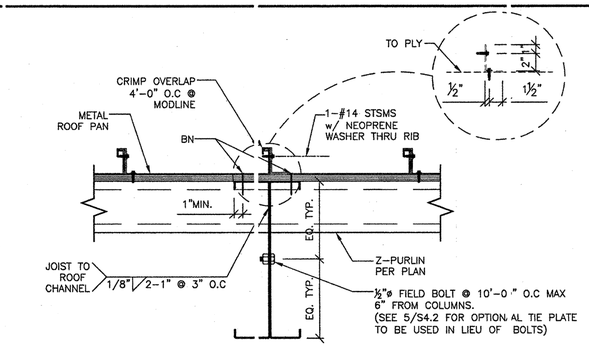

ROOF BEAM CONNECTION DETAIL

SCALE: 1 1/2"=1'-0" | 5

KEY NOTES

1. THE MATERIAL THICKNESS OF LIGHT GAUGE STRUCTURAL MEMBERS, IN THEIR END-USE, SHALL MEET OR EXCEED THE MINIMUM BASE METAL THICKNESS SPECIFIED ON SHEET S0.0. THE MATERIAL GAGE DESIGNATION IN THE PLAN SHALL BE USED AS REFERENCE ONLY.
2. SEE SHEET S8.0 & S9.0 FOR TYP. SIDE WALL FRAMING.
3. SEE SHEET S8.0 & S9.0 FOR TYP. END WALL FRAMING.
4. ALL FASTENERS THRU METAL ROOF PANEL SHALL BE INSTALLED w/NEOPRENE WASHERS.
5. FOR PLASTER STUCCO FINISH @ SOFFIT, LATH SHALL BE SECURED PER THE FOLLOWING (CBC 2507.3): SECURE LATH TO ALTERNATE SUPPORTS WITH TIES CONSISTING OF A DOUBLE STRAND OF NO. 18 W & M GAGE GALVANIZED ANNEALED WIRE AT ONE EDGE OF EACH SHEET OF LATH. WIRE TIES SHALL BE INSTALLED NOT LESS THAN 3 INCHES (76MM) BACK FROM THE EDGE OF EACH SHEET AND SHALL BE LOOPED AROUND STRIPPING, OR ATTACHED TO A #8 SMS SCREW INTO EACH SIDE OF THE PURLIN – 2 INCHES (51MM) ABOVE THE BOTTOM OF THE PURLIN OR TO EACH END OF A #12 SMS DRIVEN HORIZONTALLY THROUGH THE PURLIN – 2 INCHES (51MM) ABOVE THE BOTTOM OF THE PURLIN AND THE ENDS OF THE WIRE SECURED TOGETHER WITH THREE TWISTS OF WIRE.

1. TRANSVERSE ROOF BEAM PER SHEET S5.0.
2. LONGITUDINAL ROOF BEAM PER SHEET S5.0.
3. HSS PER SCHEDULE SHEET S5.0.
4. ROOF PURLINS @ 48" O.C. SEE SHEET S0.0.
5. 16x3 0.34"x20 GA. ROOF PAN – SEE SHEET S0.0. (ALT. 26 GA. ROOF PAN)
6. PROVIDE DOUBLE 6" PURLINS W/6" PURLIN BLKG PER 3/S4.2 @ OPTIONAL 600# HVAC.
7. PURLIN BLOCKING WELD TO ROOF PURLINS PER DETAIL 3/S4.2. BLOCKING IS ONLY REQUIRED AT THE OUTSIDE MODULES @ PURLINS WITH BENT PLATE PER 8 BELOW
8. 3"x1"x12 GA. BENT PLATE PER 1/S4.1 LOCATE AT PURLINS W/BLOCKING PER NOTE 7 ABOVE (IF CROSS BRACING IS USED THEN REFER TO SHEET S4.0)
9. 3/4" APA RATED L-P OSB SHEATHING OR 3/4" PLYWOOD (ALL SHEATHING SHALL BE EITHER T&G OR EDGE CLIP) CONFORMING TO PS-109, CD EXPOSURE-1 48/24 SPAN INDEX, FACE GRAIN NORMAL TO ROOF PURLINS ROOF. SHTHG MAY BE REPLACED BY STRAP CROSS BRACING PER SHEET S4.0. ALL BOUNDARY,EDGE& FIELD ATTACHMENTS SHALL BE 1"FROM EDGE OF PLYWOOD & EDGE OF STEEL SUPPORTING MEMBER. REFER TO FASTENING SCHEDULE.
10. 2½" SQ. HSS SOFFIT COLUMN – SEE 5/S5.0.
11. 14 GA. FORMED STEEL SOFFIT CEE – SEE S0.0
12. ADDITIONAL BLOCKING FOR SOFFIT VENT

GENERAL NOTES

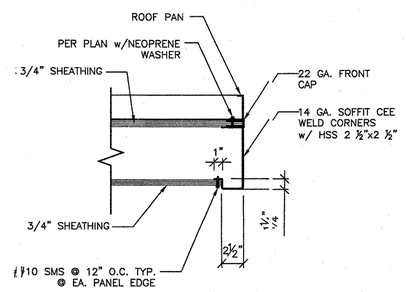

BLDG SIZE (FT)	TOTAL # OF 12' WIDE MODULES	"A" TOTAL # OF CENTER MODULES	"B" TOTAL BLDG WIDTH
☒ 24' x 40'	2	0	23'-8 1/4"
☐ 36' x 40'	3	1	35'-6 1/2"
☐ 48' x 40'	4	2	47'-4 3/4"
☐ 60' x 40'	5	3	59'-3"
☐ 72' x 40'	6	4	71'-1 1/4"
☐ 84' x 40'	7	5	82'-11 1/2"
☐ 96' x 40'	8	6	94'-9 3/4"
☐ 108' x 40'	9	7	106'-8"
☐ 120' x 40'	10	8	118'-6 1/4"

MODULE SCHEDULE

SHEATHING FASTENING				
NAILING	0.144 PINS SPACING		# 10 SMS SPACING	
	TYPICAL	WITHIN 4' OF BUILDING CORNERS	TYPICAL	WITHIN 4' OF BUILDING CORNERS
BOUNDARY	6" O.C.	6" O.C.	6" O.C.	6" O.C.
EDGE	6" O.C.	6" O.C.	6" O.C.	6" O.C.
FIELD	6" O.C	6" O.C	12" O.C	12" O.C

ET&F 0.144 PINS PER PRELIMINARY ANALYSIS REPORT DATED 10/6/14. IAPMO REPORT PENDING.

FASTENING SPACING SCHEDULE

ENCLOSED SOFFIT DETAIL

SCALE: N.T.S | 6

AMS
American Modular Systems
787 Spreckels Ave. Manteca, CA 95336
Phone (209) 825-1921 - Fax (209) 825-7018
americanmodular.com

MODULAR MANUFACTURER PROPRIETARY STATEMENT

THESE DRAWINGS AND THE MATERIAL CONTAINED THEREIN ARE THE PROPERTY OF AMERICAN MODULAR SYSTEMS, INC. (AMS) AND SHALL NOT BE REPRODUCED, COPIED OR OTHERWISE DISPOSED OF DIRECTLY OR INDIRECTLY AND SHALL NOT BE USED IN WHOLE OR IN PART TO ASSIST IN THE MAKING OF OR FOR THE PURPOSE OF FURNISHING ANY INFORMATION FOR THE MAKING OF DRAWINGS, PRINTS, APPARATUS OR PARTS THEREOF WITHOUT THE FULL KNOWLEDGE AND WRITTEN CONSENT OF AMS. ALL PATENTABLE MATERIAL CONTAINED HEREIN AND ORIGINATING WITH AMS SHALL BE THE SOLE PROPERTY OF AMS.

PRE-CHECKED SET NAME

24' x 40' THRU 120' x 40' BUILDINGS

SITE SPECIFIC PROJECT NAME

SHEET TITLE

ROOF FRAMING PLAN & DETAILS ENCLOSED SOFFIT OPTION

MANUFACTURER PROFESSIONAL OF RECORD ON PC

LICENSED ARCHITECT PATRICK CAVANAGH No. C12631 Ren. 03-31-17 STATE OF CALIFORNIA

REGISTERED PROFESSIONAL ENGINEER D. FONG No. S3380 Exp.03/31/16 STRUCTURAL STATE OF CALIFORNIA

05/19/2015

PROJECT SPECIFIC STATE AGENCY APPROVAL

IDENTIFICATION STAMP DIV. OF THE STATE ARCHITECT 02 116495 AC FLS SS DATE 12-18-2017

ORIGINAL PC STATE AGENCY APPROVAL

IDENTIFICATION STAMP DIV. OF THE STATE ARCHITECT CA. DEPT. OF GENERAL SERVICES PC 02-113876 AC FLS SS DATE 6/22/15

PRE-CHECK (PC) DOCUMENT – CODE: 2013 CBC A SEPARATE PROJECT APPLICATION FOR CONSTRUCTION IS REQUIRED

REVISIONS

1	
2	
3	
4	

DRAWN BY:

SCALE: AS NOTED

DATE:

SHEET NUMBER

S4.1

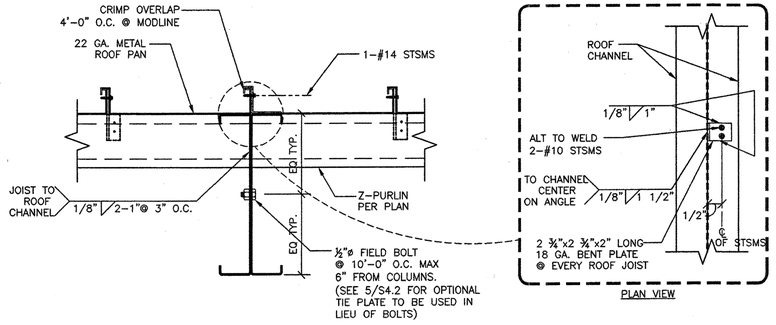

ROOF BEAM CONNECTION DETAIL — SCALE: 1 1/2"=1'-0" — 1

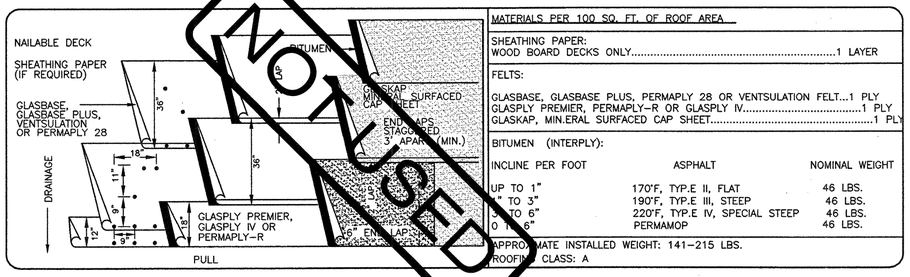

NOT USED

THREE PLY MINERAL BUILT-UP ROOF — SCALE: 1 1/2"=1'-0" — 2

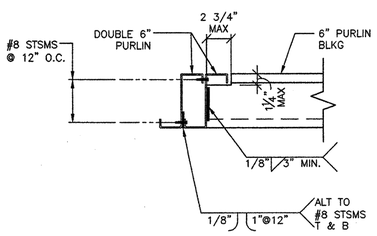

BLOCKING DETAIL — SCALE: 1 1/2"=1'-0" — 3

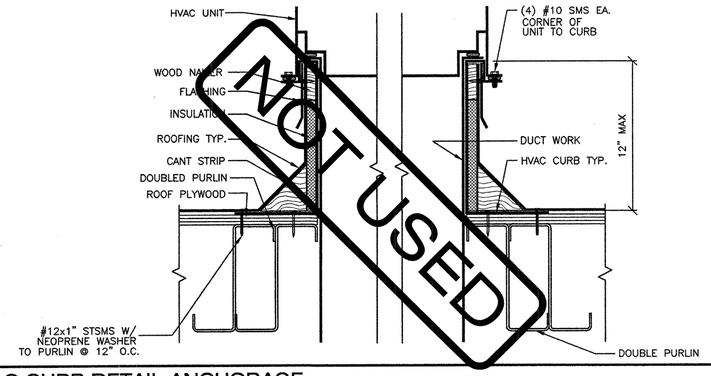

NOT USED

HVAC CURB DETAIL ANCHORAGE — SCALE: 1 1/2"=1'-0" — 4

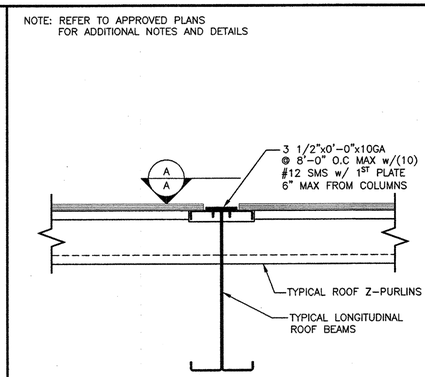

OPTIONAL ROOF TIE PLATE — SCALE: 1 1/2"=1'-0" — 5

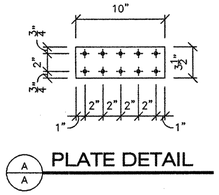

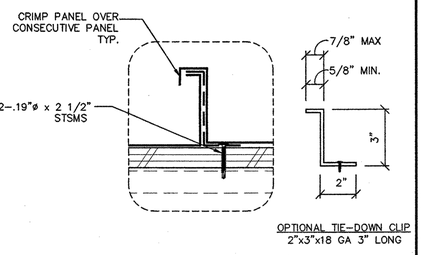

NOTE:
MECHANICALLY CRIMP EACH STANDING SEAM ENTIRELY.
MECHANICALLY CRIMP PANELS OVER ALL CLIPS.

ROOF DETAIL (OPTIONAL ROOF PAN CLIP) — 7

NOT USED — 8

NOT USED — 9

NOT USED — 10

NOT USED — 11

NOT USED — 12

NOT USED — 13

NOT USED — 14

NOT USED — 15

1. THE MATERIAL THICKNESS OF LIGHT GAUGE STRUCTURAL MEMBERS, IN THEIR END-USE, SHALL MEET OR EXCEED THE MINIMUM BASE METAL THICKNESS SPECIFIED ON SHEET S0.0 THE MATERIAL GAGE DESIGNATION IN THE PLAN SHALL BE USED AS REFERENCE ONLY.

GENERAL NOTES

AMS®
American Modular Systems
787 Sprockels Ave. Manteca, CA 95336
Phone (209) 825-1921 - Fax (209) 825-7018
americanmodular.com

MODULAR MANUFACTURER PROPRIETARY STATEMENT
THESE DRAWINGS AND THE MATERIAL CONTAINED THEREIN ARE THE PROPERTY OF AMERICAN MODULAR SYSTEMS, INC. (AMS) AND SHALL NOT BE REPRODUCED, COPIED OR OTHERWISE DISPOSED OF DIRECTLY OR INDIRECTLY AND SHALL NOT BE USED IN WHOLE OR IN PART TO ASSIST IN THE MAKING OF OR FOR THE PURPOSE OF FURNISHING ANY INFORMATION FOR THE MAKING OF DRAWINGS, PRINTS, APPARATUS OR PARTS THEREOF WITHOUT THE FULL KNOWLEDGE AND WRITTEN CONSENT OF AMS. ALL PATENTABLE MATERIAL CONTAINED HEREIN AND ORIGINATING WITH AMS SHALL BE THE SOLE PROPERTY OF AMS.

PRE-CHECKED SET NAME

24' x 40' THRU 120' x 40' BUILDINGS

SITE SPECIFIC PROJECT NAME

SHEET TITLE

ROOF FRAMING DETAILS

MANUFACTURER PROFESSIONAL OF RECORD ON PC

LICENSED ARCHITECT — RANDALL PATRICK CANNON — No. C12631 Ren. 03-31-17 — STATE OF CALIFORNIA

REGISTERED PROFESSIONAL ENGINEER — MARK D. FRASER — No. S3380 Exp.03/31/16 — STRUCTURAL — STATE OF CALIFORNIA

05/19/2015

PROJECT SPECIFIC STATE AGENCY APPROVAL

IDENTIFICATION STAMP
DIV. OF THE STATE ARCHITECT
02 116495
AC FLS SS
DATE 12-18-2017

ORIGINAL PC STATE AGENCY APPROVAL

IDENTIFICATION STAMP
DIV. OF THE STATE ARCHITECT
CA. DEPT. OF GENERAL SERVICES
PC 02-113876
AC FLS SS
DATE 6/22/15

PRE-CHECK (PC) DOCUMENT - CODE: 2013 CBC
A SEPARATE PROJECT APPLICATION FOR CONSTRUCTION IS REQUIRED

REVISIONS
1
2
3
4

DRAWN BY:
SCALE: AS NOTED
DATE:

SHEET NUMBER

S4.2

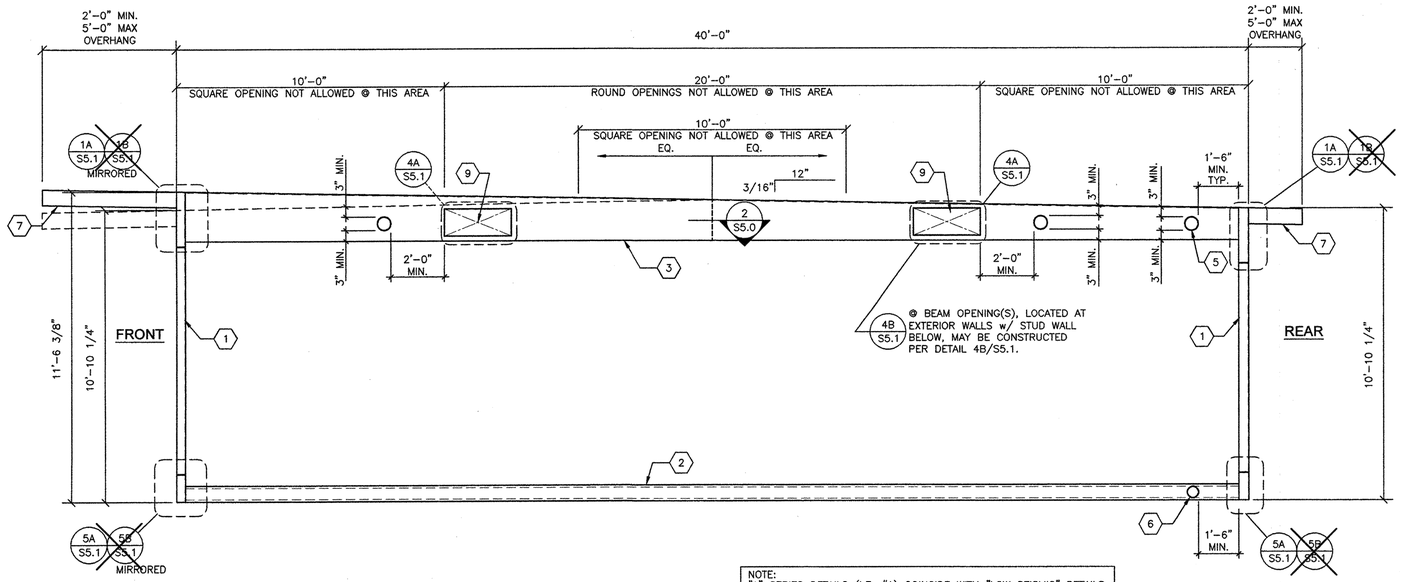

NOTE:
"A" SERIES DETAILS (I.E. #A) COINCIDE WITH "LOW SEISMIC" DETAILS.
"B" SERIES DETAILS COINCIDE WITH "HIGH SEISMIC" DETAILS.

TYPICAL LONGITUDINAL FRAME ELEVATION

SCALE: 3/8"=1'-0" | 1

1. HSS COLUMN – SEE SCHEDULES BELOW
2. FLOOR BEAM – SEE SCHEDULES BELOW
3. LONGITUDINAL ROOF BEAM – SEE SCHEDULES BELOW
   14"–18"–14" @ DOUBLE SLOPE TYPE
   14"–22" @ SINGLE SLOPE TYPE
4. TRANSVERSE ROOF BEAM – SEE SCHEDULES BELOW
   14" MIN. 22" MAX
5. 6" ø MAX OPENING IN WEB OF ROOF BEAM WITHOUT WEB REINFORCEMENT MINIMUM SPACING OF HOLES @ 48" O.C. HOLES MAY OCCUR @ ANY LOCATION ALONG LENGTH OF ROOF BEAM EXCEPT AS NOTED OTHERWISE ON FRAMING ELEVATION. – SEE 6/S5.1
   NOTE: IF HOLE IS 3" OR LESS THEY MAY BE SPACED @ 24" O.C. MINIMUM
6. 4" ø MAX OPENING IN WEB OF FLOOR BEAM WITHOUT WEB REINFORCEMENT MINIMUM SPACING OF HOLES @ 48" O.C. HOLES MAY OCCUR @ ANY LOCATION ALONG LENGTH OF FLOOR BEAM WITH DIRECT FOUNDATION SUPPORT BELLOW. OPENINGS ARE NOT ALLOWED WHERE BEAMS ARE SPANNING BETWEEN FOUNDATIONS OR ACROSS VENT OPENINGS. – SEE 6/S5.1
   NOTE: IF HOLE IS 2" OR LESS THEY MAY BE SPACED @ 24" MINIMUM
7. 14 GA OUTRIGGER CHANNEL AT OPTIONAL ENCLOSED OVERHANG
   REFER TO DETAIL 1A OR 1B/S5.1 & S5.0 FOR PROPERTIES
8. NOT USED
9. LONGITUDINAL BEAM OPENING:
   REFER TO DETAIL ~~4A~~/S5.1 FOR OPENING REINFORCEMENT
   (10"x18" MAX OPENING SIZE)
10. TRANSVERSE BEAM OPENING:
    REFER TO DETAIL ~~4B~~/S5.1 FOR OPENING REINFORCEMENT
    (10"x30" MAX OPENING SIZE)

KEY NOTES

American Modular Systems
787 Spreckels Ave. Manteca, CA 95336
Phone (209) 825-1921 - Fax (209) 825-7018
americanmodular.com

MODULAR MANUFACTURER PROPRIETARY STATEMENT

THESE DRAWINGS AND THE MATERIAL CONTAINED THEREIN ARE THE PROPERTY OF AMERICAN MODULAR SYSTEMS, INC. (AMS) AND SHALL NOT BE REPRODUCED, COPIED OR OTHERWISE DISPOSED OF DIRECTLY OR INDIRECTLY AND SHALL NOT BE USED IN WHOLE OR IN PART TO ASSIST IN THE MAKING OF OR FOR THE PURPOSE OF FURNISHING ANY INFORMATION FOR THE MAKING OF DRAWINGS, PRINTS, APPARATUS OR PARTS THEREOF WITHOUT THE FULL KNOWLEDGE AND WRITTEN CONSENT OF AMS. ALL PATENTABLE MATERIAL CONTAINED HEREIN AND ORIGINATING WITH AMS SHALL BE THE SOLE PROPERTY OF AMS.

PRE-CHECKED SET NAME

24' x 40' THRU 120' x 40' BUILDINGS

SITE SPECIFIC PROJECT NAME

SHEET TITLE

MOMENT FRAME ELEVATIONS & DETAILS

MANUFACTURER PROFESSIONAL OF RECORD ON PC

LICENSED ARCHITECT RANDOLF PATRICK CAVANAGH No. C12631 Ren. 08-31-17 STATE OF CALIFORNIA

REGISTERED PROFESSIONAL ENGINEER MARK D. FRANCHI No. 53390 Exp.03/31/16 STRUCTURAL STATE OF CALIFORNIA

05/19/2015

PROJECT SPECIFIC STATE AGENCY APPROVAL

IDENTIFICATION STAMP DIV. OF THE STATE ARCHITECT
02 116495
AC – FLS – SS
DATE 12-18-2017

ORIGINAL PC STATE AGENCY APPROVAL

IDENTIFICATION STAMP DIV. OF THE STATE ARCHITECT CA. DEPT. OF GENERAL SERVICES
PC 02-113876
AC___ FLS___ SS
DATE 6/22/15

PRE-CHECK (PC) DOCUMENT – CODE: 2013 CBC
A SEPARATE PROJECT APPLICATION FOR CONSTRUCTION IS REQUIRED

REVISIONS

1	
2	
3	
4	

DRAWN BY:
SCALE: AS NOTED
DATE:

SHEET NUMBER

S5.0

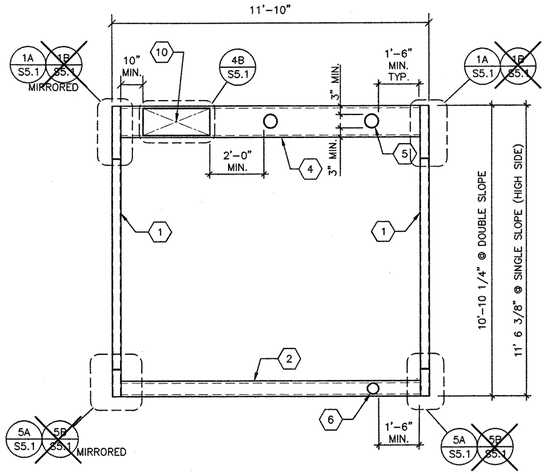

NOTE:
"A" SERIES DETAILS (I.E. #A) COINCIDE WITH "LOW SEISMIC" DETAILS.
"B" SERIES DETAILS COINCIDE WITH "HIGH SEISMIC" DETAILS.

TYPICAL TRANSVERSE FRAME ELEVATION

SCALE : 3/8"=1'-0" | 4

THE WELDING PROCEDURE QUALIFICATION TEST RECORD AND WELDING PROCEDURE SPECIFICATION FOR THIS WELD SHALL BE PREPARED IN ACCORDANCE WITH AWS D.1–10 AND SUBMITTED TO THE STRUCTURAL ENGINEER FOR REVIEW AND SUBMITTAL TO THE D.S.A. TYPICAL ALL DETAILS THIS SHEET. ALL WELDS USED IN PRIMARY MEMBERS AND CONNECTIONS IN THE LATERAL FORCE–RESISTING SYSTEMS SHALL BE MADE WITH FILLER METAL THAT HAS A MINIMUM CHARPY V–NOTCH TOUGHNESS OF 20 FT.–LBS AT ZERO DEGREES F, AS DETERMINED BY AWS CLASSIFICATION.

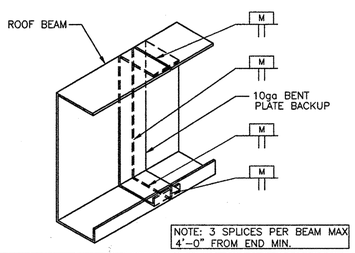

NOTE: 3 SPLICES PER BEAM MAX 4'–0" FROM END MIN.

TYPICAL BEAM SLICE

SCALE: 1 1/2"=1'-0" | 2

FLOOR BEAMS		ALT. FLOOR BEAMS		COLUMNS	LONGITUDINAL ROOF CHANNEL	TRANSVERSE ROOF CHANNEL
~~PLYWOOD FLOOR~~	STRUCTO–CRETE OR CONCRETE FLOOR	~~PLYWOOD FLOOR~~	SC OR CONC FLOOR			
~~C7x9.8~~	C9x13.4 (36 KSI)	~~C9x13.4 (36 KSI) OPTION: C10x15.3~~	C10x15.3	HSS 4x4x5/16	10GA	12GA

NOTE:
SEE ALL SECTION PROPERTIES ON SHEET S0.0

☒ FRAME MEMBER SCHEDULE - (LOW SEISMIC)

3A

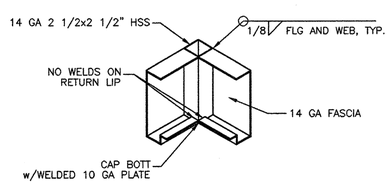

OVERHANG CORNER DETAIL

SCALE: 1 1/2"=1'-0" | 5

FLOOR BEAMS		ALT. FLOOR BEAMS		COLUMNS	LONGITUDINAL ROOF CHANNEL	TRANSVERSE ROOF CHANNEL
PLYWOOD FLOOR	STRUCTO–CRETE OR CONCRETE FLOOR	~~PLYWOOD FLOOR~~	SC OR CONC FLOOR			
C9x13.4 (50 KSI)	C9x13.4 (50 KSI)	~~C10x15.3~~	C10x15.3	HSS 6x4x5/16 (SEE ORIENTATION BELOW)	10GA	10GA

NOTE:
SEE ALL SECTION PROPERTIES ON SHEET S0.0

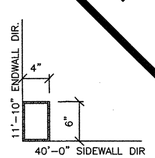

NOT USED

☐ FRAME MEMBER SCHEDULE - (HIGH SEISMIC)

3B

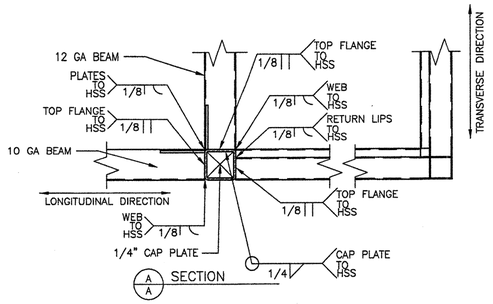

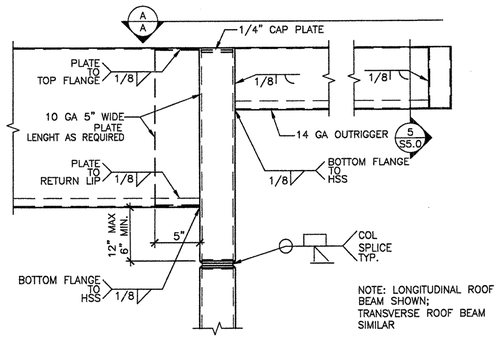

NOTE: LONGITUDINAL ROOF BEAM SHOWN; TRANSVERSE ROOF BEAM SIMILAR

☐ TYPICAL ROOF CHANNEL TO HSS DETAIL - (LOW SEISMIC)

SCALE: 1 1/2"=1'-0" 1A

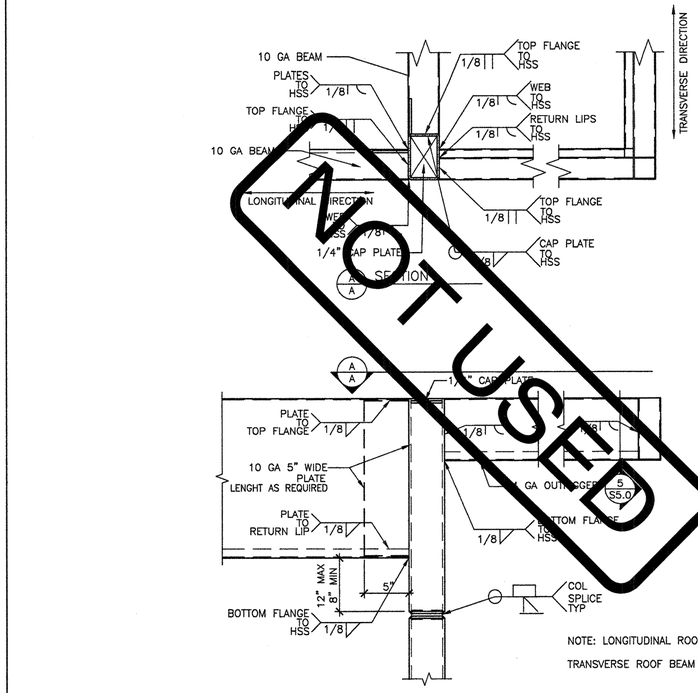

NOT USED

NOTE: LONGITUDINAL ROOF BEAM SHOWN; TRANSVERSE ROOF BEAM SIMILAR

☐ TYPICAL ROOF CHANNEL TO HSS DETAIL - (HIGH SEISMIC)

SCALE: 1 1/2"=1'-0" 1B

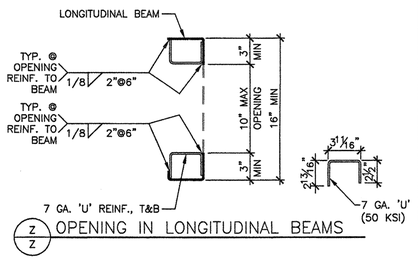

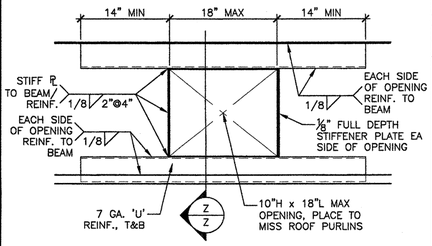

NOTES:

1. LOCATE DIAGONAL BRACE (SEE 1/S4.1) AT PURLINS CLOSEST TO EACH SIDE OF BEAM OPENING, TYP.
2. BEAM OPENING(S), LOCATED AT EXTERIOR WALLS w/ STUD WALL BELOW, MAY BE CONSTRUCTED PER DETAIL 4B/S5.1.

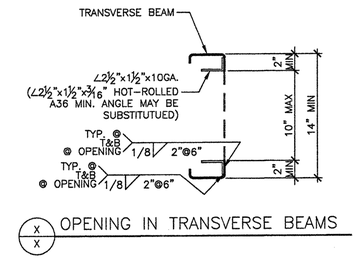

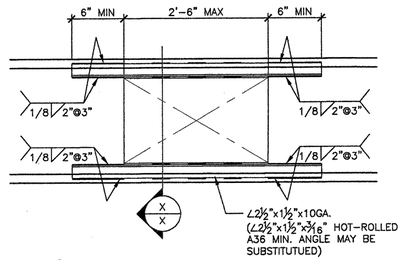

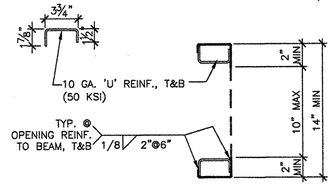

OPENING @ ROOF BEAMS LONGITUDINAL BEAMS

SCALE: 1 1/2"=1'-0" 4A

OPENING @ ROOF BEAMS TRANSVERSE BEAMS

SCALE: 1 1/2"=1'-0" 4B

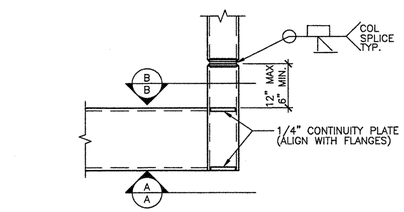

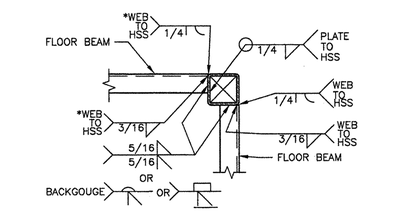

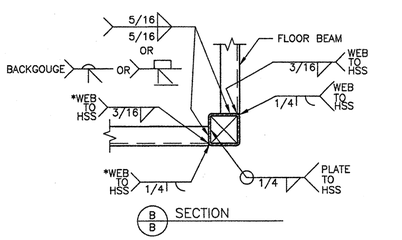

* FULL PEN WELD MAY BE USED AS AN ALTERNATIVE TO THE DOUBLE SIDED BEAM WEB-TO-COLUMN WELD SHOWN.

☐ TYPICAL CORNER TO FLOOR BEAM DETAIL (LOW SEISMIC)

SCALE: 1 1/2"=1'-0" 5A

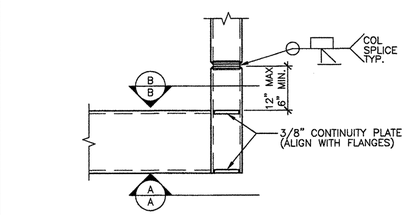

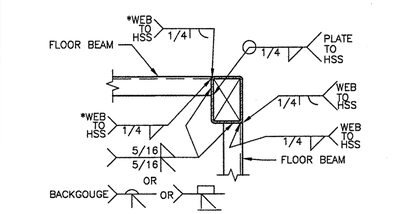

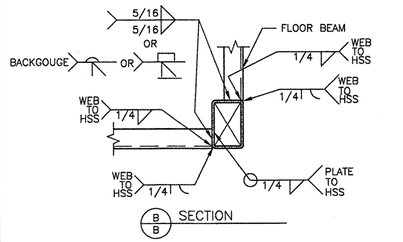

* FULL PEN WELD MAY BE USED AS AN ALTERNATIVE TO THE DOUBLE SIDED BEAM WEB-TO-COLUMN WELD SHOWN.

☐ TYPICAL CORNER TO FLOOR BEAM DETAIL (HIGH SEISMIC)

SCALE: 1 1/2"=1'-0" 5B

THE WELDING PROCEDURE QUALIFICATION TEST RECORD AND WELDING PROCEDURE SPECIFICATION FOR THIS WELD SHALL BE PREPARED IN ACCORDANCE WITH AWS D1-10 & AWS D1.3-08 SUBMITTED TO THE STRUCTURAL ENGINEER FOR REVIEW AND SUBMITTAL TO THE D.S.A. TYPICAL ALL DETAILS THIS SHEET. ALL WELDS USED IN PRIMARY MEMBERS AND CONNECTIONS IN THE LATERAL FORCE-RESISTING SYSTEMS SHALL BE MADE WITH FILLER METAL THAT HAS A MINIMUM CHARPY V-NOTCH TOUGHNESS OF 20 FT.-LBS AT ZERO DEGREES F, AS DETERMINED BY AWS CLASSIFICATION.

GENERAL NOTES

1. FILLER METALS SHALL CONFORM TO THE REQUIREMENTS OF THE AISC SEISMIC PROVISIONS.
2. WELDING PROCEDURES SHALL BE IN ACCORDANCE WITH THE AISC SEISMIC PROVISIONS.
3.
4.
5.
6.
7.
8.
9. QUALITY CONTROL AND QUALITY ASSURANCE SHALL BE IN ACCORDANCE WITH THE AISC SEISMIC PROVISIONS.
10. WELD ACCESS HOLES SHALL BE IN ACCORDANCE WITH AISC 360-10, SECTION J1.6, AND SHALL BE CONSTRUCTED PER THE FOLLOWING DETAILS & NOTES.

WELD ACCESS HOLE GEOMETRY

NOTES: THESE ARE TYPICAL DETAILS FOR JOINTS WELDED FROM ONE SIDE AGAINST STEEL BACKING WHERE WELD ACCESS HOLES ARE REQUIRED.

1) LENGTH: GREATER OF 1.5tw OR 1-1/2 IN. (38 MM)
2) HEIGHT: GREATER OF 1.0tw OR 3/4 IN. (19 MM) BUT NEED NOT EXCEED 2 IN. (50 MM)
3) R: 3/8 IN. MIN. (10 MM). GRIND THE THERMALLY CUT SURFACES OF WELD ACCESS HOLES IN HEAVY SHAPES AS DEFINED IN SECTIONS A3.1(c) AND OF AISC 360-10
4) SLOPE 'a' FORMS A TRANSITION FROM THE WEB TO THE FLANGE. SLOPE 'b' MAY BE HORIZONTAL.
5) THE BOTTOM OF THE TOP FLANGE IS TO BE CONTOURED TO PERMIT THE TIGHT FIT OF BACKING BARS WHERE THEY ARE TO BE USED.

REQ. FOR FR MOMENT CONNECTIONS

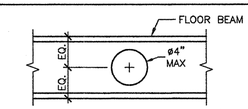

4" OPENING IN FLOOR BEAM

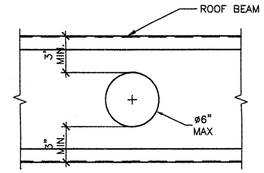

6" OPENING IN ROOF BEAM

OPENING IN BEAMS

SCALE: 1 1/2"=1'-0" 6

American Modular Systems
787 Spreckels Ave. Manteca, CA 95336
Phone (209) 825-1921 - Fax (209) 825-7018
americanmodular.com

MODULAR MANUFACTURER PROPRIETARY STATEMENT

THESE DRAWINGS AND THE MATERIAL CONTAINED THEREIN ARE THE PROPERTY OF AMERICAN MODULAR SYSTEMS, INC. (AMS) AND SHALL NOT BE REPRODUCED, COPIED OR OTHERWISE DISPOSED OF DIRECTLY OR INDIRECTLY AND SHALL NOT BE USED IN WHOLE OR IN PART TO ASSIST IN THE MAKING OF OR FOR THE PURPOSE OF FURNISHING ANY INFORMATION FOR THE MAKING OF DRAWINGS, PRINTS, APPARATUS OR PARTS THEREOF WITHOUT THE FULL KNOWLEDGE AND WRITTEN CONSENT OF AMS. ALL PATENTABLE MATERIAL CONTAINED HEREIN AND ORIGINATING WITH AMS SHALL BE THE SOLE PROPERTY OF AMS.

PRE-CHECKED SET NAME

24' x 40' THRU 120' x 40' BUILDINGS

SITE SPECIFIC PROJECT NAME

SHEET TITLE

MOMENT FRAME CONNECTION DETAILS

MANUFACTURER PROFESSIONAL OF RECORD ON PC

LICENSED ARCHITECT GREGORY PATRICK CUNNINGHAM No. C12631 Rem. 09-31-17 STATE OF CALIFORNIA

IDENTIFICATION STAMP DIV. OF THE STATE ARCHITECT 02 116495 AC - FLS - SS DATE 12-18-2015

REGISTERED PROFESSIONAL ENGINEER MANNY D. PHUEA No. 28886 MECHANICAL

PROJECT SPECIFIC STATE AGENCY APPROVAL

Rev 1
APPROVED
DIV. OF THE STATE ARCHITECT
SACRAMENTO REGIONAL OFFICE
AC FLS SS
APP. # 113876 DATE 7-5-16

ORIGINAL PC STATE AGENCY APPROVAL

IDENTIFICATION STAMP
DIV. OF THE STATE ARCHITECT
CA. DEPT. OF GENERAL SERVICES
PC 02-113876
AC FLS SS
DATE

PRE-CHECK (PC) DOCUMENT - CODE: 2013 CBC
A SEPARATE PROJECT APPLICATION FOR CONSTRUCTION IS REQUIRED

REVISIONS

1	05/17/2016 - PC REVISION
2	
3	
4	

DRAWN BY:

SCALE: AS NOTED

DATE:

SHEET NUMBER

S5.1

05-113876 - 24' x 40' - 130' x 40' EXPOSED STEEL SHEET: S5.1 PLOTTED: 1/12/2016 8:57 AM

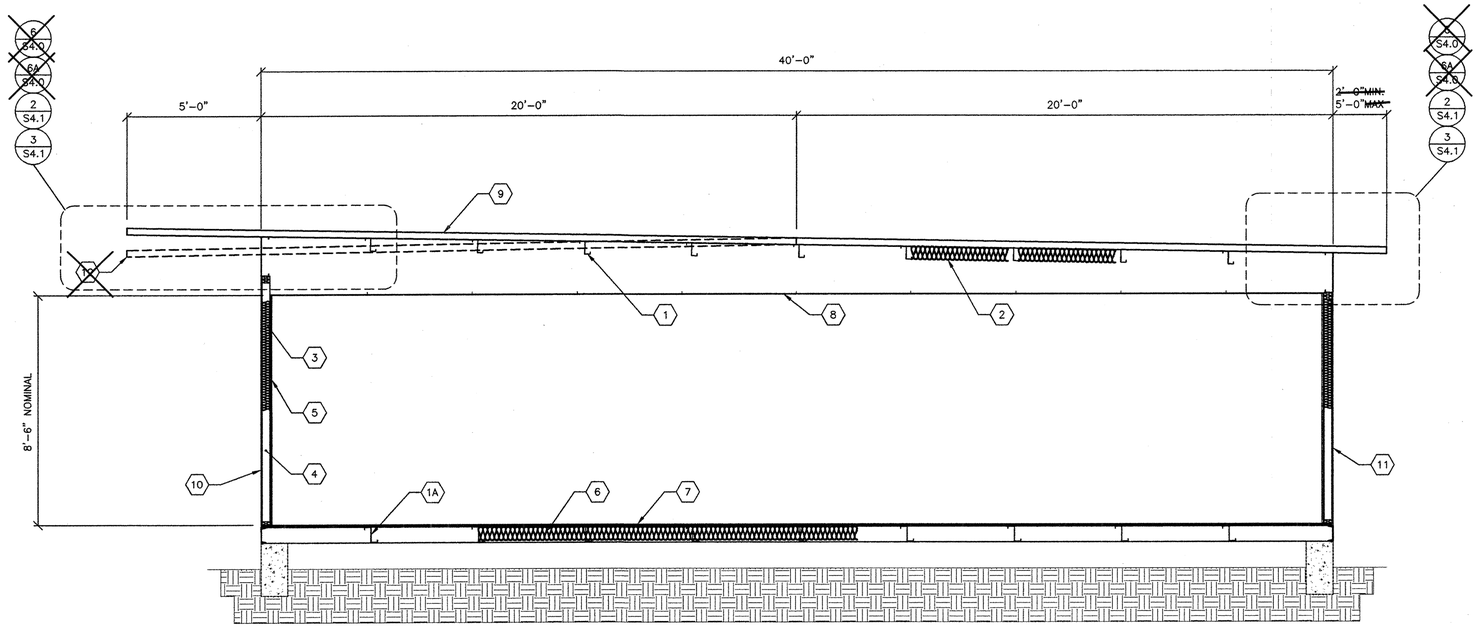

TYP. LONGITUDINAL SECTION-MONO/DUAL PITCH

SCALE: 3/8"=1'-0"

A

1. "Z" PURLINS @ 48" O.C.
1A. STEEL "Z" FLOOR JOISTS
2. R-19 INSULATION w/22 GA WIRE @ 16" O.C.
3. INSULATION w/KRAFT PAPER
4. WALL STUDS PER SHEETS S8.0 & S9.0
5. VINYL FABRIC OVER TACKABLE BRACING PANELS
6. INSULATION w/KRAFT PAPER AND CHICKEN WIRE
7. 1 ⅛" PLYWOOD FLOOR SHEATHING FOR ALT SEE SHEET S3.1, S3.2 & S3.3
8. SUSPENDED T-BAR CEILING
9. METAL ROOF PANELS SEE ROOF FRAMING PLAN
10. TYPICAL SHEATHING NAILING .131x2¼" GALV @ 6" O.C. PANEL EDGES (ALL EDGES BLOCKED).131x2¼" GALV @ 12" O.C. FIELD
11. EXTERIOR WALL FINISH PER EXTERIOR ELEVATIONS
12. ~~ALTERNATE DUAL PITCH~~

KEY NOTES

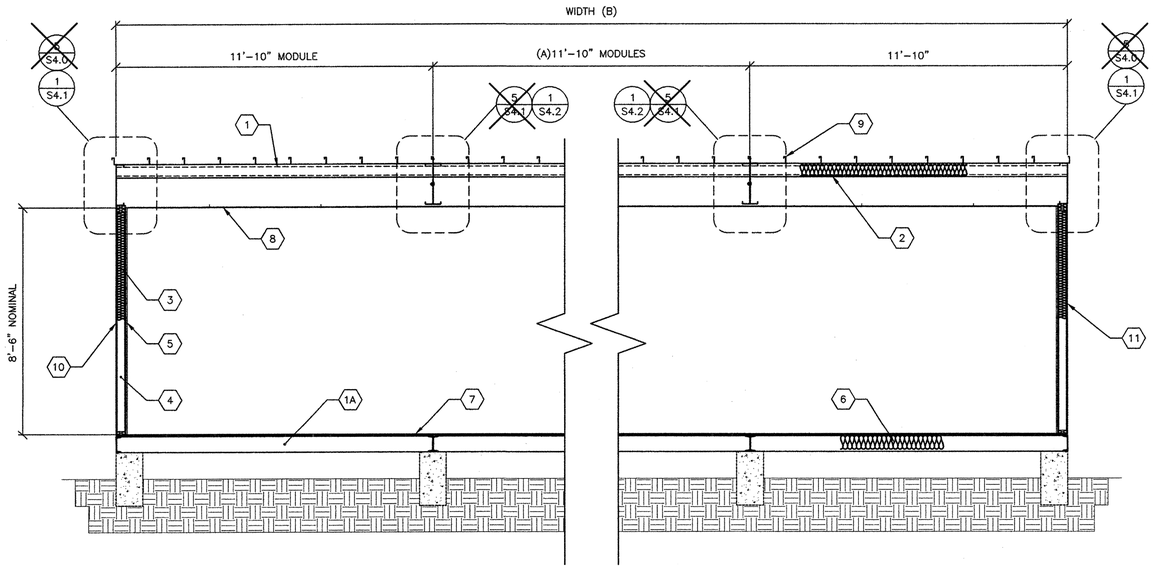

TYP. TRANSVERSE SECTION-MONO/DUAL PITCH

SCALE: 3/8"=1'-0"

B

BLDG SIZE (FT)	TOTAL # OF 12' WIDE MODULES	"A" TOTAL # OF CENTER MODULES	"B" TOTAL BLDG WIDTH
☒ 24' x 40'	2	0	23'-8 1/4"
☐ 36' x 40'	3	1	35'-6 1/2"
☐ 48' x 40'	4	2	47'-4 3/4"
☐ 60' x 40'	5	3	59'-3"
☐ 72' x 40'	6	4	71'-1 1/4"
☐ 84' x 40'	7	5	82'-11 1/2"
☐ 96' x 40'	8	6	94'-9 3/4"
☐ 108' x 40'	9	7	106'-8"
☐ 120' x 40'	10	8	118'-6 1/4"

MODULE SCHEDULE

American Modular Systems
787 Spreckels Ave. Manteca, CA 95336
Phone (209) 825-1921 - Fax (209) 825-7018
americanmodular.com

MODULAR MANUFACTURER PROPRIETARY STATEMENT

THESE DRAWINGS AND THE MATERIAL CONTAINED THEREIN ARE THE PROPERTY OF AMERICAN MODULAR SYSTEMS, INC. (AMS) AND SHALL NOT BE REPRODUCED, COPIED OR OTHERWISE DISPOSED OF DIRECTLY OR INDIRECTLY AND SHALL NOT BE USED IN WHOLE OR IN PART TO ASSIST IN THE MAKING OF OR FOR THE PURPOSE OF FURNISHING ANY INFORMATION FOR THE MAKING OF DRAWINGS, PRINTS, APPARATUS OR PARTS THEREOF WITHOUT THE FULL KNOWLEDGE AND WRITTEN CONSENT OF AMS. ALL PATENTABLE MATERIAL CONTAINED HEREIN AND ORIGINATING WITH AMS SHALL BE THE SOLE PROPERTY OF AMS.

PRE-CHECKED SET NAME

24' x 40' THRU 120' x 40' BUILDINGS

SITE SPECIFIC PROJECT NAME

SHEET TITLE

TYPICAL LONGITUDINAL AND TRANSVERSE FRAME SECTIONS

MANUFACTURER PROFESSIONAL OF RECORD ON PC

LICENSED ARCHITECT RANDALL PATRICK CAVANAGH No. C12631 Ren. 03-31-17 STATE OF CALIFORNIA

REGISTERED PROFESSIONAL ENGINEER No. S3380 Exp.03/31/16 STRUCTURAL STATE OF CALIFORNIA

05/19/2015

PROJECT SPECIFIC STATE AGENCY APPROVAL

IDENTIFICATION STAMP DIV. OF THE STATE ARCHITECT 02 116485 AC — FLS / SS DATE 12-18-2017

ORIGINAL PC STATE AGENCY APPROVAL

IDENTIFICATION STAMP DIV. OF THE STATE ARCHITECT CA. DEPT. OF GENERAL SERVICES PC 02-113876 AC ___ FLS ___ SS ___ DATE 6/22/15

PRE-CHECK (PC) DOCUMENT – CODE: 2013 CBC
A SEPARATE PROJECT APPLICATION FOR CONSTRUCTION IS REQUIRED

REVISIONS

1
2
3
4

DRAWN BY:
SCALE: AS NOTED
DATE:

SHEET NUMBER

S6.0

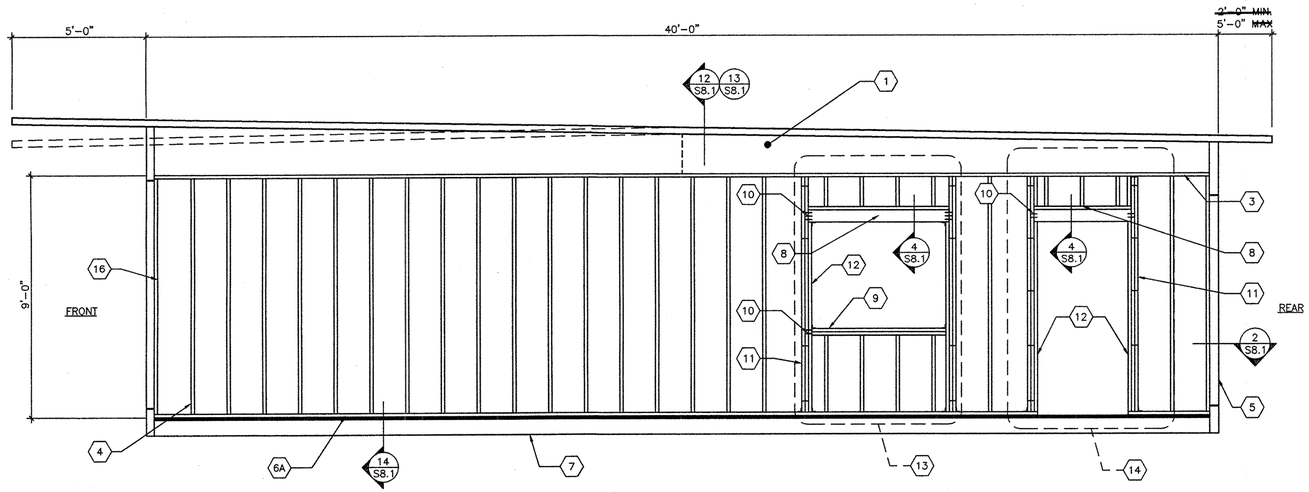

NOTE:
SEE S9.0 FOR ALTERNATE STEEL STUD WALL FRAMING

TYPICAL SIDE WALL FRAMING (MONO/DUAL PITCH)

SCALE: 3/8" = 1'-0" | A

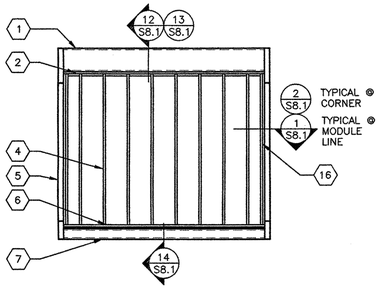

NOTE:
SEE S9.0 FOR ALTERNATE STEEL STUD WALL FRAMING

TYP. END WALL FRAMING w/NO OPENINGS | 1

SCALE: 1/4"=1'-0"

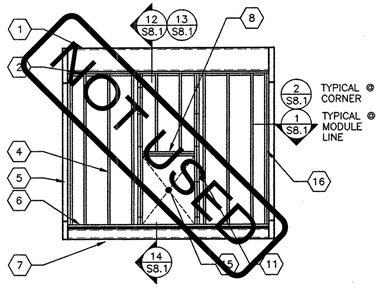

NOTE:
SEE S9.0 FOR ALTERNATE STEEL STUD WALL FRAMING

TYP. END WALL FRAMING w/INDOOR HVAC UNIT OPTIONAL | 2

SCALE: 1/4"=1'-0"

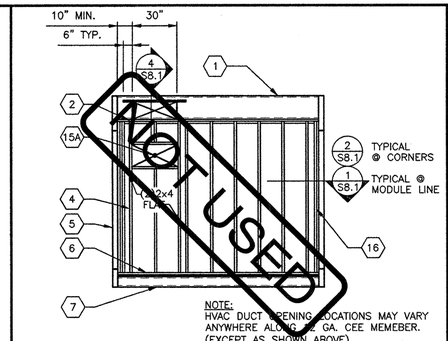

NOTE:
HVAC DUCT OPENING LOCATIONS MAY VARY ANYWHERE ALONG 22 GA. CEE MEMEBER. (EXCEPT AS SHOWN ABOVE)
SEE SHEET 1 FOR OPENING LOCATION

NOTE:
SEE S9.0 FOR ALTERNATE STEEL STUD WALL FRAMING

TYP. END WALL FRAMING w/WALL HUNG HVAC UNIT OPTIONAL | 3

SCALE: 1/4"=1'-0"

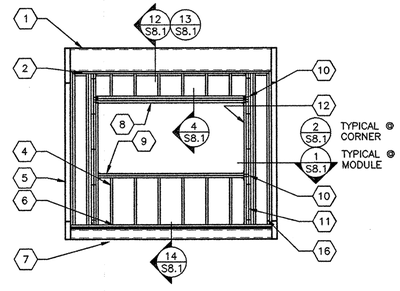

NOTE:
SEE S9.0 FOR ALTERNATE STEEL STUD WALL FRAMING

TYPICAL END WALL FRAMING WINDOW

SCALE: 1/4"=1'-0" | 4

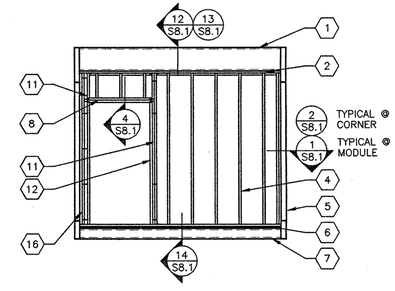

NOTE:
SEE S9.0 FOR ALTERNATE STEEL STUD WALL FRAMING

TYPICAL END WALL FRAMING w/DOOR

SCALE: 1/4"=1'-0" | 5

KEY NOTES

1. ROOF BEAM
2. 2x4 PLATE NO SPLICE
3. 2x4 PLATE
4. 2x4 STUDS SPACED PER SCHEDULE w/(3) 0.131"ø x3" END NAILS OR (4) 0.131"ø x3" TOE NAILS T&B TO PLATES TYP.
5. HSS COLUMN
6. 2x4 BOTTOM PLATE P.T. @ CONCRETE FLOORS
6A. 2x4 BOTTOM PLATE P.T. @ CONCRETE FLOORS
7. PERIMETER FLOOR BEAM
8. HEADER PER SCHEDULE AND DETAIL 4/S8.1
9. WINDOW SILL PER SCHEDULE
10. END NAILS THRU KING STUD TO HEADER OR SILL PER SCHEDULE
11. KING STUDS PER SCHEDULE
12. 2x4 TRIMMER
13. OPTIONAL WINDOW OPENING FRAMING PER SCHEDULE (REFER TO 4/S8.0 FOR DETAILS AND FLOOR PLANS FOR LOCATIONS)
14. OPTIONAL DOOR OPENING FRAMING PER SCHEDULE (REFER TO 5/S8.0 FOR DETAILS AND FLOOR PLANS FOR LOCATIONS)
15. HVAC OPENING @ INDOOR UNIT
15A. HVAC OPENING @ EXTERIOR WALL
16. 2x NAILER

FINISH TYPE	FOUNDATION TYPE	WALL FINISH COMMENTS	STUD TYPE	STUD SPACING TYPICAL	STUD SPACING @ CORNERS
5/8" PLYWOOD SHEATHING 303 CONFORMING TO PS1-95. VERTICAL GROOVES @ 8" O.C.	WOOD OR CONCRETE	WALL FINISH PER A5.1 JOINT DETAIL SEE 15/S8.1 NAILING PER BLDG SECTIONS	HEM FIR #2	@ 16" O.C.	@ 16" O.C.
			DOUG FIR #2	@ 16" O.C.	@ 16" O.C.
5/16" HARDIBOARD WITH SYNTHETIC STUCCO 5/16" HARDI-LAP SIDING	WOOD OR CONCRETE	PER SHEETS A5.5 & A5.7	HEM FIR #2	@ 16" O.C.	@ 16" O.C.
			DOUG FIR #2	@ 16" O.C.	@ 16" O.C.
1/2" PLYWOOD SHEATHING CONFORMING TO PS1-95, APA RATED, 5 PLY 32/16, OR 1/2" O.S.B. PANELS EXPOSURE 1 w/ 7/8" STUCCO	CONCRETE ONLY	WALL FINISH PER A5.3 NAILING PER BLDG SECTIONS	HEM FIR #2	@ 16" O.C.	@ 12" O.C.
			DOUG FIR #2	@ 16" O.C.	@ 16" O.C.

1. ALL NAILS IN EXTERIOR APPLICATIONS TO BE GALVANIZED.
2. BUILDING CORNERS ARE DEFINED AS A DISTANCE OF 4 FEET IN BOTH DIRECTIONS FROM EACH CORNER OF THE BUILDING
3. TYPICAL PLYWOOD NAILING WHERE OCCURS .131x2 1/4" GALV @ 6" O.C E.N. & 12" O.C. F.N. (ALL EDGES BLOCKED)

EXTERIOR WALL FINISH/WALL STUD SCHEDULE

~~DOOR/WINDOW OPENINGS AT TYPICAL WALL~~ (NO STUCCO)

OPENING	HEADER	WINDOW SILLS	KING STUDS[1]	KING STUDS INTERNAILING SPACING W/0.131x3" NAILS STAGGERED	HEADER TO KING STUDS NAILS	SILL TO KING STUDS NAILS
8'-0" UP TO 10'-0"	(4) 2x4	(2) 2x4	3	20" O.C. MAX	6	5
6'-0" UP TO 8'-0"	(3) 2x4	(2) 2x4	2	20" O.C. MAX	5	4
3'-0" UP TO 6'-0"	(3) 2x4	(2) 2x4	2	20" O.C. MAX	4	3
3'-0" OR LESS	(3) 2x4	(2) 2x4	2	20" O.C. MAX	3	2
DOOR/WINDOW OPENINGS AT STUCCO WALLS						
OPENING	HEADER	WINDOW SILLS	KING STUDS[1]	KING STUDS INTERNAILING SPACING W/0.131x3" NAILS STAGGERED	HEADER TO KING STUDS NAILS	SILL TO KING STUDS NAILS
8'-0" UP TO 10'-0"	(4) 2x4	(4) 2x4	4	16" O.C. MAX	6	6
6'-0" UP TO 8'-0"	(3) 2x4	(2) 2x4	3	16" O.C. MAX	5	4
3'-0" UP TO 6'-0"	(3) 2x4	(2) 2x4	3	16" O.C. MAX	4	3
3'-0" OR LESS	(3) 2x4	(2) 2x4	2	16" O.C. MAX	3	3

1. PROVIDE (2) SIMPSON A34'S T&B OF KING STUDS TO PLATES FOR OPENINGS GREATER THAN 3'-0". PROVIDE (1) SIMPSON A34'S T&B OF KING STUDS TO PLATES FOR OPENINGS 3'-0" OR LESS.
2. WHEN MORE THAN A SINGLE SILL PLATE IS REQUIRED, INTERNAIL w/0.131"ø3" NAILS @ 12" O.C. STAGGERED
3. BUILDING CORNERS ARE DEFINED AS A DISTANCE OF 4 FEET IN BOTH DIRECTIONS FROM EACH CORNER OF THE BUILDING
4. TABLE ABOVE IS VALID FOR BOTH CORNER & NON-CORNER LOCATIONS

OPENING SCHEDULE

American Modular Systems
787 Spreckels Ave. Manteca, CA 95336
Phone (209) 825-1921 - Fax (209) 825-7018
americanmodular.com

MODULAR MANUFACTURER PROPRIETARY STATEMENT

THESE DRAWINGS AND THE MATERIAL CONTAINED THEREIN ARE THE PROPERTY OF AMERICAN MODULAR SYSTEMS, INC. (AMS) AND SHALL NOT BE REPRODUCED, COPIED OR OTHERWISE DISPOSED OF DIRECTLY OR INDIRECTLY AND SHALL NOT BE USED IN WHOLE OR IN PART TO ASSIST IN THE MAKING OF OR FOR THE PURPOSE OF FURNISHING ANY INFORMATION FOR THE MAKING OF DRAWINGS, PRINTS, APPARATUS OR PARTS THEREOF WITHOUT THE FULL KNOWLEDGE AND WRITTEN CONSENT OF AMS. ALL PATENTABLE MATERIAL CONTAINED HEREIN AND ORIGINATING WITH AMS SHALL BE THE SOLE PROPERTY OF AMS.

PRE-CHECKED SET NAME

24' x 40' THRU 120' x 40' BUILDINGS

SITE SPECIFIC PROJECT NAME

SHEET TITLE

WOOD STUD WALL FRAMING ELEVATIONS & SCHEDULES

MANUFACTURER PROFESSIONAL OF RECORD ON PC

LICENSED ARCHITECT GANGULY PATRICK CHAMAGNI No. C12631 Ren. 03-31-17 STATE OF CALIFORNIA

REGISTERED PROFESSIONAL ENGINEER MANUEL D. FRANCO No. S3380 Exp:03/31/16 STRUCTURAL STATE OF CALIFORNIA

05/19/2015

PROJECT SPECIFIC STATE AGENCY APPROVAL

IDENTIFICATION STAMP DIV. OF THE STATE ARCHITECT 02 116495 AC — FLS — SS DATE 12-18-2015

ORIGINAL PC STATE AGENCY APPROVAL

IDENTIFICATION STAMP DIV. OF THE STATE ARCHITECT CA. DEPT. OF GENERAL SERVICES PC 02-113876 AC FLS SS DATE 6/22/15

PRE-CHECK (PC) DOCUMENT - CODE: 2013 CBC
A SEPARATE PROJECT APPLICATION FOR CONSTRUCTION IS REQUIRED

REVISIONS

1
2
3
4

DRAWN BY:
SCALE: AS NOTED
DATE:

SHEET NUMBER

S8.0

02-113876 - 24' x 40' - 130 mph - 40' EXPOSED SIDE - 05/19/15

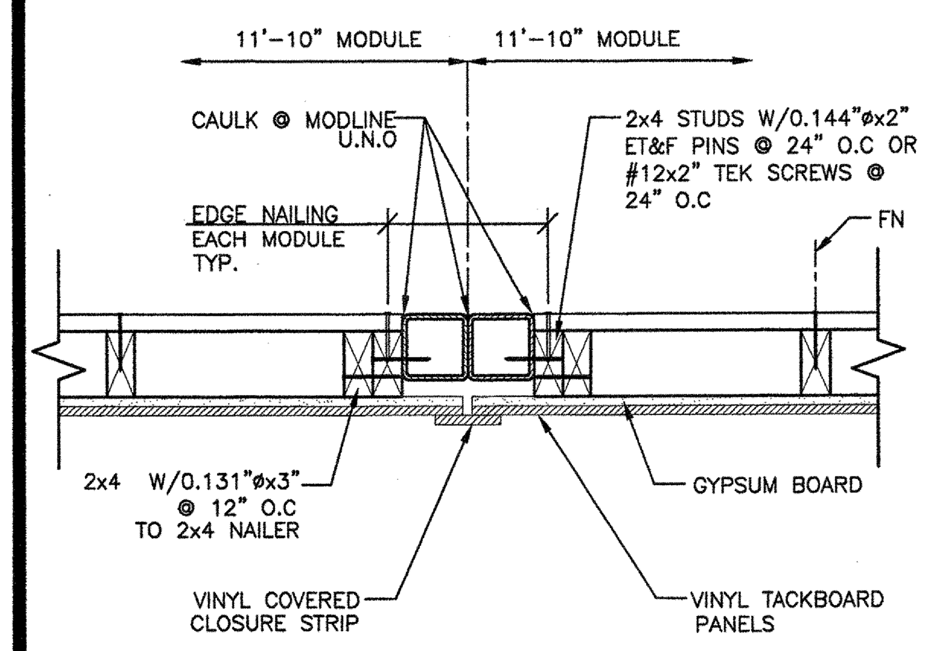

WALL TO COLUMN TYP. DETAIL @ MODLINES 1
FOR COLUMN LOCATION REFER TO ARCH. DETAILS — SCALE: 1 1/2"=1'-0"

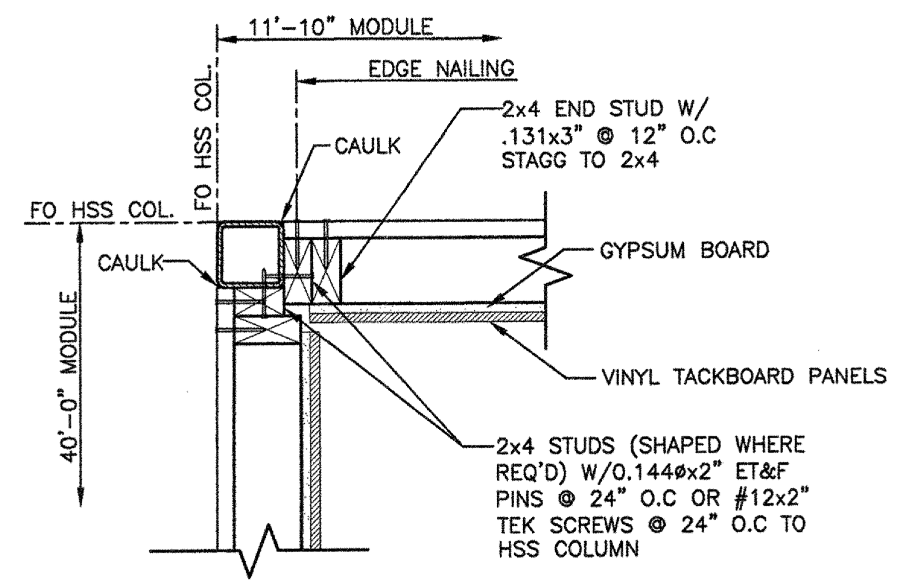

WALL TO COLUMN TYP. DETAIL @ CORNER 2
FOR COLUMN LOCATION REFER TO ACRH. DETAILS — SCALE: 1 1/2"=1'-0"

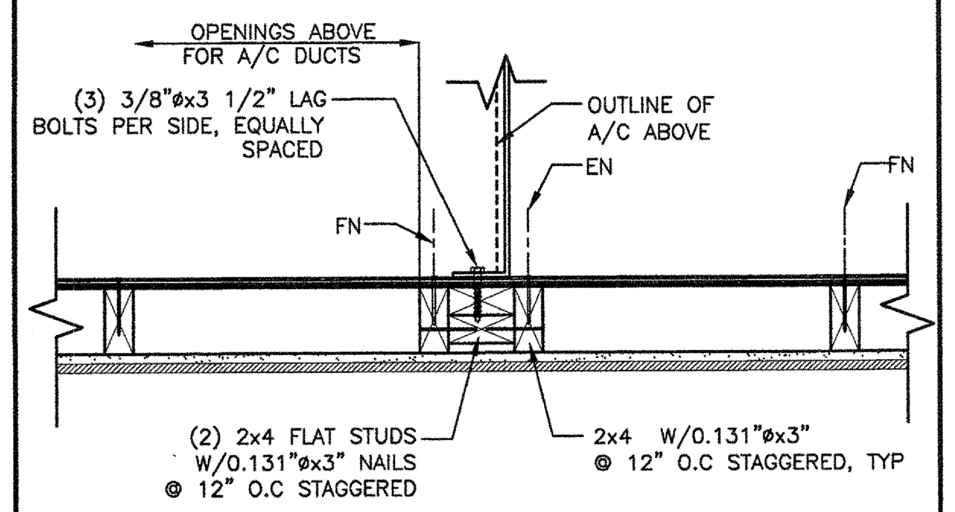

WALL HUNG HVAC DETAIL ATTACHMENT 3
SCALE: 1 1/2"=1'-0"

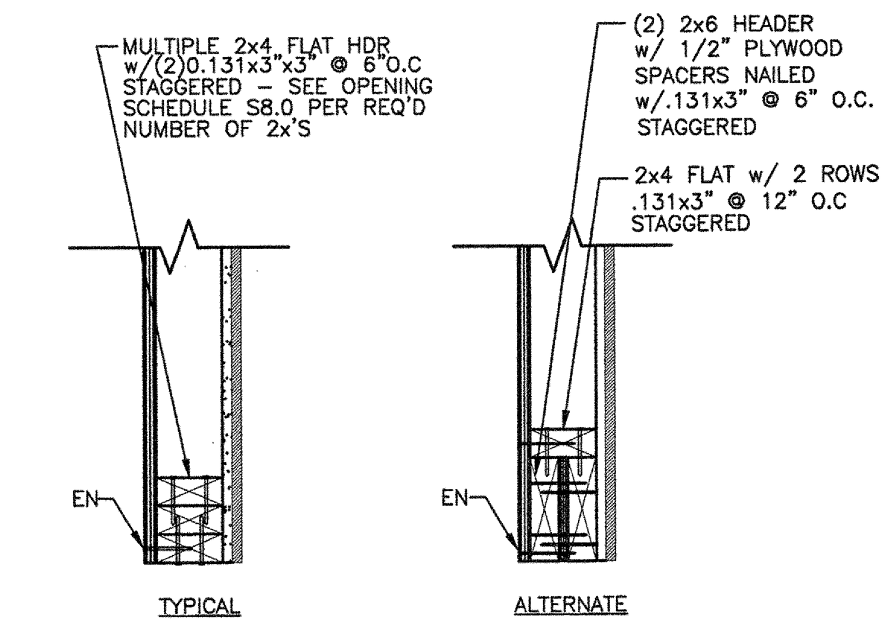

WALL HEADER DETAILS & ALTERNATE 4
SCALE: 1 1/2"=1'-0"

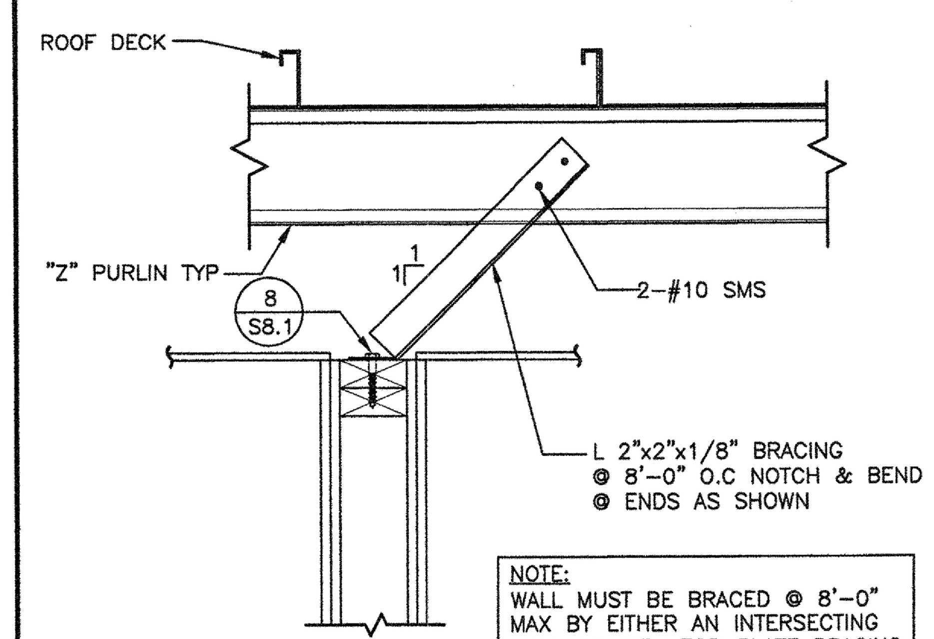

NOTE:
WALL MUST BE BRACED @ 8'-0" MAX BY EITHER AN INTERSECTING WALL OR WITH TOP PLATE BRACING TO ROOF FRAMING.

TYP. INTERIOR WALL BRACING 5
BRACE PARALLEL TO PURLINS — SCALE: 1 1/2"=1'-0"

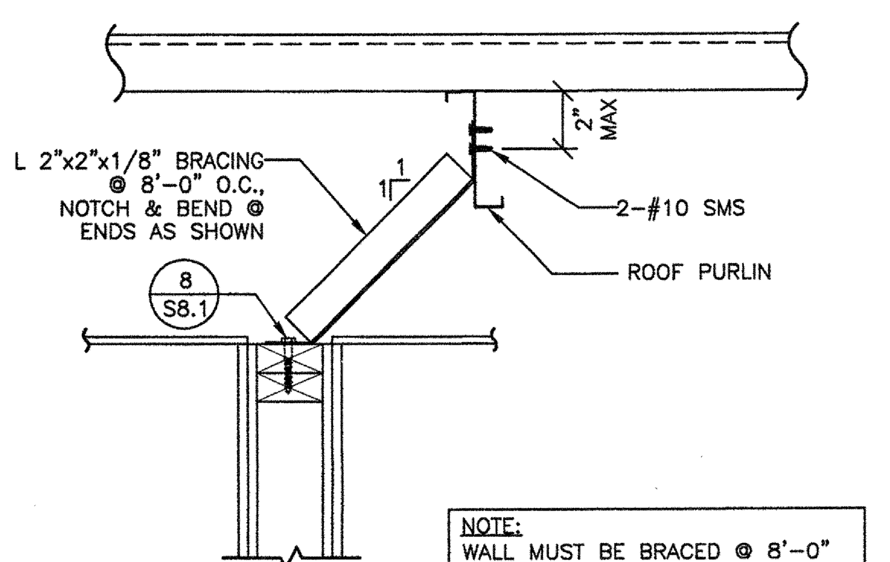

NOTE:
WALL MUST BE BRACED @ 8'-0" MAX BY EITHER AN INTERSECTING WALL OR WITH TOP PLATE BRACING TO ROOF FRAMING.

TYP. INTERIOR WALL BRACING 6
BRACE PERPENDICULAR TO PURLINS — SCALE: 1 1/2"=1'-0"

NOTE:
WALL MUST BE BRACED @ 8'-0" MAX BY EITHER AN INTERSECTING WALL OR WITH WITH TOP PLATE BRACING TO ROOF FRAMING

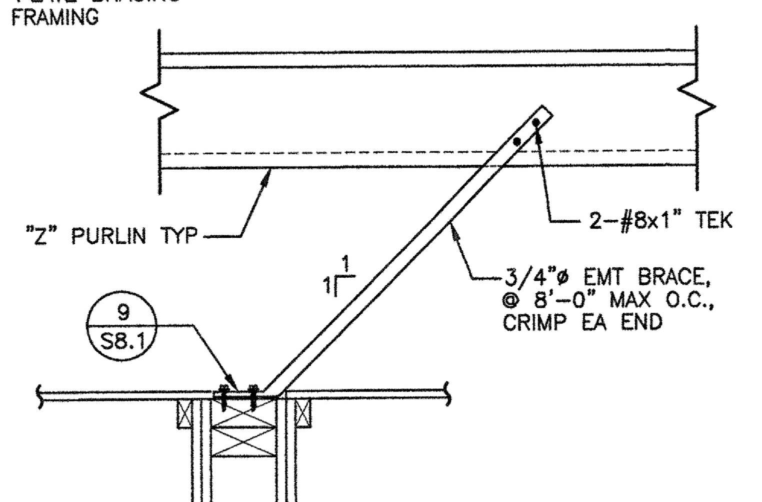

NOTE:
WALL MUST BE BRACED @ 8'-0" MAX BY EITHER AN INTERSECTING WALL OR WITH TOP PLATE BRACING TO ROOF FRAMING.

ALT. INTERIOR WALL BRACING w/EMT BRACE 7
BRACE PARALLEL TO PURLINS — SCALE: 1 1/2"=1'-0"

NOTE:
WALL MUST BE BRACED @ 8'-0" MAX BY EITHER AN INTERSECTING WALL OR WITH WITH TOP PLATE BRACING TO ROOF FRAMING

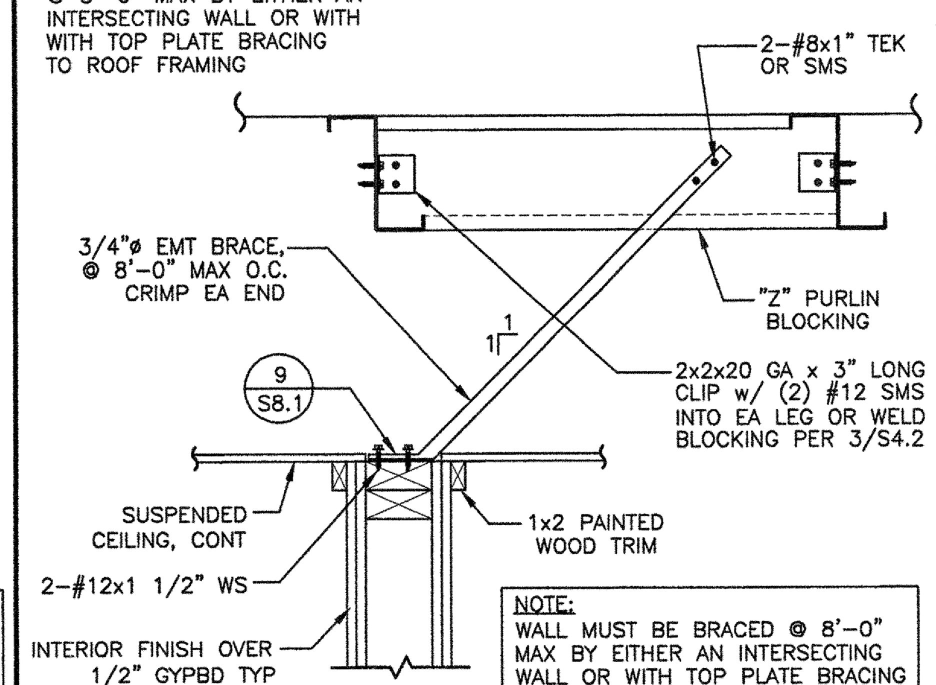

NOTE:
WALL MUST BE BRACED @ 8'-0" MAX BY EITHER AN INTERSECTING WALL OR WITH TOP PLATE BRACING TO ROOF FRAMING.

ALT. INTERIOR WALL BRACING w/EMT BRACE 7A
BRACE PERPENDICULAR TO PURLINS — SCALE: 1 1/2"=1'-0"

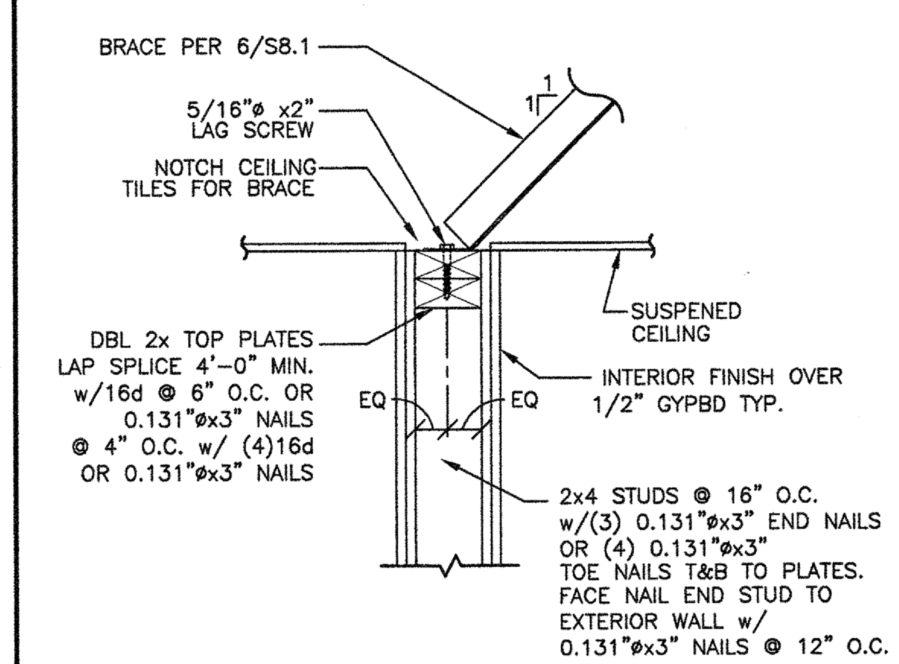

TYP. INTERIOR WALL BRACING 8
INTERIOR PARTITION BRACING — SCALE: 1 1/2"=1'-0"

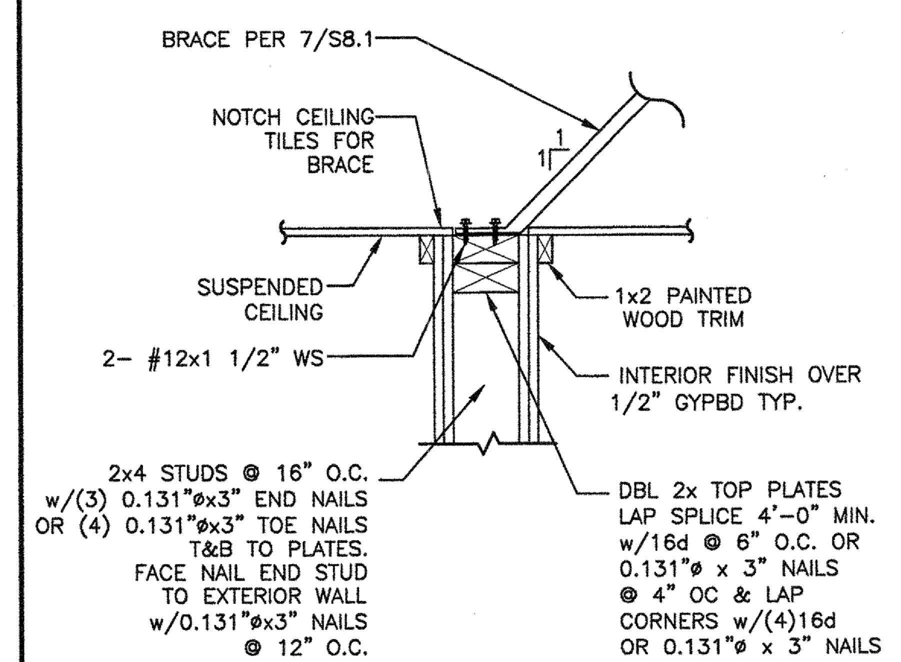

ALT. INTERIOR WALL BRACING 9
INTERIOR PARTITION BRACING w/EMT BRACING — SCALE: 1 1/2"=1'-0"

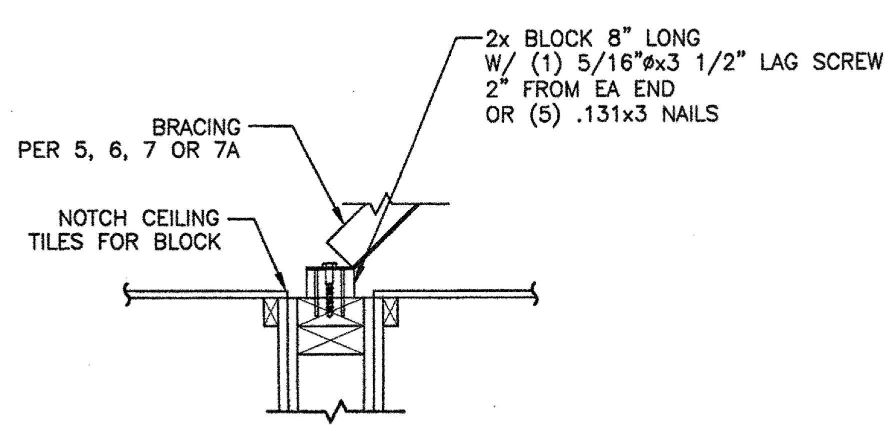

ALT. BLOCKING @ INT. WALL BRACING 9A
SCALE: 1 1/2"=1'-0"

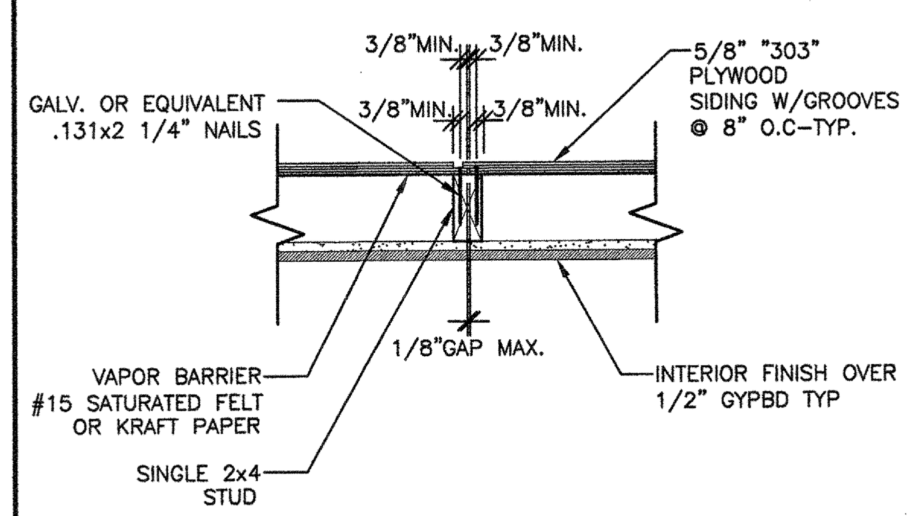

TYP. SIDING JOINT 10
SCALE: 1 1/2"=1'-0"

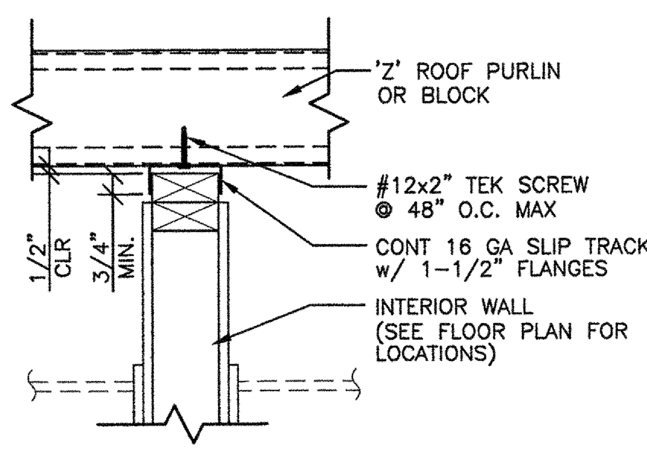

ALT. INTERIOR WALL ATTACHMENT 11
SCALE: 1 1/2"=1'-0"

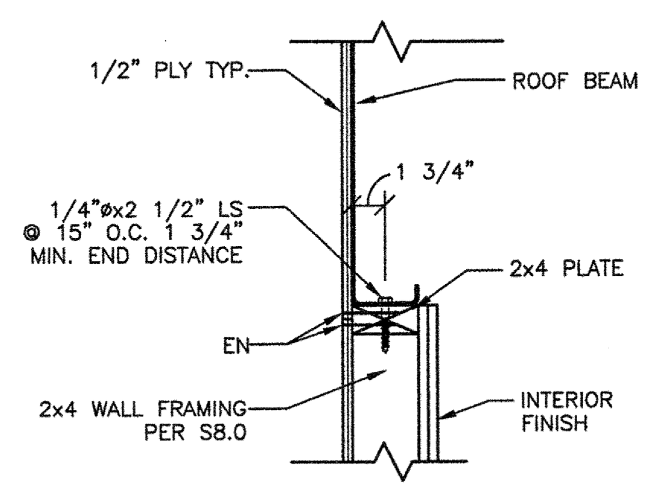

EXTERIOR WALL TO ROOF BEAM DETAIL 12
SCALE: 1 1/2"=1'-0"

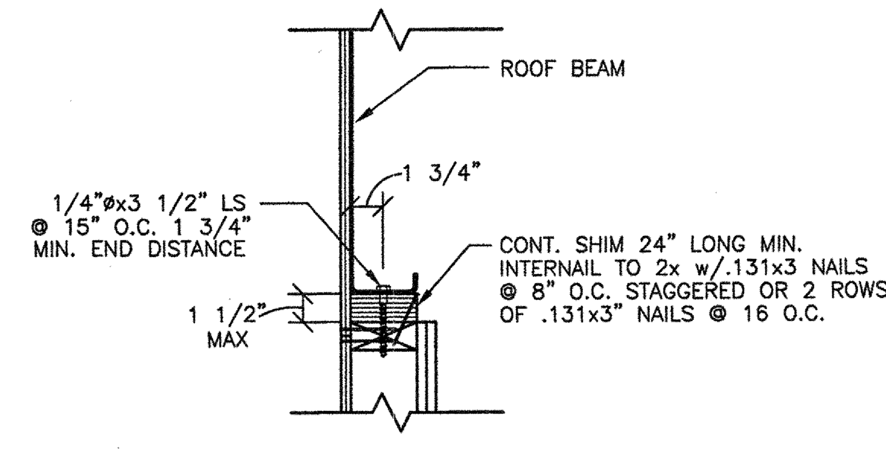

EXTERIOR WALL TO ROOF BEAM DETAIL w/ SHIM CONDITION 13
SCALE: 1 1/2"=1'-0"

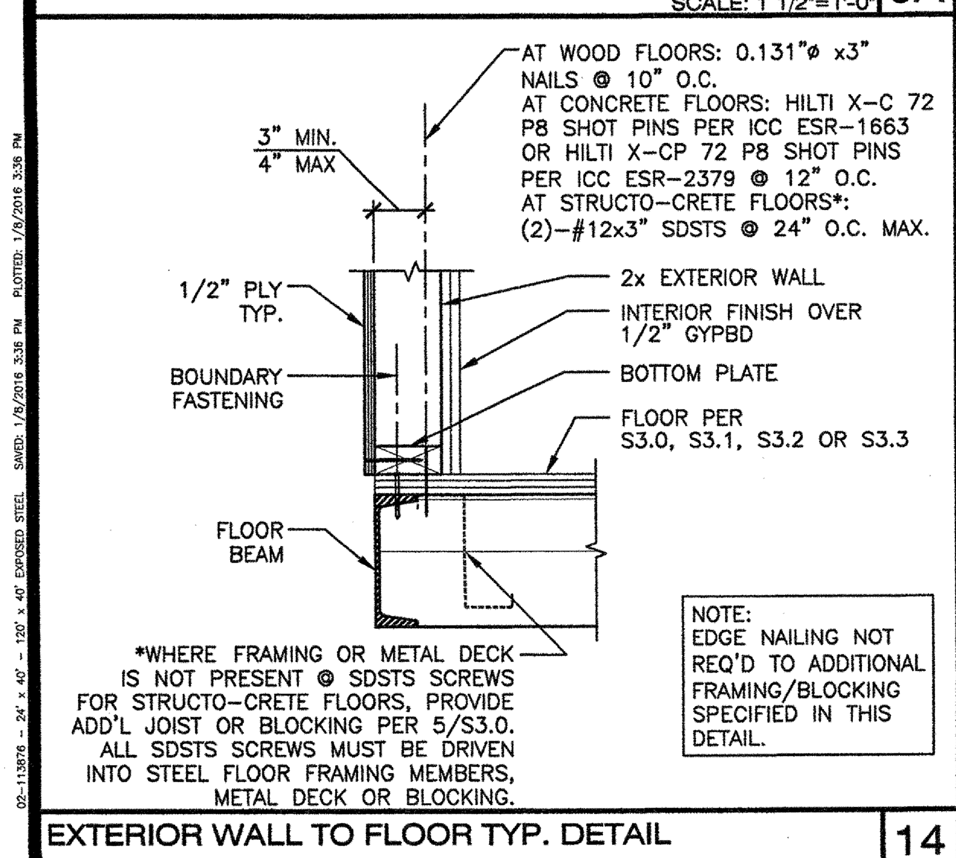

NOTE:
EDGE NAILING NOT REQ'D TO ADDITIONAL FRAMING/BLOCKING SPECIFIED IN THIS DETAIL.

EXTERIOR WALL TO FLOOR TYP. DETAIL 14
SCALE: 1 1/2"=1'-0"

NOTE:
EDGE NAILING NOT REQ'D TO ADDITIONAL FRAMING/BLOCKING SPECIFIED IN THIS DETAIL.

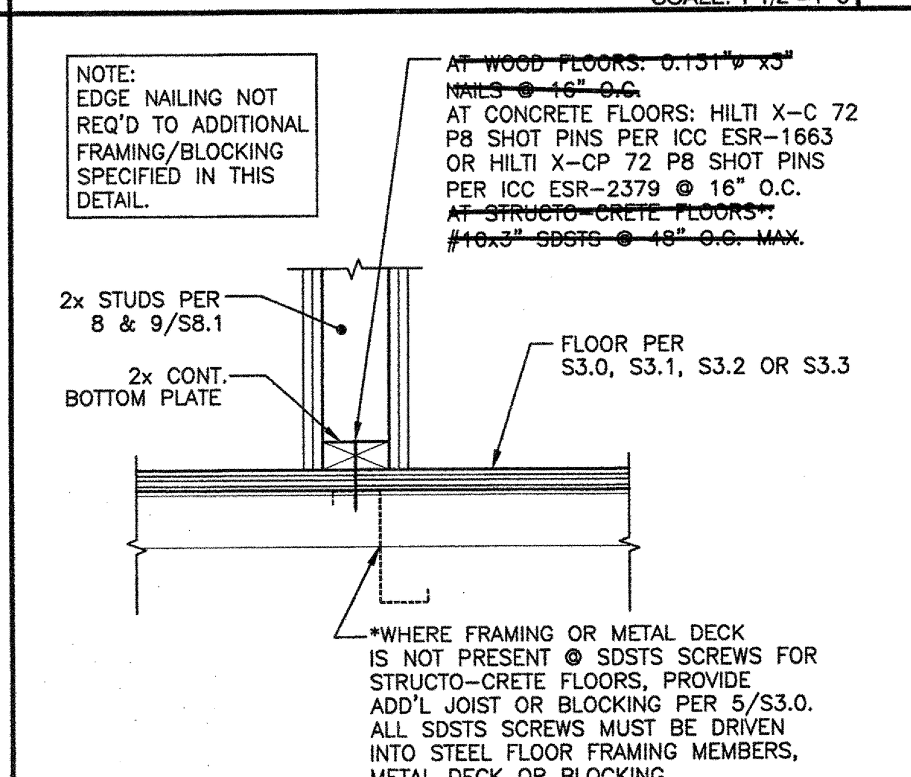

WALL PARALLEL TO FLOOR JOIST

TYP. INTERIOR NON-BEARING WALL ATTACHMENT (PARALLEL TO FRAMING) 15
SCALE: 1 1/2"=1'-0"

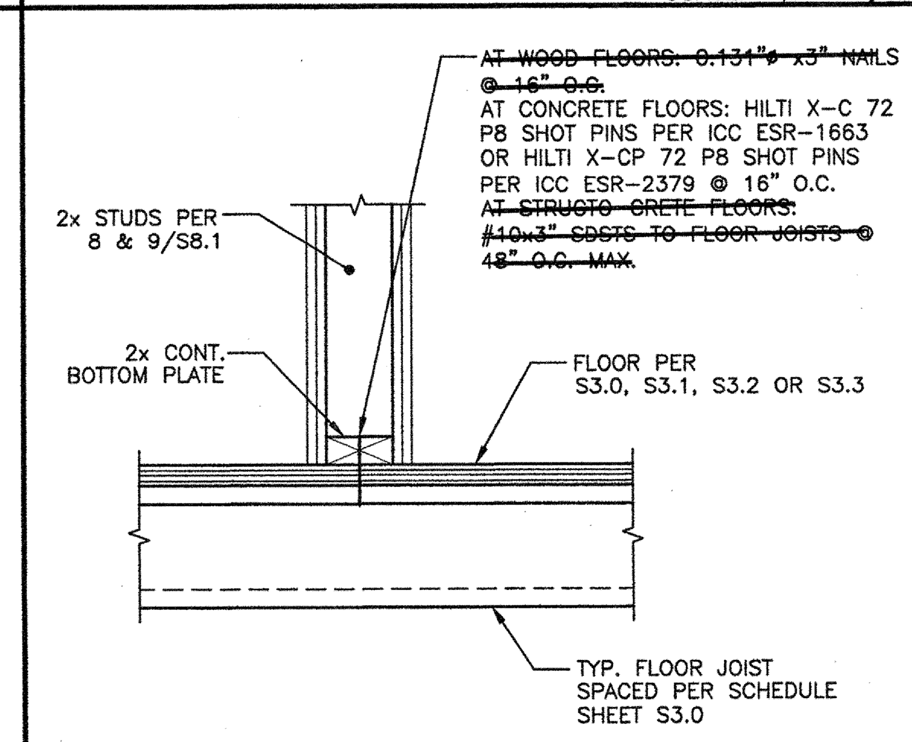

WALL PERPENDICULAR TO FLOOR JOIST

TYP. INTERIOR NON-BEARING WALL ATTACHMENT (PERPENDICULAR TO FRAMING) 16
SCALE: 1 1/2"=1'-0"

NOT USED 17

NOT USED 18

IDENTIFICATION STAMP
DIV. OF THE STATE ARCHITECT
02 116495
AC — FLS ✓ SS
DATE 12-18-2017

AMS®
American Modular Systems

787 Spreckels Ave. Manteca, CA 95336
Phone (209) 825-1921 - Fax (209) 825-7018
americanmodular.com

MODULAR MANUFACTURER PROPRIETARY STATEMENT

THESE DRAWINGS AND THE MATERIAL CONTAINED THEREIN ARE THE PROPERTY OF AMERICAN MODULAR SYSTEMS, INC. (AMS) AND SHALL NOT BE REPRODUCED, COPIED OR OTHERWISE DISPOSED OF DIRECTLY OR INDIRECTLY AND SHALL NOT BE USED IN WHOLE OR IN PART TO ASSIST IN THE MAKING OF OR FOR THE PURPOSE OF FURNISHING ANY INFORMATION FOR THE MAKING OF DRAWINGS, PRINTS, APPARATUS OR PARTS THEREOF WITHOUT THE FULL KNOWLEDGE AND WRITTEN CONSENT OF AMS. ALL PATENTABLE MATERIAL CONTAINED HEREIN AND ORIGINATING WITH AMS SHALL BE THE SOLE PROPERTY OF AMS.

PRE-CHECKED SET NAME

24' x 40' THRU 120' x 40' BUILDINGS

SITE SPECIFIC PROJECT NAME

SHEET TITLE

WOOD STUDS
WALL FRAMING DETAILS

MANUFACTURER PROFESSIONAL OF RECORD ON PC

LICENSED ARCHITECT — RANDALL PATRICK CAVANAGH — No. C12631 — Ren. 03-31-17 — STATE OF CALIFORNIA

REGISTERED PROFESSIONAL ENGINEER — MANNY D. FRISCH — No. S3380 — STRUCTURAL — STATE OF CALIFORNIA

PROJECT SPECIFIC STATE AGENCY APPROVAL

Rev 1
APPROVED
DIV. OF THE STATE ARCHITECT
SACRAMENTO REGIONAL OFFICE
AC — F/LS — SS
APP. # 02-113876 DATE 7-5-16

ORIGINAL PC STATE AGENCY APPROVAL

IDENTIFICATION STAMP
DIV. OF THE STATE ARCHITECT
CA. DEPT. OF GENERAL SERVICES
PC 02-113876
AC____ FLS____ SS____
DATE____

PRE-CHECK (PC) DOCUMENT – CODE: 2013 CBC
A SEPARATE PROJECT APPLICATION FOR CONSTRUCTION IS REQUIRED

REVISIONS
1 05/17/2016 – PC REVISION
2
3
4

DRAWN BY:
SCALE: AS NOTED
DATE:

SHEET NUMBER

S8.1

02-113876 - 24' x 40' - 120' x 40' EXPOSED STEEL SAVED: 1/8/2016 3:36 PM PLOTTED: 1/8/2016 3:36 PM

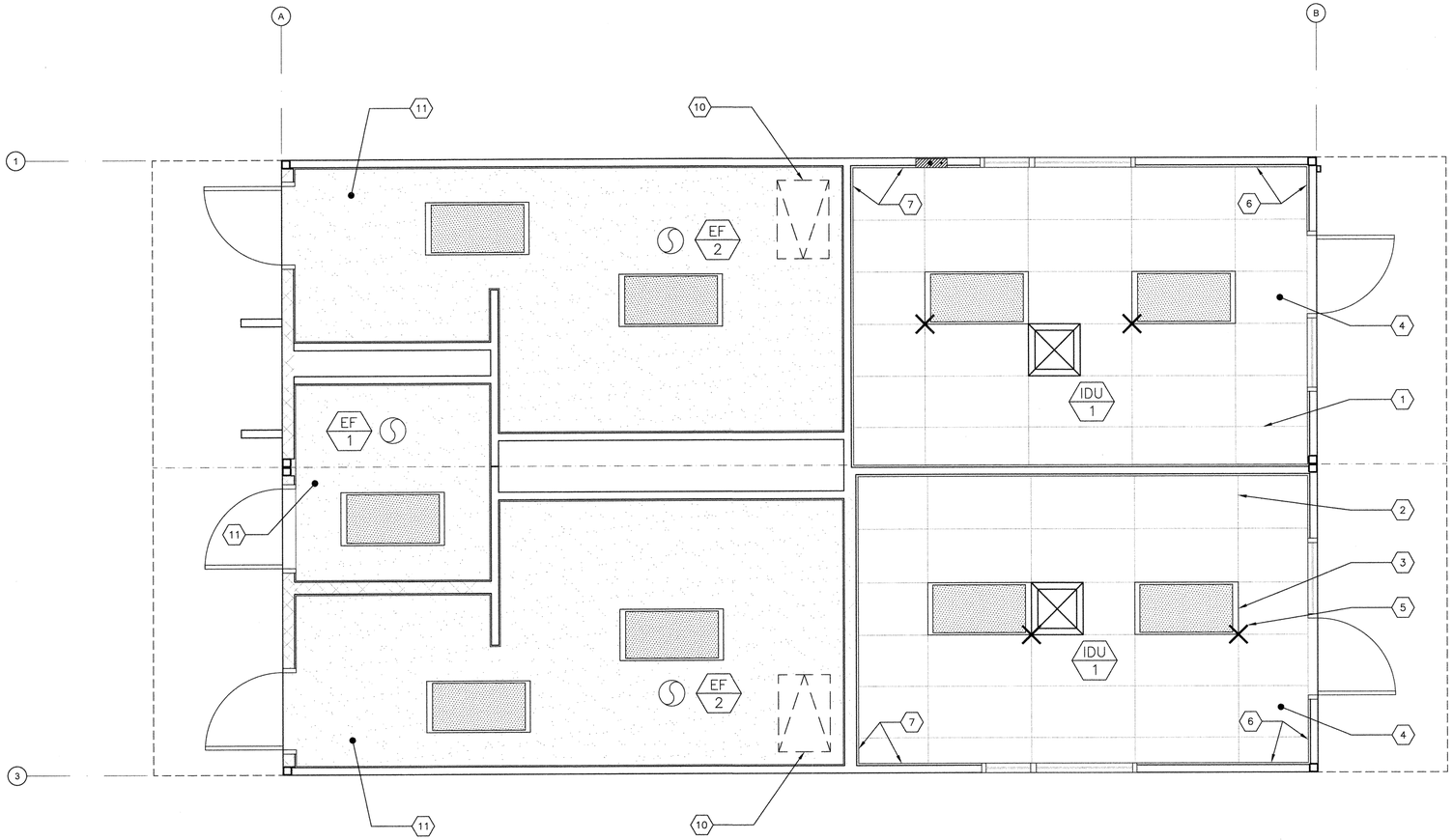

REFLECTED CEILING PLAN

SCALE: 3/8" = 1'-0" 1

1. MAIN RUNNER, TYP.
2. CROSS RUNNER, TYP.
3. INTERIOR LIGHT FIXTURE, REFER TO SHEET SHEET E1.0 FOR SPEC'S
4. CEILING HEIGHT @ 9'-0" MIN. SEE SCHEDULE
5. SPLAY WIRE, SEE 3/M1.4 FOR DETAILS
6. FIXED CEILING END
7. FREE CEILING END
8. NOT USED
9. NOT USED
10. ATTIC ACCESS
11. GYPSUM BOARD CEILING @ 8'-6" SEE DETAIL 8 & 13/M1.6

KEY NOTES

1. WHERE TWO OR MORE HVAC UNITS SERVE A COMMON SPACE, UNITS SHALL BE EQUIPPED WITH A DUCT SMOKE DETECTOR FOR AUTO SHUTDOWN. INTERCONNECT WITH FIRE ALARM SYSTEM
2. AUTOMATIC SHUT-OFF IS NOT REQUIRED WHEN ALL OCCUPIED ROOMS SERVED BY THE AIR HANDLING EQUIPMENT HAVE DIRECT ACCESS TO THE EXTERIOR AND THE TRAVEL DISTANCE DOES NOT EXCEEDS 100 FT. PER CMC 609 EXEPTION #2
3. LIGHTING FIXTURE MAY BE INSTALLED ROTATED 90° FROM SHOWN TO MATCH T-GRID.

MEP COMPONENT ANCHORAGE NOTE

ALL MECHANICAL, PLUMBING, AND ELECTRICAL COMPONENTS SHALL BE ANCHORED AND INSTALLED PER THE DETAILS ON THE DSA APPROVED CONSTRUCTION DOCUMENTS. WHERE NO DETAIL IS INDICATED, THE FOLLOWING COMPONENTS SHALL BE ANCHORED OR BRACED TO MEET THE FORCE AND DISPLACEMENT REQUIREMENTS PRESCRIBED IN THE 2013 CBC, SECTIONS 161A.1.18 THROUGH 161A.1.26 AND ASCE 7-10 CHAPTER 13, 26, AND 30.

1. ALL PERMANENT EQUIPMENT AND COMPONENTS.
2. TEMPORARY OR MOVABLE EQUIPMENT THAT IS PERMANENTLY ATTACHED (E.G. HARD WIRED) TO THE BUILDING UTILITY SERVICES SUCH AS ELECTRICITY, GAS OR WATER.
3. MOVABLE EQUIPMENT WHICH IS STATIONED IN ONE PLACE FOR MORE THAN 8 HOURS AND HEAVIER THAN 400 POUNDS ARE REQUIRED TO BE ANCHORED WITH TEMPORARY ATTACHMENTS.

THE FOLLOWING MECHANICAL AND ELECTRICAL COMPONENTS SHALL BE POSITIVELY ATTACHED TO THE STRUCTURE, BUT THE ATTACHMENT NEED NOT BE DETAILED ON THE PLANS. THESE COMPONENTS SHALL HAVE FLEXIBLE CONNECTIONS PROVIDED BETWEEN THE COMPONENT AND ASSOCIATED DUCTWORK, PIPING, AND CONDUIT.

A. COMPONENTS WEIGHING LESS THAN 400 POUNDS AND THAT HAVE A CENTER OF MASS LOCATED 4 FEET OR LESS ABOVE THE ADJACENT FLOOR OR ROOF LEVEL THAT DIRECTLY SUPPORT THE COMPONENT.
B. COMPONENTS WEIGHING LESS THAN 20 POUNDS, OR IN THE CASE OF DISTRIBUTED SYSTEMS, LESS THAN 5 POUNDS PER FOOT, WHICH ARE SUSPENDED FROM A ROOF OR FLOOR OR HUNG FORM A WALL.

FOR THOSE ELEMENTS THAT DO NOT REQUIRE DETAILS ON THE APPROVED DRAWINGS, THE INSTALLATION SHALL BE SUBJECT TO THE APPROVAL OF THE STRUCTURAL ENGINEER OF RECORD AND THE DSA DISTRICT STRUCTURAL ENGINEER. THE PROJECT INSPECTOR WILL VERIFY THAT ALL COMPONENTS AND EQUIPMENT HAVE BEEN ANCHORED IN ACCORDANCE WITH ABOVE REQUIREMENTS.

PIPING, DUCTWORK, AND ELECTRICAL DISTIBUTION SYSTEM BRACING NOTE

PIPING, DUCTWORK, AND ELECTRICAL DISTRIBUTION SYSTEMS SHALL BE BRACED TO COMPLY WITH THE FORCES AND DISPLACEMENTS PRESCRIBED IN ASCE 7-10 SECTION 13.3 AS DEFINED IN ASCE 7-10 SECTION 13.6.8, 13.6.7, 13.6.5.6, AND 2013 CBC, SECTIONS 1616A.1.23, 1616A.1.24, 1616A.1.25 AND 1616A.1.26.

THE BRACING AND ATTACHMENTS TO THE STRUCTURE SHALL BE DETAILED ON THE APPROVED DRAWINGS OR THEY SHALL COMPLY WITH ONE OF THE OSHPD PRE-APPROVALS (OPM#).

COPIES OF THE BRACING SYSTEM INSTALLATION GUIDE OR MANUAL SHALL BE AVAILABLE ON THE JOB SITE PRIOR TO THE START OF HANGING AND BRACING OF THE PIPE, DUCTWORK, AND ELECTRICAL DISTRIBUTION SYSTEMS.

SCHEDULE

EXHAUST VENT SCHEDULE

MARK	DESCRIPTION	CFM	WATTS	S.P.	VOLT/PH	MODEL
EF 1	EXHAUST FAN	110	1050	.10"	115-1ø	NUTONE 672R CEILING MOUNTED 180W INPUT 23 LBS (OR EQUAL)
EF 2	EXHAUST FAN	210	127	.125"	120-1ø	BROAN L200 CEILING MOUNTED 180W INPUT 23 LBS (OR EQUAL)

NOTES:
1. VENT EXHAUST FAN THROUGH ROOF.
2. FANS MUST WEIGH LESS THAN 75 LBS.
3. LIGHTING FIXTURES MAY BE INSTALLED ROTATED 90° FROM SHOWN TO MATCH T-GRID LAYOUT.

SPLIT-SYSTEM HVAC SCHEDULE

MARK	DESCRIPTION	TONS	VOLT/PH	WEIGHT	MODEL
IDU 1	WALL MOUNTED INDOOR UNIT	1	208/230-1ø	19.2 LBS	CARRIER 40MAQB12B-3
ODU 1	OUTDOOR UNIT	3	208/230-1ø	170 LBS	CARRIER 38MGQC36-3

GENERAL NOTES

American Modular Systems
787 Spreckels Ave. Manteca, CA 95336
Phone (209) 825-1921 - Fax (209) 825-7018
americanmodular.com

MODULAR MANUFACTURER PROPRIETARY STATEMENT

THESE DRAWINGS AND THE MATERIAL CONTAINED THEREIN ARE THE PROPERTY OF AMERICAN MODULAR SYSTEMS, INC. (AMS) AND SHALL NOT BE REPRODUCED, COPIED OR OTHERWISE DISPOSED OF DIRECTLY OR INDIRECTLY AND SHALL NOT BE USED IN WHOLE OR IN PART TO ASSIST IN THE MAKING OF OR FOR THE PURPOSE OF FURNISHING ANY INFORMATION FOR THE MAKING OF DRAWINGS, PRINTS, APPARATUS OR PARTS THEREOF WITHOUT THE FULL KNOWLEDGE AND WRITTEN CONSENT OF AMS. ALL PATENTABLE MATERIAL CONTAINED HEREIN AND ORIGINATING WITH AMS SHALL BE THE SOLE PROPERTY OF AMS.

PRE-CHECKED SET NAME

24' x 40' THRU 120' x 40' BUILDINGS

SITE SPECIFIC PROJECT NAME

MARIN COMMUNITY CSD - INDIAN VALLEY CAMPUS (1) 24x40 BUILDING

SHEET TITLE

REFLECTED CEILING PLAN

MANUFACTURER PROFESSIONAL OF RECORD ON PC

LICENSED ARCHITECT TIMOTHY PATRICK CANNON No. C12631 Ren. 9-31-19 STATE OF CALIFORNIA

PROJECT SPECIFIC STATE AGENCY APPROVAL

STATE AGENCY APPROVAL

IDENTIFICATION STAMP DIV. OF THE STATE ARCHITECT 02 116495 AC TM FF BA SS JDS DATE 12-18-2017

BASED ON PC# 02-113876

PRE-CHECK (PC) DOCUMENT – CODE: 2013 CBC
A SEPARATE PROJECT APPLICATION FOR CONSTRUCTION IS REQUIRED

REVISIONS

1
2
3
4

DRAWN BY:	BA
SCALE:	AS NOTED
DATE:	11/10/17

SHEET NUMBER

M1.0

02-113876 - 24' x 40' - 120' x 40' FLOOR PLANS.DWG - 12/6/2017 1:03 PM PLOTTED: 12/6/2017 11:15 AM

NOT USED

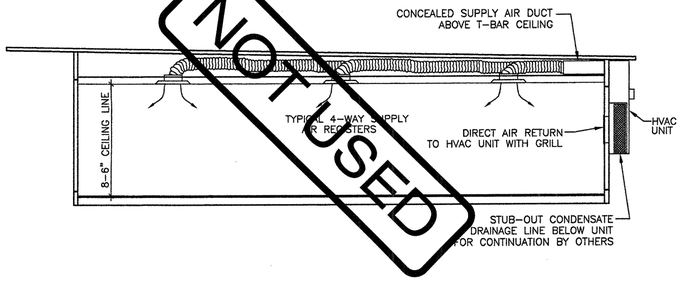

TYPICAL MECHANICAL DETAIL SECTION — 1

SCALE : 3/16" = 1'-0"

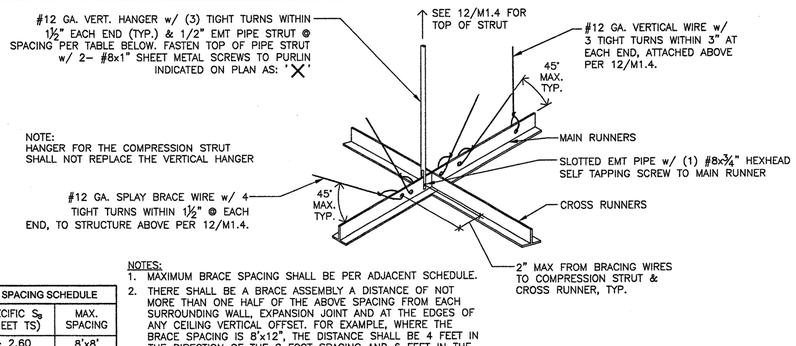

BRACE SPACING SCHEDULE	
SITE SPECIFIC S_s (PER SHEET TS)	MAX. SPACING
☐ $S_s \geq 2.60$	8'x8'
☐ $S_s < 2.60$	8'x12'

NOTES:
1. MAXIMUM BRACE SPACING SHALL BE PER ADJACENT SCHEDULE.
2. THERE SHALL BE A BRACE ASSEMBLY A DISTANCE OF NOT MORE THAN ONE HALF OF THE ABOVE SPACING FROM EACH SURROUNDING WALL, EXPANSION JOINT AND AT THE EDGES OF ANY CEILING VERTICAL OFFSET. FOR EXAMPLE, WHERE THE BRACE SPACING IS 8'x12", THE DISTANCE SHALL BE 4 FEET IN THE DIRECTION OF THE 8 FOOT SPACING AND 6 FEET IN THE DIRECTION OF THE 12 FOOT SPACING. FOR FURTHER INFORMATION REFER TO SPECIFICATIONS ON SHEET M1.7.

STRUT/SPLAY WIRE ASSEMBLY DETAIL — 3

SCALE : N.T.S

NOT USED

MAX WATER HEATER WEIGHT = 400 LBS

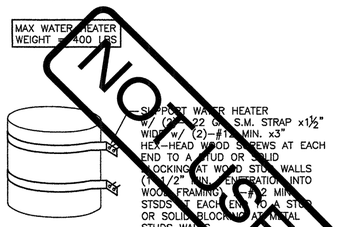

SUPPORT WATER HEATER W/ (2)#22 GA S.M. STRAP x1½" WIDE w/ (2)-#10 MIN. x3" HEX-HEAD WOOD SCREWS AT EACH END TO A STUD OR SOLID BLOCKING AT WOOD STUD WALLS (1½" MIN. PENETRATION INTO WOOD FRAMING.) (2)#12 MIN. STSDS AT EACH END TO A STUD OR SOLID BLOCKING AT METAL STUDS WALLS.

NOTE: PRESSURE RELIEF VALVE SHALL BE PLUMBED TO OUTSIDE/EXTERIOR OF BUILDING.

FLOOR MOUNTED WATER HEATER SUPPORT DETAIL — 6

SCALE : N.T.S

LIGHT FIXTURE ATTACHMENT DETAIL — 7

SCALE : N.T.S

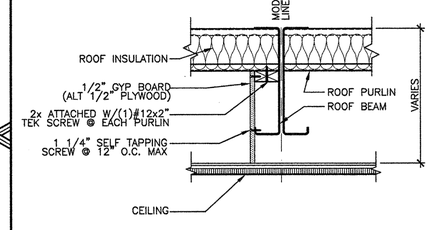

C.B.C. SECTION 718.4.3:
"DRAFTSTOPPING SHALL BE INSTALLED IN ATTICS AND CONCEALED ROOF SPACES, SUCH THAT ANY HORIZONTAL AREA DOES NOT EXCEED 3,000 SQUARE FEET."
NOTE EXCEPTION #2:
IN GROUP A, E, H, I, L OCCUPANCIES, WHERE AN AUTOMATIC SPRINKLER SYSTEM IN ACCORDANCE WITH SECTION 903.3.1.1 IS INSTALLED, THE AREA BETWEEN DRAFT STOPS MAY BE 9,000 SQUARE FEET AND THE GREATEST HORIZONTAL DISTANCE MAY BE 100 FEET.

DRAFT STOP DETAIL — 8

SCALE : 1 1/2" = 1'-0"

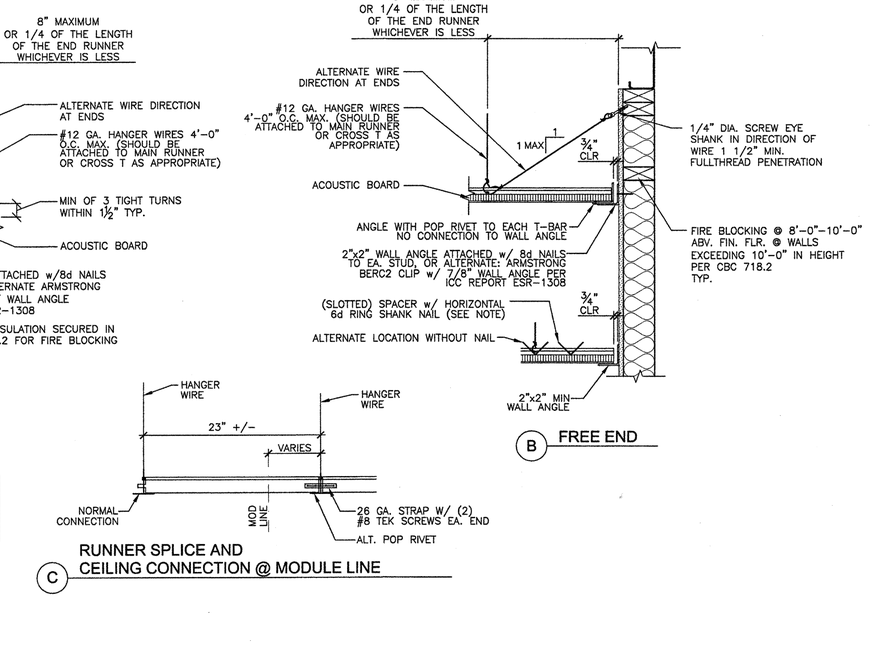

NOT USED

MAX HVAC UNIT WEIGHT = 600 LBS

(1) ¼"ø MIN. x3" LS TO EXTERIOR WALL STUDS OR BLKG AT WOOD STUD WALLS. MIN. 1½" PENETRATION INTO WOOD FRAMING
(1) #12 STSDS TO EXTERIOR WALL STUDS OR BLKG AT METAL STUD WALLS
(2) #12-1" STSDS TO HVAC
16 GA. BRACKET SUPPLIED BY MANUFACTURER
ALTERNATE (1) ¼"ø MIN. x3" LS AT WOOD STUD WALLS OR (1) #12 STSDS AT METAL STUD WALLS @ EACH SIDE TO EACH WALL

INTERIOR HVAC ANCHORAGE — 9

SCALE : N.T.S

NOT USED

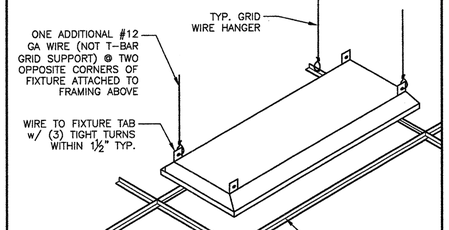

WALL MOUNT HVAC ANCHORAGE — 10

SCALE : N.T.S

NOT USED

ROOF CURB ELEVATION-OPTIONAL — 11

SCALE : N.T.S

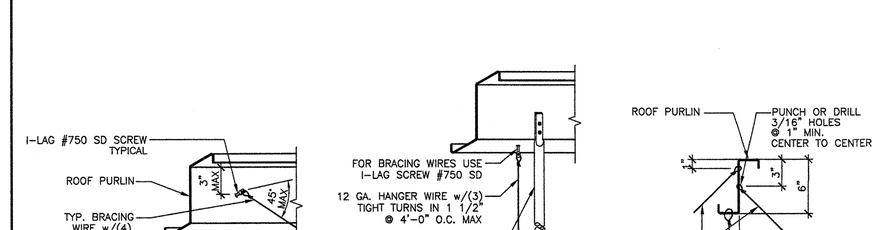

CONNECTION TO PURLINS DETAIL — 12

SCALE : 1 1/2" = 1'-0"

American Modular Systems
787 Spreckels Ave. Manteca, CA 95336
Phone (209) 825-1921 - Fax (209) 825-7018
americanmodular.com

MODULAR MANUFACTURER PROPRIETARY STATEMENT
THESE DRAWINGS AND THE MATERIAL CONTAINED THEREIN ARE THE PROPERTY OF AMERICAN MODULAR SYSTEMS, INC. (AMS) AND SHALL NOT BE REPRODUCED, COPIED OR OTHERWISE DISPOSED OF DIRECTLY OR INDIRECTLY AND SHALL NOT BE USED IN WHOLE OR IN PART TO ASSIST IN THE MAKING OF OR FOR THE PURPOSE OF FURNISHING ANY INFORMATION FOR THE MAKING OF DRAWINGS, PRINTS, APPARATUS OR PARTS THEREOF WITHOUT THE FULL KNOWLEDGE AND WRITTEN CONSENT OF AMS. ALL PATENTABLE MATERIAL CONTAINED HEREIN AND ORIGINATING WITH AMS SHALL BE THE SOLE PROPERTY OF AMS.

PRE-CHECKED SET NAME

24' x 40' THRU 120' x 40' BUILDINGS

SITE SPECIFIC PROJECT NAME

SHEET TITLE

MECHANICAL BUILDING SECTIONS & CEILING DETAILS

MANUFACTURER PROFESSIONAL OF RECORD ON PC

LICENSED ARCHITECT BARRY PATRICK CUNNINGHAM No. C12631 Ren. 08-31-17 STATE OF CALIFORNIA

PROJECT SPECIFIC STATE AGENCY APPROVAL

Rev 1
APPROVED
DIV. OF THE STATE ARCHITECT
SACRAMENTO REGIONAL OFFICE
AC ___ F/LS ___ SS
APP. # 113876 DATE 7-5-16

ORIGINAL PC STATE AGENCY APPROVAL

IDENTIFICATION STAMP
DIV. OF THE STATE ARCHITECT
CA. DEPT. OF GENERAL SERVICES
PC 02-113876
AC ___ FLS ___ SS ___
DATE ___

PRE-CHECK (PC) DOCUMENT - CODE: 2013 CBC
A SEPARATE PROJECT APPLICATION FOR CONSTRUCTION IS REQUIRED

REVISIONS
1 05/17/2016 - PC REVISION
2
3
4

DRAWN BY:
SCALE: AS NOTED
DATE:

SHEET NUMBER

M1.4

IDENTIFICATION STAMP
DIV. OF THE STATE ARCHITECT
02 113876
AC TM FLS SS
DATE 12-12-2017

02-113876 - 24' x 40' - 120' x 40' EXPOSED STEEL SWSD 5/19/2016 1:38 PM PLOTTED 6/10/2016 10:19 AM

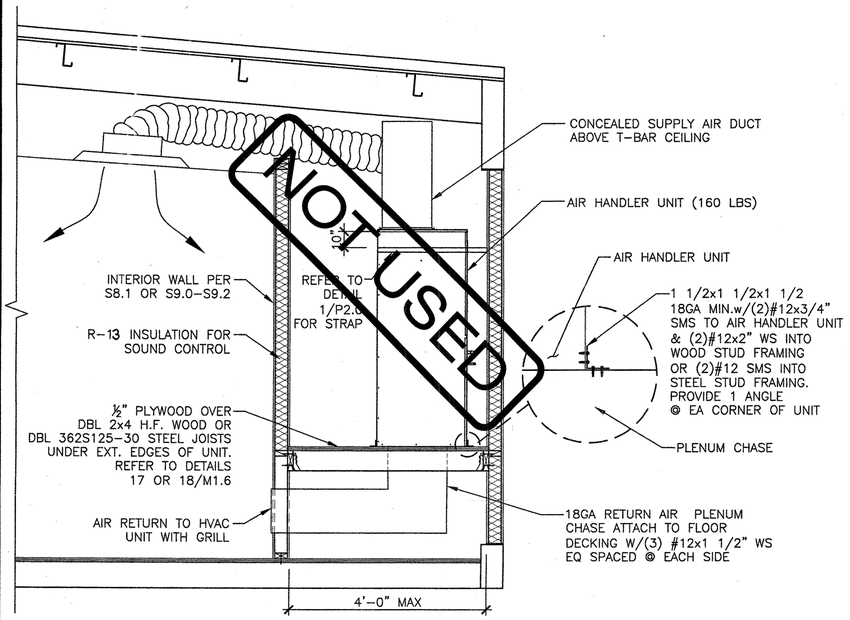

SPLIT SYSTEM CROSS SECTION — SCALE: N.T.S. — 1

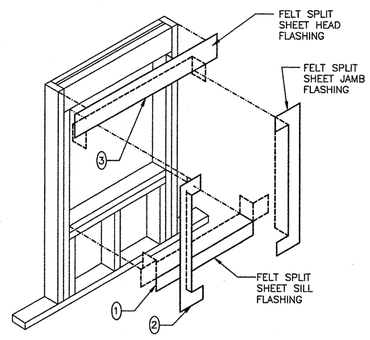

WINDOW CONDITION

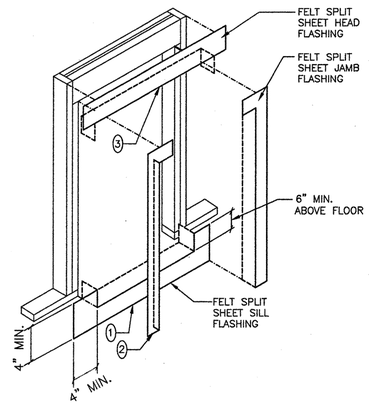

DOOR CONDITION

(#) = SEQUENCE OF ORDER

GAS CONNECTION DETAIL — SCALE: N.T.S. — 2

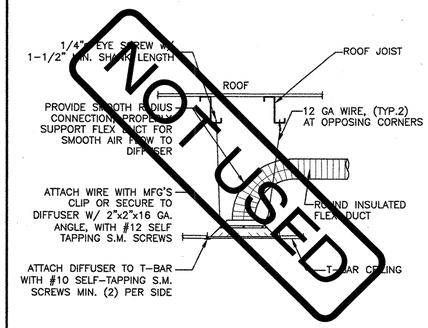

SUPPLY - RETURN DIFFUSER MOUNTING DETAIL — SCALE: N.T.S. — 7

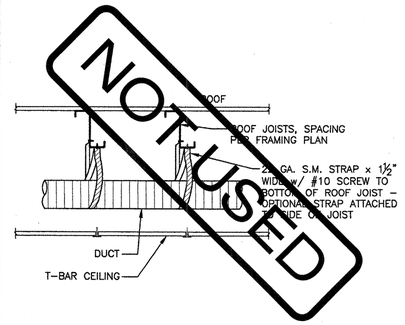

FLEX DUCTING SUPPORT DETAIL — SCALE: N.T.S. — 8

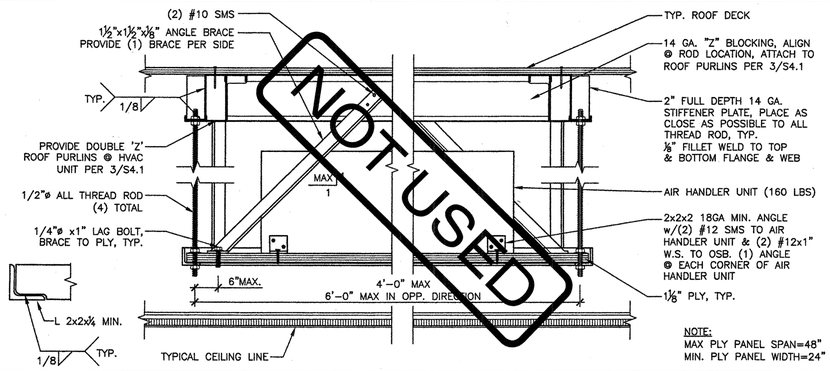

HVAC ATTIC MOUNTED SPLIT SYSTEM — SCALE: N.T.S. — 3

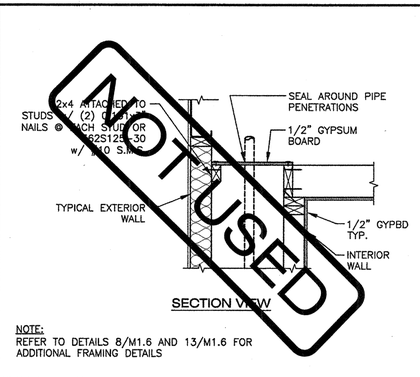

DRAFT STOP DETAIL @ PLUMBING CHASE — SCALE: N.T.S. — 4

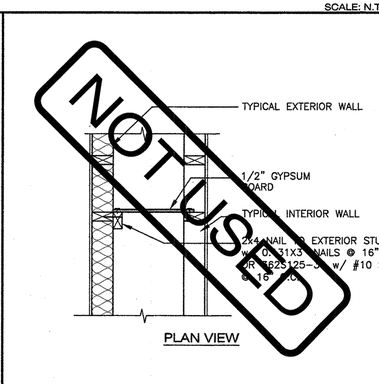

DRAFT STOP DETAIL @ PLUMBING CHASE — SCALE: N.T.S. — 5

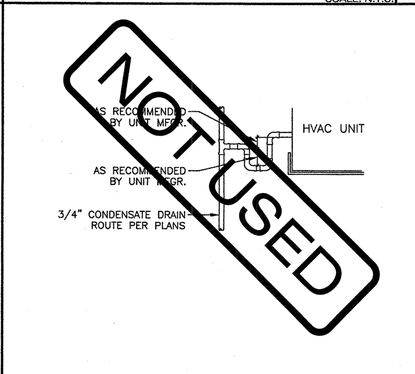

CONDENSATE DETAIL — SCALE: N.T.S. — 9

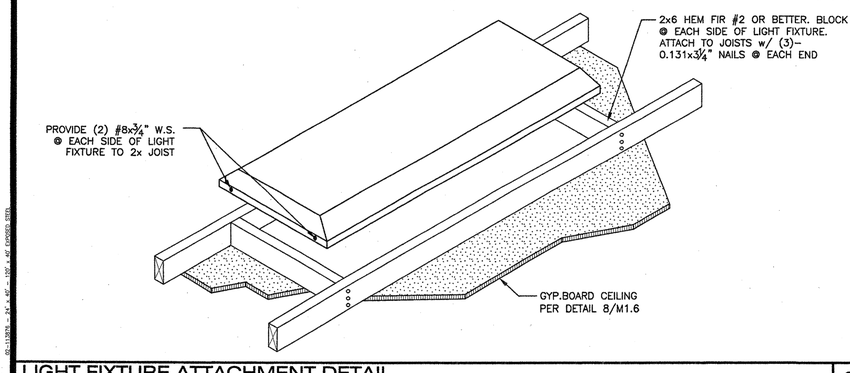

LIGHT FIXTURE ATTACHMENT DETAIL GYPSUM BOARD CEILING OPTION — SCALE: N.T.S. — 6

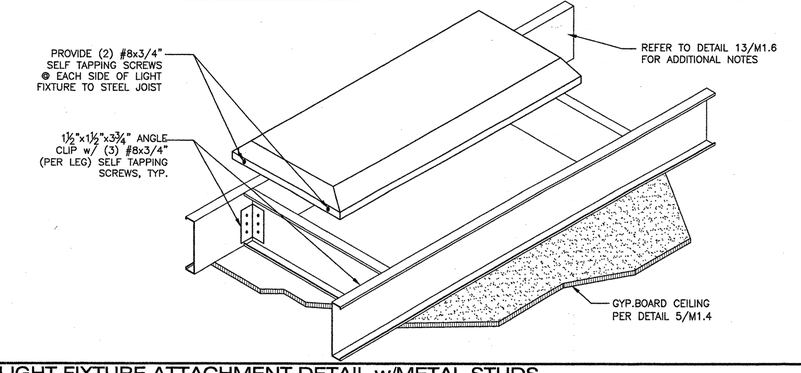

LIGHT FIXTURE ATTACHMENT DETAIL w/METAL STUDS GYPSUM BOARD CEILING OPTION — SCALE: N.T.S. — 6A

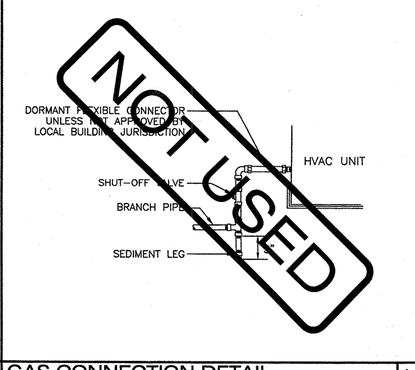

GAS CONNECTION DETAIL — SCALE: N.T.S. — 10

American Modular Systems
787 Spreckels Ave. Manteca, CA 95336
Phone (209) 825-1921 - Fax (209) 825-7018
americanmodular.com

MODULAR MANUFACTURER PROPRIETARY STATEMENT

THESE DRAWINGS AND THE MATERIAL CONTAINED THEREIN ARE THE PROPERTY OF AMERICAN MODULAR SYSTEMS, INC. (AMS) AND SHALL NOT BE REPRODUCED, COPIED OR OTHERWISE DISPOSED OF DIRECTLY OR INDIRECTLY AND SHALL NOT BE USED IN WHOLE OR IN PART TO ASSIST IN THE MAKING OF OR FOR THE PURPOSE OF FURNISHING ANY INFORMATION FOR THE MAKING OF DRAWINGS, PRINTS, APPARATUS OR PARTS THEREOF WITHOUT THE FULL KNOWLEDGE AND WRITTEN CONSENT OF AMS. ALL PATENTABLE MATERIAL CONTAINED HEREIN AND ORIGINATING WITH AMS SHALL BE THE SOLE PROPERTY OF AMS.

PRE-CHECKED SET NAME

24' x 40' THRU 120' x 40' BUILDINGS

SITE SPECIFIC PROJECT NAME

SHEET TITLE

CEILING & MECHANICAL DETAILS

MANUFACTURER PROFESSIONAL OF RECORD ON PC

LICENSED ARCHITECT — TIMOTHY PATRICK CUNNINGHAM — No. C12631 Ren. 03-31-17 — STATE OF CALIFORNIA

PROJECT SPECIFIC STATE AGENCY APPROVAL

IDENTIFICATION STAMP DIV. OF THE STATE ARCHITECT
02 II 64 95
AC — FIELD OS by
DATE 12-12-2017

ORIGINAL PC STATE AGENCY APPROVAL

IDENTIFICATION STAMP DIV. OF THE STATE ARCHITECT CA. DEPT. OF GENERAL SERVICES
PC 02-113876
AC — FIELD OS by
DATE 6/22/15

PRE-CHECK (PC) DOCUMENT – CODE: 2013 CBC
A SEPARATE PROJECT APPLICATION FOR CONSTRUCTION IS REQUIRED

REVISIONS

DRAWN BY:	
SCALE:	AS NOTED
DATE:	

SHEET NUMBER

M1.5

05-113876 - 24' x 40' - 24' x 40' (GENERIC) (STD)

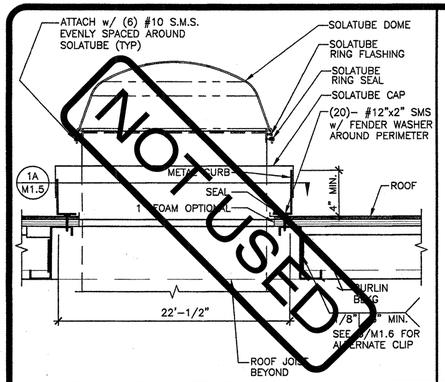

SOLATUBE ATTACHMENT DETAIL — SCALE : 1-1/2" = 1'-0" — 1

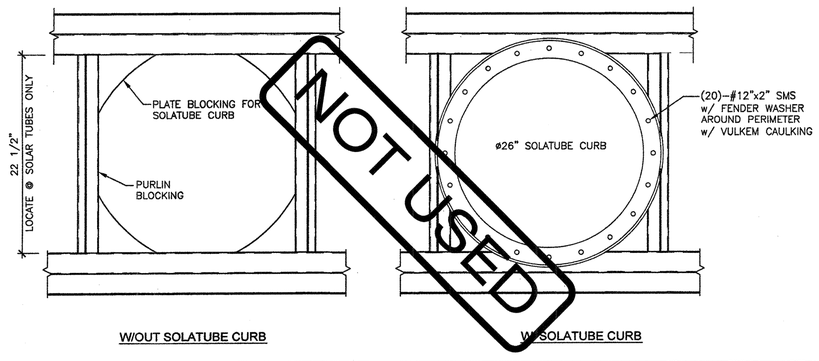

SOLATUBE CURB ATTACHMENT DETAIL — SCALE : 1 1/2" = 1'-0" — 1A

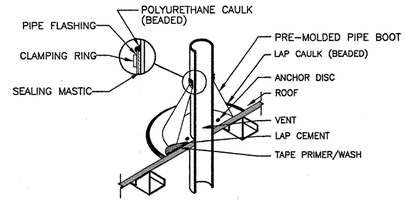

VENT THRU ROOF PENETRATION DETAIL — N.T.S — 2

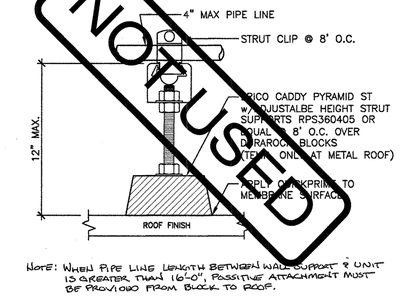

HOPE: WHEN PIPE LINE LENGTH BETWEEN WALL SUPPORT & UNIT IS GREATER THAN 16'-0", POSITIVE ATTACHMENT MUST BE PROVIDED FROM BLOCK TO ROOF.

CONDENSATE / GAS — N.T.S — 3

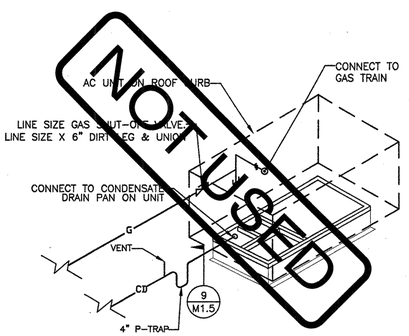

HVAC UNIT PIPING — N.T.S — 4

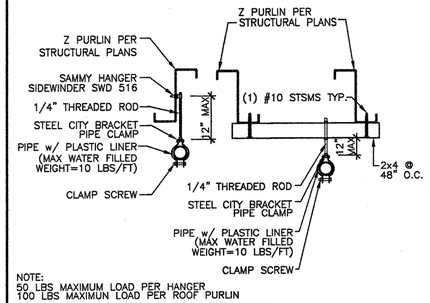

PIPING DETAIL — SCALE : 1 1/2" = 1'-0" — 5

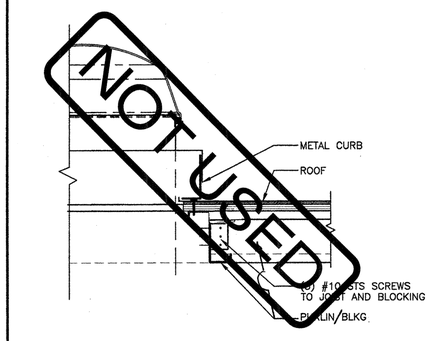

SOLATUBE SECTION (ALT. CLIP) — SCALE : 1 1/2" = 1'-0" — 6

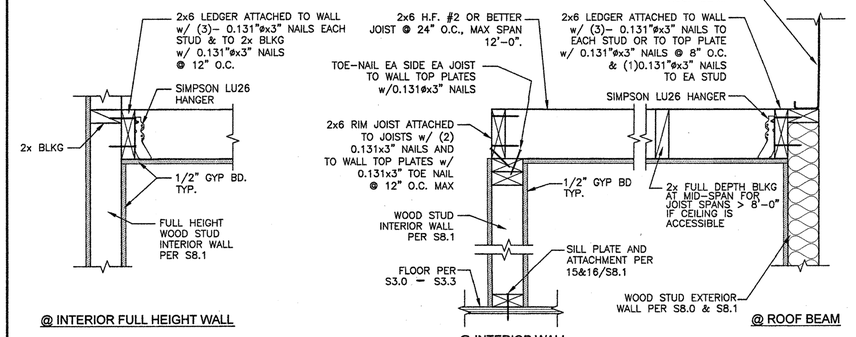

GYPSUM BOARD CEILING DETAIL - OPTIONAL — SCALE : 1 1/2" = 1'-0" — 8

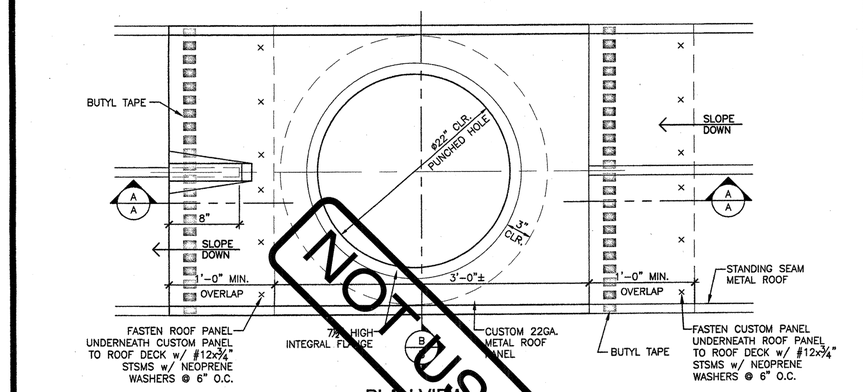

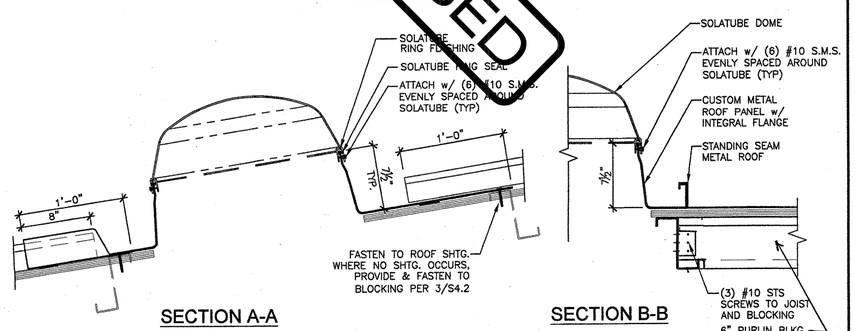

OPTIONAL SOLATUBE DETAILS — SCALE : 1 1/2" = 1'-0" — 15

NOT USED — 11

NOT USED — 16

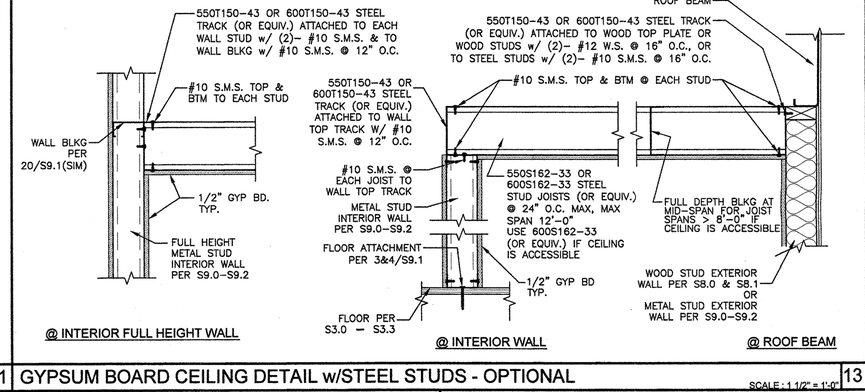

GYPSUM BOARD CEILING DETAIL w/STEEL STUDS - OPTIONAL — SCALE : 1 1/2" = 1'-0" — 13

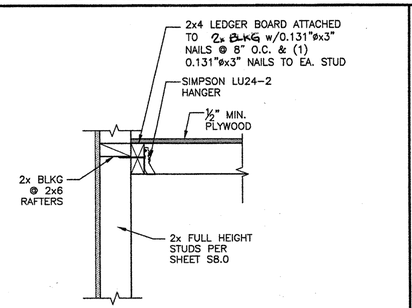

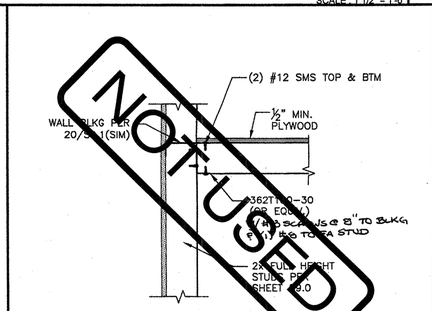

DETAIL w/ WOOD STUD - OPTION — 17

DETAIL w/ STEEL STUD - OPTION — 18

AMS
American Modular Systems
787 Spreckels Ave. Manteca, CA 95336
Phone (209) 825-1921 - Fax (209) 825-7018
americanmodular.com

MODULAR MANUFACTURER PROPRIETARY STATEMENT

THESE DRAWINGS AND THE MATERIAL CONTAINED THEREIN ARE THE PROPERTY OF AMERICAN MODULAR SYSTEMS, INC. (AMS) AND SHALL NOT BE REPRODUCED, COPIED OR OTHERWISE DISPOSED OF DIRECTLY OR INDIRECTLY AND SHALL NOT BE USED IN WHOLE OR IN PART TO ASSIST IN THE MAKING OF OR FOR THE PURPOSE OF FURNISHING ANY INFORMATION FOR THE MAKING OF DRAWINGS, PRINTS, APPARATUS OR PARTS THEREOF WITHOUT THE FULL KNOWLEDGE AND WRITTEN CONSENT OF AMS. ALL PATENTABLE MATERIAL CONTAINED HEREIN AND ORIGINATING WITH AMS SHALL BE THE SOLE PROPERTY OF AMS.

PRE–CHECKED SET NAME

24' x 40' THRU 120' x 40' BUILDINGS

SITE SPECIFIC PROJECT NAME

SHEET TITLE

MECHANICAL ROOF DETAILS

MANUFACTURER PROFESSIONAL OF RECORD ON PC

LICENSED ARCHITECT — RANDALL PATRICK CASHMAN — No. C12631 — Ren. 03-31-17 — STATE OF CALIFORNIA

PROJECT SPECIFIC STATE AGENCY APPROVAL

IDENTIFICATION STAMP DIV. OF THE STATE ARCHITECT
02 116485
AC TM FS SS SDV
DATE 12-18-2017

ORIGINAL PC STATE AGENCY APPROVAL

IDENTIFICATION STAMP DIV. OF THE STATE ARCHITECT CA. DEPT. OF GENERAL SERVICES
PC 02-113876
AC — FS
DATE 6/22/15

PRE–CHECK (PC) DOCUMENT – CODE: 2013 CBC
A SEPARATE PROJECT APPLICATION FOR CONSTRUCTION IS REQUIRED

REVISIONS

1
2
3
4

DRAWN BY:

SCALE: AS NOTED

DATE:

SHEET NUMBER

M1.6

1. CEILING GRID SYSTEMS IN SEISMIC ZONES D, E, F, MUST BE RATED "HEAVY DUTY", AS DEFINED BY ASTM C635. PROVIDE GRID COMPONENTS AS SPECIFIED IN TABLE A BELOW, OR APPROVED EQUAL. GRID METAL FRAMING PIECES SHALL BE DESIGNED TO CARRY A MEAN ULTIMATE TEST LOAD OF NOT LESS THAN 180 LBS. IN COMPRESSION AND TENSION, PER ASTM E580.

2. SUSPENSION WIRE SHALL BE CLASS 1 ZINC-COATED (GALVANIZED) CARBON STEEL CONFORMING TO ASTM A641. WIRE SHALL BE #12 GAGE WITH SOFT TEMPER AND A MINIMUM TENSILE STRENGTH OF 70 KSI.

3. WHEN HANGER AND BRACING WIRES ARE ATTACHED TO CONCRETE ABOVE, TESTS PER D.S.A. IR 25-2.13 SECTION 6.8 MUST BE PERFORMED. POWER ACTUATED FASTENERS IN CONCRETE ARE NOT ALLOWED FOR BRACING WIRE.

4. 12 GA. (MINIMUM) HANGER WIRES MAY BE USED FOR UP TO AND INCLUDING 4'-0" x 4'-0 GRID SPACING, ATTACH TO MAIN RUNNER. SPLICES WILL NOT BE PERMITTED IN ANY HANGER WIRES UNLESS SPECIFICALLY APPROVED BY D.S.A.

5. PROVIDE 12 GA. HANGER WIRES WITHIN 8" OF THE ENDS OF ALL MAIN AND CROSS RUNNERS OR AT 1/4 OF THE LENGTH OF THE END TEE, WHICHEVER IS LESS, AT THE PERIMETER OF THE CEILING AREA.

6. PROVIDE TRAPEZE OR OTHER SUPPLEMENTARY SUPPORT MEMBERS AT OBSTRUCTIONS TO MAINTAIN HANGER SPACING. PROVIDE ADDITIONAL HANGERS, STRUTS OR BRACES AS REQUIRED AT ALL CEILING BREAKS, SOFFITS OR DISCONTINUOUS AREAS. HANGER WIRES THAT ARE MORE THAN 1:6 OUT OF PLUMB ARE TO HAVE COUNTER-BRACED WIRES.

7. CEILING GRID MEMBERS SHALL BE ATTACHED TO TWO (2) ADJACENT WALLS. CEILING GRID MEMBERS SHOULD BE AT LEAST 3/4 INCH CLEAR OF OTHER WALLS. IF WALLS RUN DIAGONALLY TO CEILING GRID SYSTEM RUNNERS, ONE END OF MAIN AND CROSS RUNNERS SHOULD BE FREE AND A MINIMUM OF 3/4 INCH CLEAR OF WALL.

8. PERIMETER SUPPORT ANGLES SHALL BE AT LEAST 2 INCHES WIDE, OR USE PROPRIETARY ANGLES & SEISMIC CLIPS THAT HAVE A VALID EVALUATION REPORT.

9. AT THE PERIMETER OF THE CEILING AREA WHERE MAIN OR CROSS RUNNERS ARE NOT CONNECTED TO THE ADJACENT WALL, PROVIDE INTERCONNECTION BETWEEN THE RUNNERS AT THE FREE END TO PREVENT LATERAL SPREADING. A METAL STRUT OR A 16 GA. WIRE WITH A POSITIVE MECHANICAL CONNECTION TO THE RUNNERS MAY BE USED. WHERE THE PERPENDICULAR DISTANCE FROM THE WALL TO THE FIRST PARALLEL RUNNERS IS 8" OR LESS, THIS INTERLOCK IS NOT REQUIRED.

10. CEILING AREAS EXCEEDING 2,500 SQUARE FEET SHALL HAVE A SEISMIC SEPARATION JOINT.

11. EXPANSION JOINTS SHALL BE PROVIDED AT INTERSECTIONS OF CORRIDORS, LOBBIES AND OTHER SIMILAR AREAS.

12. PENETRATIONS THROUGH THE CEILING, SUCH AS FIRE SPRINKLERS, SHALL HAVE A 2 INCH OVERSIZED RING, SLEEVE OR ADAPTER TO ALLOW FREE MOVEMENT INDEPENDENT OF THE CEILING. ALTERNATE: A FLEXIBLE SPRINKLER FITTING THAT ALLOWS 1 INCH OF MOVEMENT CAN BE USED.

13. LATERAL FORCE BRACING IS REQUIRED FOR ALL CEILINGS, EXCEPT CEILING AREAS OF 144 SQUARE FEET OR LESS WITH PERIMETER WALLS THAT ARE DESIGNED TO CARRY THE CEILING LATERAL FORCES. SPACING OF BRACING ASSEMBLIES MUST BE SHOWN ON THE PLANS.

14. LATERAL FORCE BRACING CONSISTS OF A SET OF 1 COMPRESSION STRUT AND FOUR #12 GA. SPLAYED BRACING WIRES, ORIENTED 90 DEGREES FROM EACH OTHER AT THE FOLLOWING SPACING:
(A) FOR SCHOOL BUILDINGS, PLACE SETS OF SPLAY WIRES AT A SPACING NOT MORE THAN 8' FEET BY 12 FEET ON CENTER.
(B) PROVIDE SPLAY WIRES AT LOCATIONS NOT MORE THAN 1/2 THE ABOVE SPACING FROM EACH PERIMETER WALL OR AT THE EDGE OF VERTICAL CEILING OFFSETS. THE SLOPE OF THESE WIRES SHOULD NOT EXCEED 45 DEGREES FROM THE PLANE OF THE CEILING AND SHOULD BE TAUT WITHOUT CAUSING THE CEILING TO LIFT. SPLICES IN BRACING WIRES ARE NOT PERMITTED WITHOUT SPECIAL D.S.A. APPROVAL.

15. COMPRESSION STRUTS SHALL BE ABLE TO RESIST THE VERTICAL PULL INDUCED BY BRACING WIRES, AND SHALL NOT BE MORE THAN 1:6 OUT OF PLUMB.

16. FASTEN HANGER WIRES WITH NOT LESS THAN 3 TIGHT TURNS WITHIN A DISTANCE OF 3 INCHES. FASTEN SPLAY WIRES WITH 4 TIGHT TURNS WITHIN A DISTANCE OF 1-1/2 INCHES. HANGER OR BRACING WIRE ANCHORS TO THE STRUCTURE SHOULD BE INSTALLED IN SUCH A MANNER THAT THE DIRECTION OF THE WIRE ALIGNS AS CLOSELY AS POSSIBLE WITH THE DIRECTION OF THE FORCES ACTING ON THE WIRE.

17. SEPARATE ALL CEILING HANGING AND BRACING WIRES AT LEAST 6 INCHES FROM ALL UNBRACED DUCTS, PIPES, CONDUIT ETC.

18. ATTACH ALL LIGHT FIXTURES AND AIR TERMINALS TO THE CEILING GRID RUNNERS WITH SCREWS OR APPROVED FASTENERS AS REQUIRED TO RESIST A HORIZONTAL FORCE EQUAL TO THE FIXTURES' WEIGHT. MINIMUM OF TWO ATTACHMENTS ARE REQUIRED AT EACH LIGHT FIXTURE.

19. FLUSH OR RECESSED LIGHT FIXTURES AND AIR TERMINALS WEIGHING LESS THAN 56 POUNDS MAY BE SUPPORTED DIRECTLY ON THE RUNNERS OF A HEAVY DUTY GRID SYSTEM, BUT THEY MUST HAVE A MINIMUM OF TWO #12 GA. SLACK SAFETY WIRES ATTACHED AT DIAGONAL CORNERS AND ANCHORED TO THE STRUCTURE ABOVE. FIXTURES WEIGHING LESS THAN 10 POUNDS MAY HAVE AT LEAST ONE #12 GA. SLACK SAFETY WIRE.

20. LIGHT FIXTURES AND OTHER CEILING DEVICES WEIGHING MORE THAN 56 POUNDS SHALL BE INDEPENDENTLY SUPPORTED BY NO LESS THAN FOUR (4) TAUT #12 GAGE WIRES, ATTACHED TO THE STRUCTURE ABOVE. WIRES MUST BE ABLE TO SUPPORT FOUR (4) TIMES THE WEIGHT OF THE UNIT.

21. ALL LIGHT-WEIGHT MISCELLANEOUS DEVICES, SUCH AS STROBE LIGHTS, SPEAKERS, ETC., SHALL BE ATTACHED TO THE CEILING GRID PER SECTION 7.3.1 OF D.S.A. IR 25-2.13. IN ADDITION, DEVICES WEIGHING MORE THAN 10 LBS SHALL HAVE A #12 SLACK SAFETY WIRE ANCHORED TO THE STRUCTURE ABOVE PER SECTION 7.2.2 OF D.S.A. IR 25-2.13. DEVICES WEIGHING MORE THAN 20 LBS. SHALL BE SUPPORTED FROM THE STRUCTURE ABOVE PER SECTION 7.3.4 OF D.S.A. IR 25-2.13.

22. PANELS THAT WEIGH MORE THAN 0.5 LBS/SQ.FT. (PSF), OTHER THAN MINERAL FIBER ACOUSTIC TILES, SHALL BE POSITIVELY ATTACHED TO CEILING SUSPENSION RUNNERS.

23. ACOUSTICAL PANELS SHALL BE 5/8" MINIMUM THICK, MINERAL FIBERBOARD OR VINYL-FACED FIBERGLASS, LAY-IN PANELS, SQUARE EDGE, ASTM FLAME SPREAD CLASS T, 24"x48" MODULAR SIZE, LIGHT REFLECTION 75% MINIMUM, NOISE REDUCTION COEFFICIENT OF 0.65 MINIMUM, MAXIMUM SMOKE DENSITY NOT TO EXCEED 450. FLAME SPREAD RATING MAXIMUM OF 200. PANELS ARE NOT ALLOWED TO SUPPORT ANY FIXTURE, TERMINAL OR DEVICE.

TABLE A - HEAVY DUTY GRID COMPONENTS

MANUFACTURER	MAIN TEE	H.D. 4' CROSS TEE	H.D. 2' CROSS TEE	RUNNER SPLICE DETAIL
DONN/USG	DX-26	DX-424	DX-216	N/A
ARMSTRONG	7301	XL7341	XL8320	N/A
CHICAGO/ROCKFON	200.01	1274.01	1202.01	N/A

NOTE: ALL GRID COMPONENTS SHALL BE BY THE SAME MANUFACTURER.

02-113876 - 24' x 40' - 120' x 40' EXPOSED STEEL SAVED: 5/21/2015 9:00 AM PLOTTED: 5/21/2015

METAL SUSPENSION SYSTEMS FOR LAY IN PANEL CEILING

BARD WALL HUNG

HVAC CFM CHART

MODEL #	DESCRIPTION	MAX. CFM	UNIT WEIGHT (LBS.)	EER	COP	CLIMATE ZONE(S)
S43H1-A	3-1/2 TON HEAT PUMP	1250	550	10.5	3.2	1-16
S49H1-A	4 TON HEAT PUMP	1400	550	10.0	3.0	1-16
S61H1-A	5 TON HEAT PUMP	1450	580	10.4	3.0	1-16

BARD Q-TEC

HVAC CFM CHART

MODEL #	DESCRIPTION	MAX. CFM	UNIT WEIGHT (LBS.)	EER	COP	CLIMATE ZONE(S)
Q42H2-4	3-1/2 TON HEAT PUMP	1200	570	9.0	3.0	1-16
Q48H2-4	4 TON HEAT PUMP	1400	600	9.0	3.0	1-16
Q60H2-A	5 TON HEAT PUMP	1550	600	9.0	3.0	1-16

CARRIER ROOF MOUNT

HVAC CFM CHART

MODEL #	DESCRIPTION	MAX. CFM	UNIT WEIGHT (LBS.)	SEER		CLIMATE ZONE(S)
50VT-A42	3-1/2 TON HEAT PUMP	1400	472	14		1-16
50VT-A48	4 TON HEAT PUMP	1600	460	14		1-16
50VT-A60	5 TON HEAT PUMP	1750	515	14		1-16

CARRIER SPLIT DX SYSTEM

HVAC CFM CHART

MODEL #	DESCRIPTION	AIR HANDLER MODEL #	MAX. CFM	AIR HANDLER UNIT WEIGHT (LBS.)	EXTERIOR UNIT WEIGHT (LBS.)	SEER	CLIMATE ZONE(S)
25HBB4-42	3-1/2 TON HEAT PUMP	FX4CN0420	3810	170	246	14	1-16
25HBB4-48	4 TON HEAT PUMP	FX4CN0480	4046	170	240	14	1-16
25HBB4-60	5 TON HEAT PUMP	FX4CN0600	4046	198	279	14	1-16

HVAC SCHEDULE

BUILDING SIZE	# OF HVAC		
	3½ TON HVAC	4 TON HVAC	5 TON HVAC
☐ 24' x 40'	1		
☐ 36' x 40'		1	
☐ 48' x 40'	2		
☐ 60' x 40'		2	
☐ 72' x 40'	3		2
☐ 84' x 40'		3	
☐ 96' x 40'	4		3
☐ 108' x 40'		4	
☐ 120' x 40'	5		

INSULATION SCHEDULE

ZONE	WALL	ROOFS		FLOORS (NON-CONCRETE)	CONCRETE FLOORS
		BATTS	OTHER		
1-14, & 15	*R -13	**R -19	***R -1	R -13	–
16	*R -13	**R -19	***R -1	R -13	–

*R-5 RIGID INSULATION TO BE USED OVER METAL FRAMED WALLS

**R-19 w/ 22 GA WIRE @ 16" O.C.

***R-1 MAY BE ACHEIVED w/ POLYSTYRENE OR INSULATION TAPE APPLIED TO TOP FLANGE OF PURLINS, OR EQUAL.

HVAC SCHEDULES

HEATING VENTILATING AND AIR CONDITIONING (HVAC)

1. HEAT PUMP: SINGLE PACKAGE WALL-MOUNTED AIR-TO-AIR ELECTRIC HEAT PUMP UNIT SHALL BE RATED IN ACCORDANCE WITH A.R.I. STANDARD 240-77. MAXIMUM AC SIZE FOR THIS BUILDING WILL BE A 5-TON UNIT. ALL UNITS SHALL BE 230/208 VOLT, 1 PHASE SYSTEM, UL TESTED & APPROVED OR COMPARABLE, AND MEET CURRENT ENERGY STANDARDS.
   A. THE SYSTEM SHALL MAINTAIN AN AUTOMATICALLY CONTROLLED INDOOR CLASSROOM TEMPERATURE OF 78 DEGREES F. WHEN THE OUTDOOR DRY BULB TEMPERATURE VARIES BETWEEN 100 DEGREES F. IN THE SUMMER.
   B. THE SYSTEM MUST MAINTAIN THE ABOVE TEMPERATURE WHEN THE DAMPER IS ADJUSTED TO USE APPROXIMATELY ONE-THIRD FRESH AIR.

2. DUCTWORK
   A. CONSTRUCT ALL DUCTWORK OF GALVANIZED SHEET METAL IN ACCORDANCE WITH C.M.C., ASHRAE GUIDE EQUIPMENT VOLUME, AND SMACNA LOW VELOCITY DUCT CONSTRUCTION MANUAL, LATEST EDITIONS. ALL DUCTWORK SHALL BE INSULATED WITH 1" THICK FIBERGLASS DUCT WRAP WITH VAPOR BARRIER. PROVIDE 1" DUCT ATTENUATION AT ALL DUCTWORK WITHIN 2'-0" OF HVAC UNIT.
   B. NON-METALLIC DUCTWORK OPTION: IN ACCESSIBLE CONCEALED PORTIONS OF DUCT SYSTEM, RIGID 1" FIBERGLASS OR INSULATED FLEX-DUCT WITH VAPOR BARRIER MAY BE SUBSTITUTED FOR SHEET METAL DUCTWORK. ALL DUCTWORK WITHIN 2'-0" OF THE HVAC UNIT AND ALL INTERFACE CONNECTIONS SHALL BE METAL. DUCTWORK AND REINFORCEMENT SHALL BE DESIGNED FOR 2" STATIC PRESSURE. REFERENCE BRANDS: OWENS-CORNING FIBERGLASS DUCTBOARD, 1" THICK, AND MICRO-AIRE TYPE 475. NON-METALLIC DUCTWORK SHALL CONFORM TO NFPA 90-A AND SMACNA CLASS 1 RATING.

3. AIR DUCT INSULATION AND LININGS SHALL COMPLY WITH FLAME SPREAD LESS THAN OR EQUAL TO 25, SMOKE GENERATION LESS THAN OR EQUAL TO 50.

4. SUPPLY AIR DIFFUSERS SHALL BE 675 CFM MAXIMUM, 12" ROUND. 1" FIBERGLASS OR FLEXDUCT DUCTWORK SPECIFICALLY DESIGNED TO PROVIDE AIR THERMAL COOLING SYSTEMS. 24"x8"x1" MICRO-AIRE TYPE #475 OWENS-CORNING, KNAUF, CERTAINTEED, OR EQUAL AND 90-B: UL #131 TEST, CLASS 1 RATING WITH "SMACNA".

5. REGISTERS AND DIFFUSERS: PROVIDE THREE (MINIMUM) 4-WAY THROW AIR DIFFUSERS AS MANUFACTURED BY CARNES, TITUS, HART AND COOLEY, METALAIRE, SHOEMAKER, BARBER-COLEMAN OR KRUEGER COMMERCIAL GRADE GRILLS AND REGISTERS.

6. AIR CONDITIONING CONTROLS: PROVIDE ELECTRONIC PROGRAMMABLE THERMOSTAT. THERMOSTAT SHALL HAVE THE FOLLOWING FUNCTIONS:
   A. 5 AND 2 WEEKDAY/WEEKEND PROGRAMMING DAYS WITH 4 SEPARATE TIME/TEMPERATURE SETTINGS FOR A 24-HOUR PERIOD.
   B. KEY BOARD LOCKOUT SWITCH.
   C. PROGRAMMABLE DISPLAY.
   D. 2-HOUR OVERRIDE MINIMUM.
   E. STATUS INDICATED LED'S.
   F. BATTERY BACK-UP.
   G. PROVIDE LOCKING CLEAR THERMOSTAT COVER WITH THERMOSTAT COVER WITH ACCESS HOLE FOR PROGRAM OVERRIDE. WHITE RODGERS IF92-371. MOUNT TOP OF BOX @ 48" A.F.F. MAX (WHERE SEALED, SETTINGS & ADJUSTMENTS CAN BE DONE BY SERVICE PERSONNEL ONLY).

7. THERMAL INSULATION
   A. ROOF INSULATION: R-19 WITH 22 GA. WIRE @ 16" O.C. & R-1 TOP OF PURLINS.
   B. WALLS INSULATION: R-13 KRAFT FACED. (R-5 INSULATION OVER METAL FRAMED WALLS)
   C. NON-CONCRETE FLOORS INSULATION: R-13
   D. CONCRETE FLOORS INSULATION: N/A
   E. FLAME SPREAD AND SMOKE DEVELOPMENT SHALL CONFORM TO CALIFORNIA BUILDING CODE SEC. 720.

8. FACTORY-MADE AIR DUCTS
   A. FACTORY-MADE AIR DUCTS SHALL BE APPROVED FOR THE USE INTENDED OR SHALL CONFORM TO THE REQUIREMENTS OF C.M.C. SECTION 601.0.
   B. EACH PORTION OF A FACTORY-MADE AIR DUCT SYSTEM SHALL BE IDENTIFIED BY THE MANUFACTURER WITH A LABEL OR OTHER SUITABLE IDENTIFICATION INDICATING COMPLIANCE WITH C.M.C. SECTION 601.0 AND ITS CLASS DESIGNATION. THESE DUCTS SHALL BE LISTED AND SHALL BE INSTALLED IN ACCORDANCE WITH THE TERMS OF THEIR LISTING AND THE REQUIREMENTS OF C.M.C. SECTION 601.0.
   C. DUCT SUPPORT FLEX DUCT TO BE SUPPORTED WITH 1-1/2" WIDE x26 GA. GALV. STRAP @ MAX 6'-0" O.C. ATTACH TO RAFTER WITH TWO #8 S.M.S. @ EACH END.
   D. SUPPLY AIR PLENUM TO BE SUPPORTED WITH 1-1/2" WIDE x26 GA. GALV. STRAPS MINIMUM 2 PER PLENUM.
   E. SUPPLY AIR BOX AND DIFFUSERS TO BE SUPPORTED WITH (2) 12 GA. HANGER WIRES TO BOX @ OPPOSITE CORNERS.
   F. SUPPLY AIR BOX AND DIFFUSERS TO BE BRACED WITH (2) 12 GA. SLACK WIRES TO BOX @ OPPOSITE CORNERS. ATTACH SUPPLY AIR DIFFUSERS TO CEILING GRID TO RESIST A LATERAL LOAD EQUAL TO THE WEIGHT OF THE DIFFUSER AND SUPPLY AIR BOX WITH TWO #8 S.M.S.

9. FIREBLOCKING SHALL BE PROVIDED IN THE FOLLOWING LOCATIONS:
   A. IN CONCEALED SPACES OF STUD WALLS AND PARTITIONS, INCLUDING FURRED SPACES;
   B. AT THE CEILING AND FLOOR LEVELS;
   C. AND AT 10-FOOT (3048mm) INTERVALS BOTH VERTICAL AND HORIZONTAL.
   REFERENCE 2013 CBC SECTION 718.

10. THE INTERIOR ENVIRONMENT SHALL BE ASSEMBLED WITH PRODUCTS THAT CONTRIBUTE TO A HEALTHY INDOOR AIR QUALITY (IAQ). THE FOLLOWING SHALL COMPLY TITLE 24, PART 11 ("CAL-GREEN"):

A. ADHESIVES, SEALANTS, CAULKS SECTION 5.504.4.1
B. PAINTS, COATINGS SECTION 5.504.4.3
C. AEROSOL PAINTS & COATINGS SECTION 5.504.4.3.1
D. CARPET SYSTEMS SECTION 5.504.4.4
   A. CARPET SHALL MEET CRI'S "GREEN LABEL PLUS" PROGRAM, NSF/ANSI '140 GOLD' LEVEL, OR OTHER APPROVED TESTING PER 5.504.4.4.
E. CARPET CUSHION OR PADSECTION 5.504.4.4.1
   A. CUSHION/PAD SHALL MEET THE CRI'S "GREEN LABEL" PROGRAM.
F. COMPOSITE WOOD PRODUCTS SECTION 5.504.4.5
   A. ALL COMPOSITE WOODS MUST NOT EXCEED THE FORMALDEHYDE LIMITS AS SPECIFIED IN ARB'S "AIR TOXICS CONTROL MEASURE" (17 CCR 93120), OR NON-EXEMPT MATERIALS PER TABLE 5.504.4.5.
G. RESILIENT FLOORING SYSTEMS SECTION 5.504.4.6
   A. RESILIENT FLOORING SHALL BE CERTIFIED UNDER THE "FLOORSCORE" PROGRAM BY RFCI, COMPLY WITH CA-CHPS 01350, OR OTHER APPROVED TESTING PER 5.504.4.6.

HVAC NOTES

American Modular Systems
787 Spreckels Ave. Manteca, CA 95336
Phone (209) 825-1921 - Fax (209) 825-7018
americanmodular.com

MODULAR MANUFACTURER PROPRIETARY STATEMENT
THESE DRAWINGS AND THE MATERIAL CONTAINED THEREIN ARE THE PROPERTY OF AMERICAN MODULAR SYSTEMS, INC. (AMS) AND SHALL NOT BE REPRODUCED, COPIED OR OTHERWISE DISPOSED OF DIRECTLY OR INDIRECTLY AND SHALL NOT BE USED IN WHOLE OR IN PART TO ASSIST IN THE MAKING OF OR FOR THE PURPOSE OF FURNISHING ANY INFORMATION FOR THE MAKING OF DRAWINGS, PRINTS, APPARATUS OR PARTS THEREOF WITHOUT THE FULL KNOWLEDGE AND WRITTEN CONSENT OF AMS. ALL PATENTABLE MATERIAL CONTAINED HEREIN AND ORIGINATING WITH AMS SHALL BE THE SOLE PROPERTY OF AMS.

PRE-CHECKED SET NAME
24' x 40' THRU 120' x 40' BUILDINGS

SITE SPECIFIC PROJECT NAME

SHEET TITLE
CEILING & MECHANICAL NOTES, SCHEDULES

MANUFACTURER PROFESSIONAL OF RECORD ON PC
LICENSED ARCHITECT RANDALL PATRICK CAVANAGH No. C12631 Ren. 03-31-17 STATE OF CALIFORNIA
REGISTERED PROFESSIONAL ENGINEER D. FRENCH No. S3380 Exp:03/31/16 STRUCTURAL STATE OF CALIFORNIA
05/19/2015

PROJECT SPECIFIC STATE AGENCY APPROVAL
IDENTIFICATION STAMP DIV. OF THE STATE ARCHITECT
02 116495
AC TM FLS SS
DATE 12-18-2017

ORIGINAL PC STATE AGENCY APPROVAL
IDENTIFICATION STAMP DIV. OF THE STATE ARCHITECT CA. DEPT. OF GENERAL SERVICES
PC 02-113876
AC FLS SS
DATE 6/22/15

PRE-CHECK (PC) DOCUMENT – CODE: 2013 CBC
A SEPARATE PROJECT APPLICATION FOR CONSTRUCTION IS REQUIRED

REVISIONS
1
2
3
4

DRAWN BY:
SCALE: AS NOTED
DATE:
SHEET NUMBER
M1.7

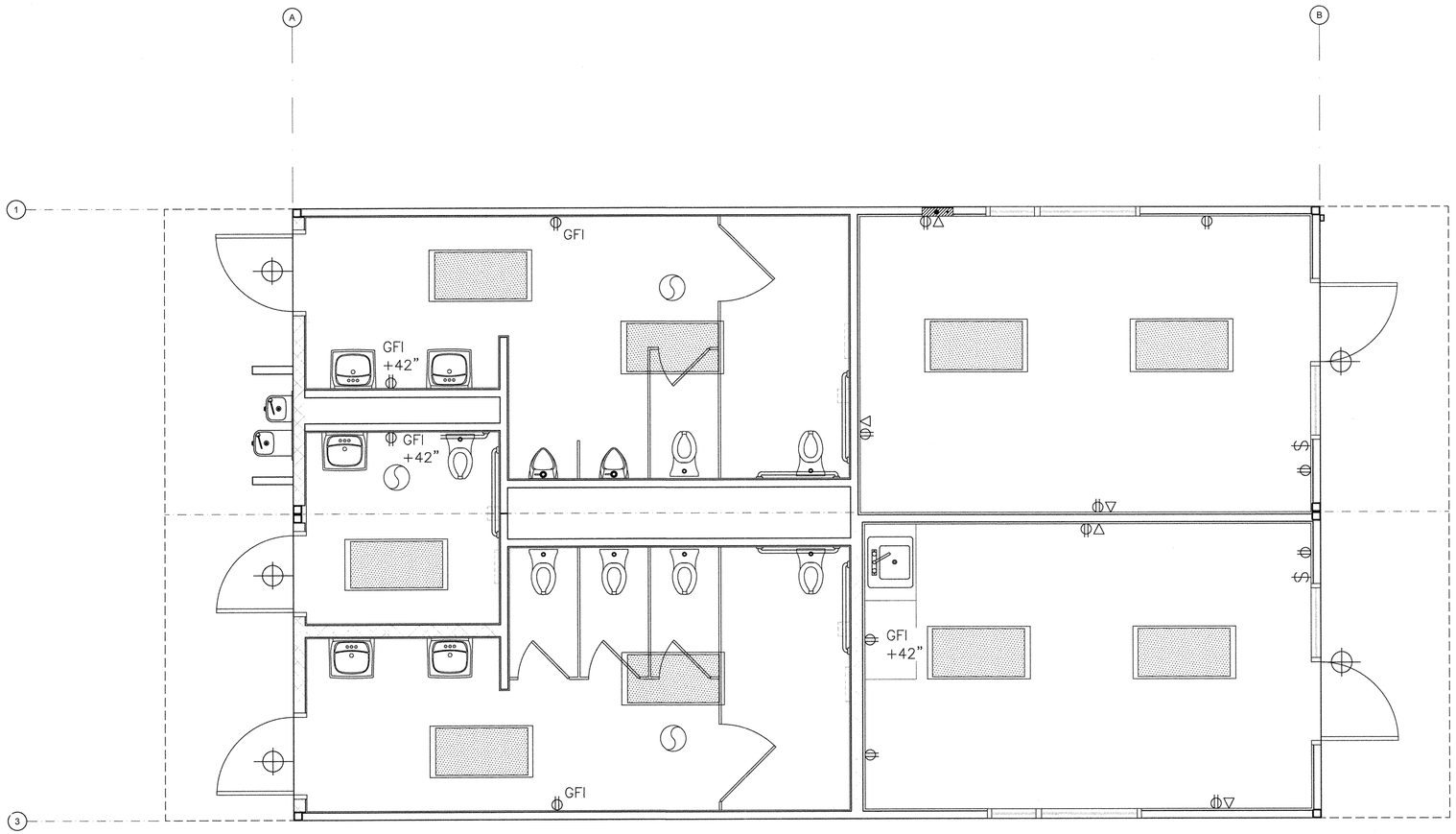

NOTE:
SEE AOR PLAN FOR FIRE ALARM

ELECTRICAL PLAN

SCALE: 3/8" = 1' - 0" | 1

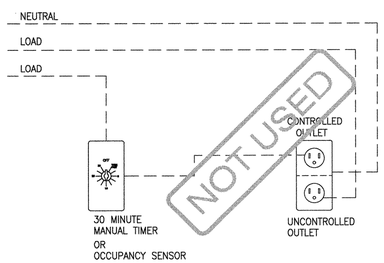

NOT USED | 2

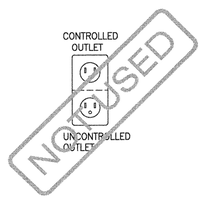

NOT USED | 3

GENERAL NOTES

NOTES

A. THE PROJECT ARCHITECT SHALL BE RESPONSIBLE FOR THE PLACEMENT OF HEAT, SMOKE DETECTORS, EVACS AND PULL STATIONS AND COMPLETE FIRE ALARM SYSTEM WHEN THE SITE SPECIFIC PROJECT IS REQUIRED TO MEET THE PROVISIONS OF SB 575 & CBC 907.2.3.

B. AT ANY SPACE REQUIRING 2 OR MORE EXITS PROVIDE EXIT SIGNS (CBC 1011) AND EMERGENCY EXIT ILLUMINATION (CBC 1006).

C. ANY MONITORING EQUIPMENT OR ASSOCIATED SENSORS ARE SITE SPECIFIC AND ARE NOT INCLUDED IN THIS BASE PC.

D. LIGHTING FIXTURES MAY BE INSTALLED ROTATED 90° FROM SHOWN TO MATCH T-BAR GRID LAYOUT.

1. F.A.: STUB-UP ALL FIRE ALARM JUNCTION BOXES TO ACCESSIBLE ATTIC SPACE WITH 1/2" MIN. GALV. THIN WALL TUBING (EMT). DO NOT CONNECT FIRE ALARM CONDUIT WITH ANY OTHER ELECTRICAL CONDUIT.
2. IF OPTIONAL DOOR OCCURS, A PULL STATION J-BOX AND EXIT SIGN ARE REQUIRED. PULL STATIONS ARE REQUIRED AT EVERY EXIT.
3. STUB OUT LOCATIONS FOR ELECTRICAL PANEL, FIRE ALARM, AND DATA BOXES SHOWN ARE DIAGRAMMATICAL ONLY. EXACT LOCATIONS MAY VARY +/- SEVERAL FEET. PLEASE CONTACT AMERICAN MODULAR SYSTEMS FOR EXACT LOCATIONS. POINT OF CONNECTION WILL BE AT FACE OF BUILDING.
4. SEE TYPICAL CLASSROOM LAYOUT FOR LOCATIONS OF ALL DEVICES. FIXTURE MOUNTING SHALL COMPLY WITH CALIFORNIA SEISMIC REGULATIONS.
5. THE LIGHTS FOR EACH ROOM OVER 250' SQ FT SHALL BE CONTROLLED BY ULTRASONIC OCCUPANCY SENSOR--WATT STOPPER W-500A, W-1000A, OR W-2000A (OR EQUAL) BASED ON THE ROOM SIZE, IN CONJUNCTION WITH BI-LEVEL SWITCHING.

ELECTRICAL SYMBOLS

- INCANDESCENT WALL MOUNTED INTERIOR LIGHT FIXTURE
- UNCONTROLLED-DUPLEX WALL CONVENIENCE OUTLET - MOUNT @ +18" A.F.F. TO CENTERLINE - U.O.N.
- CONTROLLED-DUPLEX WALL CONVENIENCE OUTLET - MOUNT @ +18" A.F.F. TO CENTERLINE - U.O.N. TO BE CONTROLLED BY OCCUPANCY SENSOR.
- COMBO-DUPLEX WALL CONVENIENCE OUTLET - MOUNT @ +18" A.F.F. TO CENTERLINE - U.O.N.
- FOURPLEX WALL OUTLET - MOUNT @ +18" A.F.F. TO CENTER LINE - U.O.N.
- W.P GFCI - WEATHER PROOF GROUND FAULT CIRCUIT INTERRUPT OUTLET - MOUNT @ 18" A.F.F. TO CENTERLINE - U.O.N.
- GFCI - GROUND FAULT CIRCUIT INTERRUPT OUTLET - MOUNT @ 18" A.F.F. TO CENTERLINE - U.O.N.
- $S - SINGLE POLE SOLA TUBE SWITCH - MOUNT @ +48" A.F.F. MAX TO TOP OF BOX.
- $ - CONTROLLED-SINGLE POLE LIGHT SWITCHES - MOUNT @ +48" A.F.F. MAX TO TOP OF BOX - HUBBELL PREMIUM, BRYANT HEAVY DUTY, OR LEVITON SPECIFICATIONS GRADE.
- J - ELECTRICAL CROSSOVER - J-BOXES - ABOVE CEILING - #1-4"X1", #22 4"X2"
- CLOCK / SPEAKER COMBO - MOUNT @ +90" A.F.F. TO CENTERLINE - U.O.N. - DEVICE BY OTHERS
- a - SWITCH SUBSCRIPTS - a=DEVICE CONTROLLED.
- J - JUNCTION BOX - SIZE / LOCATION A.F.F. / TYPE AS NOTED
- S - SPEAKER - OUTLET ONLY - 4" SQ. BOX WITH SINGLE DEVICE RING AND COVER - MOUNT @ +84" A.F.F. TO CENTERLINE - DEVICE BY OTHERS
- △ - DATA / COMMUNICATION - OUTLET ONLY - 4" SQ BOX WITH SINGLE DEVICE RING AND COVER - MOUNT @ +18" A.F.F. TO CENTERLINE, U.O.N., AND PROVIDE A 3/4" CONDUIT / STUBBED ABOVE CEILING - DEVICE BY OTHERS
- ▲ - INTERCOM / TELEPHONE - OUTLET ONLY - 4" SQ. BOX WITH SINGLE DEVICE RING AND COVER - MOUNT TOP OF BOX @ +48" A.F.F. U.O.N. AND PROVIDE A 3/4" CONDUIT / STUBBED ABOVE CEILING - DEVICE BY OTHERS
- (M)H - MOTION SENSOR OUTLET - PROVIDE (1) 4" SQ. BOX WITH SINGLE DEVICE RING AND COVER AND ONE 3/4" CONDUIT / STUBBED ABOVE CEILING
- S - SECURITY / INTRUSION KEY PAD - OUTLET ONLY - 4" SQ. BOX w/ SINGLE DEVICE RING AND COVER, MOUNT TOP OF BOX @ +48" A.F.F., AND ONE 3/4" CONDUIT / STUBBED ABOVE CEILING - DEVICE BY OTHERS
- DC - DOOR CONTACT - PROVIDE (1) EMPTY 1/2" DIA EMT THROUGH DOOR HEADER - STUBBED ABOVE CEILING - DEVICE BY OTHERS
- CATV △ - CATV OUTLET - OUTLET ONLY - PROVIDE (1) 4" SQ. BOX WITH SINGLE DEVICE RING AND COVER - (1) 3/4" DIA CONDUIT - STUBBED ABOVE CEILING - DEVICES BY OTHERS
- F - FIRE ALARM PULL STATION - OUTLET ONLY - PROVIDE (1) 4" SQ. BOX WITH SINGLE DEVICE RING AND COVER - TOP OF OPERATING HANDLE MOUNTED BETWEEN +42" TO +48" A.F.F. - DEVICE BY OTHERS
- FIRE ALARM HORN - OUTLET ONLY - 4" SQ. SINGLE GANG J-BOX WITH BLANK WEATHERPROOF COVER - MOUNTED +90" A.F.F. TO CENTERLINE - DEVICE BY OTHERS
- VISUAL FIRE ALARM ALARM - OUTLET ONLY - 4" SQ. BOX WITH SINGLE DEVICE RING AND COVER - MOUNT SO THAT LENS IS BETWEEN 80"-96" A.F.F. (CEILING MOUNT PER NFPA72 TABLE 6-4.4.1(b)) DEVICE BY OTHERS.
- M - MINI HORN BOX - OUTLET ONLY - SINGLE DEVICE RING AND COVER - MOUNTED +80" A.F.F. TO CENTERLINE BUT NO GREATER THAN +96" - DEVICE BY OTHERS
- T - THERMOSTAT - TOP OF BOX MOUNTED @ +48" A.F.F.
- ULTRASONIC OCCUPANCY SENSOR - MOUNTED TO FINISH CEILING
- ELECTRICAL PANEL - MOUNTED FLUSH WITH WALL FINISH U.O.N.
- 2'x4' LED DROP IN FIXTURE, MODEL: LITHONIA VTLED 4000K SP41 - 40 WATTS MAX (60 WATTS ALLOWABLE AT CZN 16) OR EQUAL
- 24 HOUR EMERGENCY LIGHTING WITH BATTERY BACK-UP - WHERE TWO OR MORE EXITS ARE REQUIRED
- E - EMERGENCY EXIT LIGHT - WHERE TWO OR MORE EXITS ARE REQUIRED
- INCANDESCENT EXTERIOR LIGHT FIXTURE @ EACH DOOR

AMS® American Modular Systems
787 Spreckels Ave. Manteca, CA 95336
Phone (209) 825-1921 - Fax (209) 825-7018
americanmodular.com

MODULAR MANUFACTURER PROPRIETARY STATEMENT

THESE DRAWINGS AND THE MATERIAL CONTAINED THEREIN ARE THE PROPERTY OF AMERICAN MODULAR SYSTEMS, INC. (AMS) AND SHALL NOT BE REPRODUCED, COPIED OR OTHERWISE DISPOSED OF DIRECTLY OR INDIRECTLY AND SHALL NOT BE USED IN WHOLE OR IN PART TO ASSIST IN THE MAKING OF OR FOR THE PURPOSE OF FURNISHING ANY INFORMATION FOR THE MAKING OF DRAWINGS, PRINTS, APPARATUS OR PARTS THEREOF WITHOUT THE FULL KNOWLEDGE AND WRITTEN CONSENT OF AMS. ALL PATENTABLE MATERIAL CONTAINED HEREIN AND ORIGINATING WITH AMS SHALL BE THE SOLE PROPERTY OF AMS.

PRE-CHECKED SET NAME

24' x 40' THRU 120' x 40' BUILDINGS

SITE SPECIFIC PROJECT NAME

MARIN COMMUNITY CSD - INDIAN VALLEY CAMPUS (1) 24x40 BUILDING

SHEET TITLE

TYPICAL ELECTRICAL PLAN

MANUFACTURER PROFESSIONAL OF RECORD ON PC

LICENSED ARCHITECT PATRICK J. KAVANAGH No. C12631 Ren. 3-31-19 STATE OF CALIFORNIA

REGISTERED PROFESSIONAL ENGINEER MANNY D. FRISON No. S3380 Exp:03/31/16 STATE OF CALIFORNIA

PROJECT SPECIFIC STATE AGENCY APPROVAL

, STATE AGENCY APPROVAL

IDENTIFICATION STAMP DIV. OF THE STATE ARCHITECT 02 116485 AC TM ELEC SS BY DATE 12-18-2017

BASED ON PC# 02-113876

PRE-CHECK (PC) DOCUMENT - CODE: 2013 CBC
A SEPARATE PROJECT APPLICATION FOR CONSTRUCTION IS REQUIRED

REVISIONS

DRAWN BY:	BA
SCALE:	AS NOTED
DATE:	11/10/17

SHEET NUMBER

E1.0

02-113876 - 24' x 40' x 10' 4 40' EXPOSED STEEL SHEET 12/8/2017 9:05 AM PLOTTED: 12/8/2017 11:24 AM

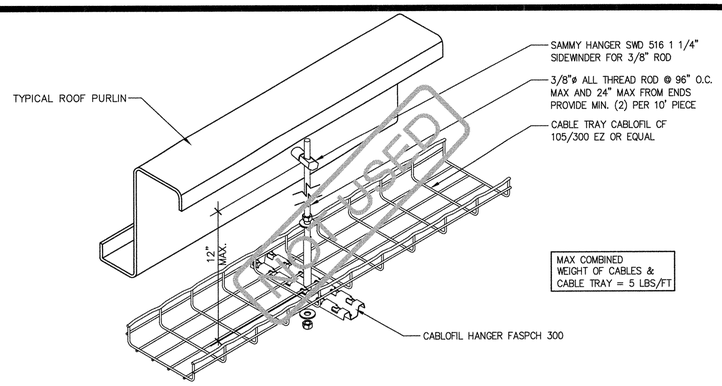

CABLE TRAY DETAIL

SCALE: N.T.S. | 1

NOT USED

2

LOAD PANEL CALCULATIONS

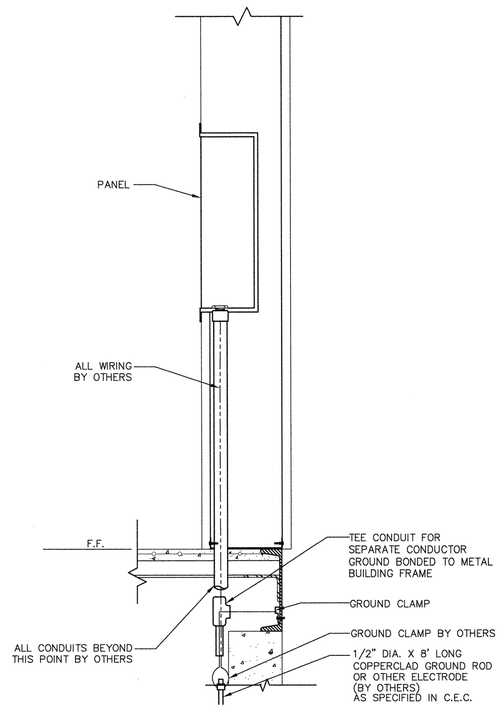

1. SIZE OF CONDUCTORS SHALL COMPLY W/CEC.A
2. BOND SEPARATE CONDUCTORS FROM GROUND ROD TO ELECTRICAL PANEL & METAL BUILDING FRAME (CEC). IN ADDITION TO THE DETAIL SHOWN ABOVE, BOND THE ELECTRICAL GROUND TO METAL WATER PIPE EMBEDDED AT LEAST 10' INTO THE SOIL IF AVAILABLE (CEC).
3. ELECTRICAL BOND MODULES TOGETHER W/#8 CU @ MODLINE. BY MANUFACTURER. CHECK RESISTANCE TO GROUND. IF RESISTANCE EXCEEDS 25 OHMS, INSTALL ADDITIONAL GROUND RODS (CEC) AS REQUIRED. GROUNDING DETAIL PER DSA IR E-1. INSPECTOR TO WITNESS GROUNDING TEST.

ELECTRICAL PANEL CONNECTION DETAIL - UNDERFLOOR OPTION

SCALE: 1-1/2" = 1' - 0" | 3

NOTE:
FIRE ALARM DEDICATED CIRCUIT SHALL BE IDENTIFIED WITH A RED MARKED DISCONNECT WITH LOCK-ON CAPABILITY (NFPA 72 10.6.5.2)

GENERAL NOTES

FIRE ALARM SYSTEM

1. THE FIRE ALARM SYSTEM SHALL CONFORM TO THE CALIFORNIA ELECTRICAL CODE, CALIFORNIA FIRE CODE AND THE CALIFORNIA BUILDING CODE.
2. INSTALLATION OF THE FIRE ALARM SYSTEM SHALL NOT BE STARTED UNTIL DETAILED PLANS AND SPECIFICATIONS, INCLUDING CALIFORNIA STATE FIRE MARSHAL LISTINGS FOR EACH COMPONENT OF THE SYSTEM, HAVE BEEN APPROVED BY DSA.
3. UPON COMPLETION OF THE INSTALLATION OF THE FIRE ALARM SYSTEM, A SATISFACTORY TEST OF THE ENTIRE SYSTEM SHALL BE MADE IN THE PRESENCE OF THE ENFORCING AGENCY.
4. JUNCTION BOXES – GALVANIZED SHEET METAL, SQUARE OR RECTANGULAR WITH BLANK COVERS. LOCATE ONE BOX AT REAR OF BUILDING NEAR MAIN ELECTRICAL PANEL @ +18" ABOVE FINISH FLOOR FOR FUTURE CONNECTION.
5. COVERS – INSTALL GASKETED, METAL, WATERPROOF, FINISH COVERS AT EXTERIOR LOCATIONS. INSTALL FINISH COVERS AT INTERIOR LOCATIONS.
6. THE AUTOMATIC ALARM SYSTEM SHALL BE INSTALLED, TESTED, AND MAINTAINED IN ACCORDANCE WITH THE STATE FIRE MARSHALL'S REGULATIONS (CBC SEC. 907.2.3) AND THE 2013 EDITION OF NFPA 72.
7. THE LOCATION OF AUTOMATIC DETECTORS, MANUAL STATIONS AND OTHER FIRE ALARM EQUIPMENT AND DEVICES, AS SHOWN ON PLAN, ARE FOR REFERENCE ONLY AND DO NOT CONSTITUTE SHOP DRAWINGS WHICH ARE REQUIRED FOR REVIEW AND APPROVAL.
8. ALARM-INDICATING DEVICES OF A FIRE ALARM SYSTEM INTENDED TO ALERT ALL OCCUPANTS SHALL CAUSE A LEVEL OF AUDIBILITY OF NOT LESS THAN 15 dBA ABOVE THE AVERAGE AMBIENT NOISE LEVELS OR 5dBA ABOVE THE MAXIMUM SOUND LEVEL HAVING A DURATION OF 60 SECONDS, WHICHEVER IS GREATER, MEASURED 5' ABOVE THE FLOOR. AMBIENT NOISE LEVELS MEANS THE LEVEL WHICH CAN NORMALLY BE EXPECTED WHEN THE FACILITY, BUILDING, ROOM, OR AREA IS FUNCTIONING UNDER NORMAL OPERATING OR WORKING CONDITIONS (NFPA 72, SEC. 18.4.1).
9. THE ALARM SYSTEM SHALL ACTIVATE A MEANS OF WARNING THE HEARING IMPAIRED. FLASHING VISUAL WARNINGS SHALL HAVE A FLASH RATE NOT EXCEEDING TWO FLASHES PER SECOND (2 HZ), NOR BE LESS THAN ONE FLASH EVERY SECOND (1 HZ). STROBE SIGNALING DEVICES FOR THE HEARING IMPAIRED SHALL BE STATE FIRE MARSHALL APPROVED AND LISTED (NFPA 72, SEC. 18.5.3).
10. AUTOMATIC FIRE ALARM SYSTEM SHALL TRANSMIT THE ALARM, SUPERVISORY AND TROUBLE SIGNALS TO AN APPROVED SUPERVISING STATION AS REQUIRED BY NFPA 72 CHAPTER 26 AS AMENDED BY ARTICLE 91. THE SUPERVISING STATION SHALL BE LISTED AS EITHER UUFX OR UUJS BY UNDERWRITERS LABORATORY OR SHALL MEET THE REQUIREMENTS OF FACTORY MUTUAL RESEARCH APPROVAL STANDARD 3011. SUPERVISION OF SYSTEM AND LEASED TELEPHONE LINES SHALL BE ARRANGED BY OWNER. IF TESTING RESULTS DETERMINE FIRE ALARM AUDIBILITY DOES NOT MEET 15db OVER AMBIENT NOISE LEVELS, ADDITIONAL FIRE ALARM SIGNALING DEVICES MAY BE REQUIRED BY THE ENFORCING AGENCY.

GENERAL NOTES

1. GROUNDING ELECTRODE CONDUCTOR SIZED PER CEC.
2. PROVIDE BONDS TO BLDG. STEEL & PANEL (#8 CU)
3. PANEL TO LISTED FOR USE AS SERVICE EQUIPMENT.

FIXTURE NOTES:

1. ALL FLUORESCENT LIGHT FIXTURES SHALL HAVE ENERGY SAVING LAMPS AND BALLASTS.
2. LUMINARIES/BALLASTS SHALL BE CERTIFIED PER CALIFORNIA BUILDING CODE, TITLE 24.
3. FLUORESCENT LIGHT FIXTURE TYPE "A" SHALL BE CONTROLLED TO PROVIDE TWO LEVELS OF LIGHTING. SWITCH (SA) SHALL CONTROL THE TWO OUTER LAMPS AND SWITCH (SB) SHALL CONTROL THE TWO INNER LAMPS.
4. ELECTRICAL SERVICE DROP AND CONNECTIONS SUPPLIED BY OTHERS.
5. MANUFACTURER TO PROVIDE STUB-OUT FROM BACK OF ELECTRICAL PANEL THROUGH THE EXTERIOR WALL OR TO BELOW FLOOR FOR RECEIVING EITHER UNDERGROUND OR OVERHEAD SERVICE & FITTING FOR GROUNDING CABLE.
6. ELECTRICAL PANEL BOARD SHALL BE RECESS MOUNTED INSIDE THE BUILDING, SIZED TO ACCOMMODATE ALL CONNECTED LOADS INCLUDING SPACES AS SHOWN. OVERCURRENT PROTECTIVE DEVICES IN THE PANEL BOARDS SHALL HAVE ADEQUATE SHORT CIRCUIT INTERRUPTING CAPACITY. ALL BUSES INCLUDING BUS SHALL BE COPPER OR ALUMINUM.
7. 2X4 FLUORESCENT FIXTURES SHALL HAVE A STEEL FRAME, LENS SHALL BE HINGED AND LOCKED IN PLACE BY TWO LOCKING DEVICES. THE LENS DIFFUSERS SHALL BE KHS, INC. #KSH-2, CAROLITE, INC. #C-12 OR PLASKOLITE, INC. #PL21A. MINIMUM LENS THICKNESS SHALL BE 0.125 INCHES.
8. FLUORESCENT BALLAST SHALL BE ENERGY SAVER WHILE MAINTAINING FULL LIGHT OUTPUT, CLASS "P" EQUIPPED WITH THERMAL PROTECTORS, GUARANTEED AGAINST FAILURE FOR (2) YEARS AND BE REPLACEABLE FROM INSIDE THE FIXTURE.
9. CLOCK – 12" DIAL CLOCK ON CLOCK OUTLET.
   A. CLOCK SHALL BE GENERAL ELECTRIC MODEL 2912 129V 60 CYCLE
   B. CLOCK OUTLET SHALL BE BRYANT #2828 OR EQUAL WITH SEPARABLE HANGING CLIP & APP'D RECEPT. THE H.V.A.C. UNIT FEEDER CIRCUIT – PANEL CIRCUIT BREAKER, FEEDER WIRE, UNIT DISCONNECT AND FUSES (WHERE USED) – IS TO BE COORDINATED WITH THE NAME PLATE DATA AT THE TIME OF MANUFACTURE. H.V.A.C. UNITS HAVING KVA RATINGS LARGER THAN THAT INDICATED ON THIS PANEL SCHEDULE WILL NOT BE ALLOWED TO BE INSTALLED ON THIS BUILDING.
   C. IF 60 DEGREES WIRE IS TO BE USED IN THIS INSTALLATION, CALCULATIONS DEMONSTRATING AMPACITY SHALL BE PROVIDED ON THE DRAWING.

GENERAL NOTES

American Modular Systems
787 Spreckels Ave. Manteca, CA 95336
Phone (209) 825-1921 - Fax (209) 825-7018
americanmodular.com

MODULAR MANUFACTURER PROPRIETARY STATEMENT
THESE DRAWINGS AND THE MATERIAL CONTAINED THEREIN ARE THE PROPERTY OF AMERICAN MODULAR SYSTEMS, INC. (AMS) AND SHALL NOT BE REPRODUCED, COPIED OR OTHERWISE DISPOSED OF DIRECTLY OR INDIRECTLY AND SHALL NOT BE USED IN WHOLE OR IN PART TO ASSIST IN THE MAKING OF OR FOR THE PURPOSE OF FURNISHING ANY INFORMATION FOR THE MAKING OF DRAWINGS, PRINTS, APPARATUS OR PARTS THEREOF WITHOUT THE FULL KNOWLEDGE AND WRITTEN CONSENT OF AMS. ALL PATENTABLE MATERIAL CONTAINED HEREIN AND ORIGINATING WITH AMS SHALL BE THE SOLE PROPERTY OF AMS.

PRE-CHECKED SET NAME
24' x 40' THRU 120' x 40' BUILDINGS

SITE SPECIFIC PROJECT NAME
MARIN COMMUNITY CSD - INDIAN VALLEY CAMPUS (1) 24x40 BUILDING

SHEET TITLE
ELECTRICAL NOTES & DETAILS

MANUFACTURER PROFESSIONAL OF RECORD ON PC
LICENSED ARCHITECT – TIMOTHY PATRICK CONNAUGHTON – No. C12631 – Ren. 3-31-19 – STATE OF CALIFORNIA

PROJECT SPECIFIC STATE AGENCY APPROVAL

STATE AGENCY APPROVAL
IDENTIFICATION STAMP DIV. OF THE STATE ARCHITECT
02 116135
AC TM FD
DATE 12-18-2017

BASED ON PC# 02-113876
PRE-CHECK (PC) DOCUMENT – CODE: 2013 CBC
A SEPARATE PROJECT APPLICATION FOR CONSTRUCTION IS REQUIRED

REVISIONS
1
2
3
4

DRAWN BY:	BA
SCALE:	AS NOTED
DATE:	11/10/17

SHEET NUMBER
E1.2

C:\...\E1.2 - ELECTRICAL NOTES & DETAILS.DWG - Saved: 12/4/2017 2:52 PM - By:BRIAN - 12/4/2017 2:52 PM

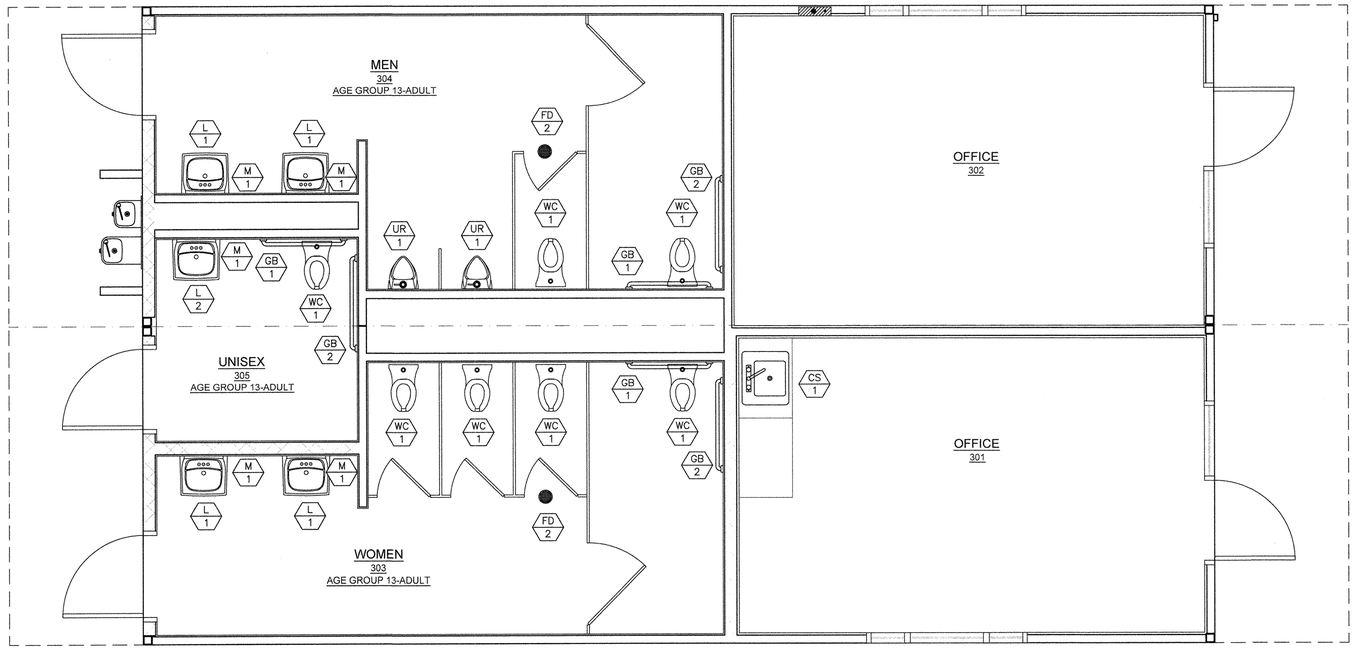

PLUMBING PLAN

SCALE: 3/8" = 1'-0" | 1

NOT USED

MARK	FIXTURE*	TYPE AT KINDERGARTEN	TYPE AT ELEMENTARY	TYPE AT ADULT	REMARKS
WC 1	WATER CLOSET	WALL MOUNT TYPE KOHLER 'KINGSTON' MODEL K-4325 OR EQUAL	WALL MOUNT TYPE KOHLER 'KINGSTON' MODEL K-4325 OR EQUAL	WALL MOUNT TYPE KOHLER 'KINGSTON' MODEL K-4325 OR EQUAL	FLUSH VALVE ZURN MODEL Z6000AV-HET 1.28gpf OR EQUAL. LOCATE AS SPECIFIED ON FLOOR PLANS. MOUNT ACCESSIBLE FIXTURES PER SCHEDULE 7/P2.0.
L 1	LAVATORY	AMERICAN STANDARD MODEL LUCERNE 0356.421 OR EQUAL	———	———	AMERICAN STANDARD AUTOMATIC SENSOR CONTROL LAVATORY FAUCET MODEL 6056.104 w/ NON-AERATING SPRAY @ 0.35 G/MIN, OR EQUAL. MOUNT AS SPECIFIED IN FLOOR PLANS. MOUNT ACCESSIBLE FIXTURES PER SCHEDULE 7/P2.0
UR 1	URINAL	WALL MOUNT TYPE AMERICAN STANDARD MODEL ALLBROOK 6541.132 OR EQUAL	———	———	FLUSH VALVE ZURN MODEL Z6003AV OR EQUAL. MOUNT AS SPECIFIED IN FLOOR PLANS. MOUNT ACCESSIBLE FIXTURES PER SCHEDULE 7/P2.0
M 1	MIRROR	WALL MOUNT TYPE BRADLEY MODEL 781-1830 OR EQUAL	———	———	MOUNT AS SPECIFIED IN FLOOR PLANS. MOUNT ACCESSIBLE MIRROR PER SCHEDULE 7/P2.0
GB 1 GB 2	36" GRAB BARS 42" GRAB BARS	WALL MOUNT TYPE CREATIVE SPECIALTIES INTERNATIONAL MODEL R7436 (1 1/4" EXPOSED SCREW 36" & 42") OR EQUAL	———	———	18 GA. 304 STAINLESS STEEL SATIN FINISH MOUNT AS SPECIFIED IN FLOOR PLANS AND PER SCHEDULE 7/P2.0 (STRUCTURAL STRENGTH OF GRAB BARS 250# MIN.)
FD 2	FLOOR DRAIN	CONCRETE FLOOR DRAIN ZURN MODEL Z415 w/ STANDARD GRATE ZURN Z400B OR EQUAL	———	———	LOCATE AS SPECIFIED ON FLOOR PLANS. (FLOOR DRAIN TO BE USED ON CONCRETE ONLY.) SEE 2/P2.0
CS 1	CLASSROOM SINK	TEKA SINGLE BOWL SINK MODEL America #25.22 OR EQUAL	———	———	LOCATE AS SPECIFIED ON FLOOR PLANS. MOUNT ACCESSIBLE FIXTURES PER SCHEDULE 7/P2.0
LS 2	LABORATORY SINK	DURCON INCORPORATED ADA MODEL - ADA25 SINGLE EPOXY BOWL SINK	———	———	FAUCET - CHICAGO LAB FAUCET MODEL 930-317XKCP LOCATE AS SPECIFIED ON FLOOR PLANS. MOUNT ACCESSIBLE FIXTURES PER SCHEDULE 7/P2.0
HB 2	HOSE BIBB	RECESSED HOSE BIBB WOODFORD MODEL B75CH ¾" WALL HYDRANT OR EQUAL	———	———	LOCATE AS SPECIFIED ON FLOOR PLANS.

*ALL WATER FIXTURES MUST MEET REQUIREMENTS OF CAL-GREEN TITLE 24, PART 11, SECTION 5.303.3 "WATER CONSERVING PLUMBING FIXTURES & SETTINGS".

PLUMBING FIXTURE SCHEDULE

American Modular Systems
787 Spreckels Ave. Manteca, CA 95336
Phone (209) 825-1921 - Fax (209) 825-7018
americanmodular.com

MODULAR MANUFACTURER PROPRIETARY STATEMENT

THESE DRAWINGS AND THE MATERIAL CONTAINED THEREIN ARE THE PROPERTY OF AMERICAN MODULAR SYSTEMS, INC. (AMS) AND SHALL NOT BE REPRODUCED, COPIED OR OTHERWISE DISPOSED OF DIRECTLY OR INDIRECTLY AND SHALL NOT BE USED IN WHOLE OR IN PART TO ASSIST IN THE MAKING OF OR FOR THE PURPOSE OF FURNISHING ANY INFORMATION FOR THE MAKING OF DRAWINGS, PRINTS, APPARATUS OR PARTS THEREOF WITHOUT THE FULL KNOWLEDGE AND WRITTEN CONSENT OF AMS. ALL PATENTABLE MATERIAL CONTAINED HEREIN AND ORIGINATING WITH AMS SHALL BE THE SOLE PROPERTY OF AMS.

PRE-CHECKED SET NAME

24' x 40' THRU 120' x 40' BUILDINGS

SITE SPECIFIC PROJECT NAME

MARIN COMMUNITY CSD - INDIAN VALLEY CAMPUS (1) 24x40 BUILDING

SHEET TITLE

PLUMBING PLAN

MANUFACTURER PROFESSIONAL OF RECORD ON PC

LICENSED ARCHITECT — TIMOTHY PATRICK MCNAMARA — No. C12631 Ren. 3-31-19 — STATE OF CALIFORNIA

REGISTERED PROFESSIONAL ENGINEER — JAMMY D. FINSCH — No. S3380 Exp: 03/31/16 — STATE OF CALIFORNIA

PROJECT SPECIFIC STATE AGENCY APPROVAL

STATE AGENCY APPROVAL

IDENTIFICATION STAMP DIV. OF THE STATE ARCHITECT
02 116495
AC TM
DATE 12-12-2017

BASED ON PC# 02-113876

PRE-CHECK (PC) DOCUMENT - CODE: 2013 CBC
A SEPARATE PROJECT APPLICATION FOR CONSTRUCTION IS REQUIRED

REVISIONS

1
2
3
4

DRAWN BY: BA
SCALE: AS NOTED
DATE: 11/10/17

SHEET NUMBER

P1.0

C:\USERS\...\24 x 40' ADA # OF POWDER ROOMS.RVT SAVED: 12/1/2017 4:43 PM PLOTTED: 12/1/2017 4:44 PM

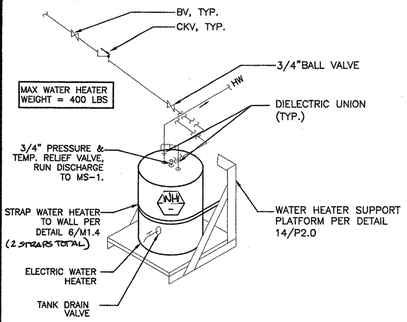

WATER HEATER SUPPORT DETAIL — SCALE : 3"=1'-0" — 1

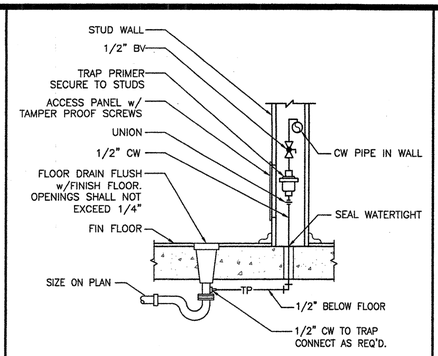

TRAP PRIMER DETAIL — SCALE : 3"=1'-0" — 2

NOTE:
INSULATE HOT WATER SUPPLY AND DRAIN PIPING AT ACCESSIBLE LAVATORIES WITH "TRUEBRO® LAV GUARD 2" OR "TRUEBRO® SOFT GUARD PLUS" SHIELDS

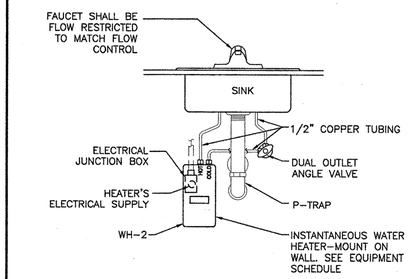

INSTANT WATER HEATER DETAIL — SCALE : 3"=1'-0" — 3

HEIGHTS FOR ACCESSIBLE FEATURES IN TOILET FACILITIES

	FIXTURE & MEASUREMENT POINT	AGES 3-4	AGES 5-8	AGES 9-12	AGES 13 -ADULT	NOTES
A	TOILET, CENTERLINE FROM FACE OF WALL	12" SUGGESTED	12" TO 15" SUGGESTED	15" TO 18" SUGGESTED	17" MIN. TO 18" MAX.	
B	TOILET, TOP OF SEAT HEIGHT	11" TO 12" SUGGESTED	12" TO 15" SUGGESTED	15" TO 17" SUGGESTED	17" MIN. TO 19" MAX.	
C	TOILET, TOP OF FLUSH CONTROLS	35" MAX.	36" MAX.	36" MAX.	44" MAX.	FLUSH CONTROLS SHALL BE LOCATED ON OPEN SIDE OF TOILET.
D	GRAB BAR, TOP OF BAR	18" TO 20" SUGGESTED	20" TO 25" SUGGESTED	25" TO 27" SUGGESTED	33" MIN. TO 36" MAX.	
E	TOILET PAPER DISPENSER, HEIGHT TO OUTLET	14" SUGGESTED	14" TO 17" SUGGESTED	17" TO 19" SUGGESTED	19" MIN.	CENTERLINE OF DISPENSER OUTLET SHALL BE BETWEEN 7" TO 9" IN FRONT OF THE TOILET. OUTLET OF DISPENSER MUST BE BELOW GRAB BAR. DISPENSER (INCLUDING FULL TOILET PAPER ROLL) MUST NOT ENCROACH INTO REQ'D GRAB BAR CLEARANCE.
F	TOILET SEAT COVER, HEIGHT TO TOP OF OUTLET	24" TO 32" SUGGESTED	30" TO 32" SUGGESTED	32" TO 36" SUGGESTED	40" MAX.	
G	URINAL, LIP HEIGHT	12" TO 13" SUGGESTED	13" TO 15" SUGGESTED	15" TO 17" SUGGESTED	17" MAX.	
H	URINAL, HEIGHT OF FLUSH HANDLE	36" MAX.	36" MAX.	36" MAX.	44" MAX.	
I	LAVATORY, HEIGHT TO HIGHEST POINT AT FRONT OF LAV. OR COUNTER	24" TO 28" SUGGESTED	31" MAX.	31" MAX.	34" MAX.	
J	LAVATORY, VERTICAL KNEE CLEARANCE		24" MIN.	24" MIN.	29"-27" OVER THE 8" DEPTH SHOWN	
K	MIRROR (ABOVE LAVATORY OR COUNTERTOP), LOWEST POINT OF REFLECTIVE SURFACE	24" TO 32" SUGGESTED	30" TO 32" SUGGESTED	32" TO 36" SUGGESTED	40" MAX.	MIRROR NOT LOCATED ABOVE LAVATORY OR COUNTERTOP SHALL BE MOUNTED SO THAT LOWEST EDGE OF REFLECTING SURFACE IS 35" MAX. ABOVE FINISH FLOOR.
L	DISPENSERS, DRYERS, HEIGHT TO TOP OF OUTLET, HANDLE OR OPERATING MECHANISM (WHICHEVER IS HIGHEST)	24" TO 32" SUGGESTED	30" TO 32" SUGGESTED	32" TO 36" SUGGESTED	40" MAX	
M	LO DRINKING FOUNTAIN, HEIGHT TO BUBBLER	24" TO 30" SUGGESTED	30" TO 32" SUGGESTED	32" TO 36" SUGGESTED	36" MAX.	
N	HI DRINKING FOUNTAIN, HEIGHT TO BUBBLER	→	→	→	38" MIN. TO 43" MAX.	

NOTES:
1. THIS TABLE AND RELATED DIAGRAMS ILLUSTRATE THE SPECIFIC REQUIREMENTS OF CALIF. TITLE 24 (2013 C.B.C. SECTION 11B-601) AND IS SHOWN HERE ONLY AS AN AID FOR CONSTRUCTION AND INSTALLATION.
2. ACCESSORIES ARE NOT IN MANUFACTURER'S SCOPE OF WORK.
3. DIMENSIONS GIVEN ARE FROM FINISH FLOOR, UNLESS OTHERWISE NOTED.
4. NOT ALL ITEMS LISTED MAY OCCUR IN THE PROJECT.

ACCESSIBLE HEIGHTS — N.T.S. — 7

NOTE: DIMENSION LETTERS REFER TO TABLE IN DETAIL 7.

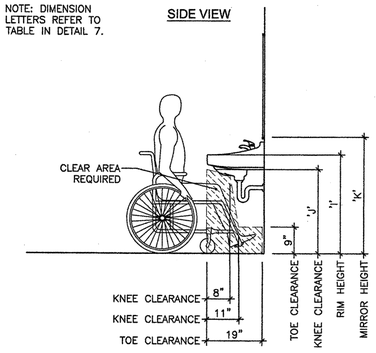

LAVATORY CLEARANCES — SCALE: 1/2" = 1'-0" — 4

NOTE:
ALL DRINKING FOUNTAINS SHALL BE LOCATED COMPLETELY WITHIN ALCOVES, BETWEEN WING WALLS, OR OTHERWISE POSITIONED SO AS NOT TO ENCROACH INTO PEDESTRIAN WAYS (PER C.B.C. SECTION 11B-602.9), AND SHALL BE APPROACHABLE PER SECTION 11B-305.6 AND HAVE MANEUVERING CLEARANCES PER SECTION 11B-305.7.

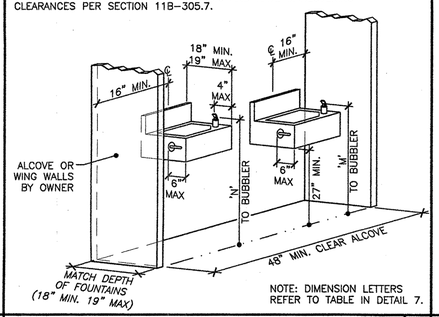

NOTE: DIMENSION LETTERS REFER TO TABLE IN DETAIL 7.

HI-LO DRINKING FOUNTAIN — N.T.S. — 5

NOTES:
1. MODIFY BASE AS SHOWN FOR ADULT WHEELCHAIR ACCESS.
2. CABINET IS FOR ADULT USE ONLY.
3. ALL EXTERIOR SURFACES TO BE PLASTIC LAMINATE.
4. CABINET DOORS ARE NOT ALLOWED @ SINKS.

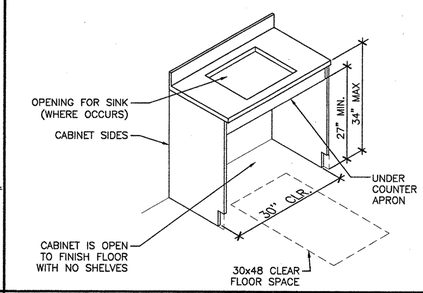

ACCESSIBLE CABINET ELEVATION — N.T.S. — 6

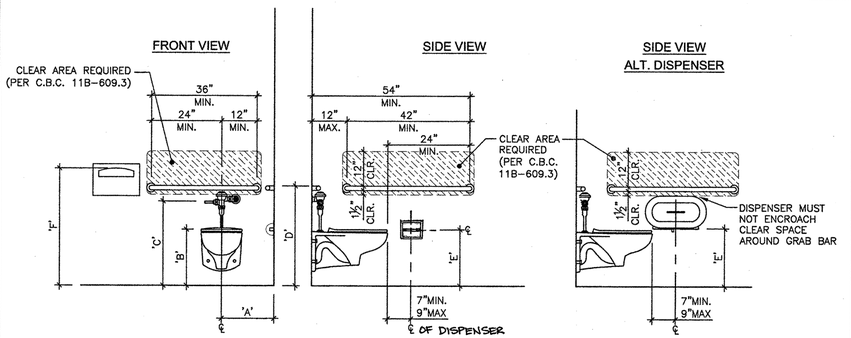

NOTE: DIMENSION LETTERS REFER TO TABLE IN DETAIL 7.

ACCESSIBLE TOILET AND ACCESSORIES — SCALE: 1/2" = 1'-0" — 11

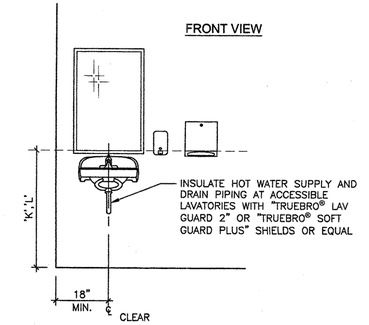

NOTE: DIMENSION LETTERS REFER TO TABLE IN DETAIL 7.

LAVATORY & ACCESSORIES — SCALE: 1/2" = 1'-0" — 12

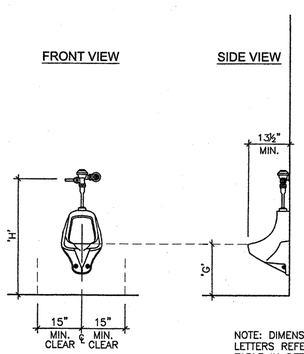

NOTE: DIMENSION LETTERS REFER TO TABLE IN DETAIL 7.

ACCESSIBLE URINAL — SCALE: 1/2" = 1'-0" — 13

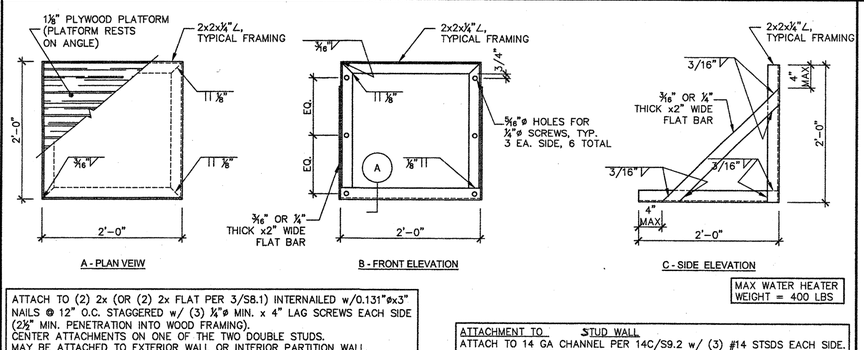

ATTACH TO (2) 2x (OR (2) 2x FLAT PER 3/S8.1) INTERNAILED w/0.131"øx3" NAILS @ 12" O.C. STAGGERED w/ (3) ¾"ø MIN. x 4" LAG SCREWS EACH SIDE (2½" MIN. PENETRATION INTO WOOD FRAMING).
CENTER ATTACHMENTS ON ONE OF THE TWO DOUBLE STUDS.
MAY BE ATTACHED TO EXTERIOR WALL OR INTERIOR PARTITION WALL.

MAX WATER HEATER WEIGHT = 400 LBS

ATTACHMENT TO STUD WALL
ATTACH TO 14 GA CHANNEL PER 14C/S9.2 w/ (3) #14 STSDS EACH SIDE.
MAY BE ATTACHED TO EXTERIOR WALL OR INTERIOR PARTITION WALL.

WATER HEATER PLATFORM DETAIL — SCALE: 1" = 1'-0" — 14

1. DWV PIPING SHALL BE ABS PLASTIC
2. COLD WATER SUPPLY SHALL BE TYPE L COPPER
3. MIN SLOPE 1/4" PER FOOT MAY SLOPE 4" CI AT 1/8" PER FOOT VENTS SHALL TERMINATE NOT LESS THAN 10 FEET FROM OR AT LEAST 3 FT. ABOVE ANY WINDOW, DOOR, AIR INTAKE OR VENT SHAFT, NOR LESS THAN 3FT. IN EVERY DIRECTION FROM ANY LOT LINE; ALLEY AND STREET EXCEPTED; EXTEND 6" ABOVE THE ROOF

GENERAL NOTES

NOT USED — 8

NOT USED — 9

NOT USED — 14

American Modular Systems
787 Spreckels Ave. Manteca, CA 95336
Phone (209) 825-1921 - Fax (209) 825-7018
americanmodular.com

MODULAR MANUFACTURER PROPRIETARY STATEMENT
THESE DRAWINGS AND THE MATERIAL CONTAINED THEREIN ARE THE PROPERTY OF AMERICAN MODULAR SYSTEMS, INC. (AMS) AND SHALL NOT BE REPRODUCED, COPIED OR OTHERWISE DISPOSED OF DIRECTLY OR INDIRECTLY AND SHALL NOT BE USED IN WHOLE OR IN PART TO ASSIST IN THE MAKING OF OR FOR THE PURPOSE OF FURNISHING ANY INFORMATION FOR THE MAKING OF DRAWINGS, PRINTS, APPARATUS OR PARTS THEREOF WITHOUT THE FULL KNOWLEDGE AND WRITTEN CONSENT OF AMS. ALL PATENTABLE MATERIAL CONTAINED HEREIN AND ORIGINATING WITH AMS SHALL BE THE SOLE PROPERTY OF AMS.

PRE-CHECKED SET NAME

24' x 40' THRU 120' x 40' BUILDINGS

SITE SPECIFIC PROJECT NAME

SHEET TITLE

PLUMBING DETAILS AND ACCESSIBLE DETAILS

MANUFACTURER PROFESSIONAL OF RECORD ON PC

LICENSED ARCHITECT RANDALL PATRICK CANNON No. C12631 Ren. 03-31-17 STATE OF CALIFORNIA

PROJECT SPECIFIC STATE AGENCY APPROVAL

IDENTIFICATION STAMP DIV. OF THE STATE ARCHITECT
02 116495
AC TM FIRE
DATE 12-18-2017

ORIGINAL PC STATE AGENCY APPROVAL

IDENTIFICATION STAMP DIV. OF THE STATE ARCHITECT CA. DEPT. OF GENERAL SERVICES
PC 02-113876
AC FLS
DATE 6/22/17

PRE-CHECK (PC) DOCUMENT – CODE: 2013 CBC
A SEPARATE PROJECT APPLICATION FOR CONSTRUCTION IS REQUIRED

REVISIONS
1
2
3
4

DRAWN BY:
SCALE: AS NOTED
DATE:

SHEET NUMBER

P2.0

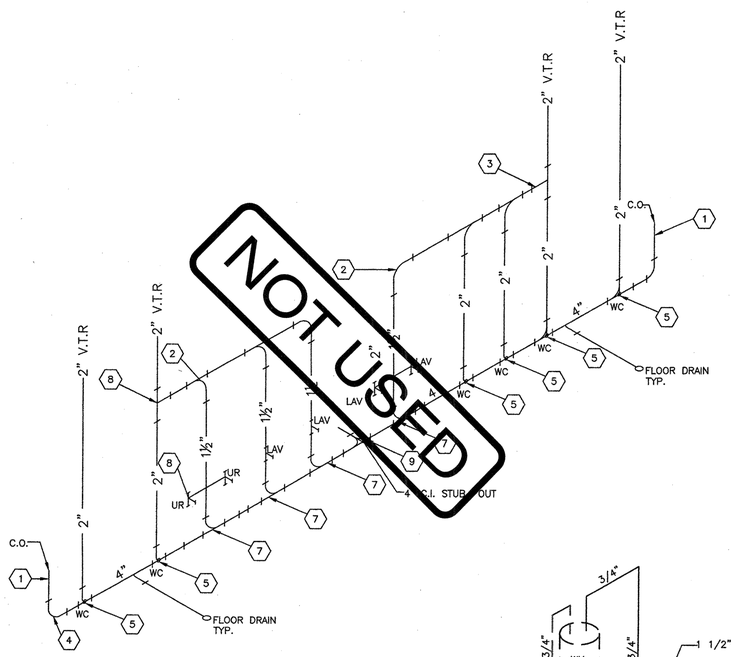

WASTE ISOMETRIC
SCALE : NTS BOYS & GIRLS

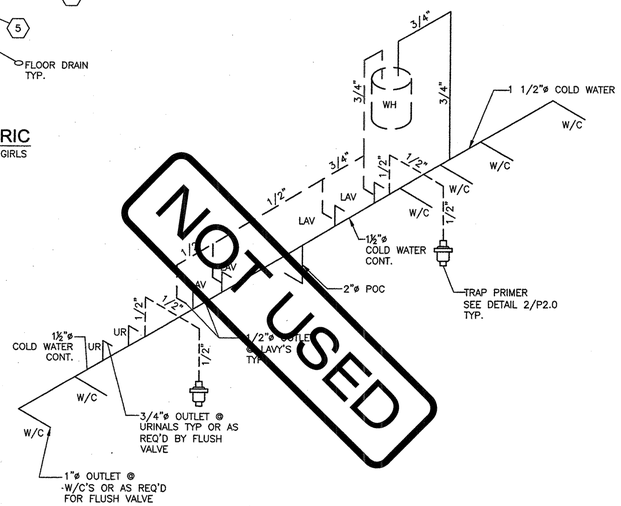

WATER SUPPLY ISOMETRIC
SCALE : NTS BOYS & GIRLS

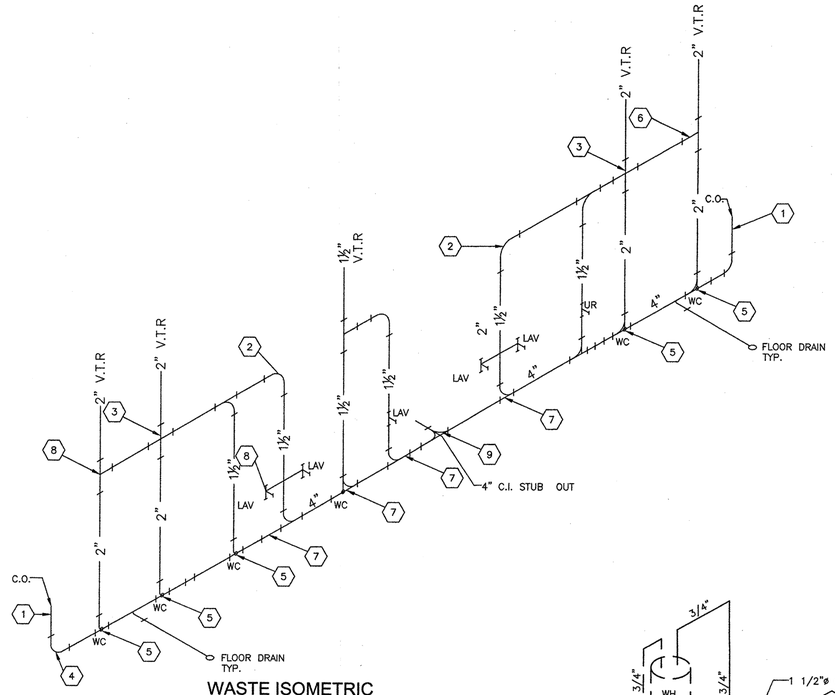

WASTE ISOMETRIC
SCALE : NTS BOYS, GIRLS & STAFF

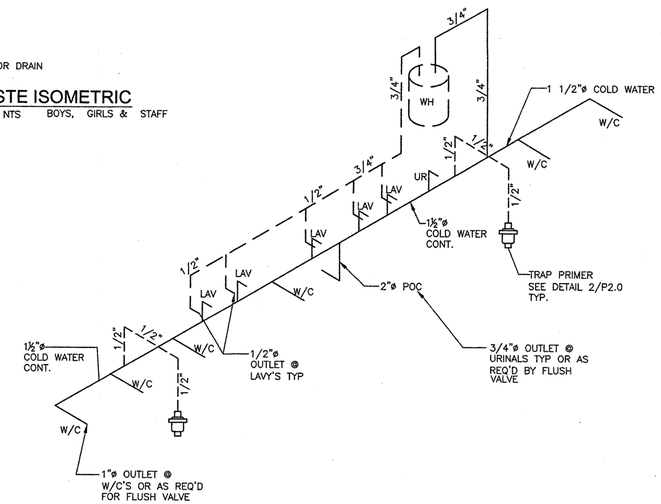

WATER SUPPLY ISOMETRIC
SCALE : NTS BOYS, GIRLS & STAFF

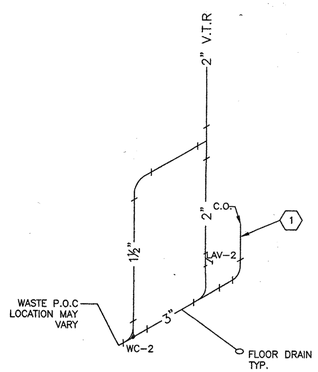

WASTE ISOMETRIC
SCALE : NTS SINGLE TOILET OPTION

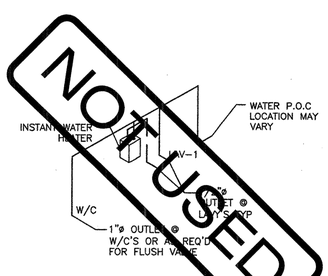

WATER SUPPLY ISOMETRIC
SCALE : NTS SINGLE TOILET OPTION

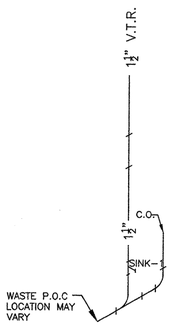

WASTE ISOMETRIC
SCALE : NTS CLASSROOM SINK OPTION

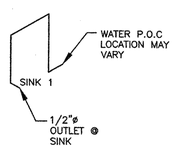

WATER SUPPLY ISOMETRIC
SCALE : NTS CLASSROOM SINK OPTION

KEY NOTES

1. 4" CLEAN OUT
2. VENT 90
3. VENT CROSS
4. 4" QUARTER BEND
5. SMITH#0600 CARRIER
6. 2" SANITARY TAP TEE
7. 4x4x2 COMBINATION WYE 1/8 BEND
8. 2x2x1 1/2 SANITARY TEE
9. 4" DOUBLE COMBINATION
10. 2"x18" LONG CU AIR CHAMBER
11. 1" CW STUB AT WATER CLOSETS
12. 3/4" CW STUB AT URINALS
13. 1/2 CW STUB AT LAVATORIES

AMS
American Modular Systems
787 Spreckels Ave.Manteca, CA 95336
Phone (209) 825-1921 - Fax (209) 825-7018
americanmodular.com

MODULAR MANUFACTURER PROPRIETARY STATEMENT

THESE DRAWINGS AND THE MATERIAL CONTAINED THEREIN ARE THE PROPERTY OF AMERICAN MODULAR SYSTEMS, INC. (AMS) AND SHALL NOT BE REPRODUCED, COPIED OR OTHERWISE DISPOSED OF DIRECTLY OR INDIRECTLY AND SHALL NOT BE USED IN WHOLE OR IN PART TO ASSIST IN THE MAKING OF OR FOR THE PURPOSE OF FURNISHING ANY INFORMATION FOR THE MAKING OF DRAWINGS, PRINTS, APPARATUS OR PARTS THEREOF WITHOUT THE FULL KNOWLEDGE AND WRITTEN CONSENT OF AMS. ALL PATENTABLE MATERIAL CONTAINED HEREIN AND ORIGINATING WITH AMS SHALL BE THE SOLE PROPERTY OF AMS.

PRE-CHECKED SET NAME

24' x 40' THRU 120' x 40' BUILDINGS

SITE SPECIFIC PROJECT NAME

SHEET TITLE

PLUMBING ISOMETRICS

MANUFACTURER PROFESSIONAL OF RECORD ON PC

LICENSED ARCHITECT RANDALL PATRICK SWANSON No. C12631 Ren. 3-31-17 STATE OF CALIFORNIA

PROJECT SPECIFIC STATE AGENCY APPROVAL

IDENTIFICATION STAMP DIV. OF THE STATE ARCHITECT
OS 116495
AC BM
DATE 12-18-2017

ORIGINAL PC STATE AGENCY APPROVAL

IDENTIFICATION STAMP DIV. OF THE STATE ARCHITECT CA. DEPT. OF GENERAL SERVICES
PC 02-113876
AC
DATE 6/22/15

PRE-CHECK (PC) DOCUMENT - CODE: 2013 CBC
A SEPARATE PROJECT APPLICATION FOR CONSTRUCTION IS REQUIRED

REVISIONS

DRAWN BY:
SCALE: AS NOTED
DATE:

SHEET NUMBER

P3.0

END OF PROJECT MANUAL